(12) UK Patent Application (19) GB (11) 2 372 434 (13) A

(43) Date of A Publication 28.08.2002

(21) Application No 0109402.8

(22) Date of Filing 12.04.2001

(30) Priority Data
(31) 0104680 (32) 24.02.2001 (33) GB

(71) Applicant(s)
Dyson Limited
(Incorporated in the United Kingdom)
Tetbury Hill, MALMESBURY, Wiltshire, SN16 0RP, United Kingdom

(72) Inventor(s)
Stephen Paul Organ

(74) Agent and/or Address for Service
Gillian R Smith
Dyson Research Limited, Intellectual Property Department, Tetbury Hill, MALMESBURY, Wiltshire, SN16 0RP, United Kingdom

(51) INT CL^7
A47L 9/16 9/20

(52) UK CL (Edition T)
A4F FFD FSCA

(56) Documents Cited
EP 1023864 A2

(58) Field of Search
UK CL (Edition S) **A4F , B2P**
INT CL^7 **A47L 9/16 9/20**
Online: WPI, EPODOC, PAJ

(54) Abstract Title
Removable collecting chamber in a bagless vacuum cleaner

(57) In a bagless vacuum cleaner, eg of the cyclone type, the separating apparatus, which may comprise a series of cyclones 240, includes a dirt collecting chamber 205 which has a door 210 at its base which can be opened to empty the chamber by means of a remote trigger 222 and associated linkage 230 and latch 260. The chamber is also separable from the separating apparatus for thorough cleaning, and is released by means of catch 295 and detent 296 where is connects with the lower end of the cyclone assembly. The arrangement is characterised in that the chamber cannot be removed unless the door 210 is open, by virtue of the fact that the latch for the door is hooked and is attached to the cyclone assembly. Thus the chamber must be emptied before detachment, thus obviating inadvertent opening of the door after it has been removed and is being handled for cleaning.

Fig. 3

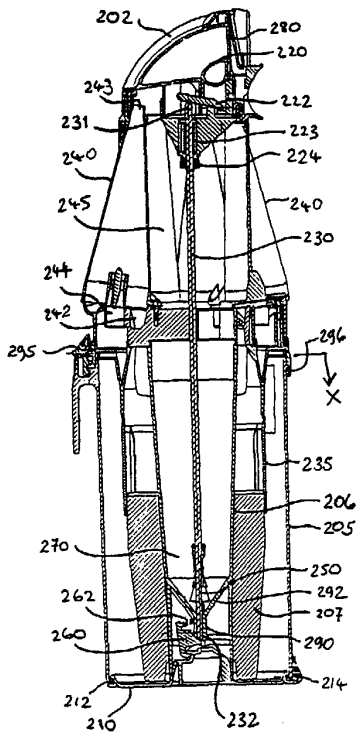

GB 2 372 434 A

FIG. 1.

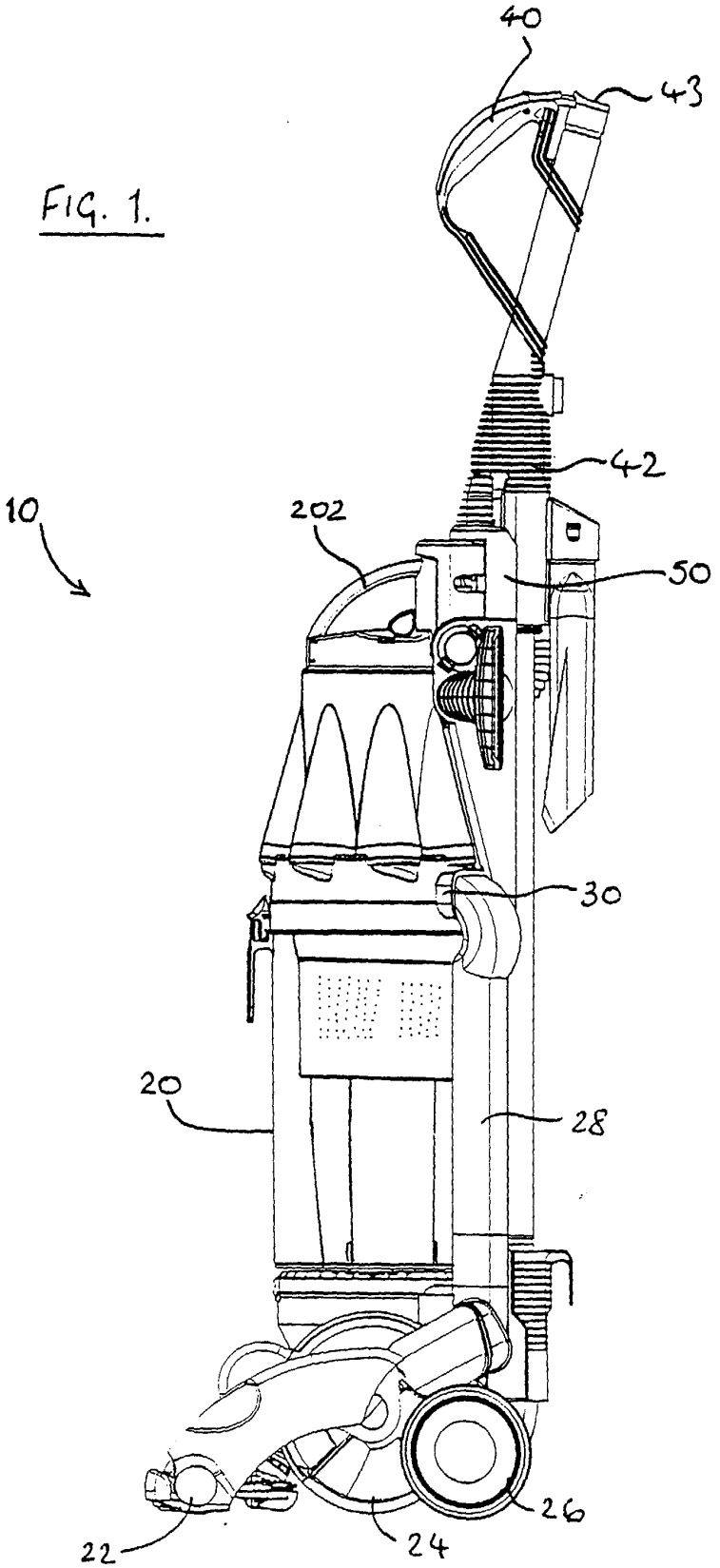

FIG. 2

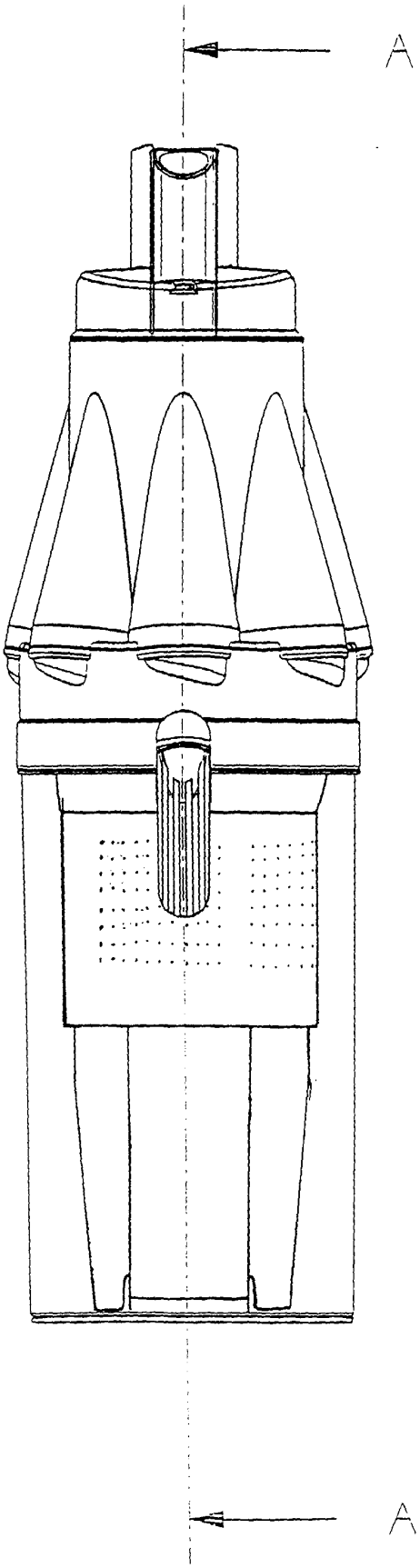
A
A

FIG. 3

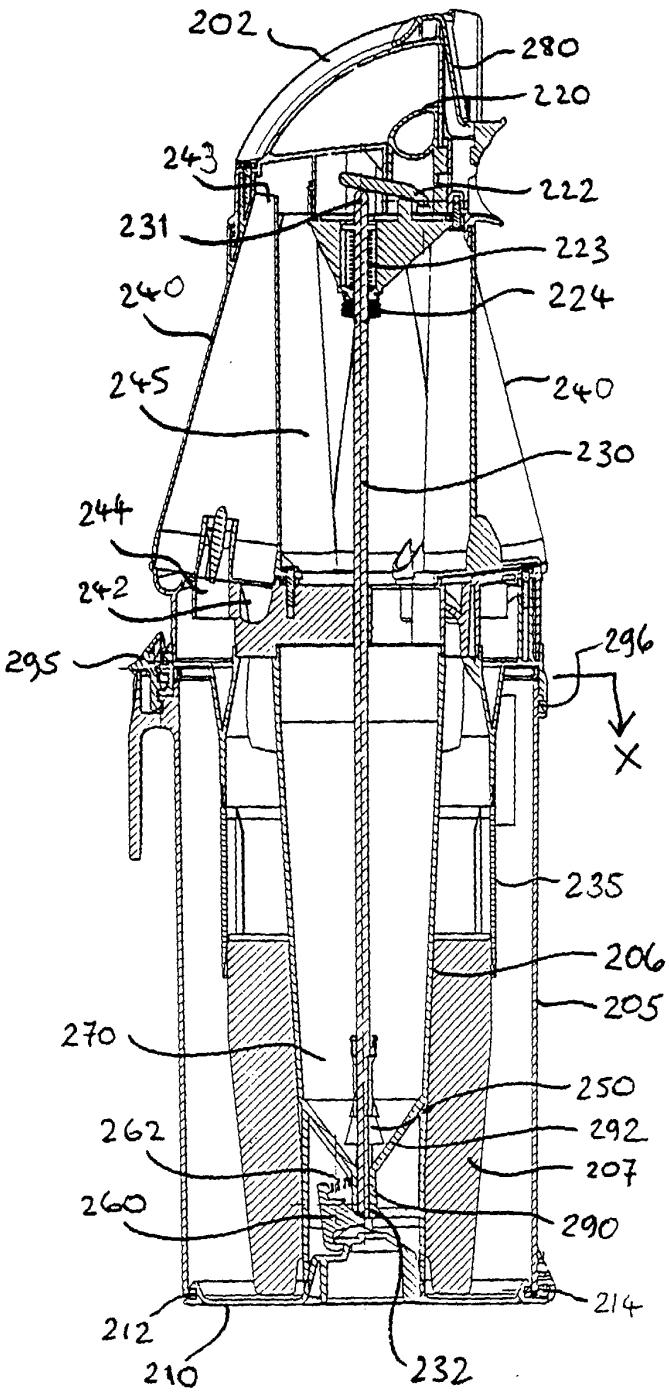
202
280
220
243
222
231
223
240
224
245
240
230
244
242
295
296
X
235
206
205
270
250
262
292
207
260
290
214
212
210
232

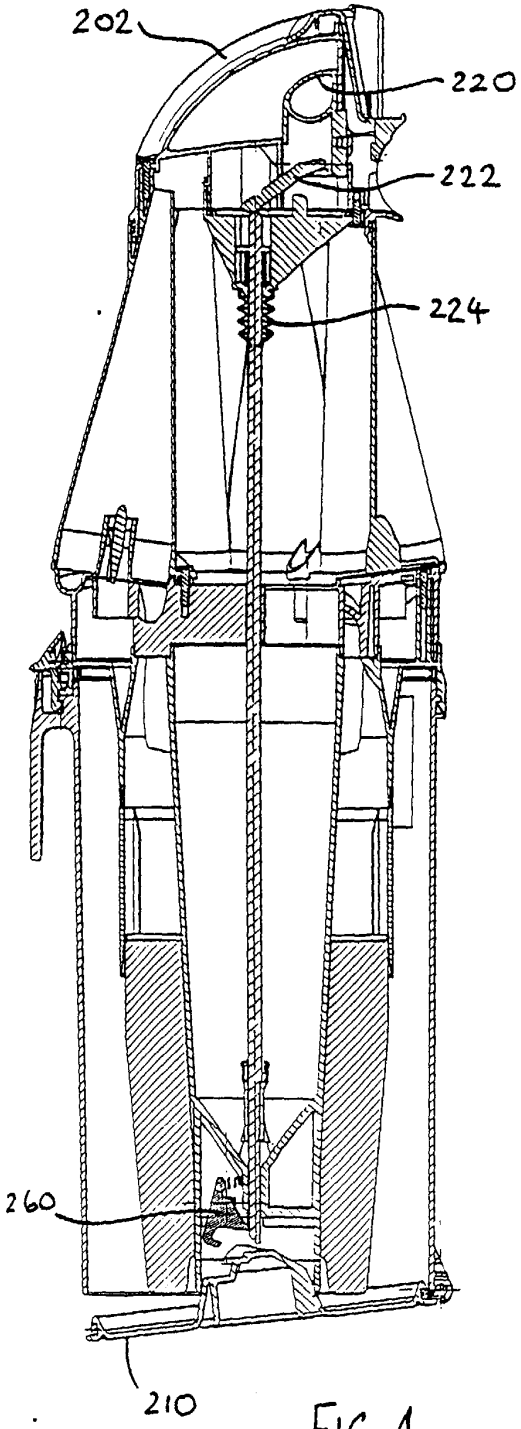

FIG. 4

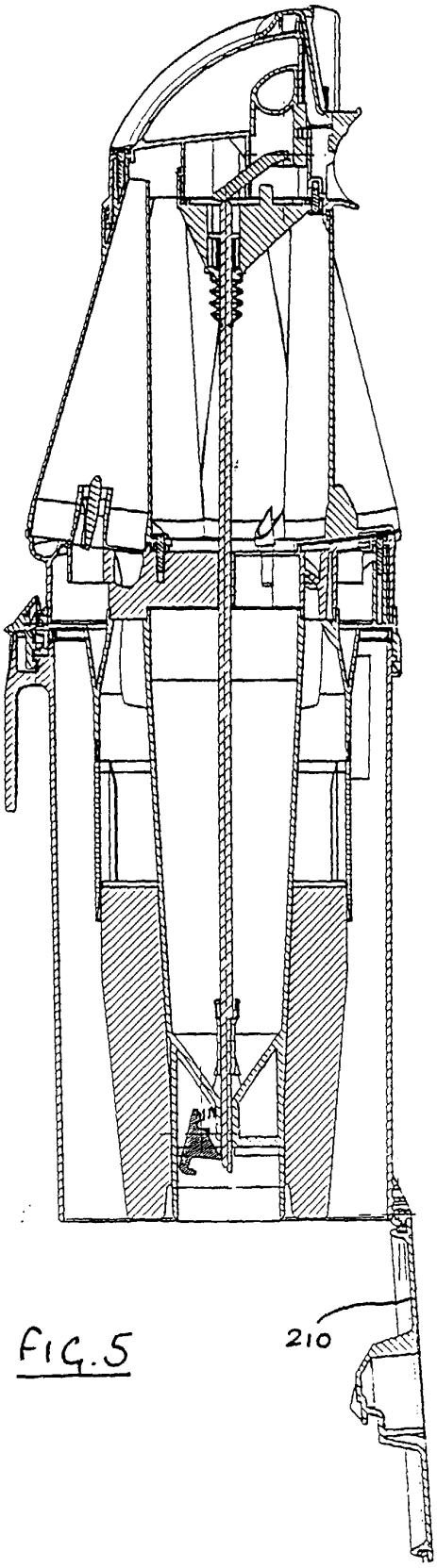

FIG. 5

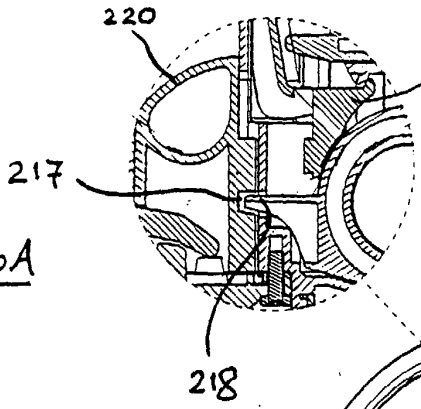

FIG. 6A

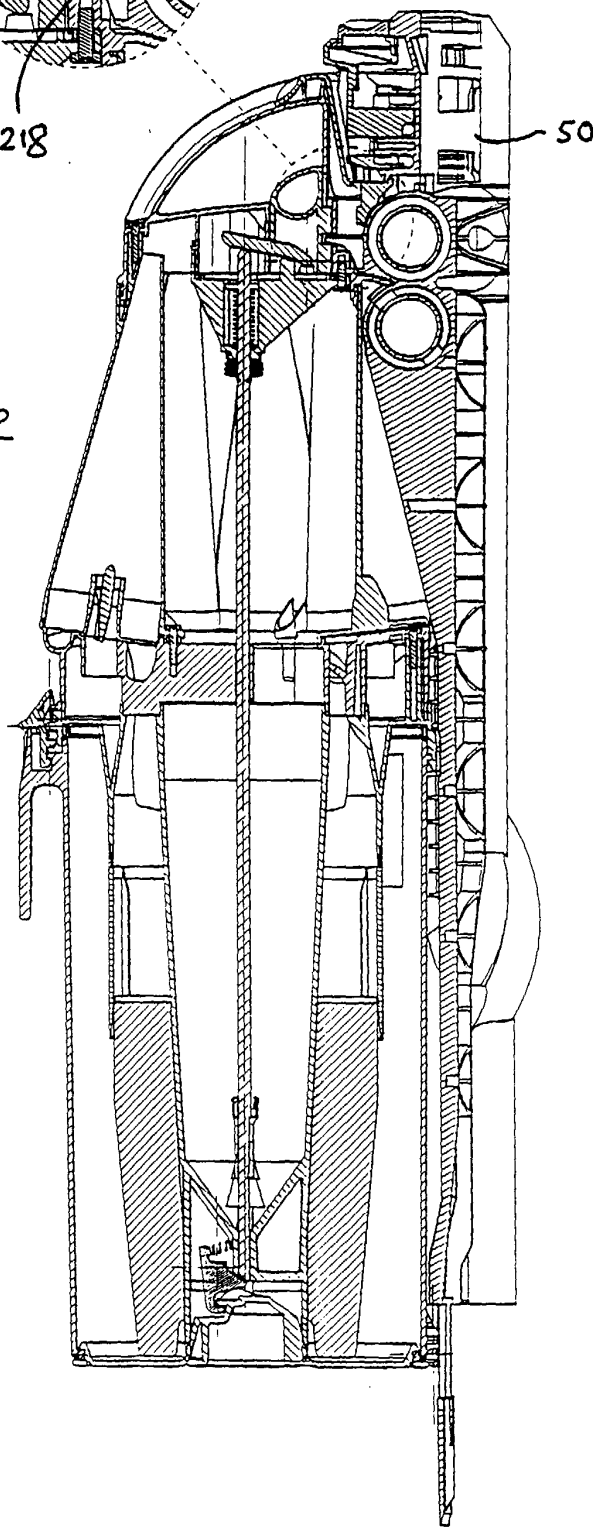

FIG. 6

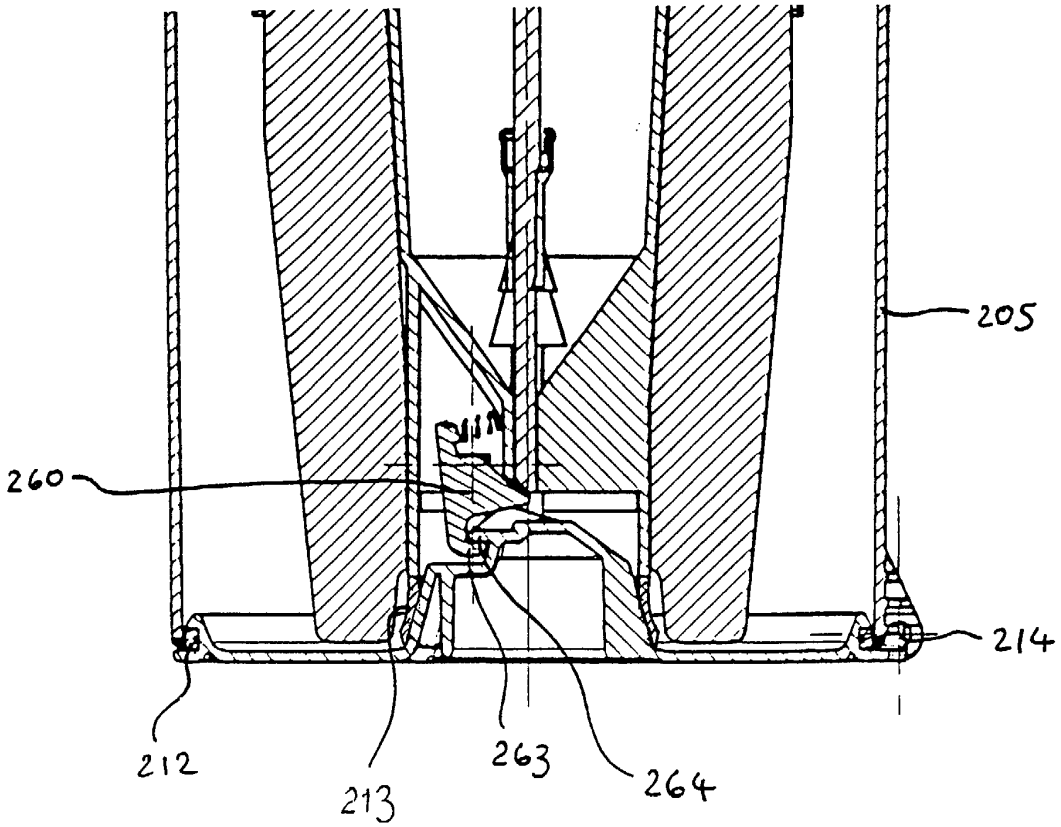

FIG. 7

FIG. 8

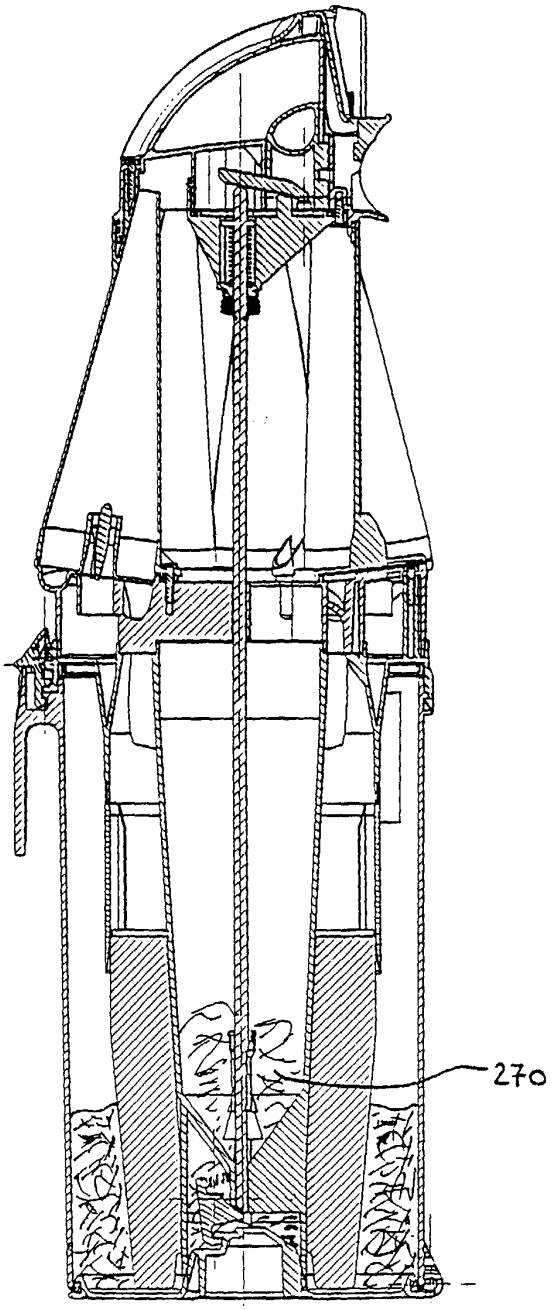

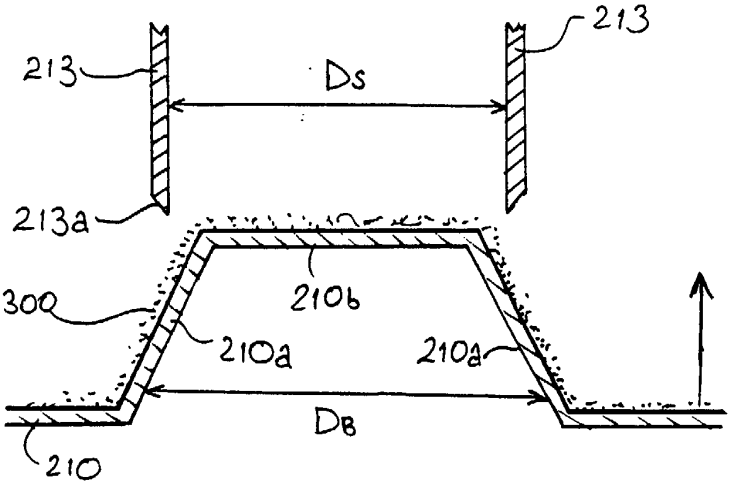

FIG. 9A

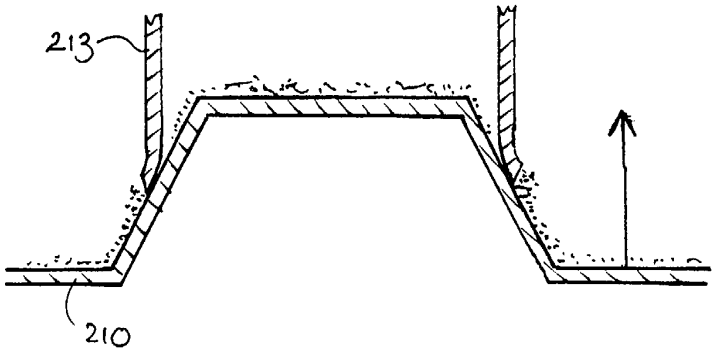

FIG. 9B

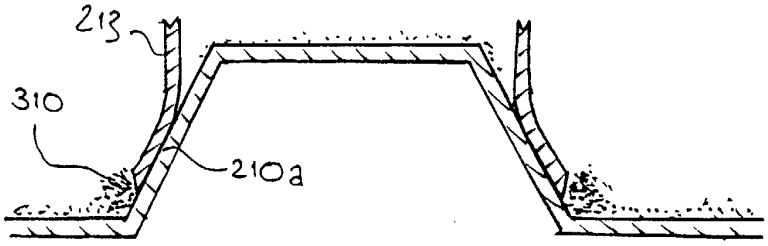

FIG. 9C

A Separating Apparatus for a Vacuum Cleaner

This invention relates to a separating apparatus for a bagless vacuum cleaner and to a vacuum cleaner which incorporates the separating apparatus.

Vacuum cleaners which separate dirt and dust from an airflow without the use of a filter bag, so-called bagless vacuum cleaners, are becoming increasingly popular. Most bagless cleaners use cyclonic or centrifugal separation to spin dirt and dust from the airflow. By avoiding the use of a filter bag as the primary form of separation, it has been found possible to maintain a consistently high level of suction, even as the collecting chamber fills with dirt.

The principle of cyclonic separation in domestic vacuum cleaners is described in a number of publications including EP 0 042 723. In general, an airflow in which dirt and dust is entrained enters a first cyclonic separator via a tangential inlet which causes the airflow to follow a spiral or helical path within a collection chamber so that the dirt and dust is separated from the airflow. Relatively clean air passes out of the chamber whilst the separated dirt and dust is collected therein. In some applications, and as described in EP 0 042 723, the airflow is then passed to a second cyclone separator which is capable of separating finer dirt and dust than the upstream cyclone. The airflow is thereby cleaned to a greater degree so that, by the time the airflow exits the cyclonic separating apparatus, the airflow is almost completely free of dirt and dust particles.

While bagless vacuum cleaners are successful in maintaining a consistently high level of suction, the absence of a bag can make it difficult to dispose of the dirt and dust which is collected by the cleaner. When the separating chamber of a bagless cleaner becomes full, a user typically removes the collecting chamber from the chassis of the machine, carries the chamber to a dust bin or refuse sack and tips the chamber upside down. Often dirt and dust is densely packed inside the collecting chamber and it may

be necessary for a user to manually dislodge the dirt by reaching into the chamber and pulling at the collected mass of dust and fibres, or to shake or bang the collecting chamber against the side of a dustbin. In some cases, this can cause a fair amount of mess.

Some solutions to this problem have been proposed. US 5,090,976 describes the use of a disposable liner which can be fitted inside the cyclonic separating chamber. When the liner is full, the liner is lifted out of the chamber and disposed of. WO 98/10691 describes a cyclonic collection chamber where a bag is retained, in a collapsed state, in the base of the collection chamber. When the collection chamber is full, the base is unscrewed from the chamber so that the bag can extend downwardly from the base. Dirt and dust slides out of the collecting chamber into the bag and the bag can then be sealed and separated from the collecting chamber for disposal. Both of these solutions have a disadvantage in that they require a user to keep a supply of spare bases or liners, which adds to the cost of maintaining the machine.

EP 1 023 864 describes a dust-collecting device for a cyclonic vacuum cleaner. The dust-collecting chamber can be removed from the chassis of the cleaner for emptying. A bottom lid of the dust-collecting chamber is attached by way of a hinge to the remainder of the chamber and the lid can be released by pressing a release button. A ribbed cylindrical filter is fitted inside the dust-collecting chamber and is rotatable within the chamber to encourage the release of dirt which is stored in the chamber. One embodiment of EP 1 023 864 describes how a release lever for releasing the bottom lid can be located remotely from the lid, as part of the grip for the chamber.

It is desirable to provide a lid release control which is located remotely from the lid itself as a user is spaced from dirt and dust when the chamber is emptied. However, remotely locating the lid release control complicates the linking mechanism for releasing the lid. The linking mechanism is complicated still further if it is desired to allow the collecting chamber to be separated from another part of the separating

apparatus. The collecting chamber may occasionally need to be removed for thorough cleaning or to remove debris which has become trapped within the collecting chamber.

Thus, the present invention seeks to provide a collecting chamber for a bagless vacuum cleaner which minimises this disadvantage.

Accordingly, a first aspect of the present invention provides a separating apparatus for a bagless vacuum cleaner comprising an air inlet for receiving a dirt-laden airflow, an air outlet, a collecting chamber for collecting, in use, dirt and dust which has been separated from the airflow, the collecting chamber being separable from the remainder of the apparatus, and wherein part of the collecting chamber wall is a closure member which is movable between a closed position in which the closure member seals the collecting chamber and an open position in which dirt and dust can escape from the collecting chamber, the apparatus further comprising releasing means for releasing the closure member from the closed position, the releasing means comprising a manually operable actuating member which is located on a part of the apparatus which is remote from the collecting chamber, and wherein the apparatus is arranged such that the collecting chamber is not separable from the remainder of the apparatus until the closure member is in the open position.

This has the advantage that a user cannot accidentally open the closure member and deposit dust on the floor if they decide to remove the collecting chamber from the remainder of the apparatus. A user must first release the closure member to deposit the dust, in the usual manner that they will be conditioned to doing, before separating the collecting chamber from the remainder of the apparatus.

Preferably the releasing means forms part of the remainder of the apparatus and the direction in which the collection chamber is separable from the apparatus is opposite to the direction of the retaining force exerted by the releasing means on the closure member. This can be achieved by providing the releasing means with a catch which engages with a hook on the closure member.

The term 'bagless' is intended to cover a broad range of vacuum cleaners which have a reusable collecting chamber, and includes, inter alia, cleaners which separate dirt and dust by way of cyclonic, centrifugal or inertial separation.

It is convenient for the actuating member to be located adjacent a handle for carrying the separating apparatus. This allows a user to carry and empty the apparatus with one hand.

Preferably agitating means are provided for agitating dirt held within the collection area, the agitating means being operable by the actuating member. This helps to dislodge any dirt that may have become 'stuck' in the collection area. Also, a user does not need to separately operate the releasing and the agitating means.

Preferably the closure member is pivotably fixed to the collecting chamber. Also, it is preferable for the pivot to be located on the side of the collecting chamber nearest the user such that the user is shielded from any dust which is released from the collecting chamber.

The separating apparatus preferably comprises a cyclonic separator where dirt-laden air is spun at high speed to centrifugally separate dirt from the airflow but it can be any form of bagless separator where the collection chamber is reused after it has been emptied.

The separating apparatus can have more than one separation stage. Preferably the collection areas of the first, second (and further) stage separators each lie adjacent the closure member such that all of the collected dirt and dust can be readily emptied from the separator.

A further aspect of the invention provides a vacuum cleaner incorporating a separating apparatus of the kind described above.

Embodiments of the invention will now be described, by way of example only, with reference to the accompanying drawings in which:

Figure 1 shows a bagless vacuum cleaner;

Figure 2 shows just the dirt and dust separation unit of the vacuum cleaner of Figure 1;

Figure 3 is a cross-section along line A-A of the dirt and dust separation unit of Figure 2, with the base of the unit in a closed position;

Figure 4 shows the same cross-section as Figure 3 but with the base in a partially open position;

Figure 5 shows the same cross-section as Figure 3 but with the base in a fully open position;

Figure 6 is a cross-section through the dirt and dust separation unit mounted on the chassis of the vacuum cleaner;

Figure 6A is a more detailed view of the same cross-section as Figure 6, showing the feature on the chassis which inhibits movement of the trigger release mechanism;

Figure 7 is a more detailed view of the lower part of the cross-section of Figure 3;

Figure 8 shows how dirt and dust accumulates in the dirt and dust separation unit; and,

Figures 9A – 9C show the seal of the vacuum cleaner in use.

Referring to Figures 1 to 3, a vacuum cleaner 10 has a main chassis 50 which supports dirt and dust separation apparatus 20. The lower part of the cleaner 10 comprises a

cleaner head 22 for engaging with the floor surface. The cleaner head has a downwardly facing suction inlet and a brush bar is mounted in the mouth of the inlet for agitating the floor surface. The cleaner head is pivotably mounted to a motor housing 24 which houses the motor and fan of the cleaner. Support wheels 26 are mounted to the motor housing for supporting the cleaner and allowing movement across a floor surface. A spine of the chassis 50 extends upwardly from the motor housing 24 to provide support for the components of the cleaner. A cleaning wand 42 having a second dirty air inlet 43 is connected by way of a hose (not shown) to the chassis at the base of the spine 50. The wand 42 is releasable from the spine 50 so as to allow a user to carry out above-the-floor cleaning and cleaning in places which are inaccessible by the main cleaning head 22. When the wand is fixed to the spine 50, the wand 42 forms the handle of the cleaner and a handgrip 40 at the remote end of the wand 42 allows a user to manoeuvre the cleaner. These features of the cleaner are well known and have been well documented elsewhere and can be seen, for example, in cleaners which are manufactured by DYSON™, and thus will not be described in any further detail.

Dirty air from the cleaner head 22 or wand inlet 43 is carried to the separator unit 20 by inlet conduit 28 and inlet 30. Separator 20 is a cyclonic separator which spins dirt, dust and other debris out of the airflow by centrifugal separation. One particular form of separator unit 20 is shown in detail in the figures as a preferred embodiment but it should be understood that there are many other ways in which the separator could be constructed. In the illustrated separator unit 20, airflow passes through a first separation stage and then a second separation stage. The first separation stage is a substantially cylindrically-walled cyclonic chamber 205 whose purpose is to separate large debris and dirt from the airflow. Inlet 30 is arranged to direct dirty air into the chamber 205 in a tangential direction to the wall of the chamber. Fins or baffles 207 extend radially outwardly from a central core of the chamber and serve to discourage separated dirt or dust from becoming re-entrained in the airflow when the vacuum cleaner is first started. The outlet of the first separation stage is a shroud 235, i.e. an apertured annular wall mounted coaxially inside the chamber 205. The area on the inner side of the shroud leads to the second separation stage. The second separation stage is a set of tapered

cyclonic chambers 240 which are arranged in parallel with one another. Each cyclonic chamber 240 has a tangential inlet 242, an outlet 243 for separated dirt and dust and a cleaned air outlet 244. Each of the cleaned air outlets 244 of the cyclonic chambers 240 communicate with an outlet conduit such that air from the individual outlets of the parallel cyclonic chambers is recombined into a single flow. The outlet conduit mates with a port on the chassis spine 50 when the separator unit 20 is fitted to the chassis.

In use dirty air which is laden with dirt, dust and other debris enters the first separation stage via inlet 30 and follows a spiral path around the chamber 205. The centrifugal force acting on the material in the airflow causes the larger debris and dirt to be separated from the airflow. This separated material collects at the base of the chamber 205, against base 210, due to a combination of gravity and the pressure gradient which exists in chamber 205 while the cleaner is in operation. The airflow passes through the shroud 235. The shroud 235 causes air to perform a sharp change of direction and causes fibrous material to collect on the outer wall of the shroud 235. The airflow passes to the second separation stage where it is divided between the cyclonic chambers. Air enters a respective one of the chambers via a tangential inlet and is then constrained to follow a spiral path of decreasing radius which greatly increases the speed of the airflow. The speed is sufficient to separate dirt and extremely fine dust from the airflow. The separated dirt and dust exits the cyclonic chambers 240 via outlets 243 which communicate with a central conduit 245. Dirt and dust falls, under gravity, towards the base of conduit 245 and collects at the lower end of the conduit 245 adjacent the base 210 in region 270 (Figure 8). Cleaned air from the parallel chambers 245 is recombined into a single flow and is channelled out of the separator unit 20, down the spine 50 of the chassis and through a pre-motor filter, fan and post-motor filter before finally being exhausted from the cleaner.

It should be understood that the second separation stage need not be a set of parallel cyclonic chambers 240. The second separation stage could be a single tapered cyclonic chamber which can fit inside the cylindrical chamber of the first separation stage, as shown in EP 0 042 723. Alternatively, the second separation stage could be a further

cylindrical cyclone or it could be omitted altogether. The first separation stage may be a tapered chamber rather than the cylindrical one described. However, in each of these alternatives, dirt and dust will be separated from an airflow without the use of a filter bag and will collect in a collection area.

The separator unit 20 is supported by the chassis 50 and is releasably held upon the chassis by a catch 280, shown more clearly in Figure 6A. The separator unit 20 is shown by itself in Figures 2 - 5. The separator unit 20 is releasable from the chassis to allow the separator to be emptied. A handle 202 is provided at the top of the separator unit 20 for allowing a user to carry the unit 20. The base 210 of the separator unit is movable between a closed position (shown in Figures 2, 3) and an open position (shown partially open in figure 4 and fully open in Figure 5) to permit emptying of the unit 20. The base 210 is hinged 214 to the cyclone chamber 205 to allow pivotal movement between the base 210 and chamber 205. Two separate collection areas lie adjacent to the base 210. The first collection area is the annular region between the cylindrical chamber wall 205 and the inner wall 206 at the lower end of the separator. The second collection area 270 is the area within the tube-like part 206. Thus, when base 210 opens, material empties from both of the collection areas. The outer annular edge of the base 210 has a radially inwardly extending slot to hold a seal 212. In use, with the base closed, the seal 212 fits tightly against the inner wall of the chamber 205 to maintain an air and dust-tight seal. A second, collar shaped, seal 213 extends axially outwardly from the lower annular edge of part 206 such that it fits tightly against the axially extending wall of the raised central cap of the base 210. The base 210 is held in the closed position by a lock mechanism 260, 262. The locking mechanism is controlled by a manually operable trigger 220. A linking mechanism 222, 223, 224, 230 joins the trigger 220 to the lock mechanism. Trigger 220 is received in a vertically extending channel on the spine-facing side of the separator which confines the trigger to follow a vertical movement. A lug on the trigger cooperates with a lever arm 222. The lever is pivotably fixed to the housing such that the remote end of the lever arm pushes downwardly against the upper end 231 of push rod 230. The push rod 230 is resiliently biased by spring 223 in the position shown in Figure 3 and can be displaced

downwardly (to the position shown in Figure 4) against the action of the spring 223 when the trigger is pulled. Spring 223 is held in a cavity of the housing and respective ends of the spring 223 act against the end wall of the cavity and the flange which is carried by the push rod 230 near end 231. The linking mechanism is shielded from dust by a gaiter 224, which is attached to the push rod 230 and the housing of the separator unit. The gaiter 224 stretches as the push rod moves downwardly, maintaining a dust-tight shield for the mechanism behind the gaiter 224. Push rod 230 is centrally located, and passes directly through the tube-like dust collecting conduit 245. Thus, the release mechanism is hidden from view. The central position of the release mechanism also helps to maintain the balance of the separator unit 20, which reduces stress on a user's hand when they hold the separator unit 20 and operate the release mechanism.

The lowermost end of the push rod has an inclined face which cooperates with a similarly inclined face on the catch 260 at the base. Catch 260 is pivotably mounted to the base and can be displaced, against the bias of spring 262, to the position shown in Figure 4. The catch has a hook 263 which engages with a corresponding hooked feature 264 on the central part of the base 210 so as to hold the base 210 in the closed position. The lowermost surface of the catch 260 is curved such that when the base 210 is pushed towards the closed position the catch 260 is displaced, allowing the hook 264 on the base 210 to engage with the hook 263 on the catch 260.

It will be appreciated that the trigger, linking mechanism and lock can be realised in many alternative ways. For example, the trigger 220 could be linked directly to the push rod 230, rather than being indirectly linked by the lever 222.

The lower end of the push rod 230 also carries an agitator 250. The agitator 250 is fixed to the push rod and thus moves upwardly and downwardly with the push rod as the trigger 220 is operated. In use, a plug of dirt and dust may form at the lower end of the second collection area, next to base 210. The agitator 250 has radially outwardly extending fins. In use, movement of the agitator will either push the plug or break the plug into smaller parts which can then fall out of the collection area. The inner surfaces

of the collection tube are smooth and tapered to discourage dirt from settling. The agitator could be more elaborate than the one shown here. For example, the agitator could be arranged to rotate about the longitudinal axis of the push rod 230 as the push rod moves upwards or downwards. A second agitator could be provided in the first collection area, the second agitator also being linked to the push rod or release mechanism. The cutting effect of the agitator on a plug of material can be improved by forming sharp or pointed edges on the agitator.

To ensure an air and dust-tight seal around the base, the seal 212 fits tightly against the chamber. This may cause the base to 'stick' in the closed position when the catch 260 is released. The push rod 230 has a sufficient length such that, when it is operated, it moves downwardly towards the catch 260, operates catch 260 and then continues to move towards the base 210, pushing against the base, overcoming the resistance of the seal 212 against the chamber wall 205 and thus pushing the base 210 open.

In use, a user removes the separator unit 20 from the chassis by operating release member 280 and carries the separator unit 20, by way of handle 202, to a dust bin or refuse sack. The lower end of the separator unit is held over or within the dust bin or sack and the trigger 220 is pulled. This causes the base 210 to swing open and dirt, dust and debris which has been collected in the chamber 205 falls out of the unit 20 into the bin. Due to the distance between the handle and base, and the direction in which the dirt falls from the unit 20, a user is not brought into contact with the dirt. As the dirt collects against the part of the chamber which opens, i.e. base 210, the dirt falls out of the chamber 205 with little or no additional effort by a user. Fine dust collected within the second stage collector 270 can be fully cleared by the user operating trigger 220 several times. This will operate agitator 250.

Referring again to Figure 8, the region within tube-like part 206 forms a second stage collection area. For good cyclonic separation, it is important that the second stage collection area is sealed with respect to the first stage collection area which surrounds it. Collar-shaped seal 213 seals against the base 210 to achieve the seal between the first

and second stage collection areas. A particular problem with sealing against the base 210 is that base is exposed to dirt and dust which can prevent a reliable seal from being achieved. Figures 9A – 9C show, in more detail, how the seal 213 fits against the base 210 during use.

Base 210 of the separator unit 20 has an inwardly tapering wall 201a and an upper wall 210b. The collar shaped seal 213 has a diameter D_S which is narrower than the diameter D_B of the base 210 at the final position of the seal. Seal 213 is formed from a resilient material such as a thermoplastic elastomer (TPE).

Figure 9A – 9C show the base 210 being returned to a closed position against the chamber 205 after a user has emptied the chamber 205. In Figure 9A it can be seen that a layer of fine dust 300 covers the base 210. In Figure 9B the base 210 has been moved nearer to its final, closed, position. The lower end of seal 213 has stretched to accommodate wall 210a of the base 210. Due to the tight fit between the leading edge 213a of the seal 213 and the wall 210a, the layer of dust on the outermost surface of the wall 210a is pushed downwardly by the leading edge 213a of the seal 213. Finally, Figure 9C shows the base 210 in a closed position. The seal 213 has moved further down the wall 210a of the base. A significant portion of the seal 213 now lies firmly against a portion of the wall 210a which has previously been cleaned by the leading edge of the seal 213a. Dust which has been displaced from the surface of the wall 210a accumulates 310 beneath the leading edge 213a of seal 213. Thus, a reliable seal is achieved between seal 213 and base 210 even in the presence of dirt and dust.

Figure 6 shows the separator unit 20 in position on the chassis 50 of the cleaner 10. To ensure that the base 210 is not accidentally opened when the cleaner is in use, the chassis 50 has a projection 218 which fits inside a notch 217 on the trigger 220 when the separator unit 20 is fitted to the chassis 50. Thus, the trigger 220 is inhibited from operating.

Referring again to Figure 3, chamber 205 (including the base 210) is removable from the remainder of the separator unit 20. Tube-shaped part 206 together with the fins 207 and shroud 235 all form part of the remainder of the separator unit 20 and thus are not removable with the chamber 205. A user may wish to remove chamber 205 in order to thoroughly clean the chamber 205, to gain access to the shroud 235 to remove any fibrous material or to remove any debris which has become trapped between the chamber 205 and the tube 206 or shroud 235. Chamber 205 is secured to the remainder of the separator unit 20 by a manually operable catch 295 and a further catch 296. Chamber 205 is removable in the direction shown by the arrow X. It is not possible to separate the chamber 205 from the remainder of the separator unit 20 until a user operates the release mechanism. Should a user attempt to separate the chamber 205 before releasing the base, by pulling the chamber 205 in the direction X, this will only serve to increase the retaining force exerted by catch 260 on the base 210 since the catch exerts a retaining force in the opposite direction to which the chamber 205 separates from the unit 20. This maintains the base in the closed position until such time as a user operates the release mechanism.

Claims

1. A separating apparatus for a bagless vacuum cleaner comprising an air inlet for receiving a dirt-laden airflow, an air outlet, a collecting chamber for collecting, in use, dirt and dust which has been separated from the airflow, the collecting chamber being separable from the remainder of the apparatus, and wherein part of the collecting chamber wall is a closure member which is movable between a closed position in which the closure member seals the collecting chamber and an open position in which dirt and dust can escape from the collecting chamber, the apparatus further comprising releasing means for releasing the closure member from the closed position, the releasing means comprising a manually operable actuating member which is located on a part of the apparatus which is remote from the collecting chamber, and wherein the apparatus is arranged such that the collecting chamber is not separable from the remainder of the apparatus until the closure member is in the open position.

2. A separating apparatus according to claim 1 wherein the releasing means forms part of the remainder of the apparatus and wherein the direction in which the collecting chamber is separable from the apparatus is opposite to the direction of the retaining force exerted by the releasing means on the closure member.

3. A separating apparatus according to claim 2 wherein the releasing means comprises a catch which engages with a hook on the closure member.

4. A separating apparatus according to claim 2 or 3 wherein the remainder of the apparatus comprises an insert for fitting inside the collecting chamber and wherein the releasing means is located within the insert.

5. A separating apparatus according to claim 4 wherein the insert is a conduit which defines a second collection area.

6. A separating apparatus according to claim 5 further comprising a second separator stage which lies upstream of the second collection area and wherein the second collection area is in communication with a dust outlet of the second separator stage.

7. A separating apparatus according to claim 6 wherein the second separator stage comprises a plurality of cyclonic separators which are arranged in parallel with one another.

8. A separating apparatus according to any one of the preceding claims further comprising a handle for carrying the apparatus and wherein the actuating member is located adjacent the handle.

9. A separating apparatus according to claim 8 wherein the actuating member is a trigger mechanism which is located beneath the handle.

10. A separating apparatus according to any one of the preceding claims wherein the releasing means is operable to apply an opening force to the centre of the closure member.

11. A separating apparatus according to claim 10 wherein the releasing means comprises a lock for locking the closure member in the closed position and wherein the releasing means also comprises a push rod which is movable to firstly unlock the closure member and secondly to exert the opening force on the closure member.

12. A separating apparatus according to any one of the preceding claims wherein the closure member carries a seal for sealing against the part of the collecting chamber in which it is fitted.

13. A separating apparatus according to any one of the preceding claims further comprising agitating means for agitating dirt held within the collecting chamber, the agitating means being operable by the actuating member.

14. A separating apparatus according to claim 13 wherein a linking mechanism couples the actuating member to the closure member and wherein the agitating means is mounted on the linking mechanism.

15. A separating apparatus according to any one of the preceding claims wherein the closure member forms a surface against which dirt and dust can collect during operation of the cleaner.

16. A separating apparatus according to claim 15 wherein the closure member forms a base of the collecting chamber.

17. A vacuum cleaner incorporating a separating apparatus according to any one of the preceding claims.

18. A separating apparatus for a vacuum cleaner or a vacuum cleaner incorporating a separating apparatus substantially as described herein with reference to the accompanying drawings.

The Patent Office

INVESTOR IN PEOPLE

Application No: GB 0109402.8 **Examiner:** John Wilson
Claims searched: 1-18 **Date of search:** 19 July 2001

Patents Act 1977
Search Report under Section 17

Databases searched:

UK Patent Office collections, including GB, EP, WO & US patent specifications, in:

UK Cl (Ed.S): A4F; B2P

Int Cl (Ed.7): A47L 9/16 9/20

Other: Online:- WPI, EPODOC, PAJ

Documents considered to be relevant:

Category	Identity of document and relevant passage	Relevant to claims
A	EP 1023864 A2 Sanyo - whole document	

X	Document indicating lack of novelty or inventive step	A	Document indicating technological background and/or state of the art.
Y	Document indicating lack of inventive step if combined with one or more other documents of same category.	P	Document published on or after the declared priority date but before the filing date of this invention.
&	Member of the same patent family	E	Patent document published on or after, but with priority date earlier than, the filing date of this application.