FRENCH REPUBLIC

MINISTRY
OF INDUSTRY AND COMMERCE

INDUSTRIAL PROPERTY DEPARTMENT

PATENT

Group 19. — Class 6. No. 1,094,603

Improved dust vacuums.

Mr. FRANÇOIS MARTELLIERE residing in France (Seine-et-Oise.)

Requested on December 16, 1953, at 2:40 p.m., in Paris.
Issued on December 8, 1954. — Published on May 23, 1955.

In common devices: dust vacuum cleaners, dust recovery is usually done by forcing the sucked air to pass through the weave of a fabric, which allows the gas to pass through, but retains the dust. This fabric is placed before or after the turbine; in either case, the pores of the fabric become blocked, the material accumulates behind the fabric and slows down the aspiration or evacuation of air. Most often, the container is full and there is nothing to tell, hence poor suction, yet emptying a dust bag is a recognized difficulty.

The invention aims to remedy these disadvantages, by:

1. Containers made of smooth and transparent material, replacing fabric bags;
2. Application of the "Whirlwind" principle and additional filtering using a paper sieve.

I. The container a, intended to receive the dust, made of glass or plastic, rigid or flexible, is transparent and has the following advantages:

As a result of the transparency, the user is able, when stopped, to see where the filling of the container is; he can therefore better judge when it must be emptied; he can hear and even see a lost object sucked up by the device and recover it.

Being smooth on the inside, the container is easy to handle, without giving off dust as in the case of a bag; in addition, the container is very easily detachable.

II. By application of the "Whirlwind" principle: device used in milling or silos, that is to say, arrival of the air sucked tangentially to the interior wall of the transparent container, the materials are deposited in the bottom of the container, after having separated from the air, before it passes through the filter screen, this preventing clogging, hence stable suction.

The filtering of the vacuumed dust is completed by an interchangeable sieve filter *b*, made of paper or special material, placed in front of the fabric *c*; replaced at each emptying, this sieve leaves the fabric clean and the whole thing is in new condition at each departure.

The filters are held on a frame or simple metal frame *h*.

The attached drawing gives all the information on the circuit imposed on the dust jet sucked up in a broom type vacuum cleaner model, where the device is held vertically or slightly inclined; perfectly filtered, the air can then pass through the turbines *d* and into the engine *e* which is energetically cooled, which represents a great advantage.

FRANÇOIS MARTELLIERE,
rue La Boétie 61, Paris (VIII).

1 .. 11612

Price of the booklet: 100 francs.

For the sale of booklets, contact the Imprimerie Nationale, 27 rue de la Convention, Paris (15th)

N° 1.094.603 M. Martellière **Unique sample**

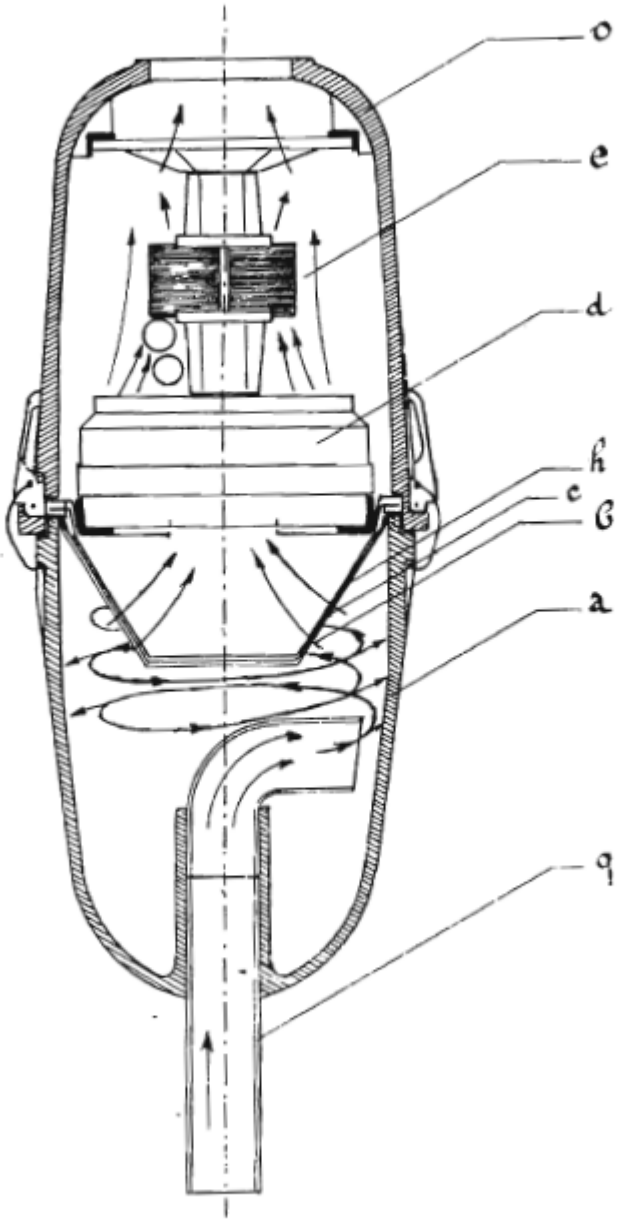

MORNINGSIDE

TRANSLATOR CERTIFICATION

Date: November 30, 2023

To whom it may concern:

I, Michael Meskers, a translator fluent in the English and French languages, on behalf of Morningside Translations, do solemnly and sincerely declare that the following is, to the best of my knowledge and belief, a true and correct translation of the document(s) listed below in a form that best reflects the intention and meaning of the original text.

The document is designated as:

- FR1094603A

Signature

Michael Meskers
Print