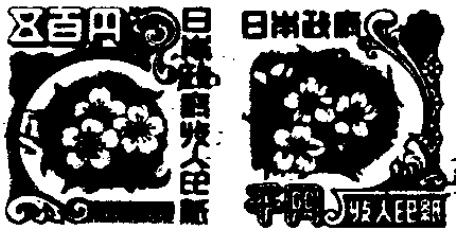

¥1,500

[Japanese Government Revenue Stamp 500 yen]
[Japanese Government Revenue Stamp 1000 yen]

Utility Model Application (15)

[stamp:] Accepted
March 15, 1972

To the Commissioner of the Japan Patent Office

1. Title of the Invention Gun-Shaped Desktop Electric Vacuum Cleaner

2. Inventor Same as Applicant

3. Applicant
   Name Takashi TSUKUJI
   Address 477-1 Sahara, Odai-cho, Taki-gun, Mie-ken

4. List of Attachments
   (1) Specification 1 copy
   (2) Drawings 1 copy
   (3) Power of Attorney 1 copy

[stamp:] 47-031503

Specification

1. Title of the Utility Model

Gun-Shaped Desktop Electric Vacuum Cleaner

2. Utility Model Claims

A desktop electric vacuum cleaner with the overall shape of a gun, the gun-shaped desktop electric vacuum cleaner having a grip portion with a lead wire running from a battery or power supply, a trigger serving as a switch, a main body containing, from the end of the gun portion to the rear tip, a motor, pump, filter, and intake tube, a guide tube extending inside from an intake tube through-hole, and a check valve provided on the inner end.

3. Detailed Description of the Utility Model

The present invention relates to a small electric vacuum cleaner with an overall gun shape used, for example, to remove pencil shavings from a desktop or dust from the interior of small electronic devices. This small electric vacuum cleaner is designed in particular to prevent the scattering of dust and debris that has been collected, and has a grip portion with a lead wire running from a battery or power supply, a trigger serving as a switch, a main body containing, from the end of the gun portion to the rear tip, a motor, pump, filter, and intake tube, a guide tube extending inside from an intake tube through-hole, and a check valve provided on the inner end, as explained below with reference to the drawing.

The grip portion 1 has a lead wire 2 running from a power supply and a cover 3 forming an auxiliary chamber 4, the trigger 5 activates a switch unit 6, a motor 8, pump 9, and filter 10 are arranged in series in the gun portion 7, a detachable intake tube 12 is secured in a threaded portion 11 at the tip, a guide tube 14 extends inside from a through-hole 13 in the intake tube 12, and a flexible tubular body 15 made of a thin, flexible rubber membrane is included which is irregularly shaped under normal conditions but which becomes regularly shaped due to the flow of air during vacuuming.

Here, 16 is an exhaust hole.

The dust and debris removal operation performed using this device will now be explained. When the grip portion 1 is gripped and the trigger 5 is pulled using a finger, the switch unit 6 is connected, current flows from the lead wire 2 to the motor 8 to rotate the turbofan inside the pump 9. Air inside the gun portion 7 is discharged around the motor 8 from the exhaust hole 16, air is taken in from the through-hole 13 in the intake tube 12, the flow of air inflates the tube body 15 to a substantially tube shape and opens the tube body, dust and debris is taken into the filter 10 along with the air, and the dust and debris is separated from the air by the filter 10 and collected.

The intake tube 12 is short and the auxiliary chamber 4 conveniently houses the auxiliary intake apparatus. When the power supply is a battery, the battery is housed inside the grip portion 1.

Because the portable electric vacuum cleaner of the present invention is small and deigned for desktop use, it may be used while being oriented in a direction that is not vertical. Therefore, reverse flow of dust and debris that has already been collected toward the intake tube is a concern, unlike regular household vacuum cleaners.

Also, despite small high-performance batteries having recently been adapted for use by motors, air not being discharged via the filter leads to relatively weak suction force, so obstruction of suction force must be avoided as much as possible. When simple valve structures are provided, such as tongue valves and ball valves, there are concerns that dust and debris will collect between the valve and the valve seat, a reverse flow of dust and debris will occur in the intake portion, and a certain amount of air resistance will develop.

In view of this situation, the present invention provides a vacuum cleaner with the overall shape of a gun, in which the grip can be reliably grasped, the device used in a relatively fixed orientation. Because a grip portion is provided, the device does not move much, and a reverse flow preventing effect is achieved. Also, because a check valve is provided at the tip of the guide tube leading into the intake tube, concerns about the reverse flow of dust and debris are further reduced. The shape also has appeal from a design point of view.

4. Brief Description of the Drawings

Fig. 1 is a cutaway cross-sectional view showing an example of the present utility model. In these drawings, 1 is the grip portion, 2 is a lead wire, 3 is a cover, 4 is an auxiliary chamber, 5 is the trigger, 6 is a switch unit, 7 is the gun portion, 8 is a motor, 9 is a pump, 10 is a filter, 11 is a threaded portion, 12 is an intake tube, 13 is a through-hole, 14 is a guide tube, 15 is a tubular body, and 16 is an exhaust hole.

Utility Model Applicant Takashi TSUKUJI

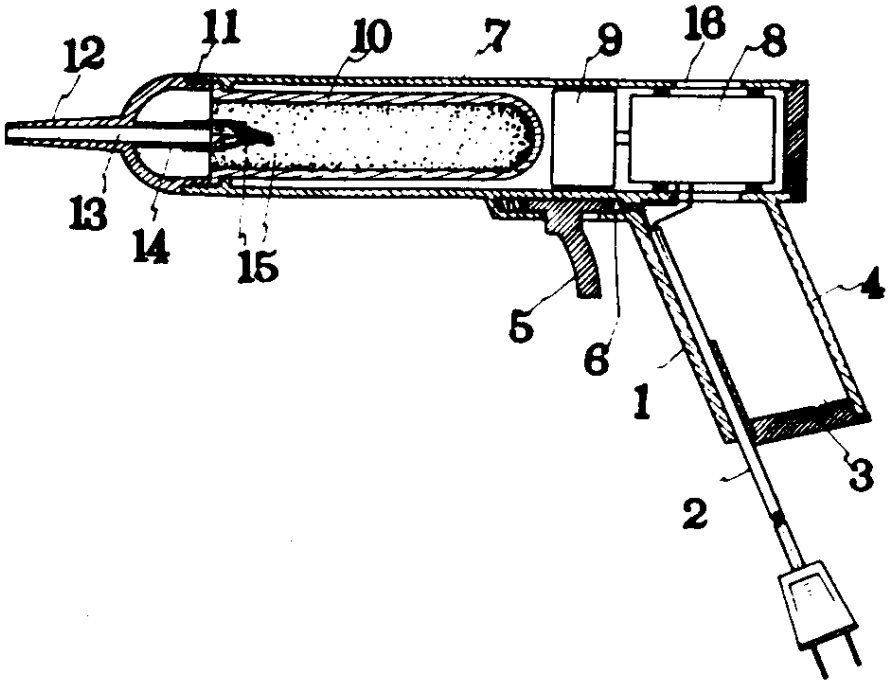

[stamp:] 107459

TRANSLATION CERTIFICATION

Date: May 31, 2024

To whom it may concern:

This is to certify that the attached translation is an accurate representation of the documents received by this office. The translation was completed from:

- Japanese

To:

- English (USA)

The documents are designated as:

- JPS48107459U

Emily Paras, Project Manager in this company, attests to the following:

"To the best of my knowledge, the aforementioned documents are a true, full and accurate translation of the specified documents."

Signature of Emily Paras