US 20030210688A1

(19) United States

(12) Patent Application Publication

(10) Pub. No.: US 2003/0210688 A1

(43) Pub. Date: Nov. 13, 2003

Basso et al.

(54) LOGICALLY GROUPING PHYSICAL PORTS INTO LOGICAL INTERFACES TO EXPAND BANDWIDTH

(75) Inventors: **Claude Basso**, Raleigh, NC (US); **Francis Arts**, Arendonk (BE); **Bay Van Nguyen**, Cary, NC (US); **Natarajan Vaidhyanathan**, Greensboro, NC (US); **Colin Beaton Verrilli**, Apex, NC (US)

Correspondence Address:
Joscelyn G. Cockburn
IBM Corporation 9CCA/B002
PO Box 12195
Research Triangle Park, NC 27709 (US)

(73) Assignees: **International Business Machines Corporation**, Armonk, NY; **Alcatel**, Paris (FR)

(21) Appl. No.: **10/144,075**

(22) Filed: **May 13, 2002**

Publication Classification

(51) **Int. Cl.**[7] **H04L 12/28**

(52) **U.S. Cl.** **370/389**; 370/352; 370/400

(57) **ABSTRACT**

A method, system and computer program product for routing packets. A network device, e.g., router, may comprise a switch fabric coupled to a plurality of blades where each blade may comprise one or more network processors coupled to one or more physical ports. The physical ports may be connected to another one or more network devices. A plurality of physical ports across one or more blades connected to the same network device may be logically mapped into a logical interface to that network device. By logically grouping a plurality of physical ports into a logical interface to a network device, a network processor may be able to transmit packets of data to that network device across multiple ports instead of one physical port.

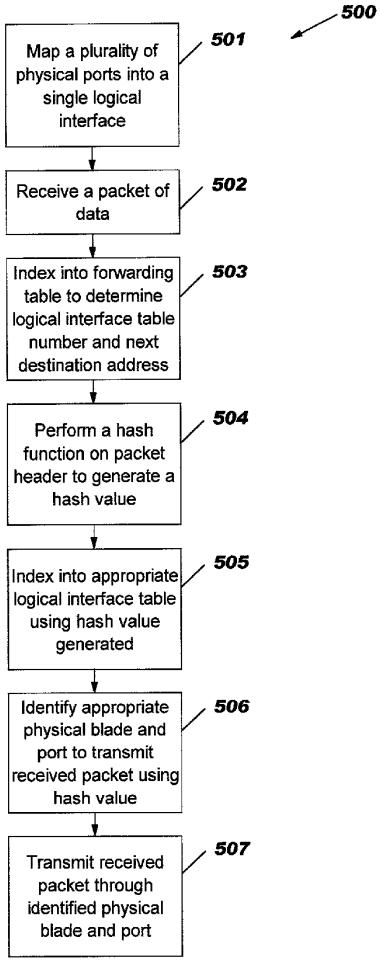

FIG. 1

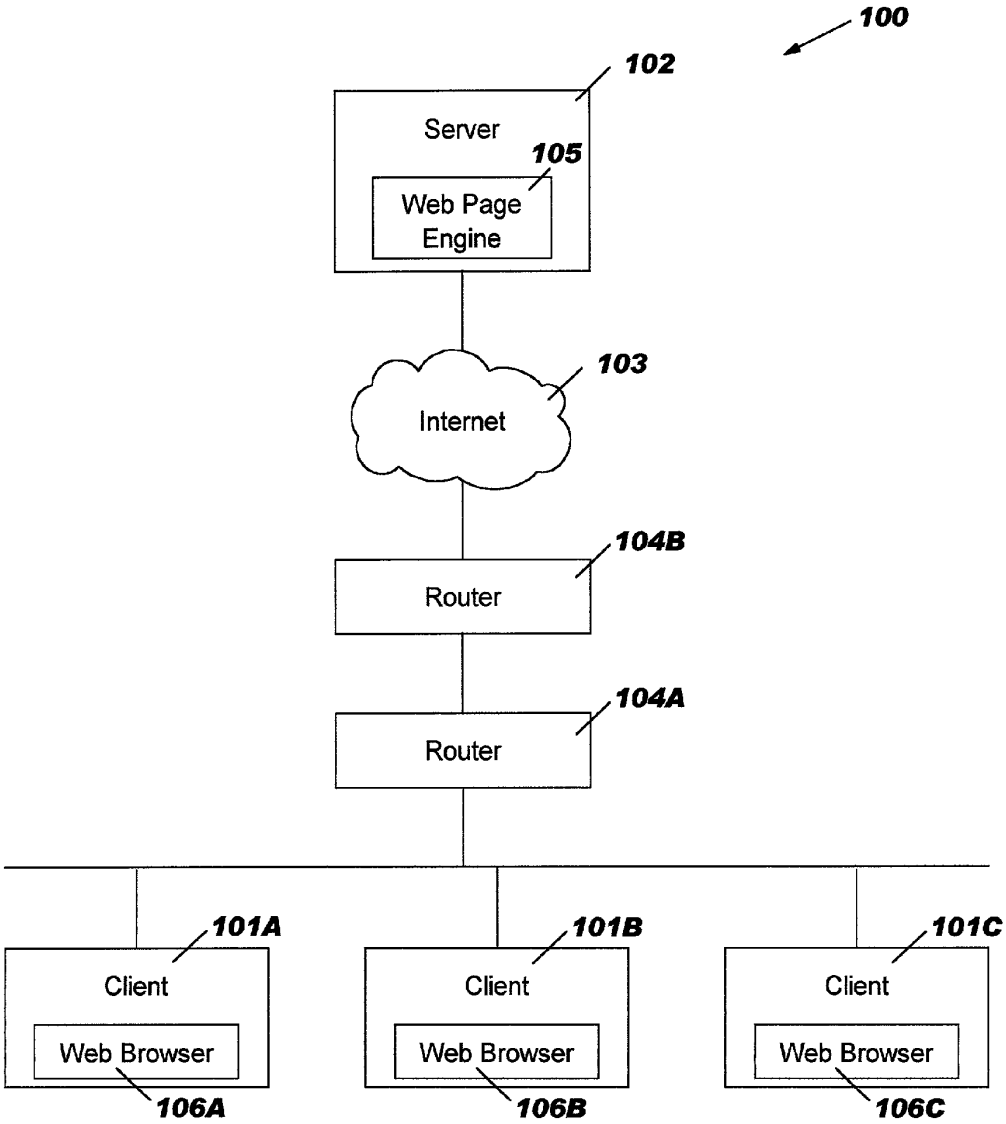
100
102
Server
105
Web Page Engine
103
Internet
104B
Router
104A
Router
101A
Client
Web Browser
106A
101B
Client
Web Browser
106B
101C
Client
Web Browser
106C

FIG. 2

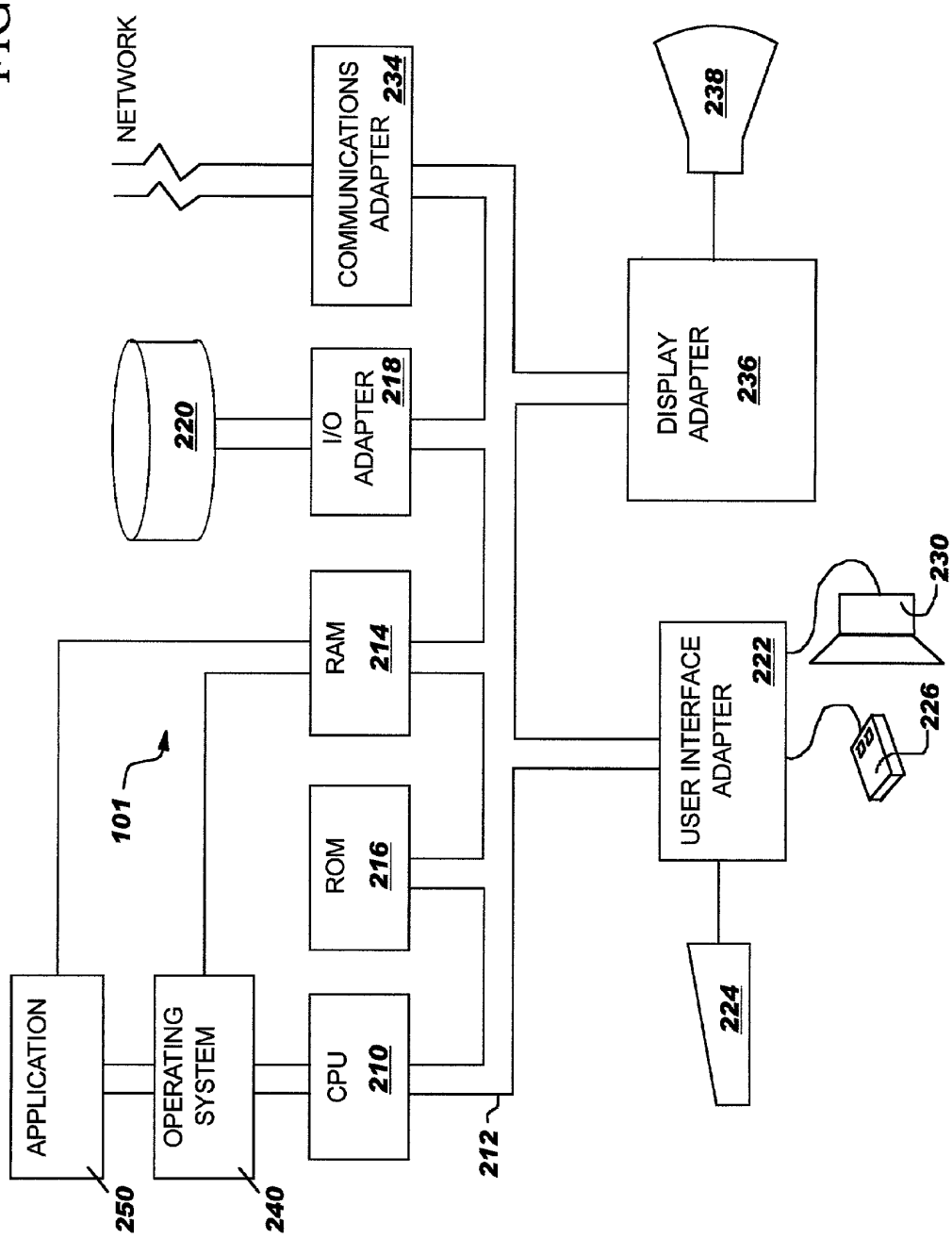
NETWORK
COMMUNICATIONS ADAPTER 234
238
220
I/O ADAPTER 218
DISPLAY ADAPTER 236
RAM 214
230
101
USER INTERFACE ADAPTER 222
226
ROM 216
APPLICATION
OPERATING SYSTEM
CPU 210
224
250
240
212

FIG. 3

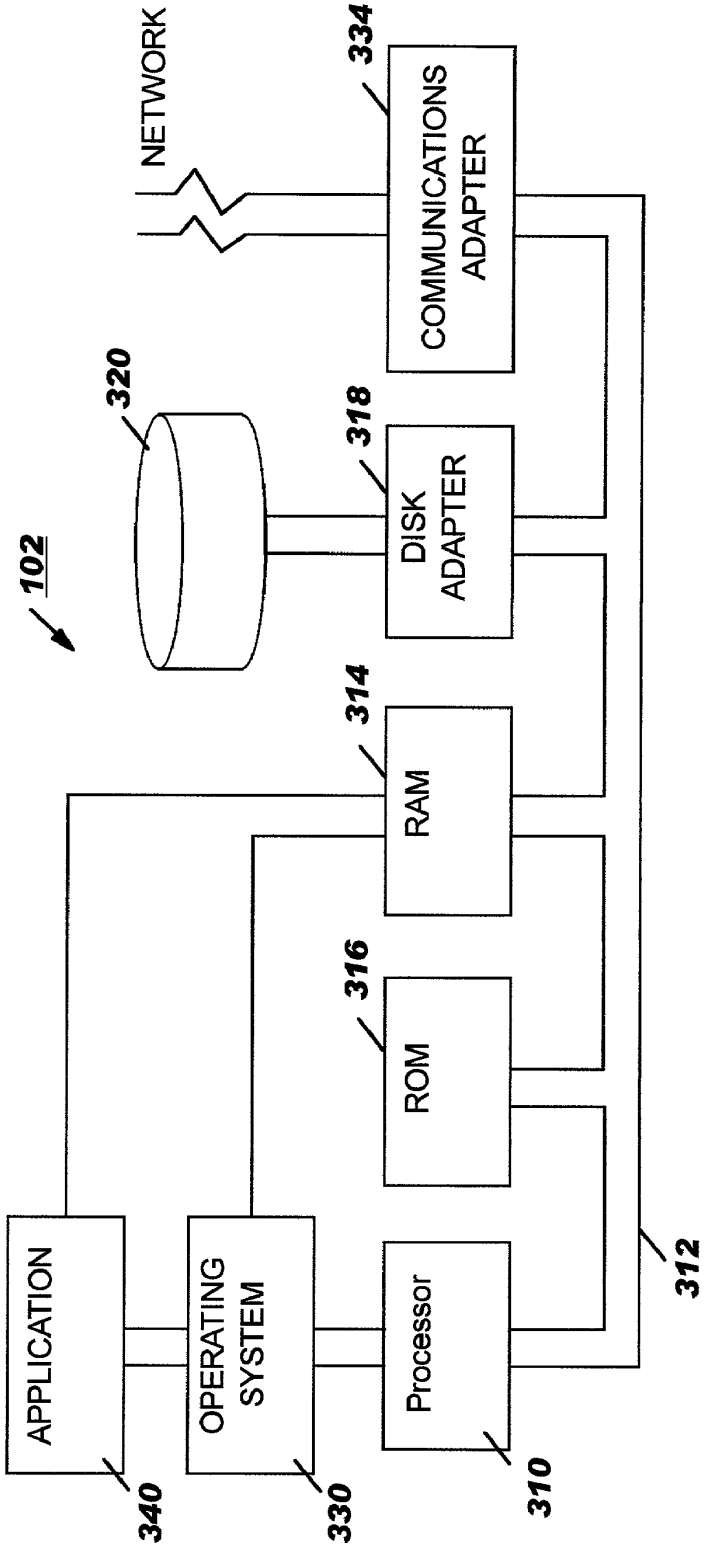
102
NETWORK
334
COMMUNICATIONS ADAPTER
320
318
DISK ADAPTER
314
RAM
316
ROM
APPLICATION
OPERATING SYSTEM
Processor
340
330
310
312

FIG. 4

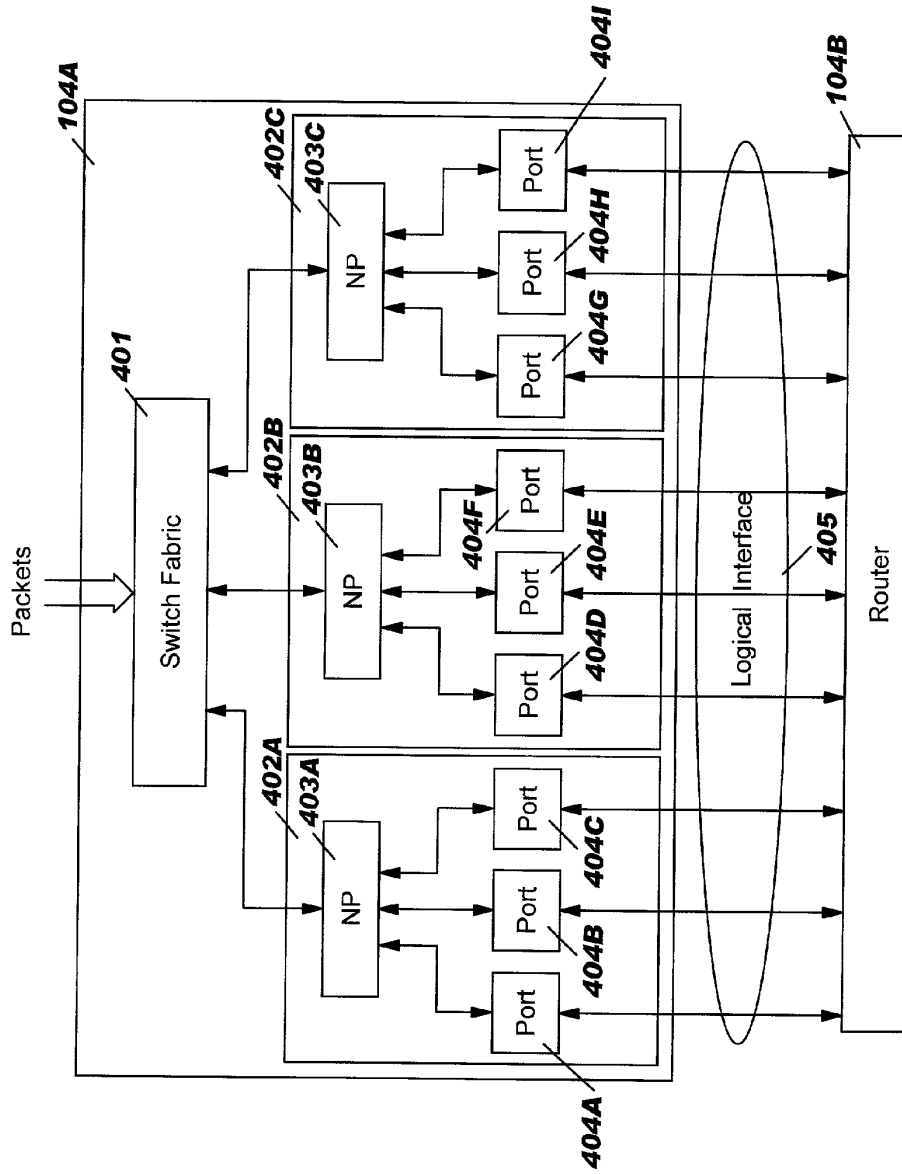
Packets
104A
401
Switch Fabric
402A
402B
402C
403A
403B
403C
NP
NP
NP
Port
404A
404B
404C
404D
404E
404F
404G
404H
404I
Logical Interface
405
104B
Router

FIG. 5

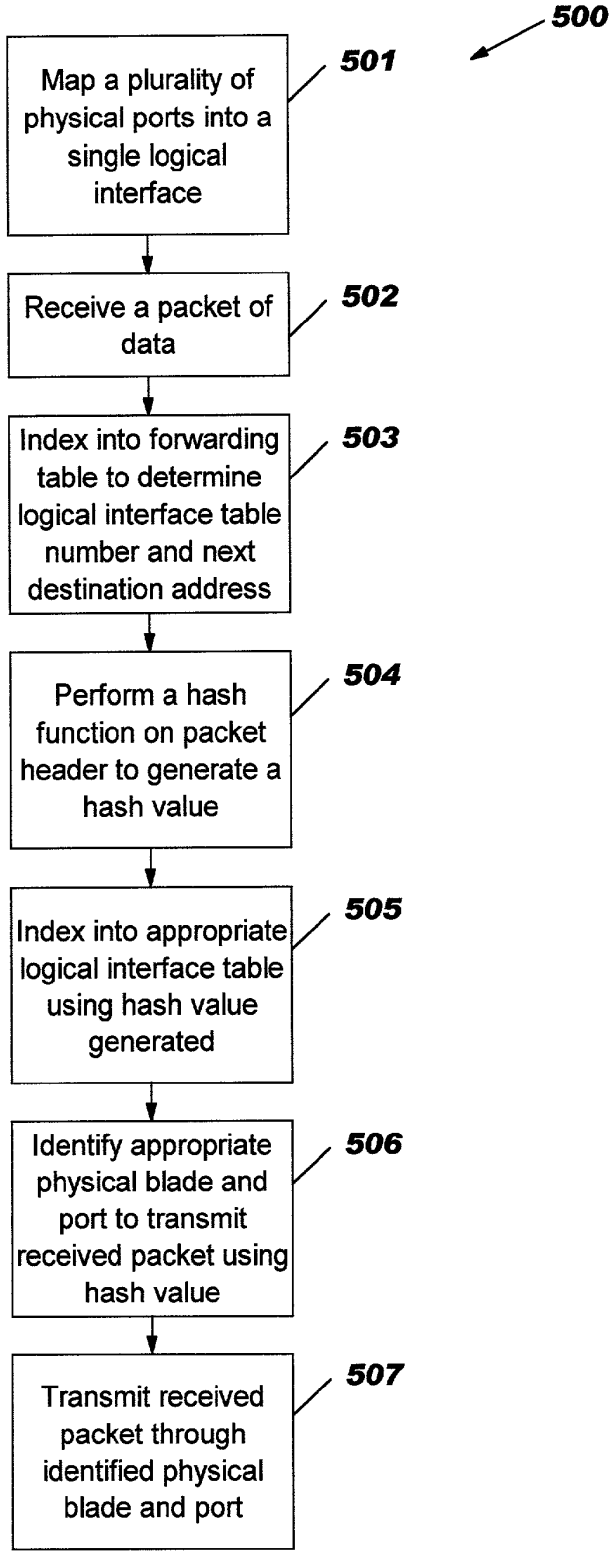
500
501
Map a plurality of physical ports into a single logical interface
502
Receive a packet of data
503
Index into forwarding table to determine logical interface table number and next destination address
504
Perform a hash function on packet header to generate a hash value
505
Index into appropriate logical interface table using hash value generated
506
Identify appropriate physical blade and port to transmit received packet using hash value
507
Transmit received packet through identified physical blade and port

LOGICALLY GROUPING PHYSICAL PORTS INTO LOGICAL INTERFACES TO EXPAND BANDWIDTH

TECHNICAL FIELD

[0001] The present invention relates to the field of packet switching networks, and more particularly to logically grouping physical ports of a network device, e.g., router, into logical interfaces thereby expanding the bandwidth capacity of transmitting packets from that network device to another network device.

BACKGROUND INFORMATION

[0002] A packet switching network has switching points or nodes (commonly referred to as routers or switches) for transmissions of data among senders and receivers connected to the network. The switching performed by these switching points is in fact the action of passing on packets of data received by a switching point or node to a further node in the network. Such switching actions are the means by which communication data is moved through the packet switching network.

[0003] Each router may comprise a switch fabric coupled to a plurality of blades. The switch fabric may be configured to direct the incoming packets of data to particular blades coupled to the switch fabric. Each blade may comprise a processor commonly referred to as a network processor coupled to one or more ports. Each port may be physically connected to another network device, e.g., router. Upon the network processor processing a packet of data, the network processor may index into a table, commonly referred to as a forwarding table, to determine the address of which port to transmit the processed packet. The forwarding table may comprise a plurality of entries where each entry may comprise an address of a particular port. The address indexed may correspond to a particular port connected to another network device. The processed packet may then be transmitted across that port to the connected network device.

[0004] Since the processed packets may be transmitted by the network processor across one particular address, the rate at which the processed packets are transmitted is limited to the bandwidth of the connection. That is, since the processed packets may be transmitted by the network processor across one physical port to a particular network device, the rate at which the processed packets are transmitted is limited to the bandwidth of the physical connection between the port and the network device.

[0005] If, however, the packets of data were able to be transmitted across multiple physical ports to a particular network device from a particular network processor, then the bandwidth capacity would be increased. That is, if packets of data were able to be transmitted across multiple physical ports to a particular network device by a network processor, then the rate packets of data are transmitted may be increased.

[0006] It would therefore be desirable to enable a network processor to transmit packets of data across multiple physical ports to a particular network device instead of one physical port.

SUMMARY

[0007] The problems outlined above may at least in part be solved in some embodiments by mapping a plurality of physical ports connected to a network device into a logical interface to that network device, e.g., router, gateway, edge device, server. That is, a plurality of physical ports may be logically grouped into a logical interface to a network device thereby enabling a network processor to transmit packets of data across multiple ports instead of one physical port.

[0008] In one embodiment of the present invention, a method for routing packets may comprise the step of mapping a plurality of physical ports in a network device, e.g., router, connected to another network device, e.g., router, gateway, edge device, server, into a logical interface to that network device. By logically grouping a plurality of ports into a logical interface, a network processor in the network device, e.g., router, may be able to transmit packets of data across multiple physical ports to a particular network device instead of one physical port as discussed further below.

[0009] A network device, e.g., router, may comprise a switch fabric coupled to a plurality of blades where each blade may comprise one or more network processors coupled to one or more ports. These ports may be connected to another one or more network devices. The switch fabric may be configured to direct incoming packets of data to particular blades where one or more of the network processors in the recipient blade may be configured to process the received packets.

[0010] Upon a network processor receiving a packet of data, the network processor may index into a table, commonly referred to as a forwarding table, to determine the table associated with a particular logical interface as well as the next destination address. The forwarding table may comprise a plurality of entries where each entry may comprise information indicating a particular table associated with a particular logical interface as well as the next destination address. Each logical interface may be associated with a table storing a plurality of entries containing blade/port combinations as discussed further below. In one embodiment, an entry may be indexed in the forwarding table using a destination address in the received packet header.

[0011] A hash function may then be performed on the received packet to generate a hash value. In one embodiment, a hash function may be performed on the source and destination address in the packet header to generate a hash value.

[0012] The hash value generated may be used to index into the table associated with a particular logical interface. Upon indexing into the table associated with the logical interface, an appropriate blade/port combination may be identified to transmit the received packet of data. In one embodiment, a blade/port combination may be selected in the indexed entry of the table associated with the logical interface by using a portion of the bits of the hashed value. The received packet may then be transmitted through the identified blade/port combination to the next destination (next destination previously identified by the next destination address in the forwarding table).

[0013] The foregoing has outlined rather broadly the features and technical advantages of one or more embodiments of the present invention in order that the detailed description of the invention that follows may be better understood. Additional features and advantages of the invention will be described hereinafter which form the subject of the claims of the invention.

BRIEF DESCRIPTION OF THE DRAWINGS

[0014] A better understanding of the present invention can be obtained when the following detailed description is considered in conjunction with the following drawings, in which:

[0015] **FIG. 1** illustrates a network system configured in accordance with the present invention;

[0016] **FIG. 2** illustrates an embodiment of a client in the network system configured in accordance with the present invention;

[0017] **FIG. 3** illustrates an embodiment of a server in the network system configured in accordance with the present invention;

[0018] **FIG. 4** illustrates an embodiment of a router with logical groupings of its physical ports in accordance with the present invention; and

[0019] **FIG. 5** is a flowchart of a method for routing packets implementing logical interface(s) in accordance with the present invention.

DETAILED DESCRIPTION

[0020] **FIG. 1**—Network System

[0021] **FIG. 1** illustrates one embodiment of the present invention of a network system **100**. Network system **100** may comprise one or more clients **101**A-C connected to a server **102** via the Internet **103**. A more detailed description of server **102** is provided further below in conjunction with **FIG. 3**. The Internet **103** may refer to a network of computers. Network system **100** may further comprise one or more routers, e.g., **104**A-B, that may be coupled to one or more clients **101**A-C. Routers **104**A-B may be configured to forward packets of information from the one or more clients **101**A-C to the Internet **103**. Clients **101**A-C may collectively or individually be referred to as clients **101** or client **101**, respectively. A more detailed description of client **101** is provided further below in conjunction with **FIG. 2**. Routers **104**A-B may collectively or individually be referred to as routers **104** or router **104**, respectively. A more detailed description of router **104** implementing logical interface(s) is provided further below in conjunction with **FIG. 4**. It is noted that network system **100** may comprise any number of clients **101**, any number of servers **102** as well as any number of routers **104** and that **FIG. 1** is illustrative. It is further noted that network system **100** may comprise one or more routers (not shown) that may be coupled to server **102**. These routers (not shown) may be configured to forward received packets of information to server **102**. It is further noted that the connection between clients **101** and the Internet **103** may be any medium type, e.g., wireless, wired. It is further noted that client **101** may be any type of device, e.g., wireless, Personal Digital Assistant (PDA), cell phone, personal computer system, workstation, Internet appliance, configured with the capability of connecting to the Internet **103** and consequently communicating with server **102**. It is further noted that **FIG. 1** is not to be limited in scope to any one particular embodiment.

[0022] Referring to **FIG. 1**, server **102** may comprise a web page engine **105** for maintaining and providing access to an Internet web page which is enabled to forward static web pages as well as web pages to a web browser **106** of client **101** via the Internet **103**. Each client **101**A-C may comprise a web browser **106**A-C, respectively, which may be configured for communicating with the Internet **103** and for reading and executing web pages. Browsers **106**A-C may collectively or individually be referred to as browsers **106** or browser **106**, respectively. While the illustrated client engine is a web browser **106**, those skilled in the art will recognize that other client engines may be used in accordance with the present invention.

[0023] **FIG. 2**—Hardware Configuration of Client

[0024] **FIG. 2** illustrates a typical hardware configuration of client **101** (**FIG. 1**) which is representative of a hardware environment for practicing the present invention. Client **101** may have a central processing unit (CPU) **210** coupled to various other components by system bus **212**. An operating system **240** may run on CPU **210** and provide control and coordinate the functions of the various components of **FIG. 2**. An application **250** in accordance with the principles of the present invention may run in conjunction with operating system **240** and provide calls to operating system **240** where the calls implement the various functions or services to be performed by application **250**. Application **250** may include, for example, a web browser. Read-Only Memory (ROM) **216** may be coupled to system bus **212** and include a Basic Input/Output System ("BIOS") that controls certain basic functions of client **101**. Random access memory (RAM) **214** and Input/Output (**1/0**) adapter **218** may also be coupled to system bus **212**. It should be noted that software components including operating system **240** and application **250** may be loaded into RAM **214** which may be client's **101** main memory for execution. I/O adapter **218** may be a small computer system interface ("SCSI") adapter that communicates with a disk unit **220**, e.g., disk drive. It is noted that the web browser may reside in disk unit **220** or in application **250**.

[0025] Referring to **FIG. 2**, client **101** may further comprise a communications adapter **234** coupled to bus **212**. Communications adapter **234** may enable client **101** to communicate with server **102** (**FIG. 1**), router **104** (**FIG. 1**). I/O devices may also be connected to system bus **212** via a user interface adapter **222** and a display adapter **236**. Keyboard **224**, mouse **226** and speaker **230** may all be interconnected to bus **212** through user interface adapter **222**. Event data may be inputted to client **101** through any of these devices. A display monitor **238** may be connected to system bus **212** by display adapter **236**. In this manner, a user is capable of inputting to client **101** through keyboard **224** or mouse **226** and receiving output from client **101** via display **238**.

[0026] **FIG. 3**—Hardware Configuration of Server

[0027] **FIG. 3** illustrates an embodiment of the present invention of server **102** (**FIG. 1**). Referring to **FIG. 3**, server **102** may comprise a processor **310** coupled to various other components by system bus **312**. An operating system **330** may run on processor **310** and provide control as well as coordinate the function of the various components of **FIG. 3**. An application **340** in accordance with the principles of the present invention may run in conjunction with operating system **330** and provide calls to operating system **330** where the calls implement the various functions or services to be performed by application **340**. An application **340** may include, for example, a program for operating a web site.

Read-only memory (ROM) **316** may be coupled to system bus **312** and include a Basic Input/Output System ("BIOS") that controls certain basic functions of server **102**. Random access memory (RAM) **314** and disk adapter **318** may also be coupled to system bus **312**. It should be noted that software components including operating system **330** and application **340** may be loaded into RAM **314** which may be server's **102** main memory. Disk adapter **318** may be an adapter that communicates with disk unit **320**, e.g., disk drive. Communications adapter **334** may also be coupled to system bus **312**. Communications adapter **334** may interconnect bus **312** with an outside network enabling server **102** to communicate with client **101** via the Internet **103**.

[**0028**] **FIG. 4**—Hardware Configuration of Router

[**0029**] **FIG. 4** illustrates an embodiment of the present invention of router **104**A (**FIG. 1**) implementing logical interface(s) as discussed further below. It is noted that even though the following discusses an embodiment of the present invention of router **104**A that the description of router **104**A applies to any router **104**, e.g., router **104**B, of network system **100** (**FIG. 1**).

[**0030**] Returning to **FIG. 4**, router **104**A may be configured to receive packets of data such as from client **101** (**FIG. 1**), e.g., client **101**A, that may be directed to another particular network device, e.g., router **104**B, in network **100** (**FIG. 1**). Router **104**A may comprise a switch fabric **401** configured to direct the incoming packets of data to particular blades **402**A-C coupled to switch fabric **401**. Blade **402**A may comprise a network processor **403**A coupled with one or more ports **404**A-C. Blade **402**B may comprise a network processor **403**B coupled with one or more ports **404**D-F. Blade **402**C may comprise a network processor **403**C coupled with one or more ports **404**G-I. Blades **402**A-C may collectively or individually be referred to as blades **402** or blade **402**, respectively. Network processors **403**A-C may collectively or individually be referred to as network processors **403** or network processor **403**, respectively. Ports **404**A-I may collectively or individually be referred to as ports **404** or port **404**, respectively. Each port **404** may be coupled to a particular network device, e.g., gateway, server, router such as router **104**B, in network system **100**. It is noted that some of ports **404** may be coupled to a separate network device and that **FIG. 4** is illustrative. It is further noted that router **104**A may comprise any number of blades **402** and each blade **402** may comprise any number of network processors **403** and ports **404**.

[**0031**] Referring to **FIG. 4**, network processor **403** may be configured to receive a packet of data from switch fabric **401**. Upon receiving a packet, network processor **403** may be configured to process the packet of data. Processing may include but not limited to: determining what activities to be performed on the received packet, transmitting or discarding the received packet, determining which network device, e.g., router such as router **104**B, server, edge device, gateway, to transmit the received packet, etc. Network processor **403** may then transmit the processed packet to a particular network device, e.g., router such as router **104**B, through a port **404** connected to that network device.

[**0032**] As stated in the Background Information section, each port may be physically coupled to another network device, e.g., router. Since the processed packets may be transmitted by a network processor across one particular address, the rate at which the processed packets are transmitted is limited to the bandwidth of the connection. That is, since the processed packets may be transmitted by the network processor across one physical port to a particular network device, the rate at which the processed packets are transmitted is limited to the bandwidth of the physical connection between the port and the network device.

[**0033**] If, however, packets of data were able to be transmitted across multiple physical ports to a particular network device from a particular network processor, then the bandwidth capacity would be increased. That is, if packets of data were able to be transmitted across multiple physical ports to a particular network device by a network processor, then the rate packets of data are transmitted may be increased. It would therefore be desirable to enable a network processor to transmit packets of data across multiple physical ports to a particular network device instead of one physical port.

[**0034**] Network processor **403** may be configured to transmit packets of data across multiple physical ports **404** to a particular network device, e.g., router **104**B, by logically grouping a plurality of physical ports **404**, e.g., ports **404**A-I, into a logical interface **405**. That is, the physical connections between router **104**A and a particular network device, e.g., router **104**B, may be logically grouped into a logical interface **405**. Each set of physical connections between router **104**A and a particular network device may be logically grouped into a particular logical interface **405**. For example, if ports **404**A-F were physically connected to network device #**1**, then ports **404**A-F may be logically grouped into logical interface **405**#**1**. If ports **404**G-I were physically connected to network device #**2**, then ports **404**G-I may be logically grouped into logical interface **405**#**2**. It is noted that physical ports **404** may be logically grouped into more than one logical interface **405** and that **FIG. 4** is illustrative. It is further noted that each logical interface **405** may be associated with logically grouping a plurality of physical connections to a particular network device, e.g., router, gateway, edge device, server. It is further noted that a logical interface **405** may be associated with logically grouping a plurality of ports in either one blade **402** or across multiple blades **402**.

[**0035**] By logically grouping a plurality of ports **404** coupled to a particular network device into a logical interface **405**, network processor **403** may be configured to transmit processed packets to that particular network device via any blade **402**/port **404** combination grouped in that logical interface **405**. For example, referring to **FIG. 4**, ports **404**A-**404**I are physically connected to router **104**B. If ports **404**A-**404**I were logically grouped into logical interface **405**, then a particular network processor **403**, e.g., network processor **403**A, may be configured to transmit processed packets that are determined to be transmitted to router **104**B through any of ports **404**A-**404**I in blades **402**A-C, respectively. Network processor **403**, e.g., network processor **403**A, may be configured to transmit the processed packets to router **104**B through ports **404**, e.g., ports **404**D-I, not in its blade **402**, e.g., blade **402**A, by forwarding the processed packets to switch fabric **401** which may then direct the processed packets to another appropriate physical blade **402**/port **404** combination. Network processor **403**, e.g., network processor **403**A, may further be configured to transmit the processed packets to router **104**B through any ports **404**, e.g., ports **404**A-C, in its blade **402**, e.g., blade

402A, instead of just one physical port **404** in its blade **402**, e.g., blade **402**A. A more detailed description of routing packets implementing logical interface(s) **405** is provided below in **FIG. 5**.

[**0036**] Network processor **403**, e.g., network processor **403**A, may be configured in one embodiment to comprise a memory (not shown), e.g., non-volatile memory, to store a program to perform the steps of a method for routing packets implementing logical interface(s) **405** as described below in conjunction with **FIG. 5**. The memory (not shown) in network processor **403** may further be configured to store a forwarding table and tables associated with logical interfaces **405** as discussed below in **FIG. 5**. Network processor **403** may further comprise a processor (not shown), commonly referred to as a packet processor, coupled to the memory (not shown). The packet processor (not shown) may be configured to execute the instructions of the program. It is further noted that the steps of the method performed by the program mentioned above may in an alternative embodiment be implemented in hardware such as in an Application Specific Integrated Circuit (ASIC).

[**0037**] **FIG. 5**—Method for Routing Packets

[**0038**] **FIG. 5** is a flowchart of one embodiment of the present invention of a method **500** for routing packets implementing logical interface(s) **405** (**FIG. 4**).

[**0039**] Referring to **FIG. 5**, in conjunction with **FIGS. 1 and 4**, in step **501**, a plurality of physical ports **404** connected to a particular network device, e.g., router **104**B, may be mapped into a logical interface **405**. For example, referring to **FIG. 4**, ports **404**A-I of router **104**A connected to router **104**B may be logically grouped into a logical interface **405** thereby enabling network processor **403**, e.g., network processor **403**A, to transmit packets of data across multiple physical ports **404** to a particular network device, e.g., router **104**B, instead of one physical port **404** as discussed further below.

[**0040**] In step **502**, network processor **403**, e.g., network processor **403**A, may receive a packet of data from switch fabric **401**. Upon receiving the packet of data, network processor **403**, in step **503**, may index into a table, commonly referred to as a forwarding table, to determine the table associated with a particular logical interface **405** as well as the next destination address, i.e., the next hop address. The forwarding table may comprise a plurality of entries where each entry may comprise information indicating a particular table associated with a particular logical interface **405** as well as the next destination address. Each logical interface **405** may be associated with a table storing a plurality of entries containing blade **402**/port **404** combinations as discussed further below. In one embodiment, an entry may be indexed in the forwarding table using a destination address in the received packet header. It is noted that an entry may be indexed in the forwarding table using other means and that such means would be recognized by an artisan of ordinary skill in the art. It is further noted that embodiments implementing such means would fall within the scope of the present invention.

[**0041**] In step **504**, a hash function may be performed on the received packet to generate a hash value. In one embodiment, a hash function may be performed on the source and destination address in the packet header to generate a hash value. It is noted that in other embodiments a hash function may be performed on different fields, e.g., port, type of service, in the received packet to generate a hash value.

[**0042**] In step **505**, the hash value generated in step **504** may be used to index into the table associated with a particular logical interface **405** determined in step **503**. Upon indexing into the table associated with the logical interface **405** determined in step **503**, an appropriate blade **402**/port **404** combination may be identified in step **506** to transmit the received packet of data as explained below.

[**0043**] As stated above, the table associated with a particular logical interface **405** may comprise a plurality of entries where each entry may comprise a threshold value associated with a particular blade **402**/port **404** combination. The threshold value may represent a percentage of the total number of packets received by router **104**A that may be transmitted through the blade **402**/port **404** combination associated with that threshold value. In one embodiment, the threshold value may be updated periodically by a user, e.g., system administrator, in control of router **104**, e.g., router **104**A. For example, the threshold value, e.g., twenty percent of the number of packets received by router **104**A, associated with a particular blade **402**/port **404** combination may be updated by lowering the threshold value by one percent during each update. An example of an entry of the table associated with a particular logical interface **405** is shown in Table 1 below:

TABLE 1

Th 0	Th 1	Th 2	Th 3	Th 4	Th 5	Th 6	Th 7	Th 8	Th 9	Th A	Th B	Th C	Th D	Th E	Th F
B0	P0	B1	P1	B2	P2	B3	P3	B4	P4	B5	P5	B6	P6	B7	P7
B8	P8	B9	P9	BA	PA	BB	PB	BC	PC	BD	PD	BE	PE	BF	PF

[**0044**] Table 1 above illustrates an exemplary entry in the table associated with a particular logical interface **405**. Each entry may comprise a plurality of threshold values (16 threshold values in exemplary Table 1) where each threshold value is associated with a particular blade **402**/port **404** combination. For example, threshold value (Th**0**) is associated with blade B**0**/port P**0** combination where blade BO may refer to a particular blade **402**, e.g., blade **402**B, and port PO may refer to a particular port **404**, e.g., port **404**E. Threshold value (Th**1**) is associated with blade B**1**/port P**1** combination and so forth. As stated above, each threshold value may represent a percentage of the total number of packets received by router **104**A that may be transmitted through the blade **402**/port **404** combination associated with that threshold value. For example, threshold value (Th**0**) may represent a percentage of the total number of packets received by router **104**A that may be transmitted through

port PO in blade BO. If port PO refers to port **404**D and blade BO refers to blade **402**B, then if Th**0** has a value of twenty percent, a maximum of twenty percent of the total packets received by router **104**A may be transmitted through port **404**D in blade **402**B.

[**0045**] As stated above, upon indexing into the table associated with the logical interface **405** determined in step **503**, an appropriate blade **402**/port **404** combination may be identified in step **506** to transmit the received packet of data. In one embodiment, the hash value generated in step **504** may be used to select a particular threshold value and hence a blade **402**/port **404** combination associated with the selected threshold value. In one embodiment, a portion of the bits of the hash value, e.g., most significant bits, may be used to select a particular threshold value in the entry indexed in step **505**. For example, referring to Table 1, since there are **16** different threshold values in each entry of the table associated with logical interface **405**, only four bits of the hash value generated in step **504** may be used to select a threshold value. Upon selecting a threshold value, the blade **402**/port **404** combination associated with the selected threshold value may be used to transmit the received packet.

[**0046**] In step **507**, the received packet may be transmitted through the blade **402**/port **404** combination identified in step **506** to the destination identified in step **503**. For example, referring to **FIG. 4**, if network processor **403**A identified blade **402**B/port **404**D as being the blade **402**/port **404** combination to transmit the processed packet, then network processor **403**A may forward the processed packet to switch fabric **401** which may then direct the processed packet to blade **402**B/port **404**D.

[**0047**] It is noted that method **500** may be executed in a different order presented and that the order presented in the discussion of **FIG. 5** is illustrative. It is further noted that certain steps in **FIG. 5** may be executed almost concurrently.

[**0048**] Although the system, computer program product and method are described in connection with several embodiments, it is not intended to be limited to the specific forms set forth herein; but on the contrary, it is intended to cover such alternatives, modifications and equivalents, as can be reasonably included within the spirit and scope of the invention as defined by the appended claims. It is noted that the headings are used only for organizational purposes and not meant to limit the scope of the description or claims.

1. A method for routing packets comprising the steps of:

mapping a plurality of physical ports into a logical interface to a network device, wherein said plurality of physical ports are connected to one or more processors, wherein said one or more processors are configured to process packets of data;

receiving a packet of data; and

transmitting said received packet of data to one of said plurality of physical ports of said logical interface.

2. The method as recited in claim 1 further comprising the step of:

indexing a first table to determine a second table associated with said logical interface.

3. The method as recited in claim 2, wherein said first table is indexed using a destination address of said received packet.

4. The method as recited in claim 2 further comprising the steps of:

performing a hash function on said received packet to generate a hash value;

indexing into said second table using said generated hash value; and

identifying one of said plurality of ports to transmit said received packet from said second table using said generated hash value.

5. The method as recited in claim 4, wherein a blade is identified from said second table using said generated hash value.

6. The method as recited in claim 4, wherein said hash function is performed on a source address and a destination address of said received packet to generate said hash value.

7. A computer program product embodied in a machine readable medium for routing packets comprising the programming steps of:

mapping a plurality of physical ports into a logical interface to a network device, wherein said plurality of physical ports are connected to one or more processors, wherein said one or more processors are configured to process packets of data;

receiving a packet of data; and

transmitting said received packet of data to one of said plurality of physical ports of said logical interface.

8. The computer program product as recited in claim 7 further comprising the programming step of:

indexing a first table to determine a second table associated with said logical interface.

9. The computer program product as recited in claim 8, wherein said first table is indexed using a destination address of said received packet.

10. The computer program product as recited in claim 8 further comprising the programming steps of:

performing a hash function on said received packet to generate a hash value;

indexing into said second table using said generated hash value; and

identifying one of said plurality of ports to transmit said received packet from said second table using said generated hash value.

11. The computer program product as recited in claim 10, wherein a blade is identified from said second table using said generated hash value.

12. The computer program product as recited in claim 10, wherein said hash function is performed on a source address and a destination address of said received packet to generate said hash value.

13. A network processor, comprising:

a memory unit operable for storing a computer program operable for routing packets; and

a processor coupled to said memory unit, wherein said processor, responsive to said computer program, comprises:

circuitry operable for mapping a plurality of physical ports into a logical interface to a network device, wherein said plurality of physical ports are con-

nected to one or more network processors, wherein said one or more network processors are configured to process packets of data;

circuitry operable for receiving a packet of data; and

circuitry operable for transmitting said received packet of data to one of said plurality of physical ports of said logical interface.

14. The system as recited in claim 13, wherein said processor further comprises:

circuitry operable for indexing a first table to determine a second table associated with said logical interface.

15. The system as recited in claim 14, wherein said first table is indexed using a destination address of said received packet.

16. The system as recited in claim 14, wherein said processor further comprises:

circuitry operable for performing a hash function on said received packet to generate a hash value;

circuitry operable for indexing into said second table using said generated hash value; and

circuitry operable for identifying one of said plurality of ports to transmit said received packet from said second table using said generated hash value.

17. The system as recited in claim 16, wherein a blade is identified from said second table using said generated hash value.

18. The system as recited in claim 16, wherein said hash function is performed on a source address and a destination address of said received packet to generate said hash value.

19. A system, comprising:

a plurality of blades; and

a switch fabric coupled to said plurality of blades, wherein said switch fabric is configured to direct incoming packets of data to particular blades;

wherein each of said plurality of blades comprises:

a first processor, wherein said first processor is configured to process packets of data; and

one or more ports coupled to said first processor, wherein said one or more ports are configured to transmit processed packets of data;

wherein said first processor comprises:

a memory unit operable for storing a computer program operable for routing packets; and

a second processor coupled to said memory unit, wherein said second processor, responsive to said computer program, comprises:

circuitry operable for mapping a plurality of ports of one or more blades into a logical interface to a network device;

circuitry operable for receiving a packet of data; and

circuitry operable for transmitting said received packet of data to one of said plurality of physical ports of said logical interface.

20. The system as recited in claim 19, wherein said second processor further comprises:

circuitry operable for indexing a first table to determine a second table associated with said logical interface.

21. The system as recited in claim 20, wherein said first table is indexed using a destination address of said received packet.

22. The system as recited in claim 20, wherein said second processor further comprises:

circuitry operable for performing a hash function on said received packet to generate a hash value;

circuitry operable for indexing into said second table using said generated hash value; and

circuitry operable for identifying one of said plurality of ports to transmit said received packet from said second table using said generated hash value.

23. The system as recited in claim 22, wherein a blade is identified from said second table using said generated hash value.

24. The system as recited in claim 22, wherein said hash function is performed on a source address and a destination address of said received packet to generate said hash value.

* * * * *