US007624142B2

(12) **United States Patent**
Jungck

(10) **Patent No.: US 7,624,142 B2**
(45) **Date of Patent: Nov. 24, 2009**

(54) **SYSTEM AND METHOD FOR PROCESSING PACKETS ACCORDING TO USER SPECIFIED RULES GOVERNED BY A SYNTAX**

(75) Inventor: **Peder J. Jungck**, San Carlos, CA (US)

(73) Assignee: **Cloudshield Technologies, Inc.**, Sunnyvale, CA (US)

(*) Notice: Subject to any disclaimer, the term of this patent is extended or adjusted under 35 U.S.C. 154(b) by 708 days.

(21) Appl. No.: **11/188,260**

(22) Filed: **Jul. 22, 2005**

(65) **Prior Publication Data**

US 2006/0020715 A1 Jan. 26, 2006

Related U.S. Application Data

(63) Continuation of application No. 09/858,309, filed on May 15, 2001, now Pat. No. 7,032,031, which is a continuation-in-part of application No. 09/602,129, filed on Jun. 23, 2000, now Pat. No. 6,829,654.

(51) **Int. Cl.**
G06F 15/16 (2006.01)

(52) **U.S. Cl.** **709/201**; 709/202; 709/238

(58) **Field of Classification Search** 709/201–203, 709/238

See application file for complete search history.

(56) **References Cited**

U.S. PATENT DOCUMENTS

4,692,918 A 9/1987 Elliott et al. 370/401
5,179,556 A 1/1993 Turner 370/233
5,195,181 A 3/1993 Bryant et al. 709/215
5,566,170 A 10/1996 Bakke et al. 370/392
5,619,621 A 4/1997 Puckett

(Continued)

FOREIGN PATENT DOCUMENTS

EP 0 865 180 A2 3/1998

(Continued)

OTHER PUBLICATIONS

John Pescatore, Gartner Analyst, "Commentary: Digging into the DNS foundation," obtained at internet address, http://news.cnet.com/news/0-1005-202-2080091.html, Jun. 15, 2000.

(Continued)

Primary Examiner—Phuoc Nguyen
(74) *Attorney, Agent, or Firm*—James L. Katz; Brinks Hofer Gilson & Lione

(57) **ABSTRACT**

An apparatus and method for enhancing the infrastructure of a network such as the Internet is disclosed. A packet interceptor/processor apparatus is coupled with the network so as to be able to intercept and process packets flowing over the network. Further, the apparatus provides external connectivity to other devices that wish to intercept packets as well. The apparatus applies one or more rules to the intercepted packets which execute one or more functions on a dynamically specified portion of the packet and take one or more actions with the packets. The apparatus is capable of analyzing any portion of the packet including the header and payload. Actions include releasing the packet unmodified, deleting the packet, modifying the packet, logging/storing information about the packet or forwarding the packet to an external device for subsequent processing. Further, the rules may be dynamically modified by the external devices.

25 Claims, 9 Drawing Sheets

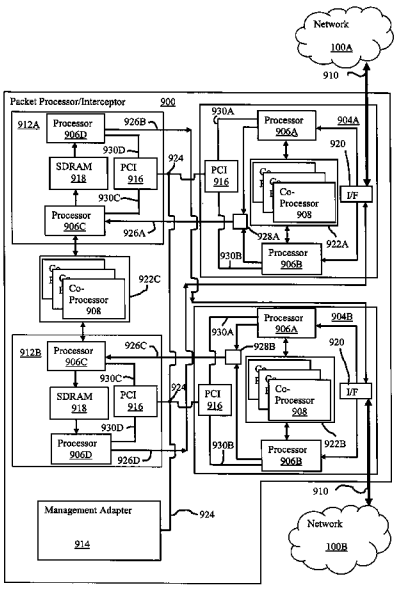

U.S. PATENT DOCUMENTS

5,784,582	A	7/1998	Hughes	710/117
5,787,253	A *	7/1998	McCreery et al.	709/231
5,805,820	A	9/1998	Bellovin et al.	395/200.55
5,867,704	A	2/1999	Tanaka et al.	718/105
5,938,737	A	8/1999	Smallcomb et al.	709/247
5,953,503	A	9/1999	Mitzenmacher et al.	395/200.33
5,983,270	A *	11/1999	Abraham et al.	709/224
5,991,713	A	11/1999	Unger et al.	704/9
5,996,011	A	11/1999	Humes	
6,006,264	A	12/1999	Colby et al.	709/26
6,014,660	A	1/2000	Lim et al.	707/3
6,016,512	A	1/2000	Huitema	709/245
6,029,175	A	2/2000	Chow et al.	707/104.1
6,046,980	A	4/2000	Packer	370/230
6,052,718	A	4/2000	Gifford	709/219
6,064,676	A	5/2000	Slattery et al.	
6,065,055	A	5/2000	Hughes et al.	709/229
6,070,191	A	5/2000	Narendran et al.	709/226
6,073,168	A	6/2000	Mighdoll et al.	709/217
6,084,878	A	7/2000	Crayford et al.	370/389
6,105,027	A	8/2000	Schneider et al.	707/9
6,108,703	A	8/2000	Leighton et al.	709/226
6,119,165	A	9/2000	Li et al.	
6,157,955	A	12/2000	Narad et al.	
6,167,438	A	12/2000	Yates et al.	709/216
6,178,505	B1	1/2001	Schneider et al.	713/168
6,182,148	B1	1/2001	Tout	
6,185,598	B1	2/2001	Farber et al.	
6,226,642	B1	5/2001	Beranek et al.	707/10
6,247,059	B1	6/2001	Johnson et al.	709/237
6,256,671	B1	7/2001	Strentzsch et al.	709/227
6,256,739	B1	7/2001	Skopp et al.	713/201
6,279,001	B1 *	8/2001	DeBettencourt et al.	709/217
6,285,679	B1	9/2001	Dally et al.	
6,324,582	B1	11/2001	Sridhar et al.	
6,324,585	B1	11/2001	Zhang et al.	
6,330,561	B1	12/2001	Cohen et al.	707/10
6,330,590	B1 *	12/2001	Cotten	709/206
6,389,462	B1	5/2002	Cohen et al.	709/218
6,389,468	B1	5/2002	Muller et al.	
6,393,026	B1	5/2002	Irwin	
6,397,259	B1	5/2002	Lincke et al.	709/236
6,408,336	B1	6/2002	Schneider et al.	709/229
6,424,658	B1	7/2002	Mathur	370/429
6,425,003	B1	7/2002	Herzog et al.	
6,453,327	B1 *	9/2002	Nielsen	709/206
6,453,335	B1	9/2002	Kaufmann	
6,460,050	B1 *	10/2002	Pace et al.	709/206
6,480,508	B1	11/2002	Mwikalo et al.	
6,502,135	B1	12/2002	Munger et al.	709/225
6,505,236	B1 *	1/2003	Pollack	709/206
6,526,426	B1	2/2003	Lakritz	715/536
6,535,518	B1	3/2003	Hu et al.	370/401
6,546,423	B1	4/2003	Dutta et al.	709/225
6,560,227	B1	5/2003	Bartoldus et al.	370/390
6,574,666	B1	6/2003	Dutta et al.	709/227
6,578,073	B1	6/2003	Starnes et al.	709/219
6,581,090	B1	6/2003	Lindbo et al.	
6,587,466	B1	7/2003	Bhattacharya et al.	370/395.21
6,598,034	B1 *	7/2003	Kloth	709/223
6,604,143	B1	8/2003	Nagar et al.	
6,606,710	B2	8/2003	Krishnan et al.	713/201
6,611,875	B1	8/2003	Chopra et al.	709/245
6,625,166	B2	9/2003	Tsukamoto et al.	
6,654,787	B1	11/2003	Aronson et al.	
6,662,213	B1	12/2003	Xie et al.	709/206
6,691,124	B2	2/2004	Gupta et al.	707/101
6,691,231	B1	2/2004	Lloyd et al.	
6,728,885	B1	4/2004	Taylor et al.	713/201
6,768,992	B1	7/2004	Jolitz	707/6
6,772,347	B1	8/2004	Xie et al.	713/201
6,785,728	B1	8/2004	Schneider et al.	709/229
6,826,694	B1	11/2004	Dutta et al.	713/201
6,829,654	B1	12/2004	Jungck	
6,847,989	B1	1/2005	Chastain et al.	709/207
6,850,529	B1	2/2005	Wong	370/401
6,854,063	B1	2/2005	Qu et al.	713/201
6,950,947	B1	9/2005	Purtell et al.	
6,973,084	B1	12/2005	Jha	
7,020,700	B1	3/2006	Bennett et al.	
7,032,031	B2	4/2006	Jungck et al.	
7,069,249	B2	6/2006	Stolfo et al.	
7,114,008	B2	9/2006	Jungck et al.	
7,146,505	B1	12/2006	Harada et al.	
7,246,150	B1	7/2007	Donoho et al.	
7,346,649	B1	3/2008	Wong	
2001/0039579	A1 *	11/2001	Trcka et al.	709/224
2002/0065938	A1	5/2002	Jungck et al.	709/246
2002/0112073	A1	8/2002	MeLampy et al.	709/240
2002/0194291	A1	12/2002	Jungck et al.	709/213
2003/0009651	A1	1/2003	Najam et al.	712/34
2003/0018796	A1	1/2003	Chou et al.	709/231
2003/0187992	A1	10/2003	Steenfeldt et al.	
2006/0029038	A1	2/2006	Jungck	
2006/0029104	A1 *	2/2006	Jungck	370/498

FOREIGN PATENT DOCUMENTS

WO	WO 98/17039	4/1998
WO	WO 99/05584	2/1999
WO	WO 99/09725	2/1999
WO	WO 99/27684	6/1999
WO	WO 99/60459	11/1999
WO	WO 00/14938	3/2000
WO	WO 00/27092	5/2000
WO	WO 00/28713	5/2000

OTHER PUBLICATIONS

Rainbow Technologies Products, "CryptoSwift eCommerce Accelerator," obtained at internet address, http://isg.rainbow.com/products/cs_1.html, Aug. 5, 2000.

FlowWise Networks, Inc., "AutoRoute™ Automatic Configuration of Layer 3 Routing," www.flowwise.com, Apr. 2000.

FlowWise, "Router Accelerator—RA 7000 from FlowWise," obtained at internet address http://www.flowwise.com/products/ra7000.htm, 1999.

Intel® IXP1200 Network Processor, obtained at internet address, http://developer.intel.com/design/network/ixp1200.htm, Feb. 2000.

Marshall Brain, How Stuff Works, "How Web Servers and the Internet Work," obtained at Internet address http://www.howstuffworks.com/web-server.htm, May 1999.

Marshall Brain, How Stuff Works, "How Domain Name Servers Work," obtained at internet address http://www.howstuffworks.com/dns.htm, Jun. 1998.

Curt Franklin, How Stuff Works, "How Routers Work," obtained at internet address http://www.howstuffworks.com/router.htm, Sep. 1999.

Microsoft Corporation, Sep. 1998 "Introduction to TCP/IP," obtained at internet address http://msdn.microsoft.com/library/backgrnd/html/tcpipintro.htm, 1999.

Robert Stone, "CenterTrack: An IP Overlay Network for Tracking DoS Floods," Article Oct. 1, 1999, pp. 1-9.

Chapter 1 TCP/IP Fundamentals, obtained at internet address http://webdocs.sequent.com/docs/tcpoac01/ch_1.htm, pp. 1-28, Aug. 1998.

Cheng Wu, "Web Switching: A New Generation of Networking," pp. 1-3.

ArrowPoint Communications™ Article, "A Comparative Analysis of Web Switching Architectures," pp. 1-11, Feb. 2000.

ArrowPoint Communications™, Brochure, "The Top 12 Benefits of Content Intelligence,", 1999.

L. Peter Deutsch, "Deflate Compressed Data Format Specification," May 1996.

Antaeus Feldspar, Article, "An Explanation of the Deflate Algorithm," Sep. 11, 1997.
ArrowPoint Communications™ CDDCenter Vendor Listing, "ArrowPoint CS-50 Highlights" obtained at internet address http://www.cddcenter.com/arrowpoint.htm, May 21, 2000.
Peter Christy, Analyst Commentary, "When to Distribute Content—The Peters' Principles," obtained at internet address http://www.cddcenter.com/index.html, May 21, 2000.
Content Delivery 101: An Introduction to Content Distribution & Delivery, 1998.
CDDCenter, "How Do Caching and Content Deliver Really Differ?" obtained at internet address http://www.cddcenter.com/cachingvcontent.htm, pp. 1-14, May 21, 2000.
Internet Research Group "Infrastructure Application Service Providers," Feb. 2000, pp. 1-7.
Peter Christy, Internet Research Group "Content Delivery Architectures: Why Doesn't One Size Fit All?" pp. 1-12, Apr. 2000.
Steven Vonder Haar, *Inter@ctive* Week, Feb. 14, 2000, "Content Delivery Shifts To Edge of Net," obtained at internet address http://www.zdnet.com/intweek/stories/news/0,4164,2436865,00.html, Dated May 22, 2000.
David Willis, Network Computing, "The Content-Delivery Edge," obtained at internet address http://www.networkcomputing.com/1103/1103colwillis.html, Dated May 22, 2000.
Phrack Magazine, "IP-spoofing Demystified (Trust-Relationship Exploitation)" vol. Seven, Issue Forty-Eight, File 14 of 18. pp. 1-9, obtained at internet address http://www.fc.net/phrack/files/p48/p48-14.html, Dated Jun. 5, 2000.
Eddie Mission, "What is Eddie?", obtained at internet address http://www.eddieware.org/what.html, Dated Apr. 21, 2000.
Cisco Enterprise Solutions, "Quality of Service," obtained at internet address http://www.cisco.com/warp/public/779/largeent/learn/technologies/qos/, Jan. 2000.
Cisco White Paper, "Delivering End-to-End Security in Policy-Based Networks," obtained at internet address, http://www.cisco.com/warp/public/cc/pd/nemnsw/cap/tech/deesp_wp.htm, Jul. 1999.
Technology Packeteer, obtained at internet address, http://www.packeteer.com/technology/index.cfm, Mar. 1999.
Overview Cisco Content Networking, obtained at internet address http://www.cisco.com/warp/public/cc/so/neso/ienesv/cxne/ccnov_ov.htm, Oct. 1999.
Overview Cisco Secure Policy Manager 2.0, obtained at internet address http://www.cisco.com/warp/public/cc/pd/sqsw/sqppmn/prodlit/secmn_ov.htm, Nov. 1999.
Alteon Web Systems, White Paper "Optimizing ISP Networks and Services with DNS Redirection," Aug. 1999.
Alteon Web Systems, White Paper "Virtual Matrix Architecture Scaling Web Services for Performance and Capacity," Apr. 2000.
Alteon Web Systems, White Paper, Questions and Answers, pp. 1-3.
3Com Technical Papers, Layer 3 Switching, May 1998.
Web Cache Communication Protocol Version 2, pp. C-1 to C-54, Jun. 2000.
RFC2267 Working Group- Denial of Service Counter Measures, Tele-conference Meeting Aug. 25, 2000, Moderator, Henry Teng of eBay.
Track-back Architecture General Requirements Version 0.1, Initial Draft submitted to Counter-DoS Solutions Working Group, Jul. 31, 2000, Edited by Bob Geiger, Recourse Technologies.
SwitchOn Networks, Inc., ClassiPI™ At-a-Glance, 1999.
C-Port™ A Motorola Company, C-5™ Digital Communications Processor, Product Brief, pp. 1-8, May 4, 2000.
Peder Jungck, "Building a Faster Cache Server" A Theoretical Whitepaper, Silicon Valley Internet Capital, pp. 1-19, Dec. 1999.
IXF1002 Dual Port Gigabit Ethernet MAC, Product Brief, Level One™ an Intel Company, 2000.
NetLogic Microsystems Product Overview.
Agere, Inc. "The Challenge for Next Generation Network Processors", Sep. 10, 1999.
Philips Semiconductors' VMS747 Security Processor Overview, 2000.
Cisco Systems, Cisco 12000 Series GSR, "Performing Internet Routing and Switching at Gigabit Speeds," obtained at internet address, http://www.cisco.com/warp/public/cc/pd/rt/12000/, Jul. 2000.
Cisco Systems, "Cisco 10000 Edge Service Router," obtained at internet address, http://www.cisco.com/warp/public/cc/pd/rt/10000/, Feb. 2000.
Nortel Networks™ "Passport 8600 Routing Switch," obtained at internet address, http://www.nortelnetworks.com/products/01/passport/8600/index.html, Jun. 1999.
Lucent Technologies, "InterNetworking Systems," obtained at internet address, http://www.lucent.com/ins/products/grf/, May 1999.
Lucent Technologies, "InterNetworking Systems," obtained at internet address, http://www.lucent.com/ins/products/grf/grf1600.html, Feb. 2000.
Juniper Networks, "M20 Internet Backbone Router," Datasheet, obtained at internet address, http://www.juniper.net/products/dsheet/100009.html, Jan. 2000.
Juniper Networks, "M40 Internet Backgbone Router," Datasheet, obtained at internet address, http://www.juniper.net/products/dsheet/100001.html, Mar. 2000.
Juniper Networks, Inc., "M160 Internet Backbone Router" Datasheet, obtained at internet address, http://www.juniper.net/products/dsheet/10012, Apr. 2000.
Rajeev Kumar, Intel Confidential, "IXP1200 Overview".
Intel "IXP1200 Network Processor," Datasheet, pp. 1-109 (out of 146 pages), May 2000.
Cisco 7500 Series Routers, pp. 1-2, obtained at internet address http://www.cisco.com/warp/public/cc/pd/rt/7500/, 2000.
Philips Semiconductors—I2C-bus, News and Events, obtained at internet address, http://www.semiconductors.philips.comi2c/, Jul. 28, 2001.
Comnet Booth #4421 "VHB Technologies Introduces Breakthrough Appliance for High-Bandwidth Networks at Comnet" News Release, Jan. 29, 2001, VHB Technologies, Inc., Richardson, Texas.
VHB Technologies, Inc. presents "The VIPRE™ NPU,", 1999.
VHB Technolgies News & Views, "Pioneering Gigabit-Speed Content-Intelligent Appliances", 2000.
VHB Technologies, A Security Technology Paper, Defending Against Denial-of-Service Attacks with the . . . VHB-2000 Network Security Appliance, 2000.
Netlogic Microsystems™ Product Brief, obtained at internet address, http://www.netlogicmicro.com/html/datasheets/nse3128.html, pp. 1-2, May 11, 2001.
Switch on Networks, Inc. "ClassiPl" Content Co-Processor, general content and features brochure, pp. 1-5, Jun, 2000.
C-Port, "C-5™ Digital Communications Processor" Product Brief, pp. 1-8, © 1999-2000 C-Port Corporation, May 4, 2000.
NetLogic Microsystems™ "Policy Co-Processor™" applications and features sheet, p. 1, 2000.
NetLogic Microsystems™ "CIDR Co-Processor™" applications and features sheet, p. 1-2, 2000.
NetLogic Microsystems ™ "IPCAM® Ternary CAM" application and features sheets, pp. 1-2, 2000.
NetLogic Microsystems ™ "SynCAM® Binary CAM" application and features sheet, p. 1, 2000.
NetLogic Microsystems ™ "NCAM Binary CAM" application and features sheet, p. 1, 2000.
NetLogic Microsystems ™ product overview, pp. 1-2, 2000.
Level One™ an Intel Company "IXF1002 Dual Port Gigabit Ethernet MAC," product brief, pp. 1-2, Copyright © 2000 Level One Communications, Inc, Nov. 1999.
Agere, Inc., Agere White Paper, "Building Next Generation Network Processors," Sep. 10, 1999, pp. 1-8.
Eric J. Rothfus, Agere, Inc., Agere White Paper, "The Case for A Classification Language," Sep. 10 ,1999, pp. 1-7.
Philips "VMS747 Security Processor," Overview and Features, pp. 1-3, date of release Jan. 2000, © Philips Electronics N.V. 1999.
Web Cache Communication Protocol Version 2, Appendix C, Cisco Cache Engine User Guide, Version 2.0.0, pp. C1-C54.
CloudShield Technologies, Inc., White Paper, "Security at Optical Speed," pp. 1-10, Jan. 21, 2001.
NetLogic Microsystems™ Product Brief "NSE3128 Network Search Engine," obtained at internet address http://209.10.226.214/html/datasheets/nse3128.html pp. 1-2, May 11, 2001.

Listing of Well Known Port Numbers assigned by the Internet Assigned Numbers Authority, obtained at the internet address , http://www.iana.org/assignments/port-numbers pp. 1-55, Aug. 5, 2000.
PM2329 PMC-Sierra, "ClassiPI™ Network Classification Processor," Overview and Features sheet pp. 1-2, 2001 Copyright PMC-Sierra, Inc. Jan. 2001.
3com Virtual Lan Tutorial, obtained from http://munshi.sonoma.edu/s97/bus420/vlan.html, Jul. 21, 2003, pp. 1-21.
Przygienda and Droz, Abstract "Proxy PNNI Augmented Routing (Proxy PAR)", pp. 371-377, © 1998 IEEE.
Stevenson and Julin, Abstract, "Client-Server Interactions in Multi-Server Operating," Sep. 1994, 16 pages.
JISC JTAP Report "Network Delivery of High Quality MPEG-2 Digital Video," Oct. 1998, 58 pages.
Integrating Java-based Mobile Agents into Web Servers under..—Fünfrocken (1998); www.isa.informatik.tu-darmstadt.de/VS/Publikationen/Fuenfrocken/papers/hicss98-wasp.ps.
Adaptive Scheduling with Client Resources to Improve WWW..—Andresen, Yang (1996); www.cs.ucsb.edu/TRs/techreports/TRCS96-27.ps.
Enabling the Internet to Deliver Content-Oriented Services—Beck, Hofmann (2001); www.cs.bu.edu/techreports/2001-017-wcw01-proceedings/107_beck.pdf.
System Design Issues for Internet Middleware Services: Deductions..—Gribble (1997) http.cs.berkeley.edu/~gribble/papers/msc_thesis.ps.gz.
Implementing a Secure rlogin Environment: A Case Study of ..—Kim, Orman, O'Malley (1995) ftp.cs.arizona.edu/xkernel/Papers/rlogin.ps.
A Hierarchical Mobility Management Scheme for IPv6—Claude Castelluccia ballesta.inrialpes.fr/infos/Personnes/Claude.Castelluccia/iscc98.ps.gz, 1999.
Corpus-Based Learning of Compound Noun Indexing—Ung-Kwan Jee Hyub (2000) www.ai.mit.edu/people/jimmylin/papers/Kwak00.pdf.
The Role of Test Cases in Automated Knowledge Refinement—Palmer, Craw (1996) www.scms.rgu.ac.uk/publications/96/96_4.ps.gz.
The Policy Obstacle Course: The Realisation of Low-Level..—Schema York Jul. 1998 www.cs.york.ac.uk/~jdm/pubs/polobstc.ps.Z.
Data Filter Architecture Pattern Robert Flanders and Eduardo ..—Dept of Computer jerry.cs.uiuc.edu/~plop/plop99/proceedings/Fernandez5/Flanders3.PDF, 1998.
FlowWise Networks, Inc., "AutoRoute™ Automatic Configuration of Layer 3 Routing," www.flowwise.com, 1998.
FlowWise, "Router Accelerator—RA 7000 from FlowWise," obtained at internet address http://www.flowise.com/products/ra7000.htm, 1999.
Intel® IXP1200 Network Processor, obtained at internet address, http://developer.intel.com/design/network/ixp1200.htm, Jun. 1999.
Marshall Brain, How Stuff Works, "How Web Servers and the Internet Work," obtained at internet address http://www.howstuffworks.com/web-server.htm, Apr. 2000.
Marshall Brain, How Stuff Works, "How Domain Name Servers Work," obtained at internet address http://www.howstuffworks.com/dns.htm, Apr. 2000.
Curt Franklin, How Stuff Works, "How Routers Work," obtained at internet address http://www.howstuffworks.com/router.htm, 1999.
Microsoft Corporation, Sep. 1998 "Introduction to TCP/IP," obtained at internet address http://msdn.microsoft.com/library/backgrnd/html/tcpipintro.htm, 2000.
Chapter 1 TCP/IP Fundamentals, obtained at internet address http://webdocs.sequent.com/docs/tcpoac01/ch_1.htm, pp. 1-28, 1998.
ArrowPoint Communications™ Article, "A Comparative Analysis of Web Switching Architectures,", pp. 1-11, 2000.
ArrowPoint Communications™, Brochure, "The Top 12 Benefits of Content Intelligence," 1997.
Content Delivery 101: An Introduction to Content Distribution & Delivery.
Peter Christy, Internet Research Group "Content Delivery Architectures: Why Doesn't One Size Fit All?" pp. 1-12, Jun. 2000.
Steven Vonder Haar, *Inter@ctive* Week, Feb. 14, 2000, "Content Delivery Shifts To Edge of Net," obtained at internet address http://www.zdnet.com/intweek/stories/news/0,4164,2436865,00.html, Dated May 22, 2000.
David Willis, Network Computing, "The Content-Delivery Edge," obtained at internet address http://www.networkcomputing.com/1103/1103colwillis.html, Dated May 22, 2000.
Phrack Magazine, "IP-spoofing Demystified (Trust-Relationship Exploitation)" vol. Seven, Issue Forty-Eight, File 14 of 18. pp. 1-9, obtained at internet address http//www.fc.net/phrack/files/p48/p48-14.html, Dated Jun. 5, 2000.
Eddie Mission, "What is Eddie?", obtained at internet address http://www.eddieware.org/what.html, Dated Apr. 21, 2000.
Cisco Enterprise Solutions, "Quality of Service," obtained at internet address http//www.cisco.com/warp/public/779/largeent/learn/technologies/qos/, 1999.
Cisco White Paper, "Delivering End-to-End Security in Policy-Based Networks," obtained at internet address, http://www.cisco.com/warp/public/cc/pd/nemnsw/cap/tech/deesp_wp.htm, 1999.
Technology Packeteer, obtained at internet address, http://www.packeteer.com/technology/index.cfm, 1997.
Overview Cisco Content Networking, obtained at internet address http://www.cisco.com/warp/public/cc/so/neso/ienesv/cxne/ccnov_ov.htm, 1999.
Overview Cisco Secure Policy Manager 2.0, obtained at internet address http://www.cisco.com/warp/public/cc/pd/sqsw/sqppmn/prodlit/secmn_ov.htm, 2000.
Alteon Web Systems, White Paper "Optimizing ISP Networks and Services with DNS Redirection," Aug. 1999.
Alteon Web Systems, White Paper "Virtual Matrix Architecture Scaling Web Services for Performance and Capacity," Apr. 2000.
Alteon Web Systems, White Paper, Questions and Answers, pp. 1-3.
Web Cache Communication Protocol Version 2, pp. C-1 to C-54, 2000.
RFC2267 Working Group- Denial of Service Counter Measures, Tele-conference Meeting Aug. 25, 2000, Moderator, Henry Teng of eBay.
Track-back Architecture General Requirements Version 0.1, Initial Draft submitted to Counter-DoS Solutions Working Group, Jul. 31, 2000, Edited by Bob Geiger, Recourse Technologies.
SwitchOn Networks, Inc., ClassiPI™ At-a-Glance, 1999.
CPort™ A Motorola Company, C-5™ Digital Communications Processor, Product Brief, pp. 1-8, May 4, 2000.
Peder Jungck, "Building a Faster Cache Server" A Theoretical Whitepaper, Silicon Valley Internet Capital, pp. 1-19, Jun. 1999.
IXF1002 Dual Port Gigabit Ethernet MAC, Product Brief, Level One™ an Intel Company, 1999.
NetLogic Microsystems Product Overview.
Agere, Inc. "The Challenge for Next Generation Network Processors", Sep. 10, 1999.
Philips Semiconductors' VMS747 Security Processor Overview, 1998.
Cisco Systems, Cisco 12000 Series GSR, "Performing Internet Routing and Switching at Gigabit Speeds," obtained at internet address, http://www.cisco.com/warp/public/cc/pd/rt/12000/, Jan. 2000.
Cisco Systems, "Cisco 10000 Edge Service Router," obtained at internet address, http://www.cisco.com/warp/public/cc/pd/rt/10000/, Aug. 1999.
Nortel Networks™ "Passport 8600 Routing Switch," obtained at internet address http://www.nortelnetworks.com/products/01/passport/8600/index.html, 1998.
Lucent Technologies, "InterNetworking Systems," obtained at internet address, http://www.lucent.com/ins/products/grf/, 1999.
Lucent Technologies, "InterNetworking Systems," obtained at internet address, http://www.lucent.com/ins/products/grf/grf1600.html, 1999.
Juniper Networks, "M20 Internet Backbone Router," Datasheet, obtained at internet address, http://www.juniper.net/products/dsheet/100009.html, 2000.
Juniper Networks, "M40 Internet Backgbone Router," Datasheet, obtained at internet address, http://www.juniper.net/products/dsheet/100001.html, 2000.

Juniper Networks, Inc., "M160 Internet Backbone Router" Datasheet, obtained at internet address, http://www.juniper.net/products/dsheet/10012, 2000.
Intel "IXP1200 Network Processor," Datasheet, pp. 1-109 (out of 146 pages), May 2000.
Cisco 7500 Series Routers, pp. 1-2, obtained at internet address http://www.cisco.com/warp/public/cc/pd/rt/7500/, 1998.
Philips Semiconductors—I2C-bus, News and Events, obtained at internet address, http://www.semiconductors.philips.comi2c/, Jul. 28, 2001.
Comnet Booth #4421 "VHB Technologies Introduces Breakthrough Appliance for High-Bandwidth Networks at Comnet" News Release, Jan. 29, 2001, VHB Technologies, Inc., Richardson, Texas.
VHB Technologies, Inc. presents "The VIPRE™ NPU.", 1998.
VHB Technologies News & Views, "Pioneering Gigabit-Speed Content-Intelligent Appliances", 2000.
VHB Technologies, A Security Technology Paper, Defending Against Denial-of-Service Attacks with the . . . VHB-2000 Network Security Appliance, 2000.
Netlogic Microsystems™ Product Brief, obtained at internet address, http://www.netlogicmicro.com/html/datasheets/nse3128.html, pp. 1-2, May 11, 2001.
Switch On Networks, Inc. "ClassiPl" Content Co-Processor, general content and features brochure, pp. 1-5, 1999.
C-Port, "C5™ Digital Communications Processor" Product Brief, pp. 1-8, © 1999-2000 C-Port Corporation, May 4, 2000.
NetLogic Microsystems™ "Policy CoProcessor™" applications and features sheet, p. 1, 2000.
NetLogic Microsystems™ "CIDR CoProcessor™" applications and features sheet, p. 1, 2000.
NetLogic Microsystems™ "IPCAM200 Ternary CAM" application and features sheets, pp. 1-2, 2000.
NetLogic Microsystems™ " SYNCAM® Binary CAM" application and features sheet, p. 1, 2000.
NetLogic Microsystems™ "NCAM Binary CAM" application and features sheet, p. 1, 2000.
Level One™ an Intel Company "IXF1002 Dual Port Gigabit Ethernet MAC," product brief, pp. 1-2, Copyright © 2000 Level One Communications, Inc.
Agere, Inc., Agere White Paper, "Building Next Generation Network Processors," Sep. 10, 1999, pp. 1-8.
Eric J. Rothfus, Agere, Inc., Agere White Paper, "The Case for A Classification Language," Sep. 10, 1999, pp. 1-7.
Philips "VMS747 Security Processor," Overview and Features, pp. 1-3, date of release Jan. 2000, © Philips Electronics N.V. 1999.
Web Cache Communication Protocol Version 2, Appendix C, Cisco Cache Engine User Guide, Version 2.0.0, pp. C1-C54, 1999.
CloudShield Technologies, Inc., White Paper, "Security at Optical Speed," pp. 1-10, Jan. 21, 2001.
NetLogic Microsystems™ Product Brief "NSE3128 Network Search Engine," obtained at internet address http://209.10.226.214/html/datasheets/nse3128.html pp. 1-2, May 11, 2001.
Listing of Well Known Port Numbers assigned by the Internet Assigned Numbers Authority, obtained at the internet address , http://www.iana.org/assignments/port-numbers pp. 1-55, Aug. 5, 2000.
PM2329 PMC-Sierra, "ClassiPI™ Network Classification Processor," Overview and Features sheet pp. 1-2, 2001 Copyright PMC-Sierra, Inc. Jan. 2001.
3com Virtual Lan Tutorial, obtained from http://munshi.sonoma.edu/s97/bus420/vlan.html, Jul. 21, 2003, pp. 1-21.
Przygienda and Droz, Abstract "Proxy PNNI Augmented Routing (Proxy PAR)", pp. 371-377, © 1998 IEEE.
Stevenson and Julin, Abstract, "Client-Server Interactions in Multi-Server Operating," Sep. 1994, 16 pages.
JISC JTAP Report "Network Delivery of High Quality MPEG-2 Digital Video," Oct. 1998, 58 pages.
Integrating Java-based Mobile Agents into Web Servers under..—Fünfrocken (1998); www.isa.informatik.tu-darmstadt.de/VS/Publikationen/Fuenfrocken/papers/hicss98-wasp.ps.
Adaptive Scheduling with Client Resources to Improve WWW..—Andresen, Yang (1996); www.cs.ucsb.edu/TRs/techreports/TRCS96-27.ps.
Enabling the Internet to Deliver Content-Oriented Services—Beck, Hofmann (2001); www.cs.bu.edu/techreports/2001-017-wcw01-proceedings/107_beck.pdf.
System Design Issues for Internet Middleware Services: Deductions..—Gribble (1997) http.cs.berkeley.edu/~gribble/papers/msc_thesis.ps.gz.
Implementing a Secure rlogin Environment: A Case Study of ..—Kim, Orman, O'Malley (1995) ftp.cs.arizona.edu/xkernel/Papers/rlogin.ps.
A Hierarchical Mobility Management Scheme for IPv6—Claude Castelluccia ballesta.inrialpes.fr/Infos/Personnes/Claude.Castelluccia/iscc98.ps.gz, 1998.
Corpus-Based Learning of Compound Noun Indexing—Ung-Kwan Jee Hyub (2000) www.ai.mit.edu/people/jimmylin/papers/Kwak00.pdf.
The Role of Test Cases in Automated Knowledge Refinement—Palmer, Craw (1996) www.scms.rgu.ac.uk/publications/96/96_4.ps.gz.
The Policy Obstacle Course: The Realisation of Low-Level..—Schema York Jul. 1998 www.cs.york.ac.uk/~jdm/pubs/polobstc.ps.Z.
Data Filter Architecture Pattern Robert Flanders and Eduardo ..—Dept of Computer jerry.cs.uiuc.edu/~plop/plop99/proceedings/Fernandez5/Flanders3.PDF, 1997.
Cisco Enterprise Solutions, "Quality of Service," obtained at internet address http://www.cisco.com/warp/public/779/largeent/learn/technologies/qos/, 1999.
Cisco White Paper, "Delivering End-to-End Security in Policy-Based Networks," obtained at internet address, http://www.cisco.com/warp/public/cc/pd/nemnsw/cap/tech/deesp_wp.htm, 2000.
Technology Packeteer, obtained at internet address, http://www.packeteer.com/technology/index.cfm, 1998.
Overview Cisco Content Networking, obtained at internet address http://www.cisco.com/warp/public/cc/so/neso/ienesv/cxne/ccnov_ov.htm, 2000.
Overview Cisco Secure Policy Manager 2.0, obtained at internet address http://www.cisco.com/warp/public/cc/pd/sqsw/sqppmn/prodlit/secmn_ov.htm, 2000.
Alteon Web Systems, White Paper "Virtual Matrix Architecture Scaling Web Services for Performance and Capacity," Apr. 2000.
Alteon Web Systems, White Paper, Questions and Answers, pp. 1-3, 1999.
Web Cache Communication Protocol Version 2, pp. C-1 to C-54, 2000.
SwitchOn Networks, Inc., ClassiPI™ At-a-Glance, 1999.
Peder Jungck, "Building a Faster Cache Server" A Theoretical Whitepaper, Silicon Valley Internet Capital, pp. 1-19, 1999.
Philips Semiconductors' VMS747 Security Processor Overview, 2001.
Cisco Systems, Cisco 12000 Series GSR, "Performing Internet Routing and Switching at Gigabit Speeds," obtained at internet address, http://www.cisco.com/warp/public/cc/pd/rt/12000/, 2000.
Cisco Systems, "Cisco 10000 Edge Service Router," obtained at internet address, http://www.cisco.com/warp/public/cc/pd/rt/10000/, 2000.
Nortel Networks™ "Passport 8600 Routing Switch," obtained at internet address, http://www.nortelnetworks.com/products/01/passport/8600/index.html, 1999.
Lucent Technologies, "InterNetworking Systems," obtained at internet address, http://www.lucent.com/ins/products/grf, 1997.
Lucent Technologies, "InterNetworking Systems," obtained at internet address, http;//www.lucent.com/ins/products/grf/grf1600.html, 1998.
Juniper Networks, "M20 Internet Backbone Router," Datasheet, obtained at internet address, http://www.juniper.net/products/dsheet/100009.html, 1999.
Juniper Networks, "M40 Internet Backgbone Router," Datasheet, obtained at internet address, http://www.juniper.net/products/dsheet/100001.html, 2000.
Juniper Networks, Inc., "M160 Internet Backbone Router" Datasheet, obtained at internet address, http://www.juniper.net/products/dsheet/10012, 2000.
Rajeev Kumar, Intel Confidential, "IXP1200 Overview", 2001.

Intel "IXP1200 Network Processor," Datasheet, pp. 1-109 (out of 146 pages), May 2000.
Cisco 7500 Series Routers, pp. 1-2, obtained at internet address http://www.cisco.com/warp/public/cc/pd/rt/7500/, 1999.
Philips Semiconductors—I2C-bus, News and Events, obtained at internet address, http://www.semiconductors.philips.comi2c/, Jul. 28, 2001.
Comnet Booth #4421 "VHB Technologies Introduces Breakthrough Appliance for High-Bandwidth Networks at Comnet" News Release, Jan. 29, 2001, VHB Technologies, Inc., Richardson, Texas.
VHB Technologies, Inc. presents "The VIPRE™ NPU," 2001.
VHB Technologies News & Views, "Pioneering Gigabit-Speed Content-Intelligent Appliances", 2001.
VHB Technologies, A Security Technology Paper, Defending Against Denial-of-Service Attacks with the . . . VHB-2000 Network Security Appliance, 2001.
Netlogic Microsystems™ Product Brief, obtained at internet address, http://www.netlogicmicro.com/html/datasheets/nse3128.html, pp. 1-2, May 11, 2001.
Switch On Networks, Inc. "ClassiPI" Content Co-Processor, general content and features brochure, pp. 1-5, 2001.
C-Port, "C-5™ Digital Communications Processor" Product Brief, pp. 1-8, © 1999-2000 C-Port Corporation, May 4, 2000.
NetLogic Microsystems™ "Policy Co-Processor™" applications and features sheet, p. 1, 2000.
NetLogic Microsystems™ "CIDR Co-Processor™" applications and features sheet, p. 1, 2000.
NetLogic Microsystems™ "IPCAM® Ternary CAM" application and feature sheets, pp. 1-2, 2000.
NetLogic Microsystems™ "SynCAM® Binary CAM" application and features sheet, p. 1, 2000.
NetLogic Microsystems™ "NCAM Binary CAM" application and featues sheet, p. 1, 2000.
NetLogic Microsystems™ product overview, pp. 1-2, 2000.
Level One™ an Intel Company "IXF1002 Dual Port Gigabit Ethernet MAC," product brief, pp. 1-2, Copyright © 2000 Level One Communications, Inc.
Agere, Inc., Agere White Paper, "Building Next Generation Network Processors," Sep. 10, 1999, pp. 1-8.
Eric J. Rothfus, Agere, Inc., Agere White Paper, "The Case for A Classification Language," Sep. 10, 1999, pp. 1-7.
Philips "VMS747 Security Processor," Overview and Features, pp. 1-3, date of release Jan. 2000, © Philips Electronics N.V. 1999.
Web Cache Communication Protocol Version 2, Appendix C, Cisco Cache Engine User Guide, Version 2.0.0, pp. C1-C54, 2000.
CloudShield Technologies, Inc., White Paper, "Security at Optical Speed," pp. 1-10, Jan. 21, 2001.
NetLogic Microsystems™ Product Brief "NSE3128 Network Search Engine," obtained at internet address http://209.10.226.214/html/datasheets/nse3128.html, pp. 1-2, May 11, 2001.
Listing of Well Known Port Numbers assigned by the Internet Assigned Numbers Authority, obtained at the internet address , http://www.iana.org/assignments/port-numbers pp. 1-55, Aug. 5, 2000.
PM2329 PMC-Sierra, "ClassiPI™ Network Classification Processor," Overview and Features sheet pp. 1-2, 2001 Copyright PMC-Sierra, Inc. Jan. 2001.
3com Virtual Lan Tutorial, obtained from http://munshi.sonoma.edu/s97/bus420/vlan.html, Jul. 21, 2003, pp. 1-21.
Przygienda and Droz, Abstract "Proxy PNNI Augmented Routing (Proxy PAR)", pp. 371-377, © 1998 IEEE.
Stevenson and Julin, Abstract, "Client-Server Interactions in Multi-Server Operating," Sep. 1994, 16 pages.
JISC JTAP Report "Network Delivery of High Quality MPEG-2 Digital Video," Oct. 1998, 58 pages.
Integrating Java-based Mobile Agents into Web Servers Under . . . —Fünfrocken (1998); www.isa.informatik.tu-darmstadt.de/VS/Publikationen/Fuenfrocken/papers/hicss98-wasp.ps.
Adaptive Scheduling with Client Resources to Improve WWW..-Andresen, Yang (1996); www.cs.ucsb.edu/TRs/techreports/TRCS96-27.ps.
Enabling the Internet to Deliver Content-Oriented Services—Beck, Hofmann (2001); www.cs.bu.edu/techreports/2001-017-wcw01-proceedings/107_beck.pdf.
Corpus-Based Leaning of Compound Noun Indexing—Ung-Kwan Kwak Jee-Hyub (2000) www.ai.mit.edu/people/jimmylin/papers/Kwak00.pdf.
The Role of Test Cases in Automated Knowledge Refinement—Palmer, Craw (1996) www.scms.rgu.ac.uk/publications/96/96_4.ps.gz.
The Policy Obstacle Course: The Realisation of Low-Level..—Schema York Jul. 1996 www.cs.york.ac.uk/~jdm/pubs/polobstc.ps.Z.
Data Filter Architecture Pattern Robert Flanders and Eduardo..—Dept of Computer jerry.cs.uiuc.edu/~plop/plop99/proceedings/Fernandez5/Flanders_3.PDF, 1997.
System Design Issues for Internet Middleware Services: Deductions..—Gribble (1997) http.cs.berkeley.edu/~gribble/papers/msc_thesis.ps.gz.
Implementing a Secure rlogin Environment: A Case Study of..—Kim, Orman, O'Malley (1995) ftp.cs.arizona.edu/xkernel/Papers/rlogin.ps.
A Hierarchical Mobility Management Scheme for Ipv6—Claude Castelluccia ballesta inrialpes.fr/Infos/Personnes/Claude.Castelluccia/iscc98/ps.gz, 1998.
Internet Research Group "Infrastructure Application Service Providers," Feb. 2000, pp. 1-7.
Peter Christy, Internet Research Group, "Content Delivery Architectures: Why Doesn't One Size Fit All?" pp. 1-12, 1999.
Steven Vonder Haar, *Inter@ctive* Week, Feb. 14, 2000, "Content Delivery Shifts To Edge of Net," obtained at internet address http://www.zdnet.com/intweek/stories/news/0,4164,2436865,00.html, Dated May 22, 2000.
Philips Semiconductors' VMS747 Security Processor Overview, 1999.
Rajeev Kumar, Intel Confidential, "IXP1200 Overview,", 1999.
VHB Technologies, Inc. presents "The VIPRE™ NPU,", 2000.
NetLogic Microsystems™ "IPCAM® Ternary CAM" application and features sheets, pp. 1-2, 2000.
NetLogic Microsystems™ "SynCAM® Binary CAM" application and features sheet, p. 1, 2000.
NetLogic Microsystems™ "NCAM Binary CAM" application and features sheet, p. 1, 2000.
NetLogic Microsystems™ product overview, pp. 1-2, 2000.
Rule-Based Filtering for Java Applets, Iglio et al., Computer Security Applications Conference, 1998, Proceedings., 14th Annual Dec. 7-11, 1998 pp. 112-119.
A Common Multi-Agent Testbed for Diverse Seamless Personal Information Networking Applications, Abu-Hakima, et al., Jul. 1998.

* cited by examiner

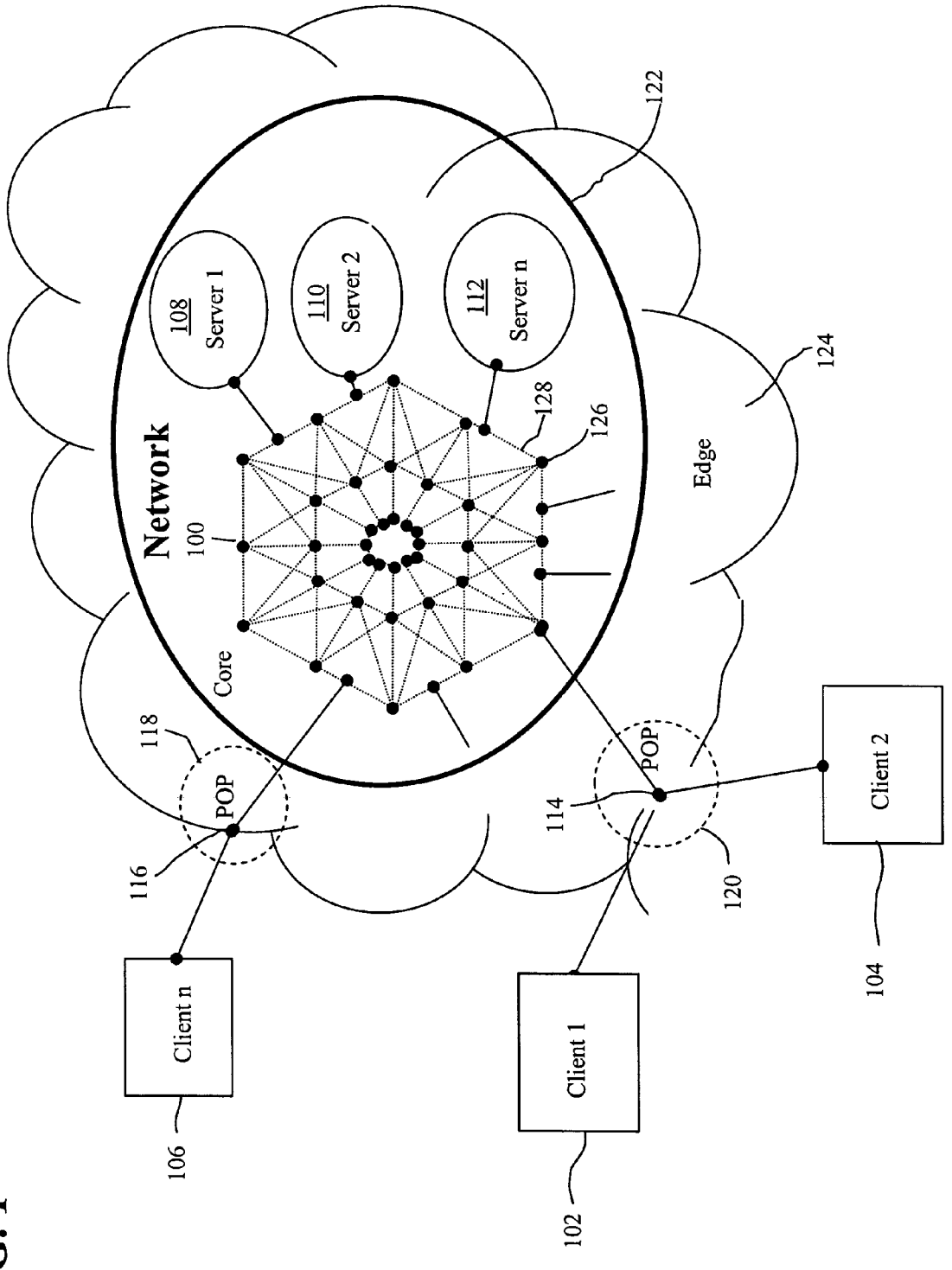
Network
100
Core
Edge
108
Server 1
110
Server 2
112
Server n
122
124
126
128
118
POP
116
114
POP
120
Client n
106
Client 1
102
Client 2
104

FIG. 1

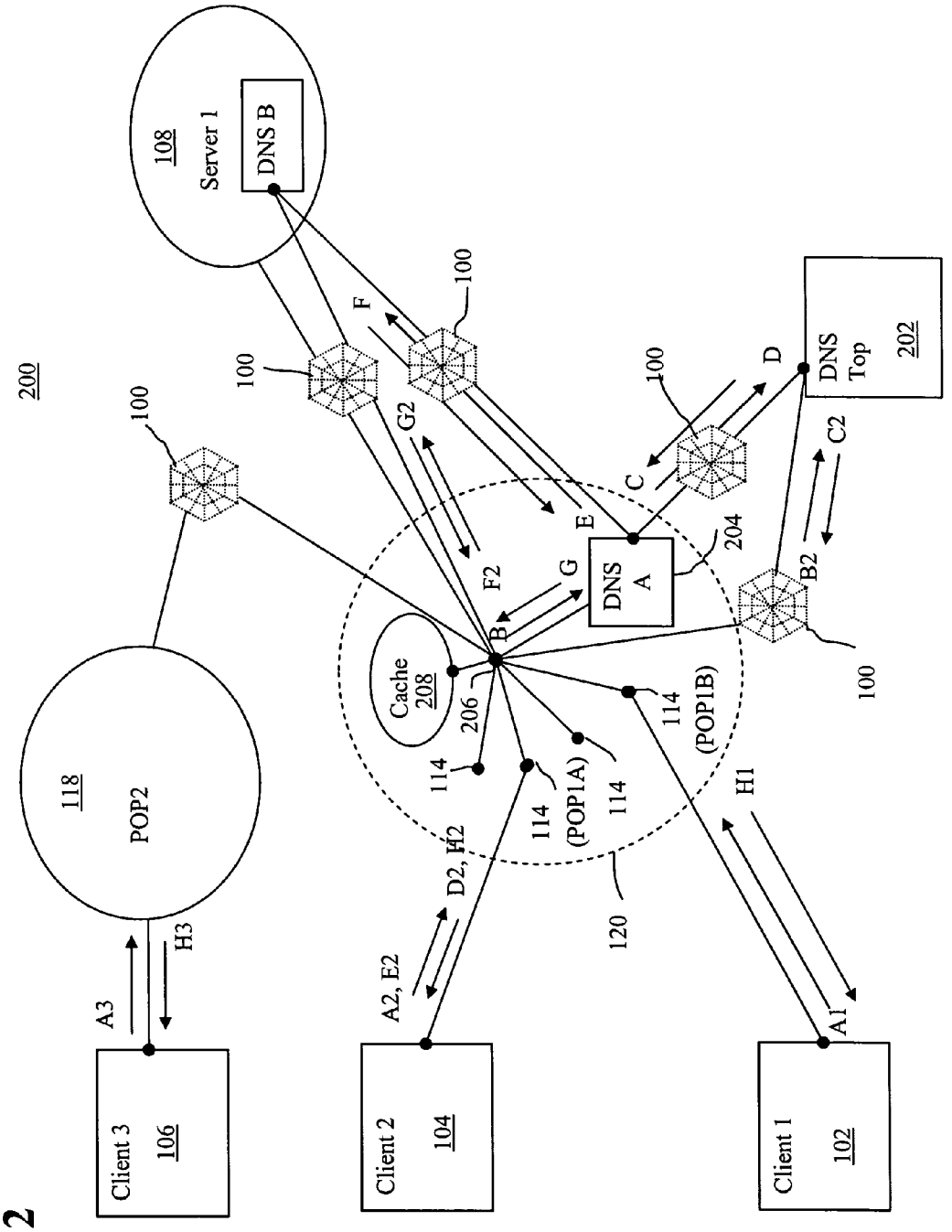
200
108
Server 1
DNS B
100
F
G2
E
C
D
DNS Top
202
C2
B2
204
DNS A
G
F2
B
Cache
208
206
114
(POP1A)
114
(POP1B)
120
118
POP2
A3
H3
D2, H2
A2, E2
H1
A1
Client 3
106
Client 2
104
Client 1
102

FIG. 2

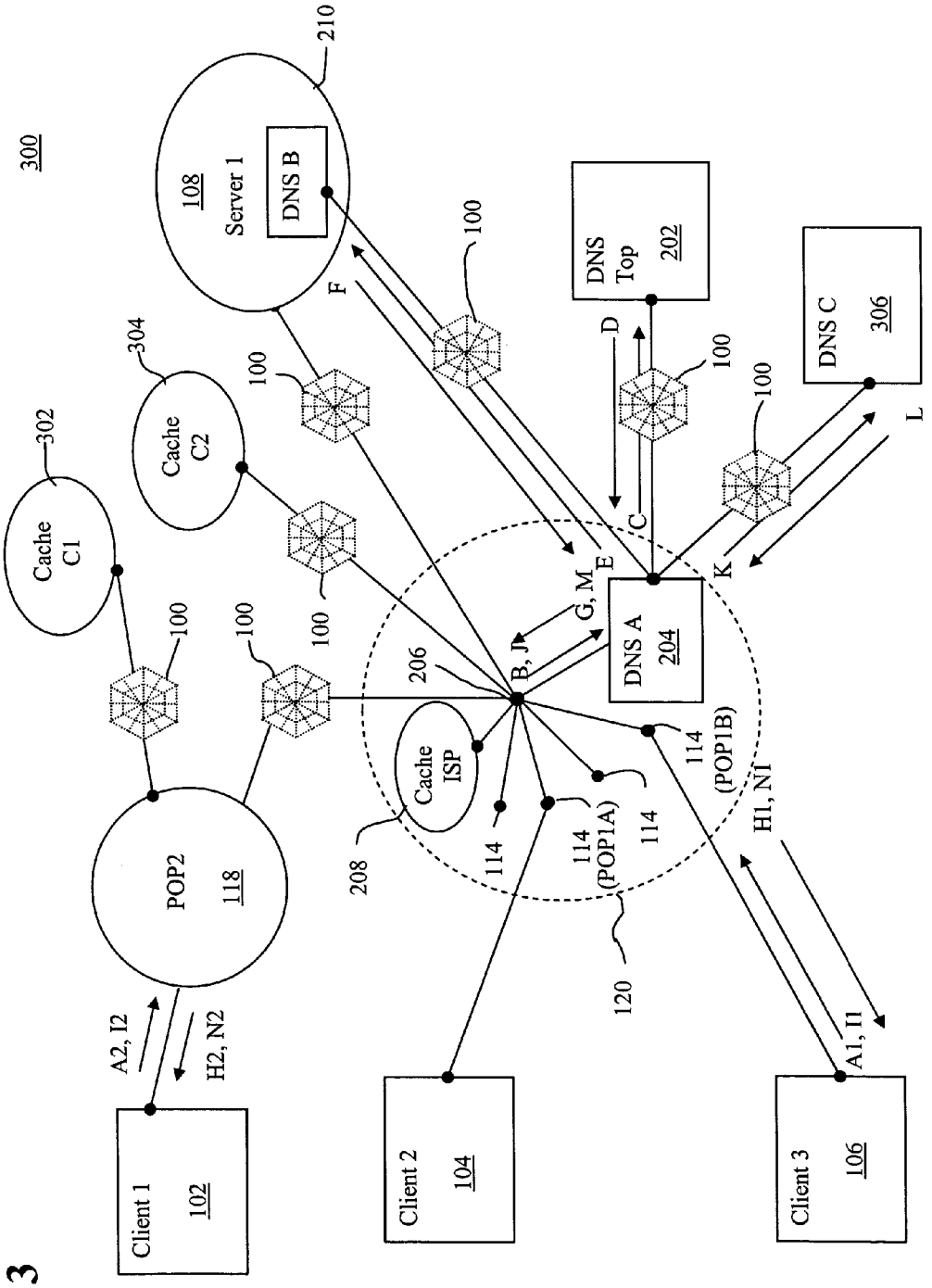
300
108
Server 1
DNS B
210
DNS Top
202
DNS C
306
Cache C2
304
Cache C1
302
100
F
D
C
E
G, M
B, J
K
L
DNS A
204
206
Cache ISP
208
114
114 (POP1A)
114 (POP1B)
120
H1, N1
A1, I1
POP2
118
A2, I2
H2, N2
Client 1
102
Client 2
104
Client 3
106

FIG. 3

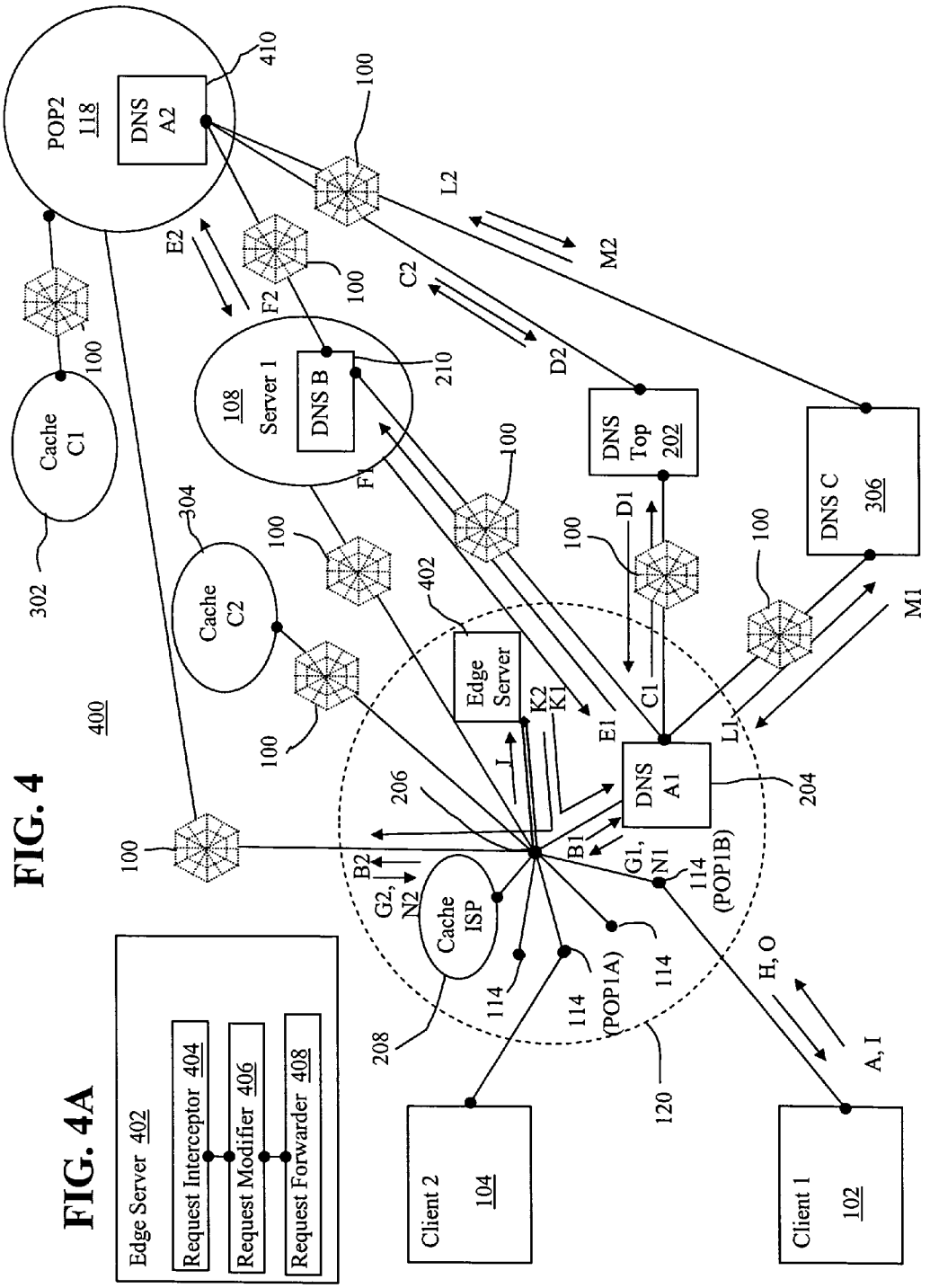
POP2
118
DNS
A2
410
100
L2
M2
E2
F2
C2
D2
Cache
C1
302
108
Server 1
DNS B
210
F1
DNS
Top
202
DNS C
306
304
Cache
C2
402
Edge
Server
K2
K1
E1
C1
D1
M1
L1
400
I
DNS
A1
204
206
B1
G1,
N1
114
(POP1B)
B2
G2,
N2
Cache
ISP
208
114
(POP1A)
H, O
A, I
120
Client 2
104
Client 1
102
Edge Server 402
Request Interceptor 404
Request Modifier 406
Request Forwarder 408

FIG. 4

FIG. 4A

FIG. 5

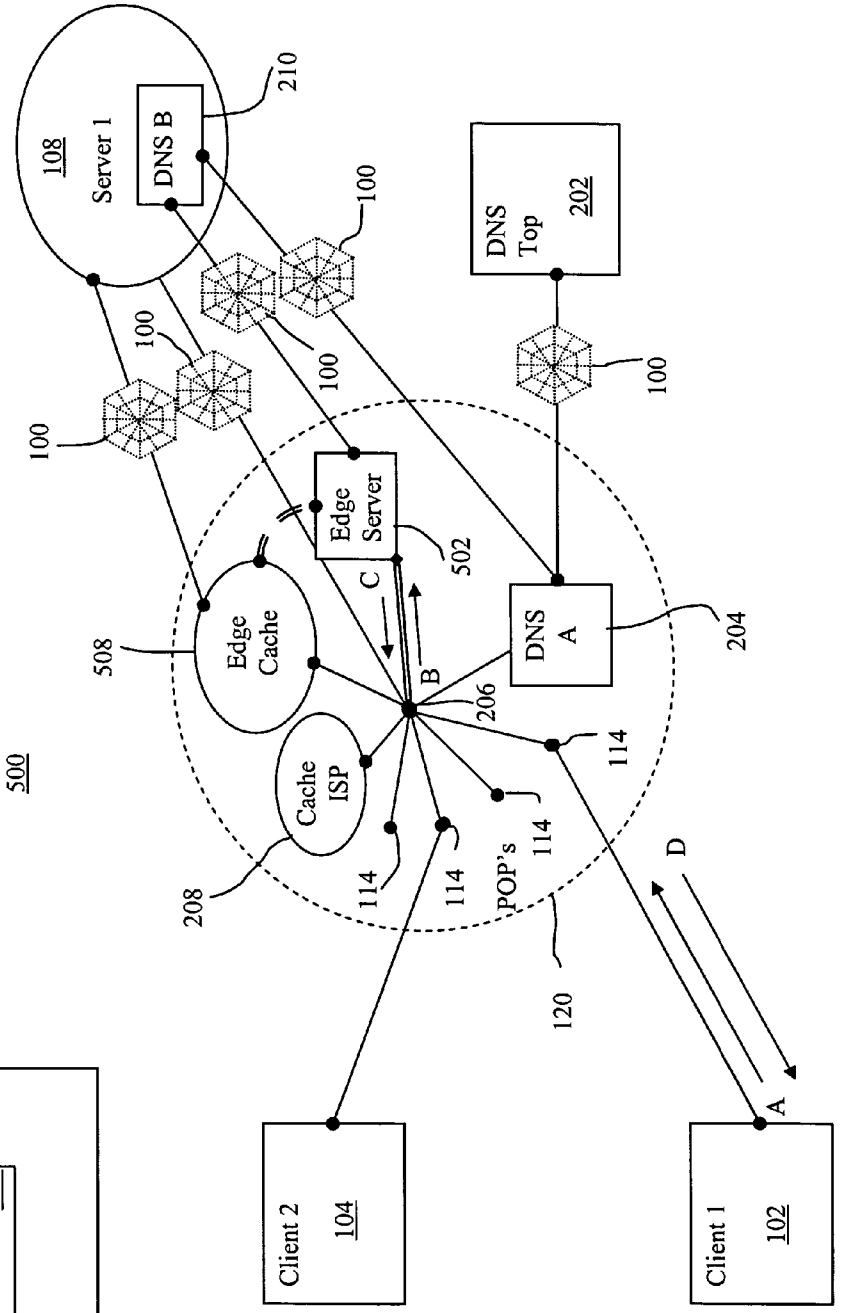
500
108
Server 1
DNS B
210
100
DNS
Top
202
Edge
Server
502
C
B
DNS
A
204
Edge
Cache
508
206
Cache
ISP
208
114
POP's
120
D
A
Client 2
104
Client 1
102

FIG. 5A

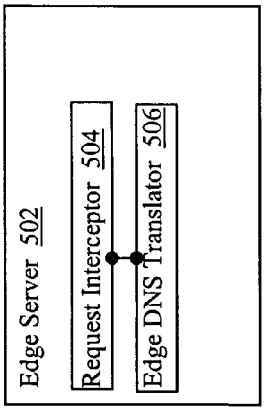
Edge Server 502
Request Interceptor 504
Edge DNS Translator 506

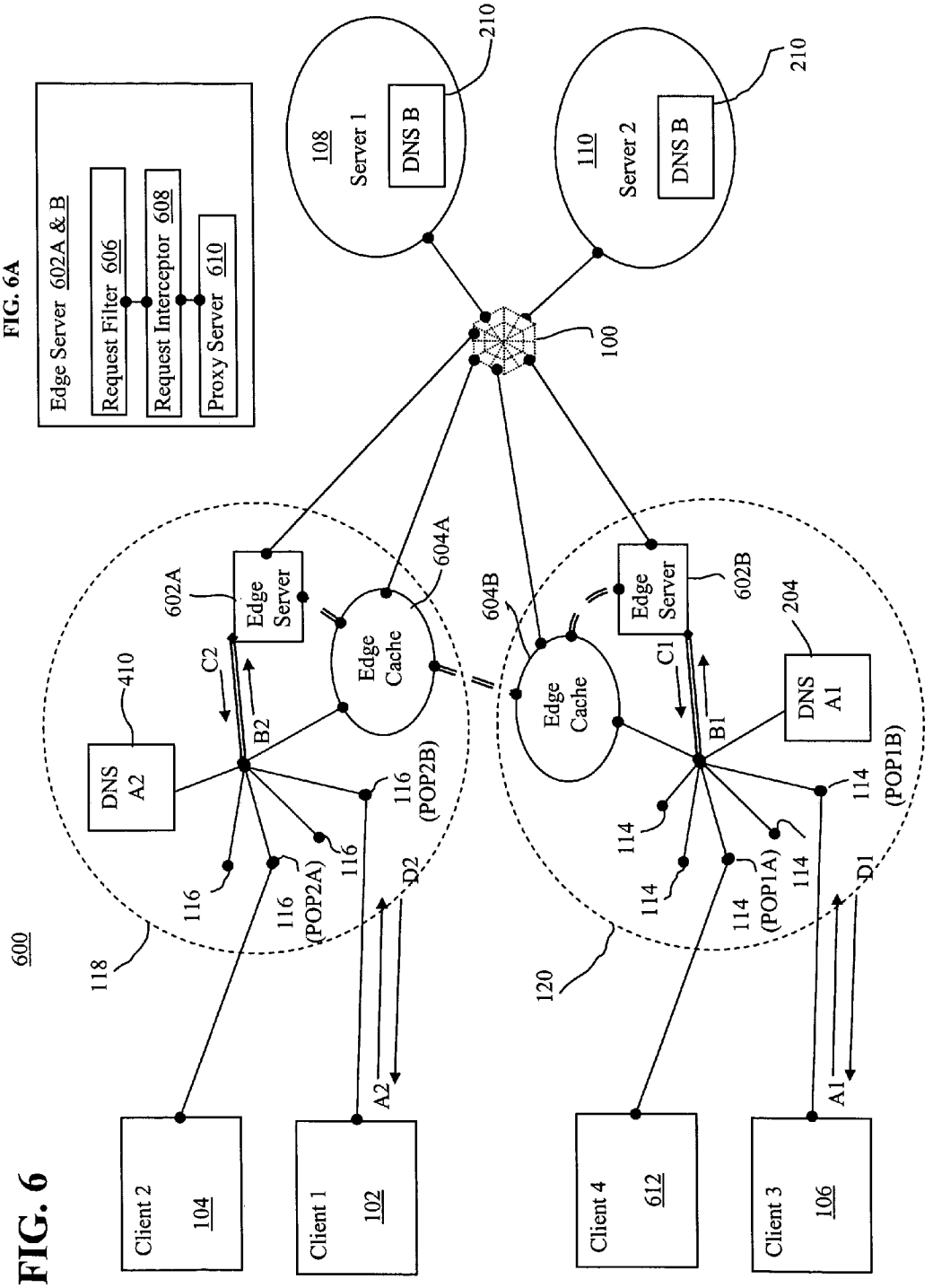
600
Edge Server 602A & B
Request Filter 606
Request Interceptor 608
Proxy Server 610
108
Server 1
DNS B
210
110
Server 2
DNS B
210
100
Edge Server
602A
Edge Cache
604A
604B
Edge Server
602B
Edge Cache
204
DNS A1
410
DNS A2
C2
B2
C1
B1
116
116 (POP2A)
116 (POP2B)
114
114 (POP1A)
114 (POP1B)
D2
D1
A2
A1
118
120
Client 2 104
Client 1 102
Client 4 612
Client 3 106

FIG. 6A

FIG. 6

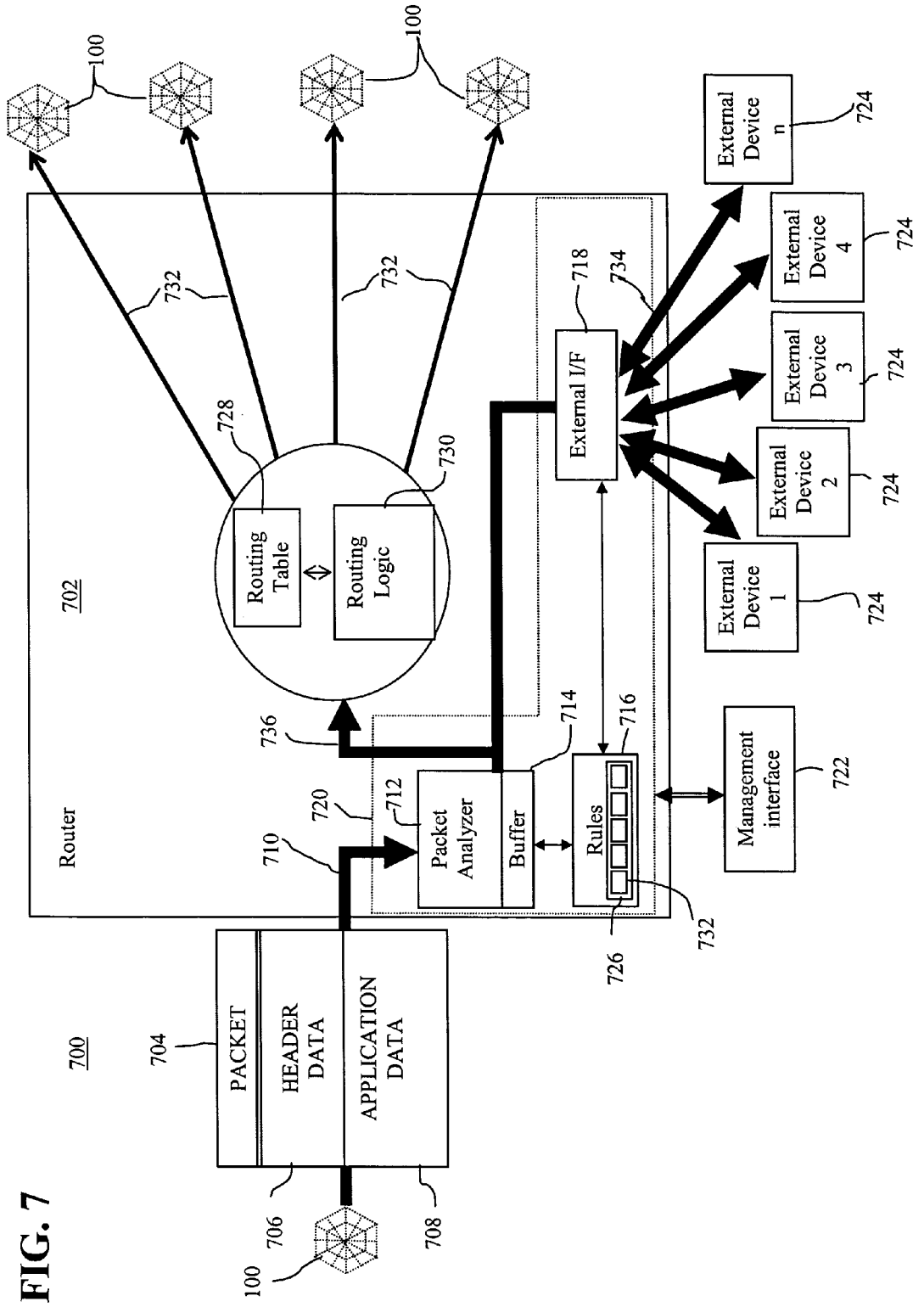
700
702
Router
PACKET
HEADER DATA
APPLICATION DATA
Packet Analyzer
Buffer
Rules
Routing Table
Routing Logic
External I/F
Management interface
External Device 1
External Device 2
External Device 3
External Device 4
External Device n
100
704
706
708
710
712
714
716
718
720
722
724
726
728
730
732
734
736

FIG. 7

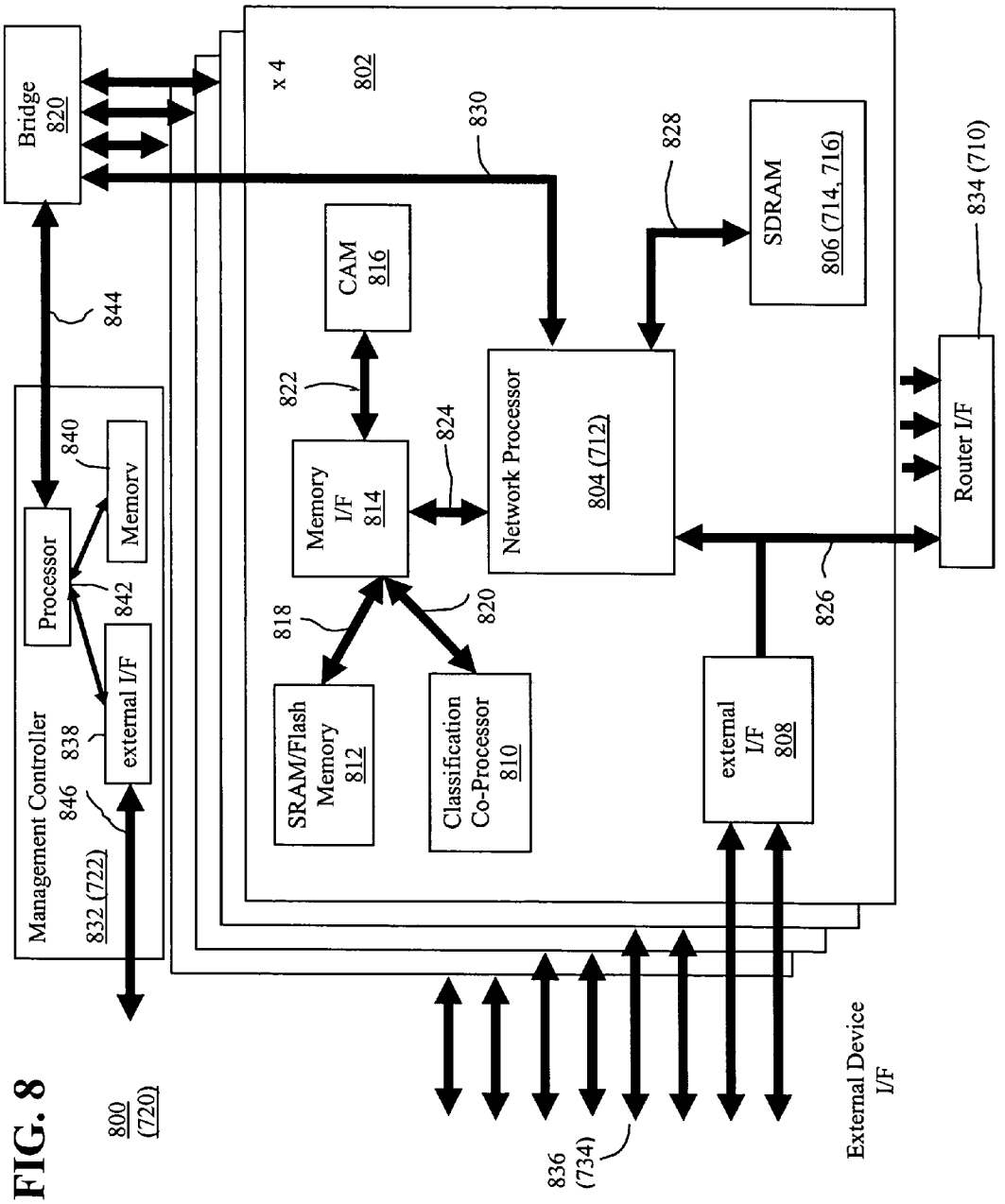
Bridge 820
x 4
802
830
828
SDRAM 806 (714, 716)
834 (710)
CAM 816
844
822
824
Memory I/F 814
Network Processor 804 (712)
Router I/F
840
Memory
Processor
842
818
820
826
SRAM/Flash Memory 812
Classification Co-Processor 810
external I/F 808
Management Controller
838
external I/F
846
832 (722)
800 (720)
836 (734)
External Device I/F

FIG. 8

FIG. 9

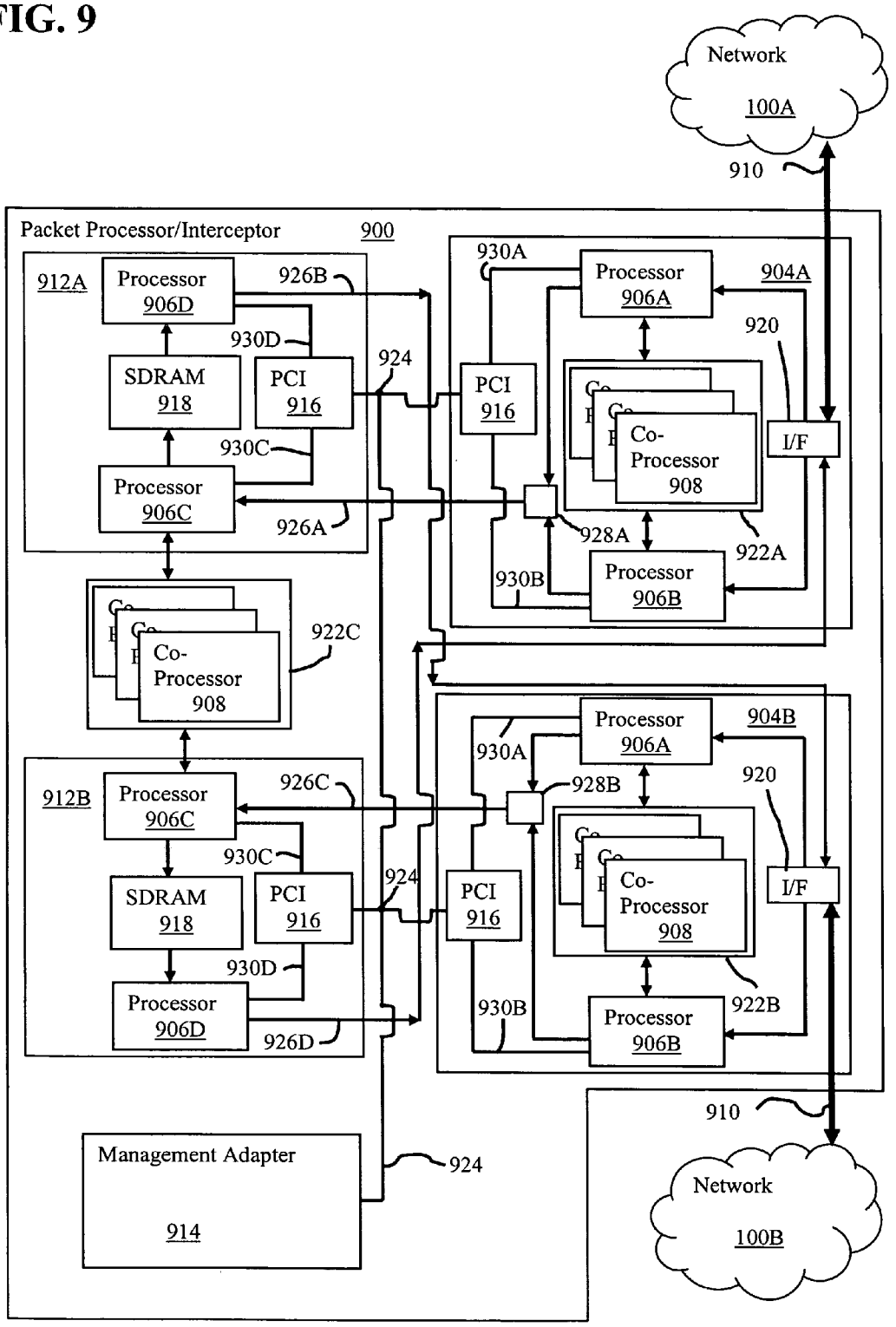
Network
100A
910
Packet Processor/Interceptor
900
912A
Processor
906D
926B
930D
SDRAM
918
PCI
916
924
930C
Processor
906C
926A
930A
Processor
906A
904A
920
PCI
916
Co-
Processor
908
I/F
928A
922A
930B
Processor
906B
Co-
Processor
908
922C
Processor
906A
904B
930A
928B
920
912B
Processor
906C
926C
930C
SDRAM
918
PCI
916
924
PCI
916
Co-
Processor
908
I/F
930D
Processor
906D
926D
930B
Processor
906B
922B
910
Management Adapter
914
924
Network
100B

SYSTEM AND METHOD FOR PROCESSING PACKETS ACCORDING TO USER SPECIFIED RULES GOVERNED BY A SYNTAX

RELATED APPLICATIONS

This application is a continuation under 37 C.F.R. § 1.53(b) of U.S. patent application Ser. No. 09/858,309, filed May 15, 2001 now U.S. Pat. No. 7,032,031, the entire disclosure of which is hereby incorporated by reference, which claims priority as a continuation-in-part under 37 C.F.R. § 1.53(b) of U.S. patent application Ser. No. 09/602,129, filed Jun. 23, 2000 now U.S. Pat. No. 6,829,654 , the entire disclosure of which is hereby incorporated by reference.

BACKGROUND

The Internet is growing by leaps and bounds. Everyday, more and more users log on to the Internet for the first time and these, and existing users are finding more and more content being made available to them. The Internet has become a universal medium for communications, commerce and information gathering.

Unfortunately, the growing user base along with the growing content provider base is causing ever increasing congestion and strain on the Internet infrastructure, the network hardware and software plus the communications links that link it all together. While the acronym "WWW" is defined as "World Wide Web", many users of the Internet have come to refer to it as the "World Wide Wait."

These problems are not limited to the Internet either. Many companies provide internal networks, known as intranets, which are essentially private Internets for use by their employees. These intranets can become overloaded as well. Especially, when a company's intranet also provides connectivity to the Internet. In this situation, the intranet is not only carrying internally generated traffic but also Internet traffic generated by the employees.

The growth of the Internet has also resulted in more and more malicious programmer activity. These "hackers" spread virus programs or attempt to hack into Web sites in order to steal valuable information such as credit card numbers. Further, there have been an increasing number of "Denial of Service" attacks where a hacker infiltrates multiple innocent computers connected to the Internet and coordinates them, without their owners' knowledge, to bombard a particular Web site with an immense volume of traffic. This flood of traffic overwhelms the target's servers and literally shuts the Web site down.

Accordingly, there is a need for an enhanced Internet infrastructure to more efficiently deliver content from providers to users and provide additional network throughput, reliability, security and fault tolerance.

BRIEF DESCRIPTION OF THE DRAWINGS

FIG. **1** depicts an exemplary network for use with the preferred embodiments.

FIG. **2** depicts the operations of the Domain Name System of the exemplary network of FIG. **1**.

FIG. **3** depicts an exemplary content delivery system for use with the exemplary network of FIG. **1**.

FIG. **4** depicts a content delivery system for use with the network of FIG. **1** according to a first embodiment.

FIG. **4**A depicts a block diagram of the content delivery system of FIG. **4**.

FIG. **5** depicts a content delivery system for use with the network of FIG. **1** according to a second embodiment.

FIG. **5**A depicts a block diagram of the content delivery system of FIG. **5**.

FIG. **6** depicts a content delivery system for use with the network of FIG. **1** according to a third embodiment.

FIG. **6**A depicts a block diagram of the content delivery system of FIG. **6**.

FIG. **7** depicts an edge adapter and packet interceptor according a fourth embodiment.

FIG. **8** depicts a block diagram of the packet analyzer/adapter of FIG. **7**.

FIG. **9** depicts a block diagram of a packet interceptor/analyzer according to a fifth embodiment.

DETAILED DESCRIPTION OF THE PRESENTLY PREFERRED EMBODIMENTS

FIG. **1** shows an exemplary network **100** for use with the presently preferred embodiments. It is preferred that the network **100** be a publicly accessible network, and in particular, the Internet. While, for the purposes of this disclosure, the disclosed embodiments will be described in relation to the Internet, one of ordinary skill in the art will appreciate that the disclosed embodiments are not limited to the Internet and are applicable to other types of public networks as well as private networks, and combinations thereof, and all such networks are contemplated.

I. Introduction

As an introduction, a network interconnects one or more computers so that they may communicate with one another, whether they are in the same room or building (such as a Local Area Network or LAN) or across the country from each other (such as a Wide Area Network or WAN). A network is a series of points or nodes **126** interconnected by communications paths **128**. Networks can interconnect with other networks and can contain sub-networks. A node **126** is a connection point, either a redistribution point or an end point, for data transmissions generated between the computers which are connected to the network. In general, a node **126** has a programmed or engineered capability to recognize and process or forward transmissions to other nodes **126**. The nodes **126** can be computer workstations, servers, bridges or other devices but typically, these nodes **126** are routers or switches.

A router is a device or, in some cases, software in a computer, that determines the next network node **126** to which a piece of data (also referred to as a "packet" in the Internet context) should be forwarded toward its destination. The router is connected to at least two networks or sub-networks and decides which way to send each information packet based on its current understanding of the state of the networks to which it is connected. A router is located at any juncture of two networks, sub-networks or gateways, including each Internet point-of-presence (described in more detail below). A router is often included as part of a network switch. A router typically creates or maintains a table of the available routes and their conditions and uses this information along with distance and cost algorithms to determine the best route for a given packet. Typically, a packet may travel through a number of network points, each containing additional routers, before arriving at its destination.

The communications paths **128** of a network **100**, such as the Internet, can be coaxial cable, fiber optic cable, telephone cable, leased telephone lines such as T1 lines, satellite links, microwave links or other communications technology as is

known in the art. The hardware and software which allows the network to function is known as the "infrastructure." A network **100** can also be characterized by the type of data it carries (voice, data, or both) or by the network protocol used to facilitate communications over the network's **100** physical infrastructure.

The Internet, in particular, is a publicly accessible worldwide network **100** which primarily uses the Transport Control Protocol and Internet Protocol ("TCP/IP") to permit the exchange of information. At a higher level, the Internet supports several applications protocols including the Hypertext Transfer Protocol ("HTTP") for facilitating the exchange of HTML/World Wide Web ("WWW") content, File Transfer Protocol ("FTP") for the exchange of data files, electronic mail exchange protocols, Telnet for remote computer access and Usenet ("NNTP" or Network News Transfer Protocol) for the collaborative sharing and distribution of information. It will be appreciated that the disclosed embodiments are applicable to many different applications protocols both now and later developed.

Logically, the Internet can be thought of as a web of intermediate network nodes **126** and communications paths **128** interconnecting those network nodes **126** which provide multiple data transmission routes from any given point to any other given point on the network **100** (i.e. between any two computers connected to the network **100**). Physically, the Internet can also be thought of as a collection of interconnected sub-networks wherein each sub-network contains a portion of the intermediate network nodes **126** and communications paths **128**. The division of the Internet into sub-networks is typically geographically based, but can also be based on other factors such as resource limitations and resource demands. For example, a particular city may be serviced by one or more Internet sub-networks provided and maintained by competing Internet Service Providers ("ISPs") (discussed in more detail below) to support the service and bandwidth demands of the residents.

Contrasting the Internet with an intranet, an intranet is a private network contained within an enterprise, such as a corporation, which uses the TCP/IP and other Internet protocols, such as the World Wide Web, to facilitate communications and enhance the business concern. An intranet may contain its own Domain Name Server ("DNS") and may be connected to the Internet via a gateway, i.e., an intra-network connection, or gateway in combination with a proxy server or firewall, as are known in the art.

Referring back to FIG. **1**, clients **102**, **104**, **106** and servers **108**, **110**, **112** are shown coupled with the network **100**. Herein, the phrase "coupled with" is defined to mean directly connected to or indirectly connected with, through one or more intermediate components. Such intermediate components may include both hardware and software based components. The network **100** facilitates communications and interaction between one or more of the clients **102**, **104**, **106** and one or more of the servers **108**, **110**, **112** (described in more detail below). Alternatively, the network **100** also facilitates communications and interaction among one or more of the clients **102**, **104**, **106**, e.g. between one client **102**, **104**, **106** and another client **102**, **104**, **106** or among one or more of the servers **108**, **110**, **112**, e.g. between one server **108**, **110**, **112** and another server **108**, **110**, **112**.

A client **102**, **104**, **106** may include a personal computer workstation, mobile or otherwise, wireless device such as a personal digital assistant or cellular telephone, an enterprise scale computing platform such as a mainframe computer or server or may include an entire intranet or other private network which is coupled with the network **100**. Typically, a client **102**, **104**, **106** initiates data interchanges with other computers, such as servers **108**, **110**, **112** coupled with the network **100**. These data interchanges most often involve the client requesting data or content from the other computer and the other computer providing that data or content in response to the request. Alternatively, the other computer coupled with the network can "push" data or content to the client **102**, **104**, **106** without it first being requested. For example, an electronic mail server **108**, **110**, **112** may automatically push newly received electronic mail over the network **100** to the client **102**, **104**, **106** as the new electronic mail arrives, alleviating the client **102**, **104**, **106** from first requesting that new mail be sent. It will be apparent to one of ordinary skill in the art that there can be many clients **102**, **104**, **106** coupled with the network **100**.

A server **108**, **110**, **112** may include a personal computer workstation, an enterprise scale computing platform or other computer system as are known in the art. A server **108**, **110**, **112** typically responds to requests from clients **102**, **104**, **106** over the network **100**. In response to the request, the server **108**, **110**, **112** provides the requested data or content to the client **102**, **104**, **106** which may or may not require some sort of processing by the server **108**, **110**, **112** or another computer to produce the requested response. It will be apparent to one of ordinary skill in the art that a client **102**, **104**, **106** may also be a server **108**, **110**, **112** and vice versa depending upon the nature of the data interchange taking place, e.g. peer-to-peer architectures. For purposes of this disclosure, during any given communication exchange, a client **102**, **104**, **106** requests or receives content and is separate from the server **108**, **110**, **112** which provides the content (whether requested or not, i.e. pushed). Preferably, servers **108**, **110**, **112** are World Wide Web servers serving Web pages and/or Web content to the clients **102**, **104**, **106** (described in more detail below). It will be apparent to one of ordinary skill in the art that there can be many servers **108**, **110**, **112** coupled with the network **100**.

Clients **102**, **104**, **106** are each coupled with the network **100** at a point of presence ("POP") **114**, **116**. The POP **114**, **116** is the connecting point which separates the client **102**, **104**, **106** from the network **100**. In a public network **100**, such as the Internet, the POP **114**, **116** is the logical (and possibly physical) point where the public network **100** ends, after which comes the private (leased or owned) hardware or private (leased or owned) network of the client **102**, **104**, **106**. A POP **114**, **116** is typically provided by a service provider **118**, **120**, such as an Internet Service Provider ("ISP") **118**, **120**, which provides connectivity to the network **100** on a fee for service basis. A POP **114**, **116** may actually reside in rented space owned by telecommunications carrier such as AT&T or Sprint to which the ISP **118**, **120** is connected. A POP **114**, **116** may be coupled with routers, digital/analog call aggregators, servers **108**, **110**, **112**, and frequently frame relay or ATM switches. As will be discussed below, a POP **114**, **116** may also contain cache servers and other content delivery devices.

A typical ISP **118**, **120** may provide multiple POP's **114**, **116** to simultaneously support many different clients **102**, **104**, **106** connecting with the network **100** at any given time. A POP **114**, **116** is typically implemented as a piece of hardware such as a modem or router but may also include software and/or other hardware such as computer hardware to couple the client **102**, **104**, **106** with the network **100** both physically/electrically and logically (as will be discussed below). The client **102**, **104**, **106** connects to the POP **114**,**116** over a telephone line or other transient or dedicated connection. For example, where a client **102**, **104**, **106** is a personal computer

workstation with a modem, the ISP **118**, **120** provides a modem as the POP **114**, **116** to which the client **102**, **104**, **106** can dial in and connect to via a standard telephone line. Where the client **102**, **104**, **106** is a private intranet, the POP **114**, **116** may include a gateway router which is connected to an internal gateway router within the client **102**, **104**, **106** by a high speed dedicated communication link such as T1 line or a fiber optic cable.

A service provider **118**, **120** will generally provide POP's **114**, **116** which are geographically proximate to the clients **102**, **104**, **106** being serviced. For dial up clients **102**, **104**, **106**, this means that the telephone calls can be local calls. For any client **102**, **104**, **106**, a POP which is geographically proximate typically results in a faster and more reliable connection with the network **100**. Servers **108**, **110**, **112** are also connected to the network **100** by POP's **114**, **116**. These POP's **114**, **116** typically provide a dedicated, higher capacity and more reliable connection to facilitate the data transfer and availability needs of the server **108**, **110**, **112**. Where a client **102**, **104**, **106** is a wireless device, the service provider **118**, **120** may provide many geographically dispersed POP's **114**, **116** to facilitate connecting with the network **100** from wherever the client **102**, **104**, **106** may roam or alternatively have agreements with other service providers **118**, **120** to allow access by each other's customers. Each service provider **118**, **120**, along with its POP's **114**, **116** and the clients **102**, **104**, **106** effectively forms a sub-network of the network **100**.

Note that there may be other service providers **118**, **120** "upstream" which provide network **100** connectivity to the service providers **118**, **120** which provide the POP's **114**, **116**. Each upstream service provider **118**, **120** along with its downstream service providers **118**, **120** again forms a sub-network of the network **100**. Peering is the term used to describe the arrangement of traffic exchange between Internet service providers (ISPs) **118**, **120**. Generally, peering is the agreement to interconnect and exchange routing information. More specifically, larger ISP's **118**, **120** with their own backbone networks (high speed, high capacity network connections which interconnect sub-networks located in disparate geographic regions) agree to allow traffic from other large ISP's **118**, **120** in exchange for traffic on their backbones. They also exchange traffic with smaller service providers **118**, **120** so that they can reach regional end points where the POP's **114**, **116** are located. Essentially, this is how a number of individual sub-network owners compose the Internet. To do this, network owners and service providers **118**, **120**, work out agreements to carry each other's network traffic. Peering requires the exchange and updating of router information between the peered ISP's **118**, **120**, typically using the Border Gateway Protocol (BGP). Peering parties interconnect at network focal points such as the network access points (NAPs) in the United States and at regional switching points. Private peering is peering between parties that are bypassing part of the publicly accessible backbone network through which most Internet traffic passes. In a regional area, some service providers **118**, **120** have local peering arrangements instead of, or in addition to, peering with a backbone service provider **118**, **120**.

A network access point (NAP) is one of several major Internet interconnection points that serve to tie all of the service providers **118**, **120** together so that, for example, an AT&T user in Portland, Oreg. can reach the Web site of a Bell South customer in Miami, Fla. The NAPs provide major switching facilities that serve the public in general. Service providers **118**, **120** apply to use the NAP facilities and make their own inter-company peering arrangements. Much Internet traffic is handled without involving NAPs, using peering arrangements and interconnections within geographic regions.

For purposes of later discussions, the network **100** can be further logically described to comprise a core **122** and an edge **124**. The core **122** of the network **100** includes the servers **108**, **110**, **112** and the bulk of the network **100** infrastructure, as described above, including larger upstream service providers **118**, **120**, and backbone communications links, etc. Effectively, the core **122** includes everything within the network **100** up to the POP's **114**, **116**. The POP's **114**, **116** and their associated hardware lie at the edge **124** of the network **100**. The edge **124** of the network **100** is the point where clients **102**, **104**, **106**, whether single devices, computer workstations or entire corporate internal networks, couple with the network **100**. As defined herein, the edge **124** of the network **100** may include additional hardware and software such as Domain Name Servers, cache servers, proxy servers and reverse proxy servers as will be described in more detail below. Typically, as the network **100** spreads out from the core **122** to the edge **124**, the total available bandwidth of the network **100** is diluted over more and more lower cost and lower bandwidth communications paths. At the core **122**, bandwidth over the higher capacity backbone interconnections tends to be more costly than bandwidth at the edge **124** of the network **100**. As with all economies of scale, high bandwidth interconnections are more difficult to implement and therefore rarer and more expensive than low bandwidth connections. It will be appreciated, that even as technology progresses, newer and higher bandwidth technologies will remain more costly than lower bandwidth technologies.

II. The World Wide Web

As was discussed above, clients **102**, **104**, **106** engage in data interchanges with servers **108**, **110**, **112**. On the Internet, these data exchanges typically involve the World Wide Web ("WWW"). Relative to the TCP/IP suite of protocols (which are the basis for information exchange on the Internet), HTTP is an application protocol. A technical definition of the World Wide Web is all the resources and users on the Internet that are using the Hypertext Transfer Protocol ("HTTP"). HTTP is the set of rules for exchanging data in the form of files (text, graphic images, audio, video, and other multimedia files, such as streaming media and instant messaging), also known as Web content, between clients **102**, **104**, **106** and servers **108**, **110**, **112**. Servers **108**, **110**, **112** which serve Web content are also known as Web servers **108**, **110**, **112**.

Essential concepts that are part of HTTP include (as its name implies) the idea that files/content can contain references to other files/content whose selection will elicit additional transfer requests. Any Web server **108**, **110**, **112** contains, in addition to the files it can serve, an HTTP daemon, a program that is designed to wait for HTTP requests and handle them when they arrive. A personal computer Web browser program, such as Microsoft™ Internet Explorer, is an HTTP client program (a program which runs on the client **102**, **104**, **106**), sending requests to Web servers **108**, **110**, **112**. When the browser user enters file requests by either "opening" a Web file (typing in a Uniform Resource Locator or URL) or clicking on a hypertext link, the browser builds an HTTP request and sends it to the Web server **108**, **110**, **112** indicated by the URL. The HTTP daemon in the destination server **108**, **110**, **112** receives the request and, after any necessary processing, returns the requested file to the client **102**, **104**, **106**.

The Web content which a Web server typically serves is in the form of Web pages which consist primarily of Hypertext Markup Language. Hypertext Markup Language ("HTML") is the set of "markup" symbols or codes inserted in a file usually containing text intended for display on a World Wide Web browser. The markup tells the Web browser how to display a Web page's content for the user. The individual markup codes are referred to as elements or tags. Web pages can further include references to other files which are stored separately from the HTML code, such as image or other multimedia files to be presented in conjunction with the text Web content.

A Web site is a related collection of Web files/pages that includes a beginning HTML file called a home page. A company or an individual tells someone how to get to their Web site by giving that person the address or domain name of their home page (the addressing scheme of the Internet and the TCP/IP protocol is described in more detail below). From the home page, links are typically provided, either directly or through intermediate pages, to all the other pages (HTML files) located on their site. For example, the Web site for IBM™ has the home page address of http://www.ibm.com. Alternatively, the home page address may include a specific file name like index.html but, as in IBM's case, when a standard default name is set up, users don't have to enter the file name. IBM's home page address leads to thousands of pages, but a Web site may also consist of just a few pages.

Since site implies a geographic place, a Web site can be confused with a Web server **108**, **110**, **112**. As was discussed above, a server **108**, **110**, **112** is a computer that holds and serves the HTML files, images and other data for one or more Web sites. A very large Web site may be spread over a number of servers **108**, **110**, **112** in different geographic locations or one server **108**, **110**, **112** may support many Web sites. For example, a Web hosting company may provide server **108**, **110**, **112** facilities to a number of Web sites for a fee. Web sites can also contain links to pages or files on other Web sites.

III. The Domain Name System

As was described above, the network **100** facilitates communications between clients **102**, **104**, **106** and servers **108**, **110**, **112**. More specifically, the network **100** facilitates the transmission of HTTP requests from a client **102**, **104**, **106** to a server **108**, **110**, **112** and the transmission of the server's **108**, **110**, **112**, response to that request, the requested content, back to the client **102**, **104**, **106**. In order to accomplish this, each device coupled with the network **100**, whether it be a client **102**, **104**, **106** or a server **108**, **110**, **112** must provide a unique identifier so that communications can be routed to the correct destination. On the Internet, these unique identifiers comprise domain names (which generally will include World Wide Web Uniform Resource Locators or "URL's") and Internet Protocol addresses or "IP" addresses. Every client **102**, **104**, **106** and every server **108**, **110**, **112** must have a unique IP address so that the network **100** can reliably route communications to it. Additionally, clients **102**, **104**, **106** and servers **108**, **110**, **112** can be coupled with proxy servers (forward, reverse or transparent), discussed in more detail below, which allow multiple clients **102**, **104**, **106** or multiple servers **108**, **110**, **112** to be associated with a single domain name or a single IP address. In addition, a particular server **108**, **110**, **112** may be associated with multiple domain names and/or IP addresses for more efficient handling of requests or to handle multiple content providers, e.g. multiple Web sites, on the same server **108**, **110**, **112**. Further, as was discussed above, since a POP **114**, **116** provides the connecting point for any particular client **102**, **104**, **106** to connect to the network **100**, it is often satisfactory to provide each POP **114**, **116** with a single unique domain name and IP address since the POP **114**, **116** will reliably deliver any communications received by it to its connected client **102**, **104**, **106**. Where the client **102**, **104**, **106** is a private network, it may have its own internal hardware, software and addressing scheme (which may also include domain names and IP addresses) to reliably deliver data received from the POP **114**, **116** to the ultimate destination within the private network client **102**, **104**, **106**.

As was discussed, the Internet is a collection of interconnected sub-networks whose users communicate with each other. Each communication carries the address of the source and destination sub-networks and the particular machine within the sub-network associated with the user or host computer at each end. This address is called the IP address (Internet Protocol address). In the current implementation of the Internet, the IP address is a 32 bit binary number divided into four 8 bit octets. This 32-bit IP address has two parts: one part identifies the source or destination sub-network (with the network number) and the other part identifies the specific machine or host within the source or destination sub-network (with the host number). An organization can use some of the bits in the machine or host part of the address to identify a specific sub-network within the sub-network. Effectively, the IP address then contains three parts: the sub-network number, an additional sub-network number, and the machine number.

One problem with IP addresses is that they have very little meaning to ordinary users/human beings. In order to provide an easier to use, more user friendly network **100**, a symbolic addressing scheme operates in parallel with the IP addressing scheme. Under this symbolic addressing scheme, each client **102**, **104**, **106** and server **108**, **110**, **112** is also given a "domain name" and further, individual resources, content or data are given a Uniform Resource Locator ("URL") based on the domain name of the server **108**, **110**, **112** on which it is stored. Domain names and URL's are human comprehensible text and/or numeric strings which have symbolic meaning to the user. For example, a company may have a domain name for its servers **108**, **110**, **112** which is the company name, i.e., IBM Corporation's domain name is ibm.com. The portion of the domain name immediately following the period or "dot" is used to identify the type of organization to which the domain name belongs. These are called "top-level" domain names and include com, edu, org, mil, gov, etc. Com indicates a corporate entity, edu indicates an educational institution, mil indicates a military entity, and gov indicates a government entity. It will be apparent to one of ordinary skill in the art that the text strings which make up domain names may be arbitrary and that they are designed to have relevant symbolic meaning to the users of the network **100**. A URL typically includes the domain name of the provider of the identified resource, an indicator of the type of resource and an identifier of the resource itself. For example, for the URL "http://www.ibm.com/index.html", http identifies this resource as a hypertext transfer protocol compatible resource, www.ibm.com is the domain name (again, the www is arbitrary and typically is added to indicate to a user that the server **108**, **110**, **112**, associated with this domain name is a world wide Web server), and index.html identifies a hypertext markup language file named "index.html" which is stored on the identified server **108**, **110**, **112**.

Domain names make the network **100** easier for human beings to utilize it, however the network infrastructure ultimately uses IP addresses, and not domain names, to route data to the correct destination. Therefore, a translation system is provided by the network **100** to translate the symbolic human

comprehensible domain names into IP addresses which can then be used to route the communications. The Domain Name System ("DNS") is the way that Internet domain names are located and translated into IP addresses. The DNS is a distributed translation system of address translators whose primary function is to translate domain names into IP addresses and vice versa. Due to the ever expanding number of potential clients **102**, **104**, **106** and servers **108**, **110**, **112** coupled with the network **100** (currently numbering in the millions), maintaining a single central list of domain name/IP address correspondences would be impractical. Therefore, the lists of domain names and corresponding IP addresses are distributed throughout the Internet in a hierarchy of authority. A DNS server, typically located within close geographic proximity to a service provider **118**, **120** (and likely provided by that service provider **118**, **120**), handles requests to translate the domain names serviced by that service provider **118**, **120** or forwards those requests to other DNS servers coupled with the Internet for translation.

DNS translations (also known as "lookups" or "resolutions") can be forward or reverse. Forward DNS translation uses an Internet domain name to find an IP address. Reverse DNS translation uses an Internet IP address to find a domain name. When a user enters the address or URL for a Web site or other resource into their browser program, the address is transmitted to a nearby router which does a forward DNS translation in a routing table to locate the IP address. Forward DNS translations are the more common translation since most users think in terms of domain names rather than IP addresses. However, occasionally a user may see a Web page with a URL in which the domain name part is expressed as an IP address (sometimes called a dot address) and wants to be able to see its domain name, to for example, attempt to figure the identity of who is providing the particular resource. To accomplish this, the user would perform a reverse DNS translation.

The DNS translation servers provided on the Internet form a hierarchy through which any domain name can be "resolved" into an IP address. If a particular DNS translation server does not "know" the corresponding IP address of a given domain name, it "knows" other DNS translation servers it can "ask" to get that translation. This hierarchy includes "top-level" DNS translation servers which "know" which resources (clients **102**, **104**, **106** or servers **108**, **110**, **112**) have a particular top level domain identifier, i.e. corn, gov, edu, etc. as described above. This hierarchy further continues all the way up to the actual resource (client **102**, **104**, **106** or server **108**, **110**, **112**) which is typically affiliated with a DNS translation server which "knows" about it and its IP address. A particular DNS translation server "knows" of a translation when it exists in its table of translations and has not expired. Any particular translation will typically be associated with a Time to Live ("TTL") which specifies a duration, time or date after which the translation expires. As discussed, for a given translation, if a DNS translation server does not know the translation, because it is not in its routing table or it has expired, that DNS translation server will have to inquire up the hierarchical chain of DNS translation servers in order to make the translation. In this way, new domain name and IP address translations can be propagated through the DNS translation server hierarchy as new resources are added and old resources are assigned new addresses.

Referring now to FIG. **2**, there is shown a diagram illustrating the basic operation of the Domain Name System **200**. Depicted in the figure are clients **102**, **104**, **106**, labeled "Client **1**", "Client **2**" and "Client **3**." Clients **1** and **2** are coupled with POP's **114** provided by service provider **120**, labeled "POP**1**A" and "POP**1** B." Client **3** is coupled with a POP (not shown) provided by service provider **118**, labeled "POP**2**." In addition, service providers **118**, **120** may provide additional POP's **114** for other clients **102**, **104**, **106** as described above. Service provider **120** is shown further coupled with service provider **118**, a server **108**, labeled "Server **1**", preferably a Web server and more preferably an entire Web site which may comprise multiple sub-servers (not shown) as discussed above, and a top-level DNS translation server **202**, labeled "DNS Top", all via the network **100** which is preferably the Internet. Furthermore, service provider **120** further includes a DNS translation server **204**, labeled "DNS A" and routing and interconnection hardware **206**, as described above, to electrically and logically couple the POP's **114** with the network **100**. Optionally, the service provider **120** may also include a cache server **208** or proxy server (not shown) to enhance content delivery as described below.

In order for a client **102**, **104**, **106** to generate a request for content to a particular server **108**, the client **102**, **104**, **106** first determines the IP address of the server **108** so that it can properly address its request. Referring to Client **1** **102**, an exemplary DNS translation transaction where the client **102**, **104**, **106** is a single workstation computer is depicted. A user of Client **1** enters a URL or domain name of the Server **1** **108** and specific resource contained within Server **1**, such as a sub-server, into their browser program in order to make a request for content. The browser program typically handles negotiating the DNS translation transaction and typically has been pre-programmed ("bound") with the IP address of a particular DNS translation server to go to first in order to translate a given domain name. Typically, this bound DNS translation server will be DNS A **204** provided by the service provider **120**. Alternatively, where the client **102**, **104**, **106** is not bound to a particular DNS translation server, the service provider **120** can automatically route translation requests received by its POP's **114** to its DNS translation server, DNS A **202**. The process by which a domain name is translated is often referred to as the "slow start" DNS translation protocol. This is in contrast to what is known as the "slow start HTTP" protocol which will be discussed below in more detail in relation to content delivery.

Client **1** **102** then sends its translation request, labeled as "A**1**", to its POP **114**, POP **1**A. The request, A**1**, is addressed with a return address of Client **1** and with the IP address of the bound DNS A **204** therefore the service provider's **120** routing equipment **206** automatically routes the request to DNS A **204**, labeled as "B." Assuming DNS A **204** does not know how to translate the given domain name in the request or the translation in its routing table has expired, it must go up the DNS hierarchy to complete the translation. DNS A **204** will then forward a request, labeled "C", upstream to the top-level DNS translation server **202** associated with the top-level domain in the domain address, i.e. com, gov, edu etc. DNS A **204** has been pre-programmed with the IP addresses of the various hierarchical servers that it may need to talk to in order to complete a translation. DNS A **204** addresses request C with the IP address of the top-level DNS server **202** and also includes its own return address. DNA then transmits the request over the network **100** which routes the request to the top level DNS server **202**. The top-level DNS server **202** will then translate and return the IP address corresponding to Server **1** **108** back to DNS A **204** via the network **100**, labeled "D."

As was discussed above, a particular domain name may be associated with multiple IP addresses of multiple sub-servers **108**, **110**, **112**, as in the case of a Web site which, due to its size, must be stored across multiple sub-servers **108**, **110**,

112. Therefore, in order to identify the exact sub-server which can satisfy the request of the Client 1 102, DNS A 204 must further translate the domain address into the specific sub-server 108. In order to accomplish this, Server 1 108 provides its own DNS translation server 210 which knows about the various sub-servers and other resources contained within Server 1 108. DNS A 204, now knowing the IP address of Server 1 108, e.g. the Web site generally, can create a request, labeled "E", to translate the domain name/URL provided by Client 1 102 into the exact sub-server/resource on Server 1 108. DNS B 210 returns the translation, labeled "F", to DNS A 204 which then returns it to Client 1 102 via the service provider's routing equipment 206, labeled "G", which routes the response through POP1A 114 to the Client 1, labeled "H1." Client 1 102 now has the IP address it needs to formulate its content requests to Server 1 108.

FIG. 2, further depicts an exemplary DNS translation transaction wherein the client 102, 104, 106 is a private network such as an intranet. For example, client 2 104 may comprise its own network of computer systems. Further more, client 2 104 may provide its own DNS translation server (not shown) to handle internal routing of data as well as the routing of data over the network 100 generally for the computer systems coupled with this private network. In this case, the internal DNS translation server will either be programmed to send its unknown translations to DNS A (labeled as "A2", "B", "C", "D", "E", "F", "G", "H2") or may be programmed to use the DNS hierarchy itself, i.e. communicate directly with the upstream DNS Top 202 and DNS B 210 (labeled as "A2", "B2", "C2", "D2", "E2", "F2", "G2", "H2"). In these cases, the internal DNS translation server simply adds another layer to the DNS hierarchy as a whole, but the system continues to function similarly as described above.

In addition, FIG. 2, further depicts an exemplary DNS translation transaction wherein the client 102, 104, 106 is coupled with a POP 114 that is not associated with its bound DNS translation server 204. For example, Client 3 106 is depicted as being coupled with POP2 provided by service provider 118. In the exemplary situation, Client 3 106 is bound with DNS A 204 provided by service provider 120. This situation can occur in the wireless environment, where a particular wireless client 102, 104, 106 couples with whatever POP 114, 116 is available in its geographic proximity (e.g. when roaming) and is affiliated, e.g. has access sharing agreements, with the service provider 120 who generally provides connectivity services for the client 102, 104, 106. In this case, client 3 106 will perform its translation requests as described above, and will address these requests to its bound DNS Server, in this case DNS A 204. The service provider 118 will see the address of the DNS A 204 in client 3's 106 translation requests and appropriately route the translation request over the network 100 to service provider 120 and ultimately on to DNS A 204. DNS A 204 will appropriately handle the request and return it via the network 100 accordingly (labeled as "A3", "B", "C", "D", "E", "F", "G", "H3").

It will be appreciated that in each of the examples given above, if a particular DNS translation server already "knows" the requested translation, the DNS translation server does not have to go up the hierarchy and can immediately return the translation to the requester, either the client 102, 104, 106 or downstream DNS translation server.

It should be noted, that because a given server 108, 110, 112 may comprise multiple IP addresses, the DNS translation servers may be programmed to return a list of IP addresses in response to a given domain name translation request. Typically, this list will be ordered from the most optimal IP address to the least optimal IP address. The browser program can then pick one of the IP addresses to send content requests to and automatically switch to another IP address should the first requests fail to reach the destination server 108, 110, 112 due to a hardware failure or network 100 congestion. It will further be appreciated that the operations and structure of the existing DNS system are known to those of ordinary skill in the art.

IV. Content Delivery

As mentioned above, once the DNS translation is complete, the client 102, 104, 106 can initiate its requests for content from the server 108. Typically, the requests for content will be in the form of HTTP requests for Web content as described above. In order to alleviate server 108 overload, the HTTP protocol provides a "slow start" mechanism. As was described above, a Web page consists of HTML code plus images, multimedia or other separately stored content. Typically, the amount of HTML code contained within a Web page is very small compared to the amount of image and/or multimedia data. When a client requests a Web page from the server 108, the server 108 must serve the HTML code and the associated image/multimedia data to the client 102, 104, 106. However, the client 102, 104, 106, upon receipt of the HTML code, may be unwilling or unable, for whatever reason, to receive the associated image/multimedia data. To prevent the server 108 from wasting processing and bandwidth resources unnecessarily by sending unwanted data, the HTTP slow start protocol forces the client 102, 104, 106 to first request the HTML code and then subsequent to receipt of that HTML code, request any associated separately stored content. In this way, if after the initial request, the client 102, 104, 106 disconnects or otherwise switches to making requests of another server 108, the initial server 108 is not burdened with serving the unwanted or unnecessary content.

In addition, it important to note that clients 102, 104, 106 may be located very far from each other, either geographically or even logically in consideration of the network topology. For example, a client 102, 104, 106 may be located in Chicago, Ill. while the server 108 from which it is requesting content is located in Paris, France. Alternatively, client 102, 104, 106 may be located in the same city as server 108 but, due to the topology of the network 100, there may be multiple nodes 126 and interconnecting communications paths 128 between the client 102, 104, 106 and the server 108 necessitating a lengthy route for any data transmitted between the two. Either scenario can significantly impact the response time of a server 108 to a given request from a client 102, 104, 106. Adding in the fact that the network 100 may be servicing millions of clients 102, 104, 106 and servers 108 at any given time, the response time may be further impacted by reduced bandwidth and capacity caused by network congestion at the server 108 or at one or more intermediate network nodes 126.

Servers 108 and service providers 118, 120 may attempt to alleviate this problem by increasing the speed and bandwidth capacity of the network 100 interconnections. Further, servers 108 may attempt to alleviate slow request response times by providing multiple sub-servers which can handle the volume of requests received with minimal latency. These sub-servers can be provided behind a reverse proxy server which, as described above, is "tightly coupled" with the Web site and can route content requests directed to a single IP address, to any of the multiple sub-servers. This reduces the number of individual translations that have to be made available to the DNS translation system and kept up to date for all of the sub-servers. The reverse proxy server can also attempt to balance the load across multiple sub-servers by allocating

incoming requests using, for example, a round-robin routine. Reverse proxy servers can further include a cache server as described below to further enhance the Server's **108** ability to handle a high volume of requests or the serving of large volumes of data in response to any given request. It will be appreciated that reverse proxy servers and load balancing techniques are generally known to those of ordinary skill in the art.

Clients **102**, **104**, **106** and service providers **118**, **120** (and, as described above, servers **108**) may attempt to alleviate this problem by including a cache or cache server **208**. A cache server **208** is a server computer (or alternatively implemented in software directly on the client **102**, **104**, **106** or another computer coupled with the client **102**, **104**, **106** such as at the POP **114**) located, both logically and geographically, relatively close to the client **102**, **104**, **106**. The cache server **208** saves/caches Web pages and other content that clients **102**, **104**, **106**, who share the cache server, have requested in the past. Successive requests for the same content can then be satisfied by the cache server **208** itself without the need to contact the source of the content. A cache server **208** reduces the latency of fulfilling requests and also reduces the load on the content source. Further, a cache server **208** at the edge **124** of the Internet reduces the consumption of bandwidth at the core **122** of the Internet where it is more expensive. The cache server **208** may be a part of a proxy server or may be provided by a service provider **118**, **120**.

Cache servers **208** invisibly intercept requests for content and attempt to provide the requested content from the cache (also known as a "hit"). Note that a cache server **208** is not necessarily invisible, especially when coupled with a proxy server. In this case, the client **102**, **104**, **106** may need to be specially programmed to communicate its content requests to the proxy server in order to utilize the cache server. Cache servers **208**, as referred to in this disclosure then, may include these visible cache servers as well as invisible cache servers which transparently intercept and attempt to service content requests. Where the requested content is not in the cache (also known as a "miss"), the cache forwards the request onto the content source. When the source responds to the request by sending the content to the client **102**, **104**, **106**, the cache server **208** saves a copy of the content in its cache for later requests. In the case where a cache server is part of a proxy server, the cache/proxy server makes the request to the source on behalf of the client **102**, **104**, **106**. The source then provides the content to the cache/proxy server which caches the content and also forwards the requested content to the client **102**, **104**, **106**. An exemplary software based cache server is provided by SQUID, a program that caches Web and other Internet content in a UNIX-based proxy server closer to the user than the content-originating site. SQUID is provided as open source software and can be used under the GNU license for free software, as is known in the art.

Caches operate on two principles, temporal locality and spatial locality. Temporal locality is a theory of cache operation which holds that data recently requested will most likely be requested again. This theory dictates that a cache should store only the most recent data that has been requested and older data can be eliminated from the cache. Spatial Locality is a theory of cache operation which holds that data located near requested data (e.g. logically or sequentially) will be likely to be requested next. This theory dictates that a cache should fetch and store data in and around the requested data in addition to the requested data. In practice, this means that when a HTML Web page is requested, the cache should go ahead and request the separately stored content, i.e. begin the slow start process because more likely than not, the client **102**, **104**, **106** will request this data upon receipt of the HTML code.

While cache servers **208** alleviate some of the problems with net congestion and request response times, they do not provide a total solution. In particular, they do not provide a viable solution for dynamic content (content which continually changes, such as news, as opposed to static or fixed content). This type of content cannot be cached otherwise the requesting client **102**, **104**, **106** will receive stale data. Furthermore, cache servers **208** often cannot support the bandwidth and processing requirements of streaming media, such as video or audio, and must defer these content requests to the server **108** which are the source of the content. Cache servers **208**, in general, further lack the capability to service a large volume of requests from a large volume of clients **102**, **104**, **106** due to the immense capacity requirements. Typically, then general cache servers **208**, such as those provided by a service provider **118**, **120** will have high miss rates and low hit rates. This translates into a minimal impact on server **108** load, request response times and network **100** bandwidth. Moreover, as will be discussed below, by simply passing on requests which miss in the cache to the server **108** to handle, the server **108** is further subjected to increased security risks from the untrusted network **100** traffic which may comprise, for example, a denial of service attack or an attempt by a hacker to gain unauthorized access.

Referring now to FIG. **3**, there is depicted an enhanced content delivery system **300** which provides optimized caching of content from the server **108** to the client **102**, **104**, **106** utilizing the HTTP slow start protocol. The system **300** is typically provided as a pay-for service by a content delivery service to which particular servers **108** subscribe to in order to enhance requests made by clients **102**, **104**, **106** for their specific content. FIG. **3** depicts the identical DNS system of FIG. **2** but adds cache servers **302** and **304**, labeled "Cache C**1**" and "Cache C**2**" plus a special DNS translation server **306**, labeled "DNS C" affiliated with the content delivery service.

The depicted system **300** implements one known method of "Content Delivery." Content delivery is the service of copying the pages of a Web site to geographically dispersed cache servers **302**, **304** and, when a page is requested, dynamically identifying and serving the page from the closest cache server **302**, **304** to the requesting client **102**, **104**, **106**, enabling faster delivery. Typically, high-traffic Web site owners and service providers **118**, **120** subscribe to the services of the company that provides content delivery. A common content delivery approach involves the placement of cache servers **302**, **304** at major Internet access points around the world and the use of a special routing code embedded in the HTML Web pages that redirects a Web page request (technically, a Hypertext Transfer Protocol-HTTP-request) to the closest cache server **302**, **304**. When a client **102**, **104**, **106** requests the separately stored content of a Web site/server **108** that is "content-delivery enabled," the content delivery network redirects that client **102**, **104**, **106**- to makes its request, not from the site's originating server **108**, but to a cache server **302**, **304** closer to the user. The cache server **302**, **304** determines what content in the request exists in the cache, serves that content to the requesting client **102**, **104**, **106**, and retrieves any non-cached content from the originating server **108**. Any new content is also cached locally. Other than faster loading times, the process is generally transparent to the user, except that the URL ultimately served back to the client **102**, **104**, **106** may be different than the one initially requested. Content delivery is similar to but more selective and dynamic than the simple

copying or mirroring of a Web site to one or several geographically dispersed servers. It will further be appreciated that geographic dispersion of cache servers is generally known to those of ordinary skill in the art.

FIG. **3** further details a known method of re-directing the requests generated by the client **102**, **104**, **106** to a nearby cache server **302**, **304**. This method utilizes the HTTP slow start protocol described above. When a client **102**, **104**, **106** wishes to request content from a particular server **108**, it will obtain the IP address of the server **108**, as described above, using the normal DNS translation system. Once the server's **108** IP address is obtained, the client **102**, **104**, **106** will make its first request for the HTML code file which comprises the desired Web page. As given by the HTTP slow start protocol, the server **108** will serve the HTML code file to the client **102**, **104**, **106** and then wait for the client **102**, **104**, **106** to request the separately stored files, e.g., the image and multimedia files, etc. Normally, these requests are made in the same way that the initial content request was made, by reading each URL from the HTML code file which identifies the separately stored content and formulating a request for that URL. If the domain name for the URL of the separately stored content is the same as the domain name for the initially received HTML code file, then no further translations are necessary and the client **102**, **104**, **106** can immediately formulate a request for that separately stored content because it already has the IP address. However, if the URL of the separately stored content comprises a different domain name, then the client **102**, **104**, **106** must go through the DNS translation process again to translate the new domain name into an IP address and then formulate its requests with the appropriate IP address. The exemplary content delivery service takes advantage of this HTTP slow start protocol characteristic.

The exemplary content delivery service partners with the subscribing Web server **108** and modifies the URL's of the separately stored content within the HTML code file for the particular Web page. The modified URL's include data which will direct their translation requests to a specific DNS translation server **306**, DNS C provided by the content delivery service. DNS C is an intelligent translation server which attempts to figure out where the client **102**, **104**, **106** is geographically located and translate the URL to point to a cache server **302**, **304** which is geographically proximate to the client **102**, **104**, **106**. DNS C performs this analysis by knowing the IP address of the downstream DNS server **204**, DNS A which it assumes is located near the client **102**, **104**, **106**. By using this IP address and combining it with internal knowledge of the network **100** topology and assignment of IP addresses, DNS C **306** can determine the geographically optimal cache server **302**, **304** to serve the requested content to the client **102**, **104**, **106**.

An exemplary transaction is further depicted by FIG. **3**. In this exemplary transaction, Client **3 106** wishes to request content from Server **1 108**. Client **3 106** will establish the IP address of the source of the desired content using the standard DNS translation system described above, labeled "A1", "B", "C", "D", "E", "F", "G", "H1." Once Client **3 106** has the IP address of Server **1 108**, it will generate a request for the initial HTML code file of the desired Web page and Server **1 108** will respond with the data. Client **3 106** will then request a particular separately stored file associated with the Web page by reading the URL from the HTML code file and translating the domain name contained therein. As noted above, this URL comprises the domain name of the content delivery service as well as an identifier which identifies the content being requested (since the content delivery service typically handles many different servers **108**). Client **3 106** will generate another translation request to DNS A **204**, labeled "II" and "J." DNS A **204** will attempt to translate the given domain name but will fail because the content delivery service has set all of its translations to have a TTL=0. Therefore, DNS A **204** will be required to contact DNS C **306** which is provided by the content delivery service, labeled "K" and "L." Note that DNS A **204** may be required to contact DNS top **202** in order to locate the IP address of DNS C **306**. DNS C **306** receives the translation request and knows the IP address of DNS A **204**, which was given as the return address for the translation. Using the IP address of DNS A **204**, DNS C **306** figures out which cache server **302**, **304** is geographically proximate to Client **3 106**, in this case, Cache C**2 304**. An appropriate IP address is then returned to by DNS C **306** to DNS A **204** and subsequently returned to Client **3 106**. Client **3 106** then formulates its request for the separately stored data but, unwittingly, uses the IP address of the cache server C**2 304**. Cache server C**2 304** receives the request and serves the desired content as described above.

FIG. **3** further illustrates a second exemplary transaction sequence which discloses a flaw in the depicted content delivery method. In this example, Client **1 102** wishes to request content from Server **1 108**. Client **1 102** is a wireless or mobile client which is coupled with service provide **118** at POP**2** but is bound to DNS A **204** provided by service provider **120**. In this example, all of the translation and request transactions occur as in the above example for Client **3 106**. The translation request to identify the IP address of the separately stored content will be handled by DNS A **204** which will then hand it off to DNS C **306** as described above. However, DNS C **306** will then attempt to identify a geographically proximate cache server **302**, **304** based on the IP address of DNS A **204** which is not located near Client **1 102** in this example. Therefore DNS C **306** will return a translation directing Client **1 102** to cache server C**2 304** when in fact, the optimal cache server would have been cache server C**1 302**. With more and more wireless and mobile user utilizing the Internet, misoptimized re-direction of content delivery will happen more frequently. Furthermore, there may be cases where the Client **102**, **104**, **106** is dynamically bound to a DNS translator associated with whatever POP **114**, **116** they are connecting to. While this may appear to solve the problem, the content delivery service is still basing its redirection determination on an indirect indicator of the location of the client **102**, **104**, **106**. However, the IP address of the DNS translator may still fail to indicate the correct geographic location or the correct logical location (based on the topology of the network **100**) of the client **102**, **104**, **106** in relation to the DNS translator. A more accurate indicator of the client's **102**, **104**, **106** physical geographic location and/or network logical location is needed in order to make an accurate decision on which cache server **302**, **304** to redirect that client **102**, **104**, **106** to.

V. The First Embodiment

Referring now to FIG. **4**, there is depicted a first embodiment of an enhanced DNS system to facilitate the operation of content delivery services by eliminating the dependency on the geographic location of the downstream DNS server. In addition to what is shown in FIG. **3**, the embodiment shown in FIG. **4** further adds an edge server **402** coupled with the routing equipment **206** and POP's **114** of an affiliated service provider **120** and preferably located within the affiliated server provider's **120** facilities. In one alternative embodiment, the edge server **402** is integrated with a router. In another alternative embodiment, the edge server is integrated with a generally accessible DNS translation server such as

DNS A1 **204**. The edge server **402** is capable of monitoring the network traffic stream passing between the POP's **114** and the network **100**, including the service provider's **120** hardware, such as the cache **208** and the DNS translation server **204**, DNS A. The edge server **402** is further capable of selectively intercepting that traffic and preventing it from reaching its intended destination, modifying the intercepted traffic and reinserting the modified traffic back into the general network traffic stream. It is preferred that the facilities and capabilities of the edge server **402** be provided to content delivery services and or Web servers **108** on a fee for services basis as will be described below. Further, it is preferred that an edge server **402** be provided at every major service provider **118**, **120** so as to be able to selectively intercept network traffic at all possible POP's **114**, **116** of the network **100**.

Referring to FIG. **4**A, the edge server **402** includes a request interceptor **404**, a request modifier **406**, and a request forwarder **408**. The edge server **402** preferably includes one or more processors, a memory coupled with the processors and one or more network interfaces or other interfaces, also coupled with the processors and operative to couple or integrate the edge server **402** with the routing equipment of the service provider **120**. Optionally, the edge server **402** may include secondary storage including a second memory such as a cache memory, hard disk or other storage medium. Further, the processors of the edge server **402** may be dedicated processors to perform the various specific functions described below. The edge server **402** preferably further includes software and/or firmware provided in a read only memory or in a secondary storage which can be loaded into memory for execution or, alternatively, executed from the secondary storage by the processors, to implement the various functions as detailed below. To further improve performance, such software functionality may also be provided by application specific integrated circuits ("ASICs"). For example, an edge server **402** can comprise a Compaq TaskSmart™ Server manufactured by Compaq Corporation, located in Austin, Tex. The TaskSmart™ Server can include an Intel IXA1000 Packet Processor manufactured by Intel Corporation, located in Santa Clara, Calif. to perform the traffic monitoring and port specific traffic interception functions as well as the security applications as detailed below. The TaskSmart™ Server can further include a PAX.port 1100™ classification adapter manufactured by Solidum Corporation, located in Scotts Valley, Calif., which can receive intercepted DNS translation requests from the packet processor and, utilizing a look up table (preferably stored in a memory providing high speed access), determine whether or not the request is associated with a subscribing server **108**, as described below. The classification adapter can attempt to resolve the DNS request or hand it off to a general processor such as an Intel Pentium III™ or other general purpose processor for further operations as detailed below. An exemplary edge server **402** may have six 9.1 GB hot pluggable hard drives preferably in a RAID or other redundant configuration, two redundant hot pluggable power supplies, five 10/100 Ethernet ports and 1 GB of main memory and capable of handling in excess of 1250 requests per second.

The request interceptor **404** listens to the network traffic passing between the POP's **114** of the affiliated service provider **120** and the network **100** and selectively intercepts DNS translation requests generated by any of the clients **102**, **104** coupled with the particular affiliated service provider **120**. Such interception is preferably accomplished by identifying the destination "port" of any given data packet generated by a client **102**, **104**, alternatively other methods of identifying a packet type may be used such as by matching the destination address with a list of known DNS translation server addresses. A port in programming is a "logical connection place" and specifically, within the context of the Internet's communications protocol, TCP/IP, a port is the way a client program specifies a particular applications program on a computer in a network to receive its requests. Higher-level applications that use the TCP/IP protocol such as HTTP, or the DNS translation protocol, have ports with pre-assigned numbers. These are known as "well-known ports" and have been assigned by the Internet Assigned Numbers Authority (IANA). Other application processes are given port numbers dynamically for each connection. When a service (server program) initially is started, it is said to bind to its designated port number. As any client program wants to use that server, it also must request to bind to the designated port number. Port numbers are from 0 to 65536. Ports **0** to **1024** are reserved for use by certain privileged services. For the HTTP service, port **80** is defined as a default and it does not have to be specified in the Uniform Resource Locator (URL). In an alternative embodiment, the routing equipment **206** of the service provider **120** is programmed to forward all DNS translation requests to the edge server **402**. The request interceptor **404** can then choose which DNS translation requests to intercept as described below. This alternative routing scheme may implemented through a traffic routing protocol such as a Domain Name System Translation Protocol ("DNSTP"). This protocol is implemented in similar fashion to the Web Cache Control Protocol ("WCCP") which is used to redirect HTTP requests to proxy cache servers based on the specified port in the packet.

DNS translation requests are identified by the port number **53**. The request interceptor **404** monitors for all data traffic with the specified port number for a DNS translation request. It then is capable of intercepting DNS translation requests generated by clients **102**, **104** such as computer workstations, wireless devices or internal DNS translators on a private network. The request interceptor **404** is aware of which content delivery services subscribe to the edge server **402** service and is operative to selectively intercept DNS translation requests associated with the subscribing content delivery service, i.e. contain translations intended to be translated by the DNS translator of the content delivery service or server **108**. The request interceptor **404** may provide a table or database stored in memory or other storage device where it can look up the service subscribers to determine whether the particular DNS translation request should be intercepted. It is preferred that the request interceptor **404** make this determination at "wire speed", i.e. at a speed fast enough so as not to impact the bandwidth and throughput of the network traffic it is monitoring.

When a DNS translation request is generated by a client **102**, **104** to translate a domain name associated with the content delivery service, as described above for the modified HTTP slow start protocol, to retrieve the separately stored Web page content, that DNS translation request will be selectively intercepted by the request interceptor **404** of the edge server **402**. The interception will occur before it reaches the bound/destination DNS translation server bound to or specified by the client **102**, **104**. The request interceptor **404** will then pass the intercepted DNS translation request to the request modifier **406**.

The request modifier **406** modifies the DNS translation request to include additional information or indicia related to the client **102**, **104** so that the intelligent DNS translation server of the content delivery service or server **108** can make a more optimized decision on which of the geographically dispersed cache servers **302**, **304** would be optimal to serve

the requests of the client **102**, **104**. This additional information can include the geographic location of the POP **114** or the characteristics of the downstream network infrastructure, such as whether the client **102**, **104** is connecting to the POP **114** via a modem connection or a broadband connection or whether the client **102**, **104** is a wired or wireless client, etc. It will be appreciated that there may be other information or indicia that the edge server **402** can provide to enhance the DNS translation request and this may depend on the capabilities of the subscribing content delivery services, and all such additional indicia are contemplated. It is preferable that the subscribing content service providers are familiar with the indicia data types, content and possible encoding schemes which the edge server **402** can provide so as to establish a protocol by which the data is transferred to the subscribing content delivery service. Such information is then recognized and used by the content delivery service to enhance their redirection. For example, by knowing the geographic location of the POP **114** as provided by the edge server **402**, the content delivery service does not need to rely on the IP address of the bound DNS server from which it receives the translation request (described in more detail below) and therefore will make a more accurate determination of which cache server **302**, **304** to choose. Similarly, by knowing the capabilities of the downstream network infrastructure from the POP **114** to the client **102**, **104** as provided by the edge server **402**, the content delivery service can redirect content requests by the client **102**, **104** to a cache server **302**, **304** with capabilities which match. For example, where the POP **114** to client **102**, **104** connection is a broadband connection, the client **102**, **104** can be directed to make its requests to a cache server **302**, **304** capable of utilizing the available bandwidth to the client **102**, **104**. In contrast, where the client **102**, **104** connects to the POP **114** via a modem/standard telephone line connection, the content delivery service can direct that client **102**, **104** to make its requests to an appropriate low speed cache server **302**, **304** so as not to waste the resources of high bandwidth cache servers **302**, **304**.

Once the DNS translation request has been modified, the request modifier **406** passes the DNS translation request to the request forwarder **408**. The request forwarder places the modified DNS translation request back into the general stream of network traffic where it can be routed to its originally intended destination, i.e. the bound or specified DNS translation server **204**, **410** bound to or specified by the originating client. The DNS translation server **204**, **410** will translate the request as described above, by contacting the DNS translation server **306**, DNS C associated with the content delivery service. As described above, the intelligent DNS translation server **306** of the content delivery service will see the modified request and utilize the information/indicia included by the edge server **402** to make a more optimal translation and cache server **302**, **304** assignment.

FIG. **4** depicts an exemplary content delivery transaction between Client **1 102** and Server **1 108**. For the purposes of this example transaction, Client **1 102** is bound to DNS translation server **204**, labeled "DNS A**1**." Client **1 102** initiates the HTTP slow start protocol as described above by making its initial request for an HTML Web page from Server **1 108**. This initiation may require making several DNS translations as described above, labeled as "A", "B", "C**1**", "D", "E**1**", "F", "G", H. Once the HTML Web page has been received by Client **1 102**, it will begin to request the separately stored content associated with the Web page. As was discussed above, where Server **1 108** has been "content enabled" and subscribes to the content delivery service, the URL's of the separately stored content will comprise the domain name of the content delivery service. As well, as discussed above, these domain names will require complete DNS translation all the way back to the DNS translation server **306**, DNS C of the content delivery service because the content delivery service ensures that all of its translations have TTL=0 and therefore cannot be stored in any given downstream DNS translation server. Therefore, Client **1 102** will initiate a DNS translation for the URL of the separately stored content, labeled "I." This DNS translation request will go through the POP **114** and to the routing equipment **206** of the service provider **120**. The edge server **402** will see this DNS translation request and identify the domain name of the content service provider as a subscriber to its service. The request interceptor **404** will then intercept the DNS translation request, labeled as "J." The request interceptor **404** will pass the intercepted DNS translation request to the request modifier **406** which will append a geographic indication representing the physical geographic location of the edge server **402** or alternatively, other downstream network characteristics. Given that the edge server **402** is located geographically proximate to the POP's **114**, this information will more accurately represent the location of Client **1 102**. Alternatively, while the edge server **402** may not be geographically proximate to the POP's **114**, it may be network proximate to the POP's **114**, i.e. there may be a minimal of network infrastructure between the POP's **114** and the edge server **402**. In some instances, while one device on a network may sit physically right next to another device on the network, the network topology may dictate that data flowing between those devices flow over a circuitous route to get from one device to the other. In this case, while the devices are physically close to one another, they are not logically close to one another. The edge server **402** is preferably familiar, not only with its geographic location within the context of the network **100** as a whole, but also its logical location. Using this information, the edge server **402** can further include information as to this logical location so as to enable, not only a geographically optimal redirection of Client **1**'s **102** requests but also a network topology based optimized redirection.

The request modifier **406** will then pass the modified DNS translation request to the request forwarder **408** which will place the request back into the general traffic stream, and in this case, on its way to the original intended recipient, Client **1**'s **102** bound DNS translation server **204**, DNS A**1**, labeled as "K**1**." DNS A**1 204** will then translate the modified DNS translation request as described above and return the translation to Client **1 102**, labeled as "L**1**", "M**1**", "N**1**", "O." DNS C **306**, using the additional data provided by the edge server **402**, will supply a DNS translation redirecting Client **1**'s **102** requests to Cache C**2 304** which is the optimal cache server.

FIG. **4** further depicts a second exemplary content delivery transaction between Client **1 102** and Server **1 108**. For the purposes of this second example transaction, Client **1 102** is a wireless or mobile wired device connecting to a POP **114** provided by service provider **120** but is bound to DNS translation server **410**, labeled "DNS A**2**" provided by service provider **118**. Note that in the previous exemplary transaction above, Client **1 102** was bound to DNS A**1 204**, e.g., Client **1 102** was a stationary computer or private network subscribing to the network **100** connection services of service provider **120** and using the POP's **114** provided by the service provider **120** and that service provider's **120** DNS translation server **204**, DNS A**1**. In the current example, Client **1 102** is a subscriber to the network **100** connections services of service provider **118** but is currently roaming, i.e. geographically located in an area not serviced by a POP **116** provided by service provider **118**. Therefore Client **1 102** must use a POP

114 provided by a service provider 120, which for example, has an agreement to allow such connections from service provider's 118 customers. However, because DNS translation servers are bound to the Client 102, i.e. the address of the preferred DNS translation server is programmed into the Client 102, Client 102 will still use its programmed or bound DNS translation server, typically the DNS translation server provided by its service provider 118, in this case DNS A2 410.

As above, Client 1 102 initiates the HTTP slow start protocol as described above by making its initial request for an HTML Web page from Server 1 108. This initiation may require making several DNS translations as described above but using DNS A2 410 instead of DNS A1 204, labeled as transactions "A", "B2", "C2", "D 2 ", "E2", "F2", "G2", "H." Once the HTML Web page has been received by Client 1 102, it will begin to request the separately stored content associated with the Web page. As was discussed above, where Server 1 108 has been "content enabled" and subscribes to the content delivery service, the URL's of the separately stored content will comprise the domain name of the content delivery service. As well, as discussed above, these domain names will require complete DNS translation all the way back to the DNS translation server 306, DNS C of the content delivery service because the content delivery service ensures that all of its translations have TTL=0 and therefore cannot be stored in any given downstream DNS translation server. Therefore, Client 1 102 will initiate a DNS translation for the URL of the separately stored content, labeled "I." This DNS translation request will go through the POP 114 and to the routing equipment 206 of the service provider 120. The edge server 402 will see this DNS translation request and identify the domain name of the content service provider as a subscriber to its service. The request interceptor 404 will then intercept the DNS translation request, labeled as "J." The request interceptor 404 will pass the intercepted DNS translation request to the request modifier 406 which will append a geographic indication representing the physical geographic location of the edge server 402. Given that the edge server 402 is located geographically proximate to the POP's 114, this information will more accurately represent the location of Client 1 102. Alternatively, while the edge server 402 may not be geographically proximate to the POP's 114, it may be network proximate to the POP's 114, i.e. there may be a minimal of network infrastructure between the POP's 114 and the edge server 402. In some instances, while one device on a network may sit physically right next to another device on the network, the network topology may dictate that data flowing between those devices flow over a circuitous route to get from one device to the other. In this case, while the devices are physically close to one another, they are not logically close to one another. The edge server 402 is preferably familiar, not only with its geographic location within the context of the network 100 as a whole, but also its logical location. Using this information, the edge server 402 can further include information as to this logical location so as to enable, not only a geographically optimal redirection of Client 1's 102 requests but also a network optimized redirection.

The request modifier 406 will then pass the modified DNS translation request to the request forwarder 408 which will place the request back into the general traffic stream, and in this case, on its way to the original intended recipient, Client 1's 102 bound DNS translation server 410, DNS A2, labeled as "K2." DNS A2 410 will then translate the modified DNS translation request as described above and return the translation to Client 1 102, labeled as "L2", "M2", "N2", "O." In this case, without the additional data provided by the edge server 402, DNS C 306 would have made its redirection determination based on the IP address of DNS A2 410, as described above. This would have resulted in Client 1 102 being redirected to Cache C1 302 instead of the optimal cache for its location. However, DNS C 306, using the additional data provided by the edge server 402 is able to supply a DNS translation redirecting Client 1's 102 requests to Cache C2 304 which is the optimal cache server.

VI. The Second Embodiment

Referring to FIG. 5, there is depicted a second embodiment of an enhanced DNS system to facilitate content delivery which is not dependent upon the geographic location of the downstream DNS server and is capable of enhancing the HTTP slow start protocol.

FIG. 5 shows Clients 1 and 2 102, 104 coupled with POP's 114, POP1A and POP1B of service provider 120. As described above, service provider 120 includes routing equipment 206, Cache 208 and DNS translation server 204 to facilitate coupling the POP's 114 with the network 100. In addition, service provider 120 further includes an edge server 502 and an edge cache 508. In one alternative embodiment, the edge server 502 is integrated with a router. In another alternative embodiment, the edge server 502 is integrated with a generally accessible DNS translation server such as DNS A 204. In still another alternative embodiment, the edge server 502 can be integrated with the edge cache 504 or each can be provided as separate devices or the edge server 502 can utilize an existing cache server 208 provided by the service provider 120. For clarity, a number of the components of FIG. 4 have been omitted from FIG. 5.

Referring to FIG. 5A, the edge server 502 further includes a request interceptor 504 and an edge DNS translation server 506. It is preferred that the facilities and capabilities of the edge server 502 be provided to Web servers 108 on a subscription or fee for services basis as will be described below. It is further preferred that an edge server 502 and edge cache 508 be provided at every service provider 118, 120 or at every major network 100 intersection so as to provide coverage of every POP 114, 116 on the edge 124 of the network 100. The edge server 402 preferably includes one or more processors, a memory coupled with the processors and one or more network interfaces or other interfaces, also coupled with the processors and operative to couple or integrate the edge server 502 with the routing equipment of the service provider 120. Optionally, the edge server 502 may include secondary storage including a second memory such as a cache memory, hard disk or other storage medium. Further, the processors of the edge server 502 may be dedicated processors to perform the various specific functions described below. The edge server 502 preferably further includes software and/or firmware provided in a read only memory or in a secondary storage which can be loaded into memory for execution or, alternatively, executed from the secondary storage by the processors, to implement the various functions as detailed below. To further improve performance, such software functionality may also be provided by application specific integrated circuits ("ASICs"). For example, an edge server 502 can comprise a Compaq TaskSmart™ Server manufactured by Compaq Corporation, located in Austin, Tex. The TaskSmart™ Server can include an Intel IXA1000 Packet Processor manufactured by Intel Corporation, located in Santa Clara, Calif. to perform the traffic monitoring and port specific traffic interception functions as well as the security applications as detailed below. The TaskSmart™ Server can further include a PAX. port 1100™ classification adapter manufactured by Solidum Corporation, located in Scotts Valley, Calif., which can

receive intercepted DNS translation requests from the packet processor and, utilizing a look up table (preferably stored in a memory providing high speed access), determine whether or not the request is associated with a subscribing server **108**, as described below. The classification adapter can attempt to resolve the DNS request or hand it off to a general processor such as an Intel Pentium III™ or other general purpose processor for further operations as detailed below. An exemplary edge server **502** may have six 9.1 GB hot pluggable hard drives preferably in a RAID or other redundant configuration, two redundant hot pluggable power supplies, five 10/100 Ethernet ports and 1 GB of main memory and capable of handling in excess of 1250 requests per second.

As described above, the request interceptor **504** operates to selectively intercept DNS translation requests associated with its subscribing Web server **108** generated by clients **1** and **2 102**, **104**. Alternatively, DNS translation requests can be forwarded to the request interceptor **504** by the service provider's **120** routing equipment **206** as described above. In this embodiment, however, because the request interceptor **504** is monitoring for DNS translation requests associated with the server **108** and not some separate content delivery service, the request interceptor **504** will selectively intercept all DNS translation requests, including the initial request to retrieve the HTML Web page file and begin the HTTP slow start protocol. Again, the request interceptor **504** preferably includes a database or table stored in a memory or other storage medium which indicates the domain names or other identification information of subscribing servers **108**.

The selectively intercepted DNS translation requests are passed by the request interceptor **504** to an internal edge DNS translation server **506**. The internal edge DNS translation server **506** then translates the given domain name into the IP address of the edge cache **508** and returns this translation to the client **102**, **104**, labeled "A", "B", "C", "D." This effectively redirects the client **102**, **104** to make all of its content requests from the edge cache **508**. This differs from a proxy server, where the client **102**, **104** is not redirected but either thinks that it is communicating with the server **108** (in the case of a transparent or server side reverse proxy server) or has been specifically programmed to communicate its requests to the proxy server (in the case of a client side forward proxy server). The edge cache **508** operates as a normal cache server as described above, attempting to satisfy content requests from its cache storage. However, when the requested content is not available in the cache storage (a cache miss), the request is proxied to the server **108** by the edge cache **508** and/or edge server **502**, i.e. the edge cache **508** and/or edge server **502** make the request on behalf of the client **102**, **104**. This is in contrast to normal cache servers which forward the request from the client **102**, **104** onto the server **108** upon a cache miss.

Cache misses are handled as described above, the edge server **502** or alternatively the edge cache **508** makes its own request for the uncached content from the server **108**. Alternatively, other algorithms can be used to reduce or eliminate cache misses including mirroring the content of the server **108** coupled with periodic updates either initiated by the edge server **502** or edge cache **508** or periodically pushed to the edge cache **508** by the server **108**. In another alternative embodiment, the server **108** can update cached content when it determines that such content has changed or can provide time durations or other form of expiration notification after which the edge cache **508** purges the content. Where the content expires or is otherwise purged from the edge cache **508**, the next request for that content will miss and cause a reload of the content from the server **108**. One of ordinary skill in the art will recognize that there are many caching algorithms which may be used to maintain cache coherency. It is further preferable that the edge cache **508** maintain a replacement policy of replacing the oldest data in the cache when the cache is full. Again, one of ordinary skill in the art will recognize that there are many different cache replacement algorithms that may be used.

In this way, the edge server **502** and edge cache **508** act similarly to a forward or reverse proxy server for all of its subscribing servers **108**. Generally, a reverse proxy server is a proxy server that hides multiple source servers behind a single address. A reverse proxy server allows a content provider to serve their content from multiple host computers without requiring users to know the addresses of each of those computers. When a user makes a request to a content provider, they use the address of the reverse proxy server. The reverse proxy server intercepts the requests for content from the source and redirects those requests to the appropriate host computer within the content provider. The redirection can be based on a which machine contains the requested content or can be used to balance the request load across multiple mirrored servers. A forward proxy server sits between a workstation user and the Internet so that the enterprise can ensure security, administrative control and caching services. A forward proxy server can be associated with a gateway server which separates the enterprise network from an outside network such as the Internet. The forward proxy server can also be associated with a firewall server which protects the enterprise network from outside intrusion. Forward proxy servers accept requests from their users for Internet content and then request that content from the source on behalf of the user. The forward proxy server modifies the identity of the requester (typically by altering the internet protocol address of the requestor) to be that of the forward proxy server. A user workstation typically must be configured to use a proxy server. A forward proxy server can also be a cache server (see above).

A major distinction between the edge server **502** and a proxy server is that there is no one address of the edge server **502**. The edge server **502** effectively needs no address because it intercepts the necessary network traffic. Therefore, clients **102**, **104** do not need to know of the existence of the edge server **502** and can operate as they normally do, making content requests of servers **108**. However, when they request content from a subscribing server **108**, that content will be transparently provided instead by the edge server **502** and edge cache **508**.

Effectively, the edge server **502** and edge cache **508** isolate the sub-network comprising the service provider **120**, the POP's **114** and the clients **102**, **104** from the subscribing server **108**, i.e. the clients **102**, **104** are prevented from any direct contact with server **108**. Should the client **102**, **104** request uncached content, it is the edge cache **508** and not the client **102**, **104** which will request that content from the server **108**. Furthermore, the edge server **502** and edge cache **508** can ensure that the request is valid and legitimate before communicating with the server **108**. This "trusted" relationship between the edge server **502**/edge cache **508** and the subscribing servers acts as additional security for the servers **108**. Those servers **108** can be programmed to ignore content requests from clients **102**, **104** since they know that only valid content requests can come from an edge server **502**/edge cache **508**. Furthermore, the edge server **502** alleviates the load on the server's **108** internal DNS translation server **210** because all DNS translations will be handled by the internal edge DNS translator **506**.

The effect of the edge server **502** and edge cache **508** is faster DNS translations and better response times to requests. The edge cache **508** can serve the initial HTML Web page file to the requesting client **102**, **104** and immediately begin the process of requesting the separately stored content (if not already in the cache) from the server **108** in order to speed up the HTTP slow start protocol. Furthermore, it is preferred that the edge caches **508** located through out the edge **124** of the network **100** be capable of communicating and sharing cached data. In this way, the edge caches **508** can further reduce the demands placed on the subscribing servers **108**.

Notice, however, that because the edge server **502** intercepts translation requests, a client **102**, **104** that already knows the IP address of the server **108**, can still directly communicate with that server **108** via the network **100**. In this case, the server **108** can choose to disconnect itself from the network **100** generally (or refuse to accept any inbound content requests from the network **100** that do not originate from an edge server **502**/edge cache **508**, however such origination may be forged). The edge server **502** and edge cache **508** can then connect with the server **108** using private proprietary communications links which are not available to clients **102**, **104**.

The edge server **502** and edge cache **508** can also provide load balancing and security services to the subscribing servers. For example, open source load balancing techniques available from eddieware.org can be implemented in the edge server **502**. Where a particular server **108** comprises multiple sub-servers, the edge cache **508** can be programmed to request uncached content from the sub-servers so as to spread the load on each sub-server.

Further, because the edge server **502** acts as the DNS translator server for its subscribers, it can detect and absorb any security attacks based on the DNS system, such as distributed denial of service attacks, "DDoS." A Denial of Service Attack ("DoS" or Distributed DoS "DDoS") is an incident in which a user or organization is deprived of the services of a resource they would normally expect to have. Typically, the loss of service is the inability of a particular network service, such as e-mail, to be available or the temporary loss of all network connectivity and services. In the worst cases, for example, a Web site accessed by millions of people can occasionally be forced to temporarily cease operation. A denial of service attack can also destroy programming and files in a computer system. Although usually intentional and malicious, a denial of service attack can sometimes happen accidentally. A denial of service attack is a type of security breach to a computer system that does not usually result in the theft of information or other security loss. However, these attacks can cost the target person or company a great deal of time and money.

There are two related varieties of DDoS attacks. One attempts to shut down the DNS system in relation to the target site so that no legitimate user can obtain a valid translation and make a request from the site. Another type of DDoS attack attempts to overload the server **108** directly with a flood of content requests which exceed the capacity of the server. However, it will be appreciated that, by placing edge servers **502** and edge caches **508** so that all POP's **114**, **116** are covered and can be monitored, DDoS attacks can never reach the server **108** itself and will always be detected close to their origination by an edge server **502** where they can be stopped and isolated. It will be further apparent that where a DDoS attack cripples one edge server **502** and its associated sub-network, the remaining edge servers **502** at other service providers **118**, **120** (and their associated sub-networks) can remain operational and therefore the server **108** suffers minimal impact as a result of the DDoS attack. In addition, it is preferred that the edge server **502** and edge cache **508** provide bandwidth and processing power far in excess of that needed by the sub-network comprising the POP's **114** and service provider **120** in order to be able to absorb DDoS attacks and not be crippled by them.

It will further be appreciated, that the edge server **502** can incorporate the capabilities of the edge server **402** by providing enhanced DNS translations for subscribing content delivery services as well as the enhanced content delivery itself for subscribing servers **108**.

In addition, where client **102**, **104** is a private network such as an intranet, which has its own internal DNS translation server which is making DNS translation requests out to the network **100**, the edge server **502** can set its returned DNS translations to have a TTL=0 so that the client's **102**, **104** internal DNS server must always forward DNS translation requests to subscribing server **108** upstream where they can be intercepted by the edge server **502**. Otherwise, the caching function of the client's **102**, **104** internal DNS translation server would prevent proper DNS translations from occurring. Notice that this is not an issue in the first embodiment, because as discussed above, the content delivery service performs the DNS translations and always sets translation TTL=0 to facilitate its operation.

VII. The Third Embodiment

Referring to FIG. **6**, there is depicted an enhanced network **100** to facilitate content delivery and network **100** security. FIG. **6** depicts clients **1** and **2** **102**, **104** connected with POP's **114**, POP**2**A and POP**2**B of service provider **118** effectively forming a sub-network of the network **100**. Further, clients **3** and **4** **106**, **612** are shown connected to POP's **116**, POP**1**A and POP**1**B of service provider **120**. Further, service providers **118**, **120** each include an edge server **602**A, **602**B and an edge cache **604**A, **604**B coupled with the routing equipment **206** of the service providers **118**, **120** so as to be able to intercept all network traffic flowing between the POP's **114**, **116** and the network **100**. In one alternative embodiment, the edge server **602** is integrated with a router. In another alternative embodiment, the edge server **602** is integrated with a generally accessible DNS translation server such as DNS A**1** **204** or DNS A**2** **410**. In still another alternative embodiment, the edge server **602** is integrated with the edge cache **604**, or alternatively they can be implemented as separate devices or the edge server **602** can utilize a cache server **208** provided by the service provider **118**, **120** (not showing in FIG. **6**). It is preferred that the facilities and capabilities of the edge servers **602** be provided to Web servers **108** on a subscription or fee for services basis as will be described below. It is further preferred that an edge server **602** and edge cache **604** be provided at every service provider **118**, **120** or at every major network **100** intersection so as to provide coverage of every POP **114**, **116** on the edge **124** of the network **100**, i.e. to minimize the size of the sub-network downstream from the edge server **602**.

Referring to FIG. **6**A, the edge server **602** further includes a request filter **606**, a request interceptor **608** and a proxy server and/or internal DNS translation server **610**. The edge server **602** is capable of operating similarly to the edge server **402** and **502** of the previous embodiments. However, the edge server **602** is further capable of intercepting data traffic at the packet level based on the source or destination IP address contained within the packets flowing past the edge server **602**. In this way, the edge server **602** is able to provide complete isolation of its subscribing servers **108**, **110**. Any network

traffic destined for a subscribing server **108**, **110** can be intercepted by the edge server **602** and acted upon. The edge server **602** preferably includes one or more processors, a memory coupled with the processors and one or more network interfaces or other interfaces, also coupled with the processors and operative to couple or integrate the edge server **602** with the routing equipment of the service provider **120**. Optionally, the edge server **602** may include secondary storage including a second memory such as a cache memory, hard disk or other storage medium. Further, the processors of the edge server **602** may be dedicated processors to perform the various specific functions described below. The edge server **602** preferably further includes software and/or firmware provided in a read only memory or in a secondary storage which can be loaded into memory for execution or, alternatively, executed from the secondary storage by the processors, to implement the various functions as detailed below. To further improve performance, such software functionality may also be provided by application specific integrated circuits ("ASICs"). For example, an edge server **602** can comprise a Compaq TaskSmart™ Server manufactured by Compaq Corporation, located in Austin, Tex. The TaskSmart™ Server can include an Intel IXP 1200 Packet Processor manufactured by Intel Corporation, located in Santa Clara, Calif. to perform the traffic monitoring and port specific traffic interception functions as well as the security applications as detailed below. The TaskSmart™ Server can further include a PAX.port 1100™ classification adapter manufactured by Solidum Corporation, located in Scotts Valley, Calif., which can receive intercepted DNS translation requests from the packet processor and, utilizing a look up table (preferably stored in a memory providing high speed access), determine whether or not the request is associated with a subscribing server **108**, as described below. The classification adapter can attempt to resolve the DNS request or hand it off to a general processor such as an Intel Pentium III™ or other general purpose processor for further operations as detailed below. An exemplary edge server **602** may have six 9.1 GB hot pluggable hard drives preferably in a RAID or other redundant configuration, two redundant hot pluggable power supplies, five 10/100 Ethernet ports and 1 GB of main memory and capable of handling in excess of 1250 requests per second.

For valid content requests from clients **102**, **104**, **106**, **612**, the edge server **602** in combination with the edge cache **604** acts just like the edge server **502** and edge cache **508** in the previous embodiment. Such requests will be redirected and served from the edge cache **604**. Again an edge cache **604**A at one service provider **118** can share cached data from another edge cache **604**B located at another service provider **120**. In this way, a comprehensive content delivery service is created which completely isolates the core **122** of the network **100** from untrusted and unregulated client **102**, **104**, **106**, **602** generated network traffic. Such traffic is isolated at the edge **124** of the network **100** within the sub-network below, i.e. downstream from the edge server **602** where it can be contained, monitored and serviced more efficiently. In terms of the economics of the network **100** then, the load on the expensive high bandwidth communications resources located at the core **122** of the network **100** is reduced and maintained at the edge **124** of the network where bandwidth is less expensive.

In addition, the edge server's **602** packet level filter **606** prevents any client **102**, **104**, **106**, **612** from directly communicating with any subscribing server **108**, **110** even if that client **102**, **104**, **106**, **612** has the IP address of the server **108**, **110**. The packet level filter **606** will see the destination IP address in the network traffic and selectively intercept that traffic.

Once traffic is intercepted, the edge server **602** can perform many value added services. As described above, the edge server **602** can perform DNS translations and redirect clients **102**, **104**, **106**, **612** to make their content requests to the edge cache **604**. The edge server **602** can also monitor the data transmission being generated by clients **102**, **104**, **106**, **602** for malicious program code, i.e. program code that has been previously identified (by the server **108** or a third party such as a virus watch service) as unwanted, harmful, or destructive such as viruses or other unauthorized data being transmitted. For example, if the edge server **602**A detects a data packet whose origin address could not have come from the downstream network or POP's **114** to which it is connected, the edge server **602**A knows that this data packet must be a forgery and can eradicate it or prevent it from reaching the network **100**. For example, where a computer hacker surreptitiously installs a program on client **1102** to generate a DDoS attack on server **1108** but appear as if the attack is coming from client **4 612**, the edge server **602**A will see the packets generated by Client **1 102** and also see that they contain a source address associated with a client, in this case client **4 612**, which based on the address, could not have come from any POP **114** of the service provider **118** to which the edge server **602**A is connected. In this case, the edge server **602**A can eliminate that packet and then attempt to identify the actual originating client, in this case client **1 102**, so that the attack can be stopped and investigated. In addition, because general network traffic is unable to reach the subscribing servers **108**, **110**, hackers would be unable to access those servers in attempts to steal valuable data such as credit card numbers.

Furthermore, to enhance security, as described above, the connections between the edge servers **602**A, **602**B and edge caches **604**A, **604**B can alternatively be made through private communications links instead of the publicly accessible network **100**. In this way, only trusted communications over secure communications links can reach the servers **108**, **110**. This security in combination with the multiple dispersed edge servers **602**A, **602**B and edge caches **604**A, **604**B covering the edge **124** of the network **100** ensures that the subscribing servers **108**, **110** will be able to serve their content under high demand and despite security threats.

In operation, the request filter **606** pre-filters traffic before receipt by the request interceptor **608**. The request filter **606** preferably provides subscriber detection, "ingress filtering" capability, and cache hit determination. The request filter **606** first determines whether or not the traffic it is monitoring is associated with a subscribing/affiliated server **108**, **110**. If not, this traffic is ignored and allowed to proceed to its final destination. The request filter **606** preferably comprises a table or database of subscribers stored in a memory or other storage device. If the traffic is associated with a subscribing server **108**, **110**, the request filter **606** then performs ingress filtering by determining whether the packet originated downstream from the edge server **602**, i.e. from the downstream sub-network, the POP's **114**, **116** affiliated with this particular edge server **602** or from upstream which indicates that they did not originate from an affiliated POP **114**, **116** and therefore are suspect and most likely invalid. Packets originating from upstream are preferably eradicated. Valid downstream originating packets are then analyzed for the content/nature of the packet. If the packet comprises a content request, the request filter **606** can determine if the request can be satisfied by the edge cache **604**. Preferably, the request filter **606** maintains a table or database in memory or other storage medium of the edge cache **604** contents. If the packet contains a request that can be satisfied from the edge cache **604**, the

request filter **606** will hand the packet/request off to the edge cache **604**. The edge cache **604** operates similarly to the edge cache **508** of the above embodiment. If the packet comprises a DNS translation request or a content request which cannot be satisfied by the edge cache **604**, the request filter **606** hands the packet/request off to the internal request transmitter/proxy server/DNS translation server **610** to proxy, e.g. transmit, the request to the intended server or provide a DNS translation. The server **108** responds with the requested content to the edge server **602** and/or edge cache **604** which then returns the response to the requesting client **102**, **104**, **106**, **612** and/or caches the response. It is preferred that the request filter **606** be able to perform its functions at "wire speed", i.e. a speed at which will have minimal impact on network **100** bandwidth and throughput. The request filter **606** then further alleviates the processing load on the internal DNS translator/proxy server **610** of the edge server **602**.

It will be appreciated that, in any of the above embodiments, additional upstream edge servers and edge caches can be provided at major peering points to provide a layered hierarchy of cache storage tiers which further enhances the response times. In addition, a hierarchy of edge servers and edge caches can be used to handle any overload of one or more downstream edge servers and edge caches or to handle spill over of capacity or even a complete failure of one or more edge servers or edge caches. By forming a hierarchy of edge servers and edge caches, the network **100** and service provider **118**, **120** fault tolerance is increased and enhanced.

The edge servers and edge caches therefore act similarly to proxy servers. However, where a forward proxy server alters the source address of a given content request (effectively making that request on behalf of a client), an edge server merely adds additional data to the source address which can then be used by upstream content delivery services for more accurate redirection or intercepts and substitutes the address translation transactions to redirect a client to make its requests from a nearby edge cache. Therefore, there is no need to intercept content requests since those requests will have been already directed to the edge cache. While a reverse proxy server is typically tightly bound with a group of servers which belong to a single entity or comprise a single Web site, the edge server performs reverse proxy functions but for any entity or Web site which subscribes to the service. Furthermore, no changes are required to the client or the subscribing servers. Once the subscriber tables are updated within the edge servers, the edge server will then start to perform its functions on the network traffic of the subscribing Web server. The subscribing Web server does not need to alter their Web site in any way and the client does not need to be pre-programmed to communicate with the edge server.

Further the network of edge servers and edge caches located at every major network intersection so as to cover every POP, thereby minimizing the size of the sub-network downstream from the edge server, forms a security barrier which isolates the core infrastructure and servers of the network/internet from the edge where the clients are located. In addition to isolation, network performance is enhanced by virtually placing the content and services of core content providers at network-logically and physically-geographic proximate locations with respect to the clients. Content is placed as close as possible to the requesters of that content resulting in enhanced response times and enhanced throughput. This results in reduced load, congestion and bandwidth consumption of the expensive high capacity backbone links which form the core of the network. Trivial network traffic is maintained at the edge of the network speeding response times and throughput. In addition, the edge caches are capable of communicating with one another and sharing cached data, thereby greatly enhancing the caching effect and further reducing the load on the core of the network.

By further making the edge servers more intelligent, such as by adding additional processing capacity, dynamic load balancing services can be provided to the subscribing servers which can respond to changing demands for content. The edge servers and edge caches are further located to minimize the number of downstream clients, thereby forming sub-networks which can isolate and contain network traffic. This allows security services to be provided by isolating security threats to the smallest possible portion of the network generally while leaving the remaining portions of the network fully operational. Further, would be hackers are prevented from being able to directly access a subscribing server in an attempt to break in and steal valuable data. Therefore, even where a particular server has a security hole, the data stored there will still be protected. In addition, the edge server is aware of its physical/geographic location and its logical location within the network hierarchy allowing it to enhance content redirection services as clients switch to wireless connectivity or otherwise become more mobile in relation to their service providers. Finally, the provision of a decentralized DNS enhancement system, as provided by the presently preferred embodiments, reduces the load on the existing DNS system and on subscribing servers' internal DNS systems as well as provides a distributed defense against DNS based denial of service attacks. Such attacks can be isolated to the smallest portion of the network possible and closest to the attack's source while the remaining portions of the network remain unaffected. Further, by isolating the attack, the source of the attack can be more easily pinpointed and investigated. Traffic can be monitored for unauthorized or malicious program code, i.e. program code previously identified as unwanted, harmful or destructive, such as the placement of zombies or virus programs. Such programs can be detected and eradicated before they can make it to their intended destination.

In addition, the provision of the decentralized DNS enhancement system, as provided by the presently preferred embodiments, provides an infrastructure which may be used to supplant the existing DNS system and allow the creation of new domain names and a new domain name allocation service. New services such as a keyword based DNS system may also be provided to further increase the ease of use of the network **100** and which do not rely on any modifications to a user's Web browser program (i.e. remain transparent to both the client and the content provider). A user's attempt to request content from a subscribing content provider using a new domain name provided by this new DNS system would be intercepted prior to reaching the existing DNS system and be properly translated so as to direct the user to the content provider. Alternatively, the request may be redirected to an edge server and edge cache which proxies the request for the user to the content provider. Such a system allows the content provider to remain a part of the network **100**, i.e. remain connected to the Internet and maintain their access within the existing DNS system, or they may choose to completely disconnect from the network **100** altogether and utilize proprietary communications links to the network of edge servers and edge caches to provide users/clients with access to their content.

It will be further appreciated by one of ordinary skill in the art that the provision of numerous distributed edge servers and edge caches encircling the core of the network **100** provides a secure decentralized infrastructure on which service applications can be built. Through the provision of additional application and data processing capabilities within the edge

servers, service applications such as user applications (for example, content monitoring/filtering, advertising filtering, privacy management and network personalization), e-commerce applications (such as regional and local electronic store fronts, distributed shopping carts or advertising distribution), distributed processing applications, database access applications (such as distributed enterprise database access), communications applications (such as electronic mail, identity authentication/digital signatures, anti-spam filtering and spam source detection, voice telephony and instant messaging), search engine applications, multimedia distribution applications (such as MP3 or MPEG distribution and content adaptation), push content applications (such as stock quotes, news or other dynamic data distribution), network applications (such as on-demand/dynamic virtual private networks and network/enterprise security), etc. can be implemented. These applications can be implemented with minimal hardware at the network **100** core **122** because much of the processing load and bandwidth demands are distributed out at the edge **124** of the network **100**. Further, any application where decentralization of the client interface from the back-end processing enhances the application can be applied on a wide scale to the edge server infrastructure to reduce the centralized demands on the service providers.

VIII. The Fourth Embodiment

The above embodiments are all based upon the interception of packets off the network and the subsequent processing and determination of a course of action to take with those intercepted packets. As was described above, this may include selective interception of packets, selective modification of those intercepted packets and the subsequent release/reinsertion of the modified packets back into the general stream of network traffic. Selective interception includes the temporary interception of all packets presented on the inputs of the edge device and performing an initial evaluation to determine whether the packet should be immediately released or permanently intercepted for further processing. The determination of whether or not a particular packet should be permanently intercepted and the further processing/modification and/or subsequent release of the temporarily held packet are discussed in more detail below.

The embodiments disclosed above involve coupling an edge server or similar device with the routing equipment of an Internet service provider to facilitate packet interception at a point as close to the POP's as possible. This allows for early and reliable packet interception and further ensures some measure of reliability in determining the origination of a particular packet, the advantages of which are described above. Alternatively, it was noted above that the interception of packets may also take place at other upstream locations. It will be appreciated that the optimal placement of the disclosed embodiments is at any point within the network traffic flow which is most likely to see all of the relevant packets that are to be intercepted flow through.

In addition to the above embodiments, many other solutions to the Internet's problems involve the use of such edge/packet interception devices to process, route and deliver packets. Examples would include web switches, server load balancing, DNS enhancement, quality of service enhancement, and content delivery enhancement such as caching and mirroring applications. One exemplary device is the WebSwitch, manufactured by Alteon Web Systems, located in San Jose, Calif., which looks for packets with a port address of 53 indicating a DNS request. The Redirector intercepts and redirects those DNS requests to alternate DNS servers. Another exemplary device is the Edge Server, manufactured by CloudShield Technologies, Inc., located in San Jose, Calif. (and described in more detail above). The Edge Server also intercepts DNS requests but performs its interception selectively by analyzing the application data layer of the packets in addition to the header data layer. Any portion of the packet may be analyzed. Implementing these applications and enhancements requires intercepting packets as they flow over the network prior to their receipt by their intended destination, processing the packet contents to determine a course of action and then performing that course of action, as was described.

As described above, it is optimal, in most Internet enhancement applications, to intercept and process packets close to their source before they enter the general stream of Internet traffic and diverge or alternatively, at one or more "choke points" through which all of the relevant packets must flow. For many of the above applications, it is desirable to intercept packets before they are routed beyond the edge of the Internet. However, as more and more of these solutions are developed, there will be more and more demand to intercept and process packets at the edge of the Internet or at critical packet switching choke points, such as Network Access Points ("NAP's"). In reality, this means that more and more solution providers will want access to the equipment of the Internet Service Providers or NAP providers, at the edge of the Internet or in control of the desired choke points, to install their packet interception devices, causing new problems in the process.

As will be appreciated, in order to intercept a packet flowing from one point to another, an intercepting device must be logically and/or physically installed in series with the packet flow so that all packets must flow through the device. The intercepting device then intercepts the packets as they flow from point to point and determines what actions it will take with the packets. The cost of introducing this intercepting device, then, is the latency added by the processing time that it takes to determine the course of action. This latency can be quantified by the degradation in packet throughput from the ideal "wire speed" caused by the processing time of the device. As can be seen, as more and more intercepting devices are introduced, each device must be connected in series with the others and each adds additional processing latency to the overall packet flow. Further, if the processing performed by such devices cannot match or exceed the speed at which data is flowing, the wire speed, network performance will suffer. Internet service providers may be unwilling to introduce such additional overhead within their sub-networks and therefore may refuse to allow edge devices to be installed. Further, even if the benefits outweigh the additional latencies introduced, each additional device adds an additional possible failure point which can bring down the service providers entire network, a risk Internet service providers may be unwilling to take. In addition, since each intercepting device is connected in series with the others, each device (except for the first device in the chain) must wait for the upstream devices to process a given packet before processing the packet itself. This may cause contention for the service provider when determining which device to place ahead of another in the packet flow. Finally, the physical and/or electrical limitations of the service provider's hardware may prevent the installation of multiple edge/intercepting devices.

As can be seen from the above embodiments, edge devices generally perform the basic functions of intercepting packets from the general flow of network traffic, processing the intercepted packets and potentially reinserting new or modified packets back into the general flow of network traffic. In general, it is the choice of which packets to intercept and the

subsequent processing performed by each edge/packet intercepting device on the intercepted packets which distinguishes each device.

Referring now to FIG. **7**, there is shown a fourth embodiment of an edge adapter/packet interceptor system **700** which provides a scalable and reliable connection for multiple edge/packet interception devices to the routing equipment of the Internet Service Provider without introducing additional network latency or potential failure points to the packet flow. The edge adapter/packet interceptor system **700** decouples the interception of packets from the processing of those intercepted packets and provides a generic packet interception and pre-processing engine which can be utilized in parallel by multiple edge devices to implement their respective functionality/applications. As was noted above, the previous embodiments can alternatively process packets which are forwarded to them by the ISP's routing equipment. The edge adapter/packet interceptor system **700** provides this interception and forwarding service. Further, the system **700** provides a standardized interface to a network such as the Internet for the connection of edge type or packet intercepting devices making it easier for an ISP to offer the services/enhancements of many different providers. In addition, the system **700** is capable of processing packets at, or in excess, of wire speed so as not to degrade network performance from the optimal. In one embodiment, the system **700** is selectively transparent to the network. Where the device is to be visible, it can be addressed just like any other device coupled with the network. However, this addressability may be disabled to make the device invisible to other network devices.

The system **700** includes a router **702** and a packet interceptor adapter **720** coupled with the router. The router **702** is preferably located within an ISP located at the edge of a network **100**, preferably the Internet **100** as described above. Alternatively, the network **100** can be a private intranet or extranet as described above. Further, the network **100** may be an optical based network **100** or electrical, or combinations thereof. Exemplary routers **702** include: the Cisco 12000 Series GSR Internet router, manufactured by Cisco Systems, Inc., located in San Jose, Calif.; the Cisco 10000 Edge Services Router, manufactured by Cisco Systems, Inc., located in San Jose, Calif.; the Cisco 7500 Series router, manufactured by Cisco Systems, Inc., located in San Jose, Calif.; the Passport 8600 Routing Switch, manufactured by Nortel Networks, Inc., located in Saint John, Canada; the GRF Multi-Gigabit Router GRF 1600, manufactured by Lucent Technologies, Inc., located in Murray Hill, N.J.; and the M20, M40, and M160 Internet Backbone Routers, manufactured by Juniper Networks, Inc., located in Sunnyvale, Calif.

In the preferred embodiments, the adapter **720**, which preferably comprises an adapter card (also known as a "board" or "blade") inserted into the router's **702** expansion slot backplane, is the Intelligent Packet Architecture™ adapter manufactured by CloudShield Technologies, Inc., located in San Jose, Calif. The adapter **720** is coupled with the router **702** so as to be able to intercept packets **704** before they are routed by the router **702** over the network **100**. In alternative embodiments, the adapter **720** may comprise a stand alone device either coupled with the router **702** or coupled in line with the router **702** on the network **100**. In the latter case, the adapter **720** is capable of interfacing with the network **100**, whether optical or electrical.

The router **702** further includes a network interface **710**, a routing table **728** and routing logic **730**. As is known, and described above, packets **704** enter the router **702** from the network **100** via the network interface **710**. In normal operation, where there is no edge adapter **720** installed, the packet **704** would be routed to the next network **100** node by the routing table **728** and routing logic **730** which analyze the destination internet protocol address of the packet **704** and determine where the packet **704** should be sent next within the network **100**. It will be appreciated that the routing logic **730** and routing table **728** can further implement policy based routing and quality of service protocols as are known in the art.

The logical architecture of the packet interceptor adapter **720** includes a packet analyzer **712**, a buffer **714**, a rules processor **716** and an external device interface **718**. The edge adapter **720** further includes a management interface **722** and interfaces **734** for external edge devices **724**. The packet analyzer **712** is coupled with the network interface **710** of the router **702** so as to be able to intercept packets **704** before they can be routed by the routing logic **730** and routing table **728**. Further, the adapter **720** includes an interface **736** with the routing table **728** and routing logic **730** of the router **702** to send packets to be routed. This arrangement logically places the edge adapter **720** between the network interface **100** and the routing table **728** and routing logic **730**. In alternative embodiments, the routing table **728** and routing logic **730** of the router **702** can be configured to automatically forward all incoming packets out to the edge adapter **720** first and then route packets received from the edge adapter **720** as normal over the network **100**.

As packets **704** enter the router **702**, they are temporarily diverted to the packet analyzer **712** which determines whether or not the packet is to be intercepted. This determination is made in conjunction with the rules processor **716** by analyzing the header data **706** and application data **707** contained with the packet **704** according to pre-defined rules contained within the rules processor. As will be described in more detail below, if it is determined that the packet **704** is not to be intercepted, it is released to the routing logic **730** of the router **702** for normal routing. If the packet **704** is to be intercepted, it is stored in the buffer **714** for further processing and analysis by the rules processor **716** and interceptor/analyzer **712** or one or more of the external devices **724**.

Interception and subsequent processing of packets **704** is based on the application of rules to any of the various layers of data contained with the packet **704**. As is known in the art, the Internet utilizes the Transport Control Protocol/Internet Protocol ("TCP/IP") protocols to exchange information among connected clients and server computer systems. Further, it is known that the Internet supports several application protocols such as hypertext transfer protocol ("HTTP") or file transfer protocol ("FTP"). The ability of the Internet to support different application uses is based the concept of protocol "layering", also referred to as the layered protocol stack. Layering is the idea of designing several individual pieces of software, where each one performs one out of a set of functions, instead of designing one piece of software which performs all of the functions. Layering simplifies software development and reduces complexity.

In a layered software architecture, many different software components interface with one another to achieve the desired functionality, e.g. allowing a user to communicate over a network. A well known layered network software architecture has the following five layers:

Layer 5: Application Layer
Layer 4: Transport Layer
Layer 3: Routing Layer
Layer 2: Switching Layer
Layer 1: Interface Layer

The application layer or layer 5 comprises the particular application program that the user is running on their computer

such as a web browser or a web server. The application layer can be thought of as interfacing between the transport layer and a sixth layer which is the end user. Users communicate with the application layer which in turn delivers/receives data to/from the transport layer. Many different applications can be operating at any given time. Particular applications are assigned port numbers or addresses which the transport layer uses to uniquely identify and communicate with the applications. Well known applications have fixed port addresses known as "well known ports." These ports are assigned by the Internet Assigned Numbers Authority (IANA).

The transport layer, layer 4, interfaces the user applications to the network infrastructure and structures the data for transmission by the routing layer. An exemplary transport layer is the Transport Control Protocol ("TCP") described above. TCP is a connection oriented protocol requiring the establishment of parameters for transmission prior to the exchange of data. For more information on the TCP protocol, see TRANSMISSION CONTROL PROTOCOL, DARPA INTERNET PROGRAM, PROTOCOL SPECIFICATION, September 1981, prepared for Defense Advanced Research Projects Agency, Information Processing Techniques Office by Information Sciences Institute, University of Southern Calif. As described above, the transport layer interfaces with particular applications using a port number or address.

The routing layer, layer 3, facilitates the delivery of data over the network and provides the logical network infrastructure which allows for network partitions or sub-networks, scalability, security and quality of service ("QoS"). An exemplary layer 3 protocol is the Internet Protocol ("IP") discussed above. The IP layer 3 protocol relies on IP addresses to route and deliver packets from their source to their destination.

The switching layer, layer 2, allows end station addressing and attachment. Layer 2 relies on unique Media Access Control ("MAC") addresses assigned to each computer connected to the network. The interface layer, layer 1, is responsible for device connectivity and usually refers to physical hardware/firmware which is used to build the physical network. Layers 1 and 2 are usually integrated and operate together. An exemplary layer 1 is provided by Ethernet type networks. Other layer 1 network hardware includes token ring or fiber optic based networks. The layer 1 physical network hardware provides a unique MAC address for use by layer 2. For example, every Ethernet interface card includes a unique Ethernet address built into it.

The software which implements each layer only has to know how to interface with its adjacent layers, i.e. the application layer only has to know how to interact with the user and the transport layer. This, for example, alleviates the need for a web browser to know how to communicate over all of the various types of physical network hardware (layers 1 and 2) that could be attached to the particular computer. For example, the web browser program, Internet Explorer™, manufactured by Microsoft Corporation, located in Redmond, Wash., does not need to know whether a user is connected to the Internet via local area network or a modem. The routing, switching and interface layers handle this.

In practice, the user communicates with the application layer which generates application data to be sent to a destination. For example, the user enters a Uniform Resource Locator ("URL") into his web browser. The URL identifies a particular world wide web page to be retrieved from a particular web server computer. The web browser then generates a request to that web server for the desired web page, known as a "GET" request. This application data, in this case the URL and the request command, is passed to the transport layer. The transport layer breaks the data down into one or more packets which can be sent over the network. A packet is the unit of data which can be transferred over the network infrastructure and is discussed in more detail below. The transport layer figures out how many packets are needed, and organizes and identifies them so they can be reassembled at the destination. In the case of a URL, only one packet may be necessary to contain the data. The transport layer then passes each packet to the routing layer. The routing layer adds a source and destination address to each packet and hands the packet off to the switching layer. The switching layer in combination with the interface layer transmits the packet onto the network. Once on the network, network hardware such as routers and switches route and direct the packet to the proper destination based on the IP and MAC addresses.

At the destination, as each packet is received, the interface and switching layers pull them off the network hardware based on the MAC address and hand them up to the routing layer. The routing layer ensures that the particular packet has reached the right IP address and then passes the packet up to the transport layer. The transport layer receives and assembles all of the packets. If any packets are missing (due to a network error for example), the transport layer re-requests the missing packet from the source by generating a special request packet. Once the application data has been received and assembled, it is passed up to the application layer. For example, the destination may be a web server, within or external to the device, which receives the URL and request command for further processing.

Notice that the routing, switching and interface layers, as used with the IP protocol, implement a connectionless protocol. These three layers do not guarantee delivery of a packet or set of packets or guarantee how (i.e., over what route or in what order) or when those packets will arrive. They perform a specific function of attempting to deliver a given packet to its intended destination. It is up to the transport layer to make sure that the overall communication is successful.

Another layered architecture which defines seven different layers is the Open Systems Interconnect ("OSI") model. These layers include the application layer, the presentation layer, the session layer, the transport layer, the network layer, the data-link layer and the physical later. For more information on layered network architectures, see Layer 3 Switching, An Introduction, 3-Com Technical Papers, published by 3-Com Corporation, Santa Clara, Calif.

As mentioned above, the transport layer breaks the application data down into packets. The routing layer then attempts to deliver each packet to its destination. A packet is the unit of data upon which the routing layer, layer 3, operates. Packet switching is the scheme by which the packets are routed and delivered to their destination. A packet also logically comprises layers which correspond to the layers of the software architecture described above. In reality, each layer of the packet is really the pieces of information added by each of the software layers as the packet is passed along.

A packet can also logically be thought of as having two distinct layers or parts, the application data and the header data. The application data is the data provided by the application layer, layer 5, as broken down by the transport layer, layer 4, for transmission. This may also be referred to as the "payload". This may be a URL, part of a web page, part of an email, part of a telnet terminal communications, part of a FTP file transfer, etc. The header layer comprises all of the other addressing information provided by layers 1-4 which is used to get the packet from its source application to its destination application. This includes the TCP port address (layer 4), packet sequencing data (layer 4), IP addresses of the source and destination computers (layer 3) and the MAC address

(layers 2 and 1). While the above layering architecture and packet structure are preferred, one of ordinary skill in the art will appreciate that there are many different known network architectures and software models which can be used with the disclosed embodiments, such as the User Datagram Protocol ("UDP") which is similar to TCP and transmits datagrams.

Packets are delivered to their destination over the network by routers and switches. These devices access the different layers within the packet to determine where to send the packet. A switch is usually associated with layer 2. A switch reads the layer 2, MAC address, from the packet and delivers the packet directly to the correct device. If the switch determines that the device with the correct MAC address is not connected to it, then the switch delivers the packet to another switch and so on until the packet is delivered to its intended destination.

A router is usually associated with layer 3. A router reads the layer 3 IP address of the destination from the packet and, as described above, determines the route, and specifically the next adjacent network point to which the packet should be sent. Routers typically require routing logic which is programmed with knowledge of the network and knows how to determine the route over which to send a particular packet. This routing logic typically includes a routing table which identifies the routes for particular IP addresses. Many routers also factor in network usage information so as to route packets over less congested routes. A router ultimately delivers the packet to a switch which delivers the packet to its final destination. In some cases, a router and switch may be combined. A router may also be used as a firewall or proxy server (reverse or forward), blocking and/or re-routing packets based on their source and/or destination IP addresses.

Referring back to FIG. **7**, all packets **704** which are flowing through the particular network node implemented by the router **702** first flow through the packet analyzer **720**. Each packet **704** is stored in the buffer **714** for processing by the rules processor **716** and packet analyzer **720**. The rules processor **716** contains one or more rule sets **726** which are used by the packet analyzer **720**. Each rule set **726** contains one or more rules **732** which are applied by the packet analyzer to the buffered packet **704**. Essentially, each rule **732**, described in more detail below, consists of a function and an action to be taken based on the results of the evaluation of the function. The function may involve analysis or examination of one or more portions of the packet **704**, and typically comprises a comparison operation which compares one or more portions of the packet **704** with one or more pre-defined values to determine whether or not the associated action should be taken. The packet analyzer **720** is capable of analyzing or examining any part of the packet **704**, including any data from the header data layer **706** or application data layer **708** (including all 5 or 7 layers as described above). For example, one rule **732** may be to compare the port address from the header data layer **706** to a value of 80 to determine if this is an HTTP packet. Further, the rule set **726** may contain several rules which compare different parts of the packet **704** to different values, in effect creating a compound function. An example would be to determine not only that a particular packet **704** is an HTTP packet but also to then determine the URL contained within the application data layer **708**. In addition, a function of a rule **732** may also use the result of another rule **732** in its rule set **726** or another rule set **726** as an input to be evaluated. In addition, state information representing the analysis of past packets may be stored and used by rules **732** to analyze future packets. This functionality, for example, may be used to monitor for sequences of particular packets **704** flowing over the network **100**.

Once the function of a rule **732** has been processed/evaluated, the packet analyzer **720** will take the desired course of action or actions as dictated by the rule **732**. The packer analyzer **720** is capable of taking several basic actions independently or in combination. Further, these actions may be implemented as part of a rule or separately implemented and triggered via an external command from the management interface **722** or from one or more of the external devices **724**. The basic actions that the packet analyzer **720** can take include: capturing a packet to the buffer **714** for further operation; releasing the buffered packet **704** to the routing logic **730**; forwarding a copy of the buffered packet **704** to one or more of the external devices **724** (described in more detail below); deleting the buffered packet **704** from the buffer **714**; modifying the buffered packet **704**; and replacing the buffered packet **704** with a new packet received from one of the external devices **724**. In addition to or alternatively instead of taking these basic actions, the packet analyzer **720** may log or otherwise store information about the packet, including storing a copy of the packet itself. This log may be used for subsequent processing/analysis of other packets or for reporting purposes. As can be seen, one or more of these basic actions can be combined with others to create compound actions to be taken on a given packet **704**. For example, a compound action could include capturing a given packet **704** which satisfied the operation of a particular rule **732**, forwarding a copy of the captured packet **704** to one of the external devices **724** for further processing, and in response to a command received from that external device **724** (as determined by its own processing of the copy of the packet **704**), modifying the IP address and payload of the captured packet **704** and releasing the modified packet **704** to the routing logic **730** of the router **702**. It will be appreciated that such complex actions and compound operations can be directly implemented as opposed to being implemented via a combination of basic actions.

In addition, data about the packet **704** may be stored in a memory for use by other rules, for processing the current or future packets **704**. This allows stateful processing, i.e. state based rules, of packets **704** as they flow through the packet analyzer **720**. By storing information about past packet **704** activity that the packet analyzer **720** has processed, rules **732** may be implemented which take into account historical packet activity. An additional basic operation of the packet analyzer **720** is provided for storing a one or more attributes, or an entire copy, of the captured packet in a state memory. For example, a rule **732** may defined to watch for multiple malformed packets **704**. Where a single malformed packet **704** is received, the rule **732** will take no action as this may be due to a random network error. However, data regarding that malformed packet, or the entire packet itself, will be stored. If another malformed packet **704**, similar to the first malformed packet **704**, is subsequently received, the rule **732** may determine that some malicious activity is underway and delete the second packet **704**. Other state information may also be recorded such as a time stamp. This allows the memory to be periodically purged, or alternatively, allows the rule **732** to take into account the frequency of occurrence, etc.

The packet analyzer **720** is fully programmable and rules **732** must be defined for each desired action and contingency. If no rules are defined for a particular contingency, the packet analyzer **720** will take the default action of releasing the packet. In this way, an unprogrammed device will not impede network traffic. For example, where a given packet **704** fails to trigger any rules **732**, that packet **704** can be automatically released to the routing logic **730** of the router **702** through the operation of a default action. In one embodiment, the default

action is part of a default rule **732**, such as a rule **732** which has an evaluation function which always triggers the associated action. In this way, packets **704**, for which the packet analyzer **720** or no external device **724** wishes to intercept are simply released to the routing logic **703** for routing as normal. In an alternate embodiment, an unprogrammed packet analyzer **720** will take no action including not releasing the packet **704**.

Note that depending upon the implementation of the adapter **720**, the basic operations may be implemented in a different fashion. For example, if the packet analyzer **720** automatically captures every packet **704** which flows through the device **720** to the buffer **714**, then a capture packet operation may not be necessary. However, in this situation, a release packet operation is necessary to actively release unwanted packets **704**. In alternative embodiments, the packet analyzer **720** may implement an in-line filtering function which eliminates the need to capture a given packet **704** to the buffer **714** for initial analysis. In this case, a capture packet action is required to tell the packet analyzer **720** to capture the packet **704** to the buffer **714** for subsequent analysis and processing. Further, then, the packet analyzer **720** does not need to actively release unwanted packets **704**. However, a release packet action is still necessary to release those packets **704** which are captured to the buffer **714**.

As described above, the rules processor **716** may comprises multiple rule sets **726** and rules **732**. Some rule sets **726** and their rules **732** may be defined by the external devices **724** coupled with the edge/packet interception device **720**. For example, one external device **724** may want to intercept DNS packets and will define a rule set **726** to implement that function. Another external device may want to monitor and copy all HTTP requests to a particular IP address and will define a rule set **726** to implement that function. Other rules sets **726** may be standardized and provided as standard functions, such as in a library. Still other rule sets **726** may be defined by an external device **724** but can be entirely processed by the rules processor **716**. These rule sets **726** and rules **732** may be redefined or reset dynamically by the rules processor **716** or the external devices **724**, as needed, to implement their desired functionality. Further, the rule sets **726** and rules **732** may be re-defined or reset via the management interface **722**. Rule sets **726** may also implement security or authentication to prevent one external device **724** from interfering with the operation or security of another external device **724**. The rules processor **716** interfaces with the external devices **724** and the management interface to enable definition and modification/re-definition of rules **732** and rule sets **726** both statically and dynamically.

The external device interface **718** couples the adapter **720** with the external devices **724**. The interface **718** provides the hardware and software connection to pass data back and forth between the packet analyzer **712** and rules processor **716** and the external devices **724**. This data includes commands to the adapter **720**, such as to release a buffered packet **704**, modify a buffered packet **704** or to redefine one or more of the rules **732** or rule sets **726** in the rules processor **716**. In addition, the data includes packets to be delivered to the routing logic **730** of the router **702** for routing onto the network **100**, e.g. a packet to replace the packet in the buffer **714** and then be released to the routing logic **730**. Further the data can include copies of buffered packets **704** from the packet analyzer **712** sent to one or more of the external devices **724** in response to the action of one or more rules **732**. The interface **718** further implements the parallel connection of multiple external devices **724** to the network **100** so that each device **724** does not increase the overall network **100** latency. The interface **718** also implements arbitration schemes so that each external device **724** can implement its particular application in an efficient manner and without interference from the other external devices **724**. In the preferred embodiment, up to eight external devices may be coupled with the adapter **720** via the interface **718**, although alternative embodiments may support fewer or more devices. In one embodiment, all packet processing is handled within the adapter **720** and no external device interface **718** is provided.

Referring now to FIG. **8**, there is shown a more detailed block diagram **800** of the adapter **720** from FIG. **7**. As described above, the adapter **720** is preferably implemented as an adapter card/board/blade which is inserted into a router's **702** backplane interface. Further, the adapter card comprises a management controller **832** and four adapter daughter cards **802**, each daughter card preferably providing two external device **724** interfaces **836**. Further, a bridge device **820** is provided to interface each of the daughter cards **802** with the management controller **832** and a router interface **834** which couples each of the daughter cards **802** with the router **702** backplane.

The management controller **832** preferably comprises an external interface **838** coupled with a processor **842** and memory **840**. The external interface **838** is preferably an 82559 100 megabit Ethernet interface, manufactured by Intel Corporation, located in Santa Clara, Calif. It will be appreciated that other external interface technologies may also be used such as serial, parallel, coaxial and fiber optic based interfaces. The external interface **838** further comprises a VMS747 Security/Cryptographic Processor, manufactured by Philips Semiconductors, Inc., located in the Netherlands for security. The external interface **838** interfaces the management controller **832** with an external management device (not shown) for controlling and managing the adapter **720** via interface **846** which is preferably a 100 megabit Ethernet interface. The external management device is preferably a 808× compatible desktop computer including a Pentium Class processor such as a Pentium III processor manufactured by Intel Corporation in Santa Clara, Calif., 32 megabytes of RAM, 6 gigabytes of hard disk space and an Ethernet interface. It will be appreciated that such desktop computer systems are well known. In alternative embodiments, the external management device can be locally or remotely located with respect to the adapter **720**. The processor **842** is preferably a StrongArm™ control processor manufactured by Intel Corporation located Santa Clara, Calif. The processor **842** is coupled with memory **840** which preferably comprises both 16 megabytes of Synchronous Dynamic Random Access Memory as working storage and 32 megabytes of non-volatile (Flash or Static RAM) storage for firmware and back-up storage. The processor **742** interfaces the management controller **732** with the four daughter cards **802** using a standard Personal Computer Interface ("PCI") compliant bus **844** and bridge logic **820**. Alternatively, the Compact Personal Computer Interface ("CPCI") may be used.

Each daughter card **802** includes a network processor **804**, bulk data storage **806**, an external device **724** interface controller **808**, a memory interface **814**, a classification co-processor **810**, non-volatile storage **812**, and a content addressable memory **816**. The network processor **804** is preferably an IXP1200 Network Processor, manufactured by Intel Corporation, located in Santa Clara, Calif. The network processor **804** includes six micro-engines (not shown) which handle buffering and processing packets as will be described. The network processor **804** is coupled with the PCI bus **830** which interfaces the daughter card **802** with the PCI bridge logic **820** which in turn links all of the daughter cards **802** together and

with the management controller **832**. The network processor is also coupled with the bulk data storage **806**, which is preferably 8 megabytes of Synchronous Dynamic Random Access Memory (SDRAM), via a 64 bit. 83 MHz bi-directional (166 MHz total) SDRAM bus. The bulk data storage **806** is used to store the operating software for the network processor **804**, the buffered packets undergoing processing as well as the rules and rule sets as will be described below.

The network processor **804** is further coupled with the external device **724** interface controller via a 64 bit. 66 MHz bi-directional (132 MHz total) IX bus **826**. The external device **724** interface controller is preferably an IXF1002 Dual Port Gigabit Ethernet MAC, manufactured by Level One™, Inc., located in Sacramento, Calif., a subsidiary of Intel Corp., located in Santa Clara, Calif. The external device **724** interface controller interfaces with the external devices **724** using gigabit optical transceiver interfaces **836**.

In addition, the IX bus **826** also interconnects the four daughter cards **802** with the router backplane (not shown) via the router interface **834**. The interface **834** preferably comprises a Quad IXA field programmable gate array, manufactured by Xilinx located in San Jose, Calif., which controls cross communications between the daughter cards **802** and the traffic gating to the router backplane. Further, the router interface **834** further comprises the router switch fabric interface to interconnect the adapter **720** with the router backplane.

The classification co-processor **810** preferably comprises a ClassiPI™ Classification Co-processor, manufactured by SwitchON Networks, Inc., located in Milpitas, Calif. The non-volatile storage **812** preferably comprises 32 megabytes of Flash memory or Static RAM or other non-volatile storage as is known in the art. The content addressable memory **816** preferably comprises a NetLogic IPCAM® Ternary CAM Ternary Content Addressable Memory, manufactured by NetLogic Microsystems, Inc., located in Mountain View, Calif. The classification co-processor **810**, the non-volatile storage **812** and the content addressable memory **816** are all coupled with the memory interface **814** via memory busses **818**, **820** and **822**. The memory interface **814** is preferably a field programmable gate array device implementing glue logic and clocking signals for the non-volatile memory **812**. The memory interface **814** further couples the classification co-processor **810**, the non-volatile storage **812** and the content addressable memory **816** with the network processor **804** via a 32 bit 83 MHz bi-directional (166 MHz) Static RAM memory bus **824**.

The non-volatile memory **812** is used to store the operating software, including the operating system and custom microcode, for the adapter **800**. Upon boot up of the adapter **800**, this operating code is loaded into the bulk storage memory **806** from which it is executed. The non-volatile memory **812** is further used to store rules **832** and state level information used to restore previous system operation parameters when powering on. The classification co-processor **810** and content addressable memory **816** are used by the network processor **804** to offload specific rule processing tasks when it is more efficient to do so. In particular, processing of rules which involves table look ups or matching values to table entries is best handled by the content addressable memory **816**. Establishing packet type or other classifying operations are best handled by the classification co-processor **810**. As will be described below in more detail, the operating code of the network processor **804** is pre-programmed to cause the network processor **804** to offload certain processing functions to the classification co-processor **810** or the content addressable memory **816** when those devices can perform the particular function more quickly and efficiently than the network processor **804** can. It will be appreciated that other application or function specific processing devices may be included to more efficiently process particular functions of the adapter **800**. Such devices may include: a CryptoSwift™ cryptographic processor, manufactured by Rainbow Technologies Products, Inc. located in Irvine, Calif.; a C-5™ Digital Communications Processor, manufactured by C-Port, Inc., located in North Andover, Mass., a subsidiary of Motorola, Inc., located in Schaumburg, Ill.; a NetLogic Policy Co-Processor™ Packet Classification Engine, manufactured by NetLogic Microsystems, Inc., located in Mountain View, Calif.; a NetLogic CIDR Co-Processor™ Longest Prefix Match Engine, manufactured by NetLogic Microsystems, Inc., located in Mountain View, Calif.; a NetLogic IPCAM® Ternary CAM Ternary Content Addressable Memory, manufactured by NetLogic Microsystems, Inc., located in Mountain View, Calif.; a NetLogic SyncCAM® Binary CAM Binary Content Addressable Memory, manufactured by NetLogic Microsystems, Inc., located in Mountain View, Calif.; or a NetLogic NCAM™ Binary CAM Binary Content Addressable Memory, manufactured by NetLogic Microsystems, Inc., located in Mountain View, Calif.

It will be appreciated that the preferred components are known in the art and that suitable substitutes which implement the same functionality may be used. Further, the disclosed packet interceptor adapter may also be embodied in an alternative physical architecture such as a single board design, or an adapter box external to the router.

Generic operation of the packet interceptor adapter **720** is as follows: A packet is intercepted by the packet analyzer **712/804**. Framers on the router interface **834** capture the packet and forward it to the network processor **804**. Framers are protocol specific devices which understand the network protocol in use, such as Ethernet or Asynchronous Transfer Mode ("ATM"), and which are capable of isolating packets from the raw communications stream and extracting the actual packet contents.

The packet is buffered in buffer **714/806**. The network processor **804** places the intercepted packet into the bulk data storage **806** and creates and stores a packet information block ("PIB") which contains parameters of the packet for efficient reference. These parameters include the source and destination addresses, length and other packet specific data as well as the address within the SDRAM **806** where the packet is buffered/stored. The network processor **804** further creates a pointer to the packet information block in a queue which lists packets ready for further processing. In one embodiment, the network processor **804** includes six micro-engines as described above. Two of these micro-engines are designated masters and the remaining four are designated as slaves. As packets enter the adapter **800**, one of the two master micro-engines, depending upon availability, buffers the packet to the SDRAM **806** and creates the PIB and pointer.

First level rules/sets are executed against the buffered packets. In one embodiment, the slave micro-engines, described above, when idle, continually check the queue of packets ready for further processing. When there is a pointer in the queue of a packet that is ready, the idle slave micro-engine dequeues the pointer entry for the packet and begins processing that packet according to the rules and rule sets programmed into the adapter **800**. In the preferred embodiment, each rule set consist of a hierarchical tree of nodes which are logically linked together, where one or more nodes form a rule. Each tree begins with a root entry node where processing begins. Each node may be one of three types, data gathering, decision or action. Data gathering nodes retrieve

data or other information about the current packet, about the current operating environment or about other packets which may be relevant to the current packet being processed and which have been stored for such reference. Data gathering nodes gather information to be used by decision nodes. Decision nodes perform a function utilizing the data gathered by the data gathering nodes such as a comparison function, an equality function, an inequality function, or some other mathematical and/or Boolean operation. An action node uses the result of the decision node to perform some operation on the packet. In the preferred adapter **800**, the possible actions include releasing the current packet, copying the current packet and sending the copy to an external device via the external device interface **808**, or alternatively, sending the PIB or pointer, deleting the packet or modifying some or all of the packet and releasing it, or combination thereof. Each node specifies another node to which processing should continue when processing of the current node is complete. It will be appreciated that the node and tree structure is a logical data organization which may be implemented as a table of pointers or other construct as is known.

When processing a data gathering, decision or action node, the slave micro-engine may offload the processing to a co-processing element such as the classification co-processor **810** or the content addressable memory **816**. The operating code of the slave micro-engine is pre-programmed to cause the micro-engine offload processing of specific node functions when that processing can be more efficiently completed with the other device. In this case, while the co-processing device is processing the particular node, the slave micro-engine either waits for processing to complete or begins processing another packet. In the latter case, when the co-processing device finishes its processing of the particular node, it can indicate that the packet requires further processing, for example by adding a pointer back to the ready for processing queue, so that a slave micro-engine will finish processing the packet.

Once a slave micro-engine has begun processing a packet, it must determine which rule set to enact upon the packet. In one embodiment, each rule set defines a set of one or more packet parameters which indicate to the slave micro-engine that the rule set is to be applied to the current packet. The slave micro-engine references the packet information block using the pointer to determine that the one or more packet parameters meet the rule set requirements. If so, then the slave micro-engine executes that rule set starting with the root node in the tree. If a particular packet triggers application of more than one rule set, the slave micro-engine processes the rule sets in a prioritized order. Alternatively, other execution schemes may be used such as round robin. In one embodiment, the slave micro-engine determines which rule set to execute based upon packet type, wherein only a single rule set is stored for each type of packet that may be intercepted. For example, FTP packets may trigger application of one rule set while HTTP packets may trigger application of a second rule set.

Each rule set/tree of nodes then consists of a set of data gathering, decision and action nodes which process the packet and take a particular course of action. In one embodiment, each rule set is constructed so as to make a quick initial determination on whether to hold or release the packet from the buffer. In this way, processing latency is reduced. Once the particular course of action has been taken with the packet, the slave micro-engine other rule sets, if any, on that packet or returns to polling the queue of packets ready for processing to pick up another packet for processing.

When an action node results in sending a copy of a packet out to an external device, no further action is taken on that packet until a response is received from the external device. In one embodiment, the slave micro-engine waits for a response from that external device before continuing processing. In an alternate embodiment, the slave micro-engine processes other packets while waiting. The response from the external device instructs the slave micro-engine on what further actions to take with the packet. Such further action includes deleting the packet, releasing the packet, or modifying the packet, or combinations thereof. In one embodiment, the external device may provide a substitute packet for the buffered packet to release, with the buffered packet being deleted. This substitute packet may be provided directly to the buffer **806** to overwrite the buffered packet. In yet another alternative embodiment, once the copy of the packet, the PIB or the pointer has been sent to the external device, the slave micro-engine is free to begin processing another packet. The external device then signals that it has completed its processing, such as by writing a packet pointer to the queue of packets ready for processing or some other flag indicating the further processing can take place on the buffered packet to complete the processing thereof.

Where a particular packet fails to trigger the application of any of the rule sets, default rules or actions may be provided for processing the packet, as discussed above. In the preferred embodiment, the default rule/action consists only of the action of releasing the packet. In this way, packets which are not of interest are immediately released for normal routing.

In addition, the adapter **800** may receive commands from either one more of the external devices **836**, or the management interface **832**. In one embodiment, the adapter **800** authenticates any commands received to ensure they are from valid sources. Such commands include commands for adding, modifying or deleting a rule set, commands for providing an externally generated packet for release, or commands to delete, modify or release a packet currently in the buffer.

The specific operation of the packet interceptor adapter **720** executing denial of service protection application for malformed Internet Control Message Protocol ("ICMP") packets is as follows: Framers on the router interface **834** captures a packet and forwards to network processor **804**. An idle master micro-engine on the Network processor **804** stores packet in buffer/SDRAM **806** and creates PIB and pointer. The pointer put on the queue of packets ready for processing. An idle slave micro-engine checks the queue for packets to be processes and dequeues the packet pointer. The slave micro-engine executes a default application specific rule set. The first rule in the set checks the source IP address of the packet against a list of blocked IP addresses. This processing takes place in the content addressable memory **816** which is more efficient at processing this type of look-up function.

If the source IP address matches a blocked IP address stored in the content addressable memory **816**, the slave micro-engine deletes the packet from the buffer and processing ends for this packet. If the source IP address does not match a blocked IP address, the slave micro-engine determines the packet type by analyzing the packet header. If this packet is not an ICMP packet, the packet is released.

If the packet is an ICMP packet, the packet is sent to the classification co-processor **810** to check for proper packet construction. The classification co-processor **810** compares the construction of the buffered packet against a reference stored in the non-volatile memory **812**.

If the packet is determined to be malformed, the slave micro-engine is instructed to delete the packet and processing

ends for this packet. In one embodiment, the IP address of malformed packet is added to a block list. In an alternate embodiment, the IP address is added to the block list only after the number of malformed packets received from this IP address exceeds a particular threshold. In still another embodiment, the receipt of one or more malformed packets raises an alert to a user for manual intervention to add the source IP address to the block list.

It will be appreciated that any device which intercepts and processes packets can utilize the packet interceptor adapter **720**. For example, devices which utilize the transport layer or layer 4 data to route packets to their destination or redirect them to alternate destinations are known. These devices attempt to learn the type of application data being carried by the packet based on the transport layer port address. As described above, well know applications utilize "well known ports." For example, HTTP data uses port **80**, Telnet use port **23**, FTP uses port **21** and domain name server requests use port **53**. This information can be used to redirect a particular packet to a server which can more optimally handle the packet. Utilizing the packet interceptor adapter **720**, such devices could define a rule to have the adapter intercept packets destined for a particular port number of a particular IP address. For those packets which are intercepted, the action taken could be to modify the destination IP address to an alternate destination and release the packet. This functionality could be completely implemented on the adapter **720** itself or the adapter **720** could forward copies of intercepted packets out to an external device which dynamically determines the modified IP destination address.

Another exemplary application of the packet interceptor adapter **720** is as web switch. A web switch is used to balance the load across multiple mirror servers at a particular web site. The adapter **720** is programmed with a rule to intercept packets directed to transport layer port **80** of the particular web site (based on the IP address). Knowing that these packets contain HTTP requests, the adapter can re-route the packet from an overloaded server to a server which has excess capacity, thereby balancing the load distribution. Again, this functionality can be implemented directly on the adapter **720** or in combination with an external device **724** which is monitoring and controlling the load distribution across the servers.

In one alternative embodiment, the adapter **800** provides no external interface **836** for external devices. In this embodiment, the adapter **800** intercepts packets and executes rule sets as described above. The rule sets may be developed and provided by third party developers for particular applications. The adapter then comprises a generic packet interceptor and processor.

In still another alternative embodiment, the adapter is configured as an application specific device with a defined rule set for implementing a specific application or set of applications. For example, the adapter is specifically configured to act as an anti-denial of service security device.

IX. The Fifth Embodiment

Meeting the universal demand for an Internet that is more robust, that is capable of sustaining its own growth and that can adapt to new technologies, requires the migration of the current network infrastructure to next generation networking technologies. This next generation data network is often referred to as the "Optical Internet."

The shift to the Optical Internet has created a new set of challenges. Chief among these challenges is the need to manage an exponentially higher volume of network traffic at much higher rates of speed. In the U.S., the principal standard for optical networks is the American National Standards Institute ("ANSI") standard for synchronous data transmission over optical media known as Synchronous Optical Network ("SONET"). The SONET standard actually comprises multiple standards for transmission rates up to 9.953 gigabits per second ("Gbps") with the capability to go up to 20 Gbps. Each transmission rate standard is known as an Optical Carrier Level ("OC-X"). Exemplary optical carrier levels include OC-12 for communications at 622.08 Mbps, OC-48 for communications at 2.488 Gbps and OC-192 for communications at 10 Gbps. Today's microprocessors face a situation where they cannot support the pace of performance increases associated with the deployment of fiber-based network bandwidth of OC-48 and higher. Simply put, the move to fiber-optic networks has pushed the physical limits of microprocessors and the I/O bus beyond their current technical capabilities. The platform described herein is designed to address many issues associated with Optical Internet services that cannot be addressed by the current software based firewall servers.

FIG. **9** shows an exemplary device **900** for intercepting and processing packets at wire speed from an optical based network **100**, such as the Internet, compatible with the OC-48 standard or faster. For a more detailed explanation of the operation of devices which intercept and process packets, refer to U.S. patent application Serial entitled "EDGE ADAPTER ARCHITECTURE APPARATUS AND METHOD", which is captioned above. The exemplary device **900** may include the Rapid Intelligent Processing Platform manufactured by Cloudshield Technologies, Inc., located in San Jose, Calif. For clarity, some components of the device **900** are not shown.

The device **900** shown in FIG. **9** is coupled with the network **100** (consisting of an upstream network portion **100**A and a downstream network portion **100**B) via a network connection **910** so as to be able to intercept and process packets communicated between the upstream network portion **100**A and the downstream network portion **100**B of the network **100**. Herein, the phrase "coupled with" is defined to mean directly connected to or indirectly connected through one or more intermediate components. Such intermediate components may include both hardware and software based components. In one embodiment, the network connection **910** is an optical network connection. In an alternate embodiment, the network connection **910** is an electrical network connection.

In one embodiment, not shown in the figure, the device **900** is configured as a rack-mount system comprising a chassis which provides power, cooling and a housing for the other components, as described below. The housing further includes a backplane into which the other components plug into and which interconnects those components. Such components may include interface components to couple external devices to add additional processing functionality.

The device **900** includes two primary processing elements **904**A, **904**B which intercept and process packets from the network **100**. One primary processing element **904**A is coupled with the upstream network **100**A and the other primary processing element **904**B is coupled with the downstream portion of the network **100**B via the network interface **920**. It will be appreciated that additional primary processing elements **904**A, **904**B may be provided depending on the topology, physical and logical arrangement of the network **100** and the coupling point of the device **900**. Further, the functionality of the processing elements **904**A, **904**B may be consolidated into a single processing element. In one embodiment, each primary processing element **904**A, **904**B includes a printed circuit board capable of being plugged into the backplane described above. For more detail on the operation

of the primary processing elements, refer to U.S. patent application entitled "APPARATUS AND METHOD FOR INTERCONNECTING A PROCESSOR TO CO-PROCESSORS USING SHARED MEMORY", captioned above.

The primary function of the primary processing elements **904**A, **904**B is to perform stateless processing tasks on the incoming packet stream. Stateless processing tasks are tasks that do not require knowledge of what has come before in the packet stream. Stateless tasks include ingress and egress filtering. Ingress and egress filtering involves ensuring that packets arriving from a particular portion of the network actually came from that portion of the network, as was described above. For example, where the device **900** is programmed with the range of network addresses in the portion of the network **100**B downstream of the device **900**, packets arriving from that downstream portion with a network address out of range would be detected as invalid and filtered out of the packet stream, or vice versa for the upstream portion of the network **100**A. Egress filtering refers to filtering in the upstream to downstream direction and ingress filtering refers to filtering in the downstream to upstream direction. For the filtering function, the filter values are typically maintained in block lists. Note that while filtering is a stateless function, independent of what packets have come before, the device **900** interjects stateful processing, as described below, to dynamically update the filtering or other information required for the stateless processing tasks. While the network processor **906**A, **906**B on the primary processing elements **904**A, **904**B can store state information about historical packet activity, each processing element **904**A, **904**B only sees one direction of the packet flow off the network **100**. Therefore, they cannot perform true stateful processing tasks which requires bi-directional visibility. This functionality is provided by the secondary processing elements **912**A, **912**B, described in more detail below.

The device **900** further includes two secondary processing elements **912**A, **912**B which are coupled with the primary processing elements **904**A, **904**B via a command/control bus **924** and packet busses **926**A, **926**B, **926**C, **926**D. In one embodiment, each secondary processing element **912**A, **912**B is a printed circuit board capable of being plugged into the backplane described above. Additional secondary processing elements **912**A, **912**B may be included or the functionality of the secondary processing elements **912**A, **912**B may be consolidated into a single secondary processing element. In one embodiment, the command/control bus **924** is a bus routed over the interconnecting backplane of device **900** and complying with the Compact Personal Computer Interface ("cPCI") standard and is 64 bits wide and operates at a frequency of at least 33 MHz. Exemplary packet busses **926**A, **926**B, **926**C, **926**D include busses complying with the IX bus protocol of the Intel IXP1200 Network Processing Unit and are described in more detail below. Each exemplary packet bus **926**A, **926**B, **926**C, **926**D may be bi-directional, 64 bits wide and operate at a frequency of at least 84 MHz and may be routed over the backplane described above. Alternatively, other bus technologies/protocols may be used and are dependent upon the implementation of the device **900**. The command/control bus **924** carries command and control information between the primary and secondary processing elements **904**A, **904**B, **912**A, **912**B. The packet busses **926**A, **926**B, **926**C, **926**D carry packet data between the primary and secondary processing elements **904**A, **904**B, **912**A, **912**B. For more detail on the operation of the secondary processing elements, refer to U.S. patent application entitled "APPARATUS AND METHOD FOR INTERFACING WITH A HIGH SPEED BI-DIRECTIONAL NETWORK", captioned above.

The primary function of the secondary processing elements **912**A, **912**B is to perform stateful processing tasks, i.e. tasks which are dependent on historical activity. One example of a stateful processing task involves network security applications which require monitoring conversations, i.e. bi-directional packet flow, in the packet stream, typically consisting of requests and responses to those requests. Stateful processing and the ability to monitor traffic bi-directionally allows the secondary processing elements watch for requests and responses and match them up. The arrangement of the inbound network processors **906**C of the secondary processing elements **912**A, **912**B, described in more detail below, allows them to share information about packets coming from either direction, i.e. upstream or downstream. Further, the secondary processing elements **912**A, **912**B can affect the stateless processing of the primary processing elements **904**A, **904**B. For example, where the secondary processing elements **912**A, **912**B determine that packets from a certain network address are consistently invalid, the secondary processing elements **912**A, **912**B can add that network address to the filtering list of the primary processing elements **904**A, **904**B thereby dynamically updating the stateless processing environment.

For example, packets such as those traversing between a web browser and web server change port numbers once a session between the two entities is created. A stateless rule cannot be applied that says "don't allow HTTP POST commands from network address ABC" without destroying all communications from the network address ABC. To accomplish the desired filtering and not destroy all communications from the source network address, the device **900** watches for new sessions directed to the web server on port **80** (standard HTTP application port). By watching the traffic, an example session might choose to then communicate on port **23899** at the web server. Only by subsequently watching traffic destined to this new port would the device **900** be able to search for HTTP POST commands that need to be blocked. Once identified, the packets could then be dealt with. If the session startup was not monitored and information not stored for future reference, i.e. not storing state information, an HTTP POST command traversing the network as part of a text stream from a different application, such as a document about how to configure a blocking system, might be falsely identified. Stateful inspection generally requires visibility to traffic in both directions. In the case above, a packet from the client to the server would have shown the request for a new web session. The response from the server to the client would have shown the web server port number to monitor. In firewalls it is also this response that subsequently allows that port number to have future traffic allowed through the firewall. This second port number on the server is the one for which traffic can be subsequently monitored for the HTTP POST. By storing relevant information for future packet processing analysis, the device **900** is made stateful.

In addition, the device **900** includes a management adapter **914** which is coupled with the command/control bus **924**. The management adapter **914** is used to manage the device **900** and control the functionality of the primary and secondary processing elements **904**A, **904**B, **912**A, **912**B. In one embodiment, the management adapter **914** includes a computer server having dual-Pentium III processors manufactured by Intel Corporation, located in Santa Clara, Calif., or suitable alternatives. The management adapter **914** further includes at least 64 MB of RAM and at least 10 GB of hard disk storage. The management adapter **914** is preferably implemented as a single board computer that plugs into the back plane, as described above, although more than one board

as well as a stand alone personal computer may also be used. The management adapter **914** further includes an external management interface (not shown) which allows the connection of an external management device (not shown) for programming, controlling and maintaining the device **900**. In one embodiment, the external management interface includes a model 82550 100 megabit Ethernet Interface manufactured by Intel Corporation, located in Santa Clara, Calif. Other interfaces, such as serial, parallel, coaxial and optical based interfaces may also be used. In one embodiment, the external management device is a desktop computer such as the Deskpro Model ENS SFF P733 manufactured by Compaq Computer Corporation, located in Houston, Tex. Alternatively, any suitable Pentiumm class computer having suitable memory and hard disk space in addition to Ethernet or other form of network connectivity, may be used. Further, the external management device may be located locally with respect to the device **900** or remotely and connected to the device **900** via a local or wide area network.

The primary processing elements **904**A, **904**B are preferably capable of operating in parallel. The two primary processing elements **904**A, **904**B, are also referred to as Media Adapter Cards ("MAC") or Media Blade Adapters ("MBA"). Each primary processing element **904**A, **904**B includes a network interface **920**, two network processors **906**A, **906**B, a set **922**A, **922**B of one or more co-processors **908**, a packet bus interface **928**A, **928**B, and a command/control bus interface **916**. The network interface **920** is coupled with the network **100** via the network connection **910**. In one embodiment, the network connection **910** is an optical network connection operating at a throughput of approximately 2.5 Gbps and a 1, 4 or 16 bit width. Each network processor **906**A, **906**B is coupled with the network interface **920**, in a parallel configuration, to receive packets from the network **100**. The network interface converts the protocol, bus width and frequency of the network connection **910** to the protocol, bus width and frequency of the network processors **906**A, **906**B. Further, the network interface **920** splits the incoming data stream between the network processors **906**A, **906**B, as described below. It will be appreciated that the disclosed embodiments can support any number of network processors **906**A, **906**B operating in parallel as described below, as the application demands. Further, each secondary processing element **912**A, **912**B is also coupled with network interface **920** of one of the primary processing elements **904**A, **904**B via packet busses **126**C, **126**D to transmit packets onto the network **100**, described in more detail below. The network interface **920** converts the protocol, frequency and bus width of the packet busses **126**C, **126**D from the secondary processing elements to the protocol, frequency and bus width of the network connection **910**. In addition, each network processor **906**A, **906**B is coupled with a set **922**A, **922**B of one or more co-processors **908** which is described in more detail below. Further, each network processor **906**A, **906**B is coupled with the command/control bus **924** via command/control interface busses **930**A, **930**B and the command/control bus interface **916**. In one embodiment, the command/control interface busses **930**A, **930**B are compliant with the Personal Computer Interface ("PCI") standard and are 32 bits wide and operate at a frequency of at least 33 MHz. Further, the command/control bus interface **916** is a PCI to cPCI bus bridge for interfacing the busses **930**A, **930**B with the command/control cPCI bus **924**, described above. Both network processors **906**A, **906**B are also coupled with one of the secondary processing elements **912**A, **912**B via the packet bus interface **928**A, **928**B and the packet bus **926**A, **926**B.

Each secondary processing element **912**A, **912**B also includes two network processors **906**C, **906**D, in a serial configuration, and a command/control bus interface **916**. It will be appreciated that the disclosed embodiments can support any number of network processors **906**A, **906**B operating serially as described below, as the application demands. Each of the network processors **906**C, **906**D is coupled with the command/control bus **924** via the command/control interface busses **930**C, **930**D and the command/control bus interface **916**. In one embodiment, the command/control interfaces are at least 33 MHz 32 bit PCI compliant as described above and the command/control bus interface **916** is a PCI-to-cPCI bus bridge as described above. One of the network processors **906**C is coupled with both network processors **906**A, **906**B of one of the primary processing elements **904**A, **904**B via the packet bus **926**A, **926**C and packet bus interface **928**A, **928**B for receiving packet data from the primary processing elements **904**A, **904**B. The other of the network processors **906**D is coupled with the network interface **920** of the other of the primary processing elements **904**A, **904**B via the packet bus **926**B, **926**D for sending packet data to the network **100**, as described above. The secondary processing elements **912**A, **912**B are also referred to as Intelligent Packet Adapters ("IPA").

Each secondary processing element **912**A, **912**B further includes a shared synchronous dynamic RAM ("SDRAM") memory fabric **918** coupled between each of the network processors **906**C, **906**D to allow the network processors **906**C, **906**D to operate uni-directionally and move data from the inbound network processor **906**C to the outbound network processor **906**D. For more detail on the operation of this memory fabric **918**, refer to U.S. patent application entitled "APPARATUS AND METHOD FOR INTERFACING WITH A HIGH SPEED BI-DIRECTIONAL NETWORK", captioned above.

In addition, one of the network processors **906**C, from each secondary processing element **912**A, **912**B is coupled with a set **922**C of co-processors **908**. It will be appreciated that the description below relating to the sharing of co-processors **908** sets **922**A, **922**B between the two network processors **906**A, **906**B of the primary processing element **904**A, **904**B are applicable to the arrangement of the co-processors **908** and the secondary processing elements **912**A, **912**B. In one embodiment of the secondary processing elements **912**A, **912**B, the network processors **906**C which are sharing the co-processors **908** of set **922**C are located on two different circuit boards (one for each element **912**A, **912**B) which share a common daughter card containing the set **922**C of co-processors **908**.

Each network processor **906**C, **906**D handles one direction of the bi-directional packet flow coming to/from the secondary processing elements **912**A, **912**B. In particular, the inbound network processor **906**C handles traffic incoming to the secondary processing element **912**A, **912**B and performs inspection and analysis tasks. The outbound network processor **906**D handles outgoing traffic from the secondary processing element **912**A, **912**B and performing actions on the packet such as modification, cleansing/deletion or insertion of new or replacement packets. By serializing the network processors **906**C, **906**D on the secondary processing elements **912**A, **912**B, the processing of packets can be divided into steps and distributed between the two network processors **906**C, **906**D. It will be appreciated more network processors **906**C, **906**D may be coupled serially to enhance the ability to sub-divide the processing task, lowering the burden on any one network processor **906**C, **906**D only at the cost of the latency added to the packet stream by the additional network

processors **906**C, **906**D and the additional hardware cost. The network processors **906**C, **906**D intercommunicate and share data via an SDRAM memory fabric to implement this serial packet flow. For more detailed information, refer to U.S. patent application entitled "APPARATUS AND METHOD FOR INTERFACING WITH A HIGH SPEED BI-DIRECTIONAL NETWORK", captioned above. Further each secondary processing element **912**A, **912**B handles a different direction of packet flow from the network **100**. In particular, the upstream secondary processing element **912**A handles packets flowing from the network **100**A upstream of the device **900** to the network **100**B downstream of the device **900**. The downstream secondary processing element **912**B handles packets flowing from the network **100**B downstream of the device **900** to the network **100**A upstream of the device **900**. For a more detailed description, please refer to U.S. patent application entitled "APPARATUS AND METHOD FOR INTERFACING WITH A HIGH SPEED BI-DIRECTIONAL NETWORK", captioned above.

The device **900** intercepts and processes packets from the network **100**. One "upstream" primary processing element **904**A intercepts packets arriving from the network **100**A upstream of the device **900** and the other "downstream" primary processing element **904**B intercepts packets arriving from the network **100**B downstream of the device **900**. The intercepted packets are pre-processed, as described above, and then passed on to a corresponding secondary processing element **912**A, **912**B for subsequent processing and possible release back to the network **100**. Further, within each primary processing element **904**A, **904**B, the network interface **920** converts the protocol, frequency and bus width of the network connection **910** to the protocol, frequency an bus width of the network processors **906**A, **906**B and splits the incoming packet stream among the two network processors **906**A, **906**B which process packets in parallel (explained in more detail below). In one embodiment, the packet stream is alternated between the network processors **906**A, **906**B in a "ping-pong" fashion, i.e. a first packet going to one network processor **906**A, **906**B, the second packet going to the other network processor **906**A, **906**B and the next packet going back to the first network processor **906**A, **906**B, and so on. For more detail on this parallel packet processing architecture, refer to U.S. patent application entitled "EDGE ADAPTER ARCHITECTURE APPARATUS AND METHOD", captioned above. The network processors **906**A, **906**B are further coupled with the packet bus interface **928**A, **928**B which couples both network processors **906**A, **906**B with the common packet bus **926**A, **926**C to the secondary processing elements **912**A, **912**B. The packet bus interface **928**A, **928**B converts the bus width of the packet processors **906**A, **906**B to the bus width of the packet bus **926**A, **926**C. For more information about the packet bus interface **928**A, **928**B, refer to U.S. patent application entitled "APPARATUS AND METHOD FOR INTERCONNECTING A PROCESSOR TO CO-PROCESSORS USING SHARED MEMORY", captioned above.

For example, a packet traveling from the network **100**A upstream of the device **900** to the network **100**B downstream of the device **900** is intercepted by the network interface **920** of the upstream primary processing element **904**A. The network interface **920** passes the intercepted packet to one of the network processors **906**A, **906**B which preliminarily process the packet as described above. This may involve the shared co-processors **908**, as described below. The packet is then transmitted to the inbound network processor **906**C of the upstream secondary processing element **912**A for subsequent processing via the packet bus interface **928**A and the packet bus **926**A. Within the upstream secondary processing element **912**A, the packet is processed and moved from the inbound network processor **906**C to the outbound network processor **906**D via the SDRAM memory fabric **918**. This processing may involve processing by the shared co-processors **922**. If it is determined that the packet is to be released, in original or modified form, the outbound network processor **906**D sends the packet to the network interface **920** of the downstream primary processing element **904**B via the packet bus **926**B. The network interface **920** of the downstream primary processing element **904**B then transmits the packet back onto the network **100**B.

For packets traveling from the network **100**B downstream of the device **900** to the network **100**A upstream of the device **900**, the packets are intercepted by the network interface **920** of the downstream primary processing element **904**B. The network interface **920** passes the intercepted packet to one of the network processors **906**A, **906**B which preliminarily process the packet as described above. This may involve the shared co-processors **908**, as described below. The packet is then transmitted to the inbound network processor **906**C of the downstream secondary processing element **912**B for subsequent processing via the packet bus interface **928**B and packet bus **926**C. Within the downstream secondary processing element **912**B, the packet is processed and moved from the inbound network processor **906**C to the outbound network processor **906**D via the SDRAM memory fabric **918**. This processing may involve processing by the shared co-processors **922**. If it is determined that the packet is to be released, in original or modified form, the outbound network processor **906**D sends the packet to the network interface **920** of the upstream primary processing element **904**A via the packet bus **926**D. The network interface **920** of the upstream primary processing element **904**A then transmits the packet back onto the network **100**A.

Overall, the device **900** intercepts packets flowing in an up or downstream direction, processes them and determines a course of action based on the application that the device **900** is implementing. Such actions include, for example, releasing the packet to the network **100**, modifying the packet and releasing it to the network **100**, deleting the packet, substituting a different packet for the intercepted packet, forwarding the packet to additional internal or external processing resources (not shown), logging/storing information about the packet, or combinations thereof. Applications include content delivery application or security applications such as for preventing unauthorized network access or preventing denial of service attacks.

The network processor **906**A, **906**B, **906**C, **906**D used in the primary and secondary processing elements **904**A, **904**B, **912**A, **912**B is preferably a general purpose network processor which is suitable for a wide variety of network applications. In one embodiment, each primary and secondary processing element **904**A, **904**B, **912**A, **912**B includes two network processors **906**A, **906**B, **906**C, **906**D and supporting hardware (not shown), as described above. An exemplary network processor **906**A, **906**B, **906**C, **906**D is the Intel IXP1200 Network Processor Unit, manufactured by Intel Corporation, located in Santa Clara, Calif. For more detailed information about the exemplary processor **906**, please refer to Intel® IXP1200 Network Processor Datasheet part no. 278298-007 published by Intel Corporation, located in Santa Clara, Calif. This exemplary network processor **906**A, **906**B provides six micro-engines/path-processors for performing processing tasks as well as a StrongARM™ control processor. Each of the network processors **906**A, **906**B, **906**C, **906**D preferably operates a frequency of 233 MHz or faster,

although slower clock speeds may be used. It will be appreciated that other network specific or general purpose processors may be used.

As with most general purpose processors, the network processor **906**A, **906**B, **906**C, **906**D is capable of being programmed to perform a wide variety of tasks. Unfortunately, this adaptability typically comes at the price of performance at any one given task. Therefore, to assist with the processing of packets, each network processor **906**A, **906**B on the primary processing element **904**A, **904**B and the inbound network processor **906**C on the secondary processing element **912**A, **912**B is coupled with one or more co-processor **908** sets **922**A, **922**B, **922**C. The co-processors **908** on each set **922**A, **922**B, **922**C may be specialized processors which perform a more limited set of tasks, but perform them faster and more efficiently than the network processor **906**A, **906**B, **906**C is capable of. In one embodiment, the co-processors **908** include one or more classification co-processors and one or more content addressable memories ("CAM").

The classification co-processors **908** are used to accelerate certain search and extraction rules for the network processor **906**A, **906**B, **906**C. In one embodiment of device **900**, the co-processor **908** set **922**A, **922**B of each primary processing element **904**A, **904**B includes two classification co-processors **908**. The shared co-processor **908** set **922**C also includes two classification co-processors shared by the secondary processing elements **912**A, **912**B. An exemplary classification co-processor is the PM2329 ClassiPI Network Classification Processor manufactured PMC-Sierra, Inc., located in Burnaby, BC Canada. This co-processor is capable of operating at a frequency of at least 100 MHz.

The CAM co-processors **908** are used to facilitate certain search and compare operations that would otherwise be computationally intensive and degrade the performance of the network processor **906**A, **906**B, **906**C. It is preferable that the CAM co-processors **108** be capable of being cascaded together, from 2 to 8, or more devices, to increase the search range. It is further preferable that the CAM co-processors **108** have the capability of processing at least 100 million compares per second. In such a design, each CAM data bit has an associated local mask bit that is used during the compare operation. In contrast with global mask bits, the local mask bits are used only with the associated bit and only for compare operations. This provides masking on an individual bit basis for ternary operation. In one embodiment of the device **900**, the co-processor **908** set **922**A, **922**B of each primary processing element **904**A, **904**B includes eight CAM co-processors **908**. The shared co-processor **908** set **922**C also includes eight CAM co-processors **908** shared by the secondary processing elements **912**A, **912**B. An exemplary CAM is the NetLogic NSE3128 Network Search Engine, formerly named IPCAM®-**3**, manufactured by NetLogic Microsystems, Inc., located in New York City, N.Y. For more detailed information about the exemplary CAM, refer to NSE3128 Network Search Engine product brief available at the web site netlogic.com/html/datasheets/nse3128.html, last accessed May 11, 2001.

An exemplary CAM device may have at least the following features:

- Organization options of any single device in cascade: 64K×72, 32K×144 or 16K×288;
- Local mask bit associated with each CAM;
- Clock rates: 50/66/100 MHz for 1 megabit devices or up to 200 MHz for a 9 megabit device;
- Eight global mask registers;
- 16 bit instruction bus;
- 32 bit result bus;
- 36/72 bit comparand bi-directional bus or 72/144 bit comparand bus for a 9 megabit device;
- flags to indicate Match ("/M"), Multiple Match ("/MM") and Full Flag ("/FF"); and
- 24 bit Next Free Address ("NFA") bus.

It will be appreciated that other classification processors and CAM's may be used and that additional task specific co-processors may also be used, such as cryptographic co-processors, to enhance the processing capability of the primary or secondary processing elements **904**A, **904**B, **912**A, **912**B.

As was discussed, the device **900** has to be able to operate at wire speed or faster so as not to degrade network throughput. In the case of an OC-48 class network, this means handling communications speeds of nearly 2.5 Gbps in both directions through the device **900** simultaneously to achieve full duplex functionality, for a total of nearly 5 Gbps throughput for the device **900**. Ideally, to achieve this goal, the co-processors **908** should be directly connected to the network processors **906**A, **906**B, **906**C. This would achieve the highest bandwidth of data exchange between these devices, maximizing their utilization and efficiency. Unfortunately, physical, electrical and device design limitations make this direct connection difficult to achieve.

With regard to the primary processing elements **904**A, **904**B, the physical limitations primarily include the limited amount of space/area available on a single circuit board. It is difficult and expensive to implement two network processors **906**A, **906**B, their supporting hardware and up to ten co-processors **908**, or more, as well as all of the routing interconnections on a single circuit board. An alternative is to move some of the devices to daughter card circuit boards which plug into a main circuit board. This would increase the available area for part placement but introduces electrical concerns regarding the interfaces between the devices. In particular, a daughter card arrangement introduces a board-to-board connector between the daughter card and the main circuit board. This connector introduces undesirable electrical characteristics into the interface between devices mounted on the daughter card and devices mounted on the main circuit board. These undesirable characteristics include increased noise, lower limits on operating frequency, increased parasitic capacitance, increased resistance and increased inductance. These characteristics limit the speed with which these devices can communicate. In order to properly interface across the connector, careful modeling is required to predict the electrical behavior of the connector and how it will impact the interface.

Further, complexities related to interfacing the network processors **906**A, **906**B to the co-processors **908** also complicate the design and implementation of the device **900**. In particular, both the network processor **906**A, **906**B and the co-processors **908** provide input/output busses for the purpose of interconnecting that device with other devices. However, the network processor **906**A, **906**B as well as the different types of co-processors **908**, all have different interface requirements, such as different supported clock frequencies, bus widths and communications protocols. In addition, the interfaces are further complicated by the desire to connect more than one of each type of co-processor **908** with the network processor **906**A, **906**B. Even further complicating the interface requirements is the desire to allow each network processor **906**A, **906**B on the processing element **904** to share the same co-processors **908** and allow each inbound network processor **906**C to share the same co-processor **908** set **922**C. Sharing co-processor **908** sets **922**A, **922**B, **922**C allows the network processors **906**A, **906**B, **906**C to interoperate and

share data, such as state information, in addition to saving costs by reducing the number of devices on the primary processing elements **904**A, **904**B. When one network processor **906**A, **906**B, **906**C decides to store state information, that information is made available to the other network processor **906**A, **906**B, **906**C. Further, when global updates to the data stored within the co-processors **908** are needed, such as updates to the CAM tables, these updates can be performed more efficiently since there are fewer co-processor sets **922**A, **922**B, **922**C to update. For example, when the secondary processing elements **912**A, **912**B, due to the result of some stateful processing task, need to update the state information in the CAM data, such as the filtering block lists, the updates need to go to fewer devices resulting in a faster and more efficient distribution of those updates. Further, the sharing of state information among the network processors **906**A, **906**B on the primary processing elements **904**A, **904**B, allows the network processors **906**A, **906**B to operate in parallel and thereby reduces the traffic flow to each network processor **906**A, **906**B, achieving a longer number of clock cycles over which a packet may be processed.

For more detail on the operation of this co-processor **90** sharing and the interface between the primary and secondary network elements **904**A, **904**B, **912**A, **912**B and the co-processor sets **922**A, **922**B, **922**C, refer to U.S. patent application entitled "APPARATUS AND METHOD FOR INTERCONNECTING A PROCESSOR TO CO-PROCESSORS USING SHARED MEMORY", captioned above.

In addition, the architecture of the device **900** allows for efficient processing of any portion of the packet regardless of whether it is in the header or payload. This allows for more flexible packet analysis which can adapt to changing network protocols. For example, packet changes such as Multi-protocol Label Switching ("MPLS") have made even the normal IP header look different in a packet since it is now preceded by the MPLS tag. Similarly, new network application are constantly being developed may have their own format and header/payload structure. The disclosed architecture does not treat the header any different from payload in its ability to analyze a given packet. This allows for maximum adaptability to evolving network technologies.

As can be see, the above description discloses a unique architecture capable of bridging the technology gap between existing network processing technology and next generation networking technology. The architecture of the device **900** leverages parallel processing for stateless tasks and serialized/staged processing for stateful tasks. It will be appreciated that the ability to process data statefully requires bidirectional visibility over the traffic stream of the network **102** and further requires deployment of the device **900** at a point, i.e. a choke point, within the network **102** where all traffic of interest is visible and through which it must flow. Alternatively, the device **900** can provide partial stateful and stateless operation in situations where complete bi-directional visibility cannot be guaranteed or is not available.

For stateless processing tasks, such as filtering, pre-processing and other tasks not requiring knowledge of historical packet activity or matching of bi-directional packet activity, multiple parallel network processors **906**A, **906**B are provided for each network **102**A, **102**B direction of the bi-directional traffic stream. The incoming packets are equally distributed among the parallel network processors **906**A, **906**B, which reduces the load on any one processor. As described above, the primary processing elements **904**A, **904**B provide two network processors **906**A, **906**B each, operating parallel. Further, the architecture is scalable, allowing for additional parallel network processors **906**A, **906**B to be added to provide additional processing capability, with only the cost of the additional hardware required. The architecture of the device **900** further allows for the parallel network processors **906**A, **906**B to share a common set **922**A, **922**B of co-processors **108**. In addition to hardware savings, this configuration permits the processors **906**A, **906**B to share state information among themselves, further increasing efficiency of operation.

Where a particular application requires stateful processing tasks, such as a security application that needs to monitor bi-directional and/or historical packet activity, the architecture of the device **900** further provides serialized/staged processors for each direction of the packet flow. These serialized/staged processors divide up the required processing tasks, thereby reducing the load on any one processor. For each direction, a the packet data flows through an inbound processor **906**C dedicated to receiving inbound traffic and performing inspection, analysis and other preliminary tasks. The inbound processor then passes the packet data to an outbound processor via a memory fabric, described above. The outbound processor then completes the processing, such as by modifying, deleting, or releasing the packet modified or unmodified and or logging/storing information about the packet for subsequent processing. It will be appreciated that the architecture is scalable and that additional network processors **906**C, **906**D may be added to further divide up the processing burden, reducing the load on individual network processors **906**C, **906**D. Additional network processors **906**C, **906**D may be connected using the described memory fabric or by coupling multiple secondary processing elements **912**A, **912**B in series via the IX bus and backplane described above. Further, the inbound processors of each direction of packet flow are coupled together via a common set **922**C of co-processors similar to the parallel configured processors **906**A, **906**B. In addition to the hardware savings, this configuration permits the efficient sharing of bi-directional packet activity, thereby providing complete stateful processing capability of the bi-directional packet flow. Further, the network processors **906**C, **906**D performing the stateful processing can dynamically update state information to the stateless network processors **906**A, **906**B, thereby providing dynamic accommodation to changing network conditions.

The architecture of the device **900** bridges the network and packet processing technology gap by distributing the processing tasks and reducing the load and utilization of any one network processor **906**A, **906**B, **906**C, **906**D. For example, Network Processing Units (NPUs) such as the Intel® IXP1200, described above, were originally designed to be "systems on a chip" that performed all of the required processing tasks. They provide data buses, memory buses (SDRAM and SRAM) as well as interface buses (general purpose **10** and PCI). Additionally they have multiple fast path processors, often called micro-engines, and control processors often embedded or attached via a control processor interface. In the case of the Intel IXP1200 a StrongARM control processor is embedded. These chips expect that data flows in from the data bus, is processed immediately or stored in SDRAM or SRAM memory for further processing. At the time of forwarding of the data, the data is read from the memory and forwarded out on the data bus. This methodology infers that data must traverse the data and memory buses at least twice, once to store and once to forward a packet.

The architecture of the device **900** sends packets on a data bus only once and traverse the memory bus at most twice versus a possible three times in the prior design. With regards to the memory bus the packet is written and only the portions of the packet required for inspection which were not processed as they flow through the processor need be read. This

results in a 1 to 2 times flow rate utilization of the memory bus. Forwarding is handled invisibly to the processor, via the memory fabric, and thus removes that third traditional movement of the data across the memory bus.

The single direction of traffic flow through the device **900** allows network processors **906**A, **906**B, **906**C, **906**D to be able to process data flows faster than originally intended. This is due to the fact that most processors are constrained by bus saturation. Take the IXP1200 for example, the SDRAM bus is a 6.6 Gbps bus with saturation around 5 Gbps. The IX Bus (data bus) is a 6 Gbps bus with saturation around 4.1 Gbps. To understand traffic levels that can be achieved one should take the worst case traffic flow, which is generally small packets at highest flow rate, to calculate what can be processed. The SDRAM would limit a traditional environment to 1.66 Gbps and the IX Bus would limit at 2 Gbps. These are maximums and headroom should be preserved. This estimate would suggest that Gigabit Ethernet would be the most an IXP1200 could attain. By using the network processor **906**A, **906**B, **906**C, **906**D uni-directionally, OC-48 requires only 2.5 Gbps on the data bus and no more that 5 Gbps on the memory bus. This allows existing devices to process faster than originally intended. Additionally, since the packets are moved around less, no processor is required to forward the packets which frees up more internal micro-engines for processing the packet.

This same approach can utilize the newer network processors **906**A, **906**B, **906**C, **906**D being developed to handle OC-48 and faster networks to be able to process packets at speeds up to OC-192 (10 Gbps) and faster. This can be done with external memory versus internal memory. This is a significant issue since internal memory requires a far more complex design of a network processor, increasing design time, reducing yields and increasing costs.

As can be seen, the preferred packet interception device implements scalable, transparent and non-invasive interception of packets for multiple devices. It is therefore intended that the foregoing detailed description be regarded as illustrative rather than limiting, and that it be understood that it is the following claims, including all equivalents, that are intended to define the spirit and scope of this invention.

I claim:

1. A system for processing a plurality of packets according to a first application defined by an entity, each of the plurality of packets being communicated via a network from a source to a destination intended by the source, each of the plurality of packets comprising a plurality of portions, the system comprising:

a packet interceptor coupled with the network and operative to selectively capture a packet of the plurality of packets from the network;

a processor coupled with the packet interceptor and a first memory; and

first logic stored in the first memory, the first logic being executable by the processor to allow the entity to select and relate a first set of at least two of a plurality of packet processing operations to be performed by the processor with respect to the captured packet to implement the first application, the plurality of packet processing operations including at least one of a data gathering operation, decision making operation, action taking operation or combinations thereof, the performance of at least one of the at least two packet processing operations being based on at least a portion of a previously captured packet which was communicated via the network from the destination to the source; and

wherein the processor is further coupled with second logic, the second logic defining a plurality of sub-operations executable by the processor, each of the plurality of packet processing operations being associated with a sub-set of the plurality of sub-operations, the execution of which implements the associated packet processing operation, and further wherein the performance of a packet processing operation of the plurality of packet processing operations causes the processor to automatically execute the associated sub-set of the plurality of sub-operations to implement the packet processing operation transparently to the entity.

2. The system of claim **1**, wherein the data gathering operation comprises at least one of extract data from the packet, retrieve data relating to the packet from a second memory coupled with the processor, retrieve data relating to a past packet from the second memory or combinations thereof.

3. The system of claim **1**, wherein the decision making operation comprises at least one of evaluate a function, determine a next operation to be performed by the processor, or combinations thereof.

4. The system of claim **1**, wherein the action taking operation comprises at least one of store at least a portion of the captured packet in a second memory coupled with the processor, modify at least a portion of the captured packet, delete at least a portion of the captured packet, copy at least a portion of the captured packet, forward at least a portion of the captured packet, substitute for at least a portion of the captured packet, release at least a portion of the captured packet, store data relating to at least a portion of the captured packet, take no action, modify a packet processing operation, delete a packet processing operation, select a packet processing operation, relate a packet processing operation, or combinations thereof.

5. The system of claim **1**, wherein the first logic comprises a syntax operative to define the selection and relation of each of the plurality of packet processing operations to another of the plurality of packet processing operations.

6. The system of claim **5**, wherein the syntax further defines the order in which the first processor performs each of the packet processing operations of the first set.

7. The system of claim **1**, wherein the first logic is further operative to allow the entity to select and relate a second set of at least two of the plurality of packet processing operations to be performed by the processor with respect to the packet to implement a second application, wherein said processor performs the first and second sets substantially simultaneously.

8. The system of claim **1**, wherein the first logic is further operative to allow the entity to select and relate a second set of at least two of the plurality of packet processing operations to be performed by the processor with respect to another packet selectively captured by the packet interceptor to implement a second application, wherein said processor performs the first and second sets substantially simultaneously.

9. The system of claim **1**, wherein the first logic is further operative to allow the selection and relation using graphic representations of each of the plurality of packet processing operations.

10. The system of claim **1**, wherein the first logic is further operative to allow the selection and relation using textual representations of each of the plurality of packet processing operations.

11. The system of claim **1**, wherein the first logic is further operative to encode the first set as interpreted code executable by an interpreter executed by the first processor.

12. The system of claim 1, wherein the first logic is further operative to encode the first set as object code executable by the first processor.

13. A method for processing a plurality of packets according to a first application defined by an entity, each of the plurality of packets being communicated via a network from a source to a destination intended by the source, each of the plurality of packets comprising a plurality of portions, the method comprising:

capturing, selectively, a packet of the plurality of packets from the network;

allowing the entity to select and relate a first set of at least two of a plurality of packet processing operations to be performed by a processor with respect to the captured packet to implement the first application, the plurality of packet processing operations including at least one of a data gathering operation, decision making operation, action taking operation or combinations thereof, the performance of at least one of the at least two packet processing operations being based on at least a portion of a previously captured packet which was communicated via the network from the destination to the source; and

defining a plurality of sub-operations executable by the processor, each of the plurality of packet processing operations being associated with a sub-set of the plurality of sub-operations, the execution of which implements the associated packet processing operation, and further wherein the performance of a packet processing operation of the plurality of packet processing operations causes the processor to automatically execute the associated sub-set of the plurality of sub-operations to implement the packet processing operation transparently to the entity.

14. The method of claim 13, wherein the data gathering operation comprises at least one of extracting data from the packet, retrieving data relating to the packet from a memory coupled with the processor, retrieving data relating to a past packet from the memory or combinations thereof.

15. The method of claim 13, wherein the decision making operation comprises at least one of evaluating a function, determining a next operation to be performed by the processor, or combinations thereof.

16. The method of claim 13, wherein the action taking operation comprises at least one of storing at least a portion of the captured packet in a memory coupled with the processor, modifying at least a portion of the captured packet, deleting at least a portion of the captured packet, copying at least a portion of the captured packet, forwarding at least a portion of the captured packet, substituting for at least a portion of the captured packet, releasing at least a portion of the captured packet, storing data relating to at least a portion of the captured packet, taking no action, modifying a packet processing operation, deleting a packet processing operation, selecting a packet processing operation, relating a packet processing operation, or combinations thereof.

17. The method of claim 13, wherein the allowing further comprises defining a syntax specifying the selection and relation of each of the plurality of packet processing operations to another of the plurality of packet processing operations.

18. The method of claim 17, wherein the syntax further defines the order in which the first processor performs each of the packet processing operations of the first set.

19. The method of claim 13, wherein the allowing further comprises allowing the entity to select and relate a second set of at least two of the plurality of packet processing operations to be performed by the processor with respect to the packet to implement a second application, wherein said processor performs the first and second sets substantially simultaneously.

20. The method of claim 13, wherein the allowing further comprises allowing the entity to select and relate a second set of at least two of the plurality of packet processing operations to be performed by the processor with respect to another packet selectively captured by the packet interceptor to implement a second application, wherein said processor performs the first and second sets substantially simultaneously.

21. The method of claim 13, wherein the allowing further comprises allowing the selection and relation using graphic representations of each of the plurality of packet processing operations.

22. The method of claim 13, wherein the allowing further comprises allowing the selection and relation using textual representations of each of the plurality of packet processing operations.

23. The method of claim 13, wherein the allowing further comprises encoding the first set as interpreted code executable by an interpreter executed by the first processor.

24. The method of claim 13, wherein the allowing further comprises encoding the first set as object code executable by the first processor.

25. A system for processing a plurality of packets according to a first application defined by an entity, each of the plurality of packets being communicated via a network from a source to a destination intended by the source, each of the plurality of packets comprising a plurality of portions, the method comprising:

means for capturing, selectively, a packet of the plurality of packets from the network;

means for allowing the entity to select and relate a first set of at least two of a plurality of packet processing operations to be performed by a processor with respect to the captured packet to implement the first application, the plurality of packet processing operations including at least one of a data gathering operation, decision making operation, action taking operation or combinations thereof, the performance of at least one of the at least two packet processing operations being based on at least a portion of a previously captured packet which was communicated via the network from the destination to the source; and

means for defining a plurality of sub-operations executable by the processor, each of the plurality of packet processing operations being associated with a sub-set of the plurality of sub-operations, the execution of which implements the associated packet processing operation, and further wherein the performance of a packet processing operation of the plurality of packet processing operations causes the processor to automatically execute the associated sub-set of the plurality of sub-operations to implement the packet processing operation transparently to the entity.

* * * * *

UNITED STATES PATENT AND TRADEMARK OFFICE

CERTIFICATE OF CORRECTION

PATENT NO. : 7,624,142 B2
APPLICATION NO. : 11/188260
DATED : November 24, 2009
INVENTOR(S) : Jungck

It is certified that error appears in the above-identified patent and that said Letters Patent is hereby corrected as shown below:

On the Title Page:

The first or sole Notice should read --

Subject to any disclaimer, the term of this patent is extended or adjusted under 35 U.S.C. 154(b) by 954 days.

Signed and Sealed this

Twenty-sixth Day of October, 2010

David J. Kappos

David J. Kappos
Director of the United States Patent and Trademark Office