US006980906B2

(12) **United States Patent**
Kao et al.

(10) **Patent No.: US 6,980,906 B2**
(45) **Date of Patent: *Dec. 27, 2005**

(54) **SYSTEMS AND METHODS FOR A NAVIGATIONAL DEVICE WITH FORCED LAYER SWITCHING BASED ON MEMORY CONSTRAINTS**

(75) Inventors: **Min H. Kao**, Leawood, KS (US); **Michael Childs**, Overland Park, KS (US); **Darin J. Beesley**, Overland Park, KS (US)

(73) Assignee: **Garmin Ltd.**, (KY)

(*) Notice: Subject to any disclaimer, the term of this patent is extended or adjusted under 35 U.S.C. 154(b) by 0 days.

This patent is subject to a terminal disclaimer.

(21) Appl. No.: **10/993,248**

(22) Filed: **Nov. 19, 2004**

(65) **Prior Publication Data**

US 2005/0065718 A1 Mar. 24, 2005

Related U.S. Application Data

(63) Continuation of application No. 10/841,716, filed on May 8, 2004, now Pat. No. 6,898,520, which is a continuation of application No. 10/410,428, filed on Apr. 9, 2003, now Pat. No. 6,775,612, which is a continuation of application No. 10/027,159, filed on Dec. 20, 2001, now Pat. No. 6,581,003.

(51) **Int. Cl.**[7] **G01C 21/00**
(52) **U.S. Cl.** **701/209**; 701/213
(58) **Field of Search** 701/209, 208, 701/211, 213, 214, 200; 342/357.01, 357.06, 342/357.12, 357.13

(56) **References Cited**

U.S. PATENT DOCUMENTS

3,660,812	A	5/1972	Inose et al.	340/35
3,883,847	A	5/1975	Frank	711/206
4,827,419	A	5/1989	Selby	701/200
4,926,336	A	5/1990	Yamada	701/209
4,937,753	A	6/1990	Yamada	701/209
5,208,593	A	5/1993	Tong et al.	341/65
5,343,399	A	8/1994	Yokoyama et al.	364/449
5,371,497	A	12/1994	Nimura et al.	340/995
5,410,486	A	4/1995	Kishi	364/449
5,452,212	A	9/1995	Yokoyama et al.	364/449

(Continued)

FOREIGN PATENT DOCUMENTS

AT 209809 T 12/2002

(Continued)

OTHER PUBLICATIONS

U.S. Appl. No. 10/029,917, filed Dec. 21, 2001, Krull et al.

(Continued)

Primary Examiner—Yonel Beaulieu
(74) *Attorney, Agent, or Firm*—Devon A. Rolf

(57) **ABSTRACT**

Systems, devices and methods are provided for more efficient use of RAM and other resources in connection with a route calculation algorithm which quickly obtains a best or reasonable best path between two locations. The navigational aid device includes forced layer switching capabilities. The navigational aid device includes a processor and a memory adapted to communicate with the processor. The memory has cartographic data including any number of locations and data indicative of thoroughfares of a plurality of types connecting certain ones of the locations. The plurality of thoroughfares are organized in a hierarchy of detail levels. The processor operates on a route calculation algorithm to find a path between any two of the number of locations and the route calculation algorithm dynamically forces switching between different levels in the hierarchy of detail levels based on a set of criteria.

25 Claims, 9 Drawing Sheets

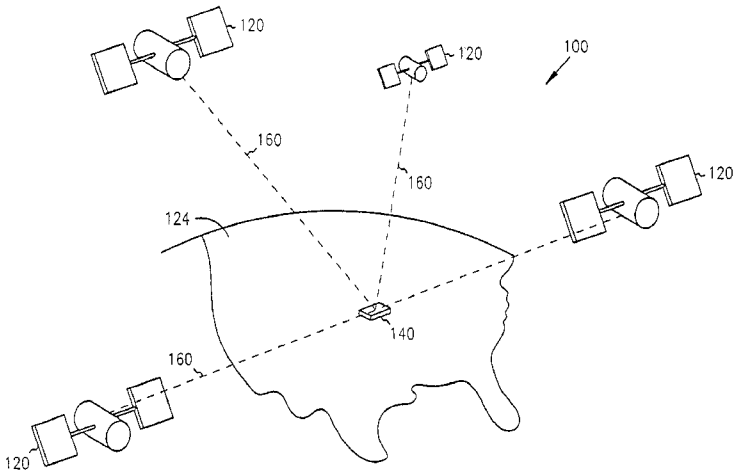

U.S. PATENT DOCUMENTS

5,452,217	A	9/1995	Kishi	364/449
5,475,599	A	12/1995	Yokoyama	364/449
5,506,578	A	4/1996	Kishi	340/996
5,528,248	A	6/1996	Steiner et al.	342/357
5,537,323	A	7/1996	Schulte	364/449
5,546,107	A	8/1996	Deretsky et al.	396/600
5,638,279	A	6/1997	Kishi et al.	364/443
5,729,109	A	3/1998	Kaneko et al.	318/587
5,729,458	A	3/1998	Poppen	364/464.1
5,739,772	A	4/1998	Nanba et al.	340/990
5,793,631	A	8/1998	Ito	364/449.5
5,809,447	A	9/1998	Kato	701/211
5,821,887	A	10/1998	Zhu	341/67
5,845,282	A	12/1998	Alley et al.	707/10
5,874,905	A	2/1999	Nanba et al.	340/995
5,878,368	A	3/1999	DeGraaf	701/209
5,893,081	A	4/1999	Poppen	705/400
5,902,349	A	5/1999	Endo et al.	701/202
5,938,721	A	8/1999	Dussell et al.	701/211
5,946,692	A	8/1999	Faloutsos et al.	707/101
5,951,622	A	9/1999	Nomura	701/212
5,953,722	A	9/1999	Lampert et al.	707/100
5,977,885	A	11/1999	Watanabe	340/995
5,978,730	A	11/1999	Poppen et al.	701/202
5,995,970	A	11/1999	Robinson et al.	707/101
6,021,406	A	2/2000	Kuznetsov	707/6
6,023,655	A	2/2000	Nomura	701/208
6,038,559	A	3/2000	Ashby et al.	707/4
6,047,280	A	4/2000	Ashby et al.	707/2
6,052,645	A	4/2000	Harada	701/212
6,061,003	A	5/2000	Harada	340/995
6,061,630	A	5/2000	Walgers et al.	701/210
6,073,076	A	6/2000	Crowley et al.	701/208
6,088,652	A	7/2000	Abe	701/208
6,112,200	A	8/2000	Livshutz et al.	707/4
6,121,314	A	9/2000	Richter et al.	514/481
6,121,900	A	9/2000	Takishita	340/995
6,122,593	A	9/2000	Friederich et al.	701/202
6,128,515	A	10/2000	Kabler et al.	455/566
6,128,573	A	10/2000	Nomura	701/208
6,151,552	A	11/2000	Koizumi et al.	701/211
6,161,092	A	12/2000	Latshaw	704/270
6,169,956	B1	1/2001	Morimoto et al.	701/209
6,172,641	B1	1/2001	Millington	342/357.13
6,182,010	B1	1/2001	Berstis	701/211
6,192,314	B1	2/2001	Khavakh et al.	702/209
6,199,013	B1	3/2001	O'Shea	701/211
6,199,045	B1	3/2001	Giniger et al.	705/1
6,202,024	B1	3/2001	Yokoyama et al.	701/207
6,202,026	B1	3/2001	Nimura et al.	701/211
6,219,457	B1	4/2001	Potu	382/246
6,249,740	B1	6/2001	Ito et al.	701/200
6,259,988	B1	7/2001	Galkowski et al.	701/202
6,263,276	B1	7/2001	Yokoyama et al.	701/207
6,263,277	B1	7/2001	Tanimoto et al.	701/209
6,266,612	B1	7/2001	Dussell et al.	701/207
6,266,615	B1	7/2001	Jin	701/213
6,285,951	B1	9/2001	Gaskins et al.	701/209
6,298,303	B1	10/2001	Khavakh et al.	702/209
6,308,177	B1	10/2001	Israni et al.	707/100
6,317,684	B1	11/2001	Roeseler et al.	701/202
6,317,687	B1	11/2001	Morimoto et al.	701/211
6,321,158	B1	11/2001	DeLorme et al.	701/201
6,381,535	B1	4/2002	Durocher et al.	701/202
6,393,149	B2	5/2002	Friederich et al.	382/173
6,401,035	B2	6/2002	Jin	701/213
6,405,123	B1	6/2002	Rennard et al.	701/200
6,411,899	B2	6/2002	Dussell et al.	701/211
6,460,046	B1	10/2002	Meek	707/102
6,477,526	B2	11/2002	Hayashi et al.	707/4
6,484,093	B1	11/2002	Ito et al.	701/211
6,504,496	B1	1/2003	Mesarovic et al.	341/106
6,505,123	B1	1/2003	Root et al.	702/3
6,510,379	B1	1/2003	Hasegawa et al.	701/202
6,512,525	B1	1/2003	Capps et al.	345/762
6,532,152	B1	3/2003	White et al.	361/692
6,535,743	B1	3/2003	Kennedy et al.	455/456.1
6,563,440	B1	5/2003	Kangas	341/65
6,574,553	B1	6/2003	Beesley et al.	701/209
6,574,554	B1	6/2003	Beesley et al.	701/209
6,594,666	B1	7/2003	Biswas et al.	707/100
6,615,131	B1	9/2003	Rennard et al.	701/200
6,650,996	B1	11/2003	Beesley et al.	701/200
6,675,093	B1	1/2004	Childs et al.	701/209
6,704,645	B1	3/2004	Beesley et al.	701/202
6,775,612	B1 *	8/2004	Kao et al.	701/209
6,799,115	B1	9/2004	Childs et al.	701/200
6,807,483	B1	10/2004	Chao et al.	701/210
6,823,256	B1	11/2004	Burt	701/200
6,839,624	B1	1/2005	Beesley et al.	701/200
6,845,322	B1	1/2005	Chao et al.	701/209
6,847,890	B1	1/2005	Childs et al.	701/211
6,850,842	B2	2/2005	Park	701/210
6,856,893	B2	2/2005	Beesley et al.	701/202
6,856,900	B1	2/2005	Childs et al.	701/209
6,892,135	B1	5/2005	Krull et al.	701/211
6,898,520	B2	5/2005	Kao et al.	701/209
2001/0043745	A1	11/2001	Frederich et al.	382/232
2001/0045949	A1	11/2001	Chithambaram et al.	345/418
2001/0056327	A1	12/2001	Jin	701/213
2002/0091527	A1	7/2002	Shiau	704/270.1
2002/0102988	A1	8/2002	Myliymaki	455/456.6
2002/0120753	A1	8/2002	Levanon et al.	709/228
2002/0173905	A1	11/2002	Jin	701/207
2003/0006913	A1	1/2003	Joyce et al.	340/994
2003/0006918	A1	1/2003	Barnett	341/67
2003/0013483	A1	1/2003	Ausems et al.	455/556.1
2003/0045301	A1	3/2003	Wollrab	455/456
2003/0045998	A1	3/2003	Medl	701/207
2003/0048599	A1	3/2003	Martin	361/683
2003/0069899	A1	4/2003	Brown et al.	707/200
2003/0105845	A1	6/2003	Leermakers	709/221
2003/0131023	A1	7/2003	Bassett et al.	707/200
2003/0131059	A1	7/2003	Brown et al.	709/206
2003/0139150	A1	7/2003	Rodriguez et al.	455/90.1
2004/0220726	A1	11/2004	Jin	701/207

FOREIGN PATENT DOCUMENTS

CN	1391687 T	10/2003
FR	2818414	6/2002
JP	08-221694	8/1996
JP	10-132594	5/1998
WO	01/23839	4/2001
WO	02/060157	11/2003
WO	01/61276	3/2004
WO	02/103291	3/2004
WO	03/058170	10/2004

OTHER PUBLICATIONS

U.S. Appl. No. 10/032,196, filed Dec. 21, 2001, Childs et al.
U.S. Appl. No. 10/032,250, filed Dec. 21, 2001, Childs et al.
U.S. Appl. No. 10/086,370, filed Feb. 18, 2002, Childs et al.
U.S. Appl. No. 10/269,573, filed Oct. 11, 2002, Childs et al.
U.S. Appl. No. 10/423,658, filed Apr. 25, 2003, Beesley et al.
U.S. Appl. No. 10/660,835, filed Sep. 12, 2003, Beesley et al.
U.S. Appl. No. 10/657,972, filed Sep. 9, 2003, Beesley et al.
U.S. Appl. No. 10/718,774, filed Nov. 21, 2003, Childs et al.
U.S. Appl. No. 10/841,716, filed May 8, 2004, Kao et al.
Nekritch, Y.; Byte-oriented decoding of canonical Huffman codes; IEEE-Information Theory 2000; Jun. 2000; p. 371.

Chung et al.; Level-Compressed Huffman Decoding; IEEE-Transactions on Communication; Oct. 1999; vol. 47, No. 10; pp. 1455-1457.
"An optimal pathfinder for vehicles in real-world digital terrain maps", http://www.nease.net/jamsoft/shortestpath/pathfinder/4.html, 11 pages, (1999).
"Informed Search Methods", Artificial Intelligence, A Modern Approach, Prentice Hall, Inc., pp. 92-115, (1995).
"Real-Time Vehicle Routing in Dynamic and Stochastic Urban Traffic Networks", http://www.gpu.srv.ualberta.ca/lfu/research.htm, pp. 1-3, (1997).
Ahuja, R., et al., "Faster Algorithms for the Shortest Path Problem", Journal of the Association for Computing Machinery, 37(2), pp. 213-223, (1990).
Chung, V., et al. "An Efficient Implementation of Parallel A*", CFPAR, Montreal, Canada, pp. 153-167, (1994).
Fredman, M., et al., "Fibonacci heaps and their uses in improved network optimization algorithms", Journal of the ACM, 34(3), 2 pages, (1987).
Fu, L., "Heuristic Shortest Path Algorithms and their Potential IVHS Applications", Proceedings of the Fourth University of Alberta—University of Calgary, Joint Graduate Student Symposium in Transportation Engineering, pp. 83-109, (1995).
Ikeda, T., et al., "A Fast Algorithm for Finding Better Routes by AI Search Techniques", Vehicle Navigation and Information Systems Conference Proceedings, pp. 291-296, (1994).
Kaindl, H., et al., "Memory-Bounded Bidirectional Search", Proceedings of the 12th National Conference on Art, AAAI press, Seattle, WA, pp. 1359-1364, (1994).
Laporte, G., "The Vehicle Routing Problem: An overview of exact and approximate algorithms", European Journal of Operational Research, 59, pp. 345-358, (1992).
Myers, B., "Data Structures for Best-First Search", http://www4.ncsu.edu/jbmyers/dsai.htm, pp. 1-6, (1997).
Ronngren, R., et al., "Parallel and Sequential Priority Queue Algorithms", ACM Transactions on Modeling and Computer Simulation, 7 (2), pp. 168-172, 198, 199, (1997).
Stout, B., "Smart Moves: Intelligent Pathfinding", Gamasutra, http://www.gamasutra.com/features/programming/080197/pathfinding.htm, pp. 1-11, (1997).
Wai, L., et al., "Comparative Study of Shortest Path Algorithm for Transport Network", USRP Report 2, http://www.comp.nus.edu.sg/,leonghoe/USRPreport-txt.html, pp. 1-10, (1999).
Zhan, F.B., "Three Fastest Shortest Path Algorithms on Real Road Networks: Data Structures and Procedures", Journal of Geographic Information and Decision Analysis, 1 (1), http://www.geog.uwo.ca/gimda/journal/vol1.1/Zhan/Zhan.htm, 11 pages, (1997).
Zhao, Y., et al., "An Adaptive Route-Guidance Algorithm for Intelligent Vehicle Highway Systems", American Control Conference, Boston, MA, Department of Electrical Engineering and Computer Science, The University of Michigan, pp. 2568-2573, (1991).
Oberhauser et al.; Fast data structures for shortest path routing: a comparative evaluation; 1995 IEEE International Conference on Gateway to Globalization; Jun. 1995; vol. 3, pp. 1597-1601.
Cung, V., et al. "An Efficient Implementation of Parallel A*", CFPAR, Montreal, Canada, pp. 153-167, (1994).

* cited by examiner

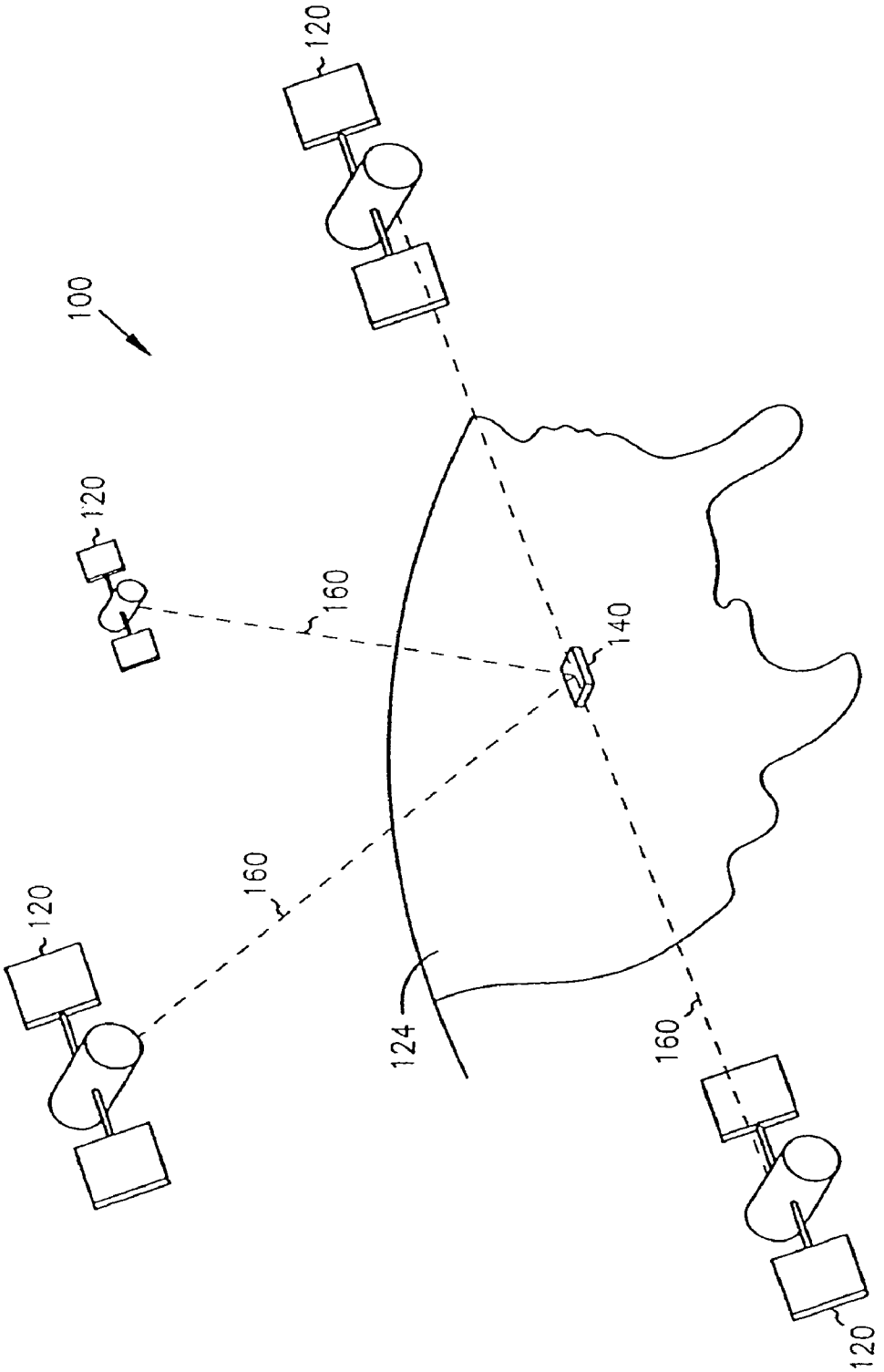

FIG. 1

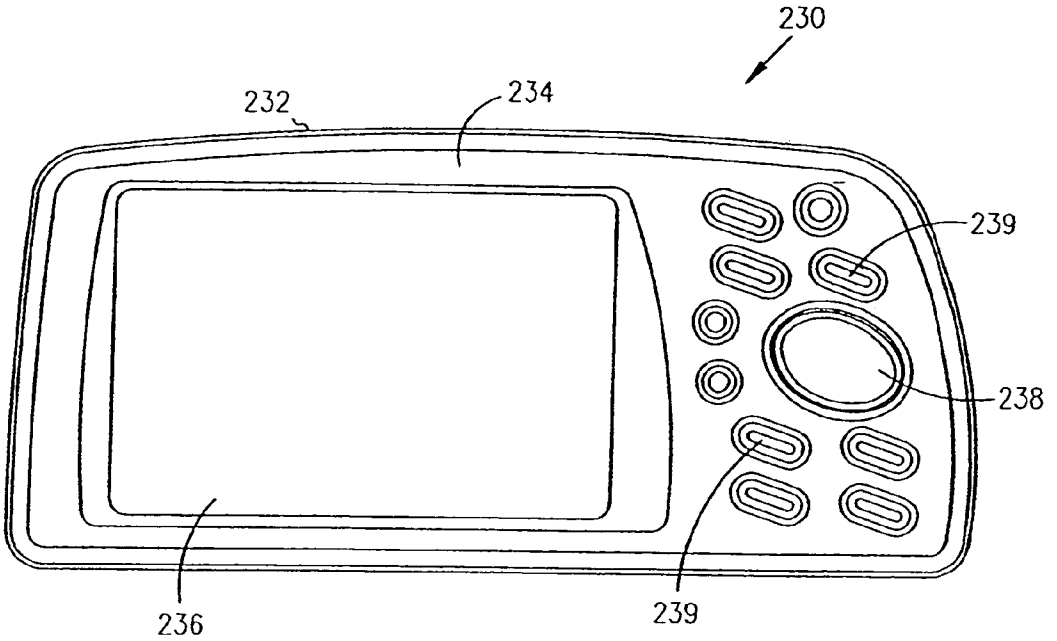

FIG. 2A

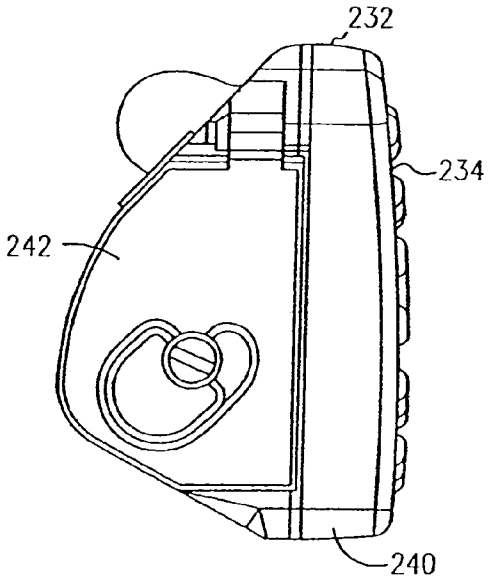

FIG. 2B

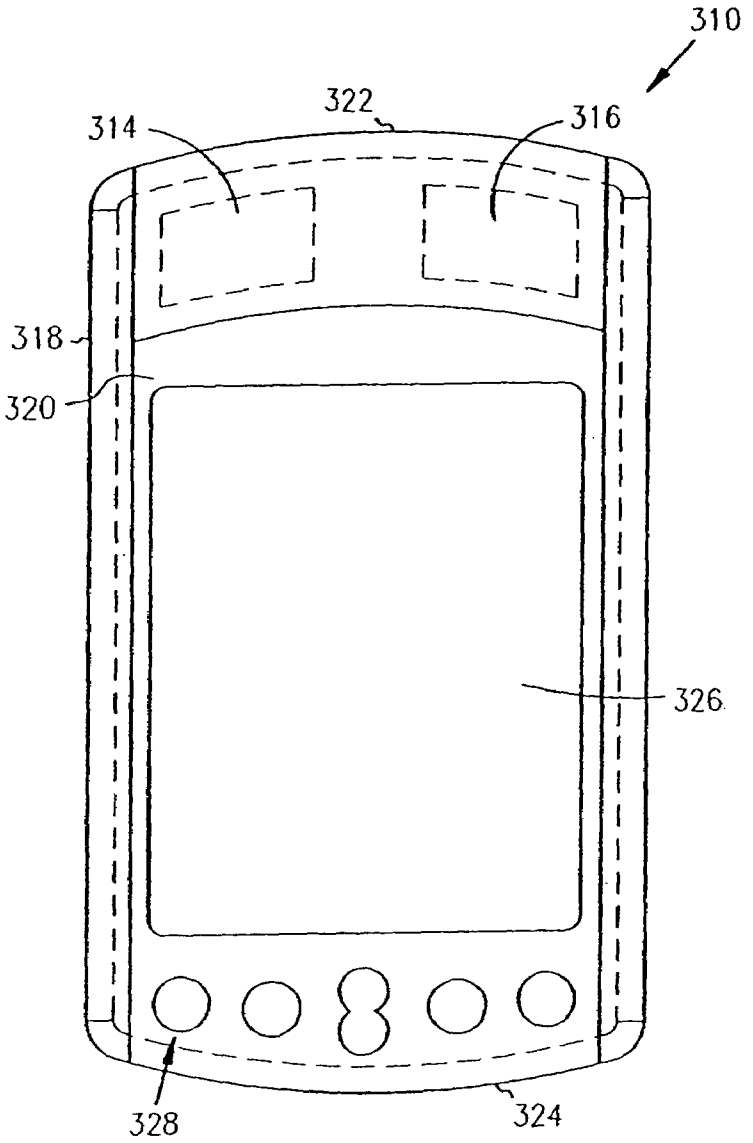

FIG. 3A

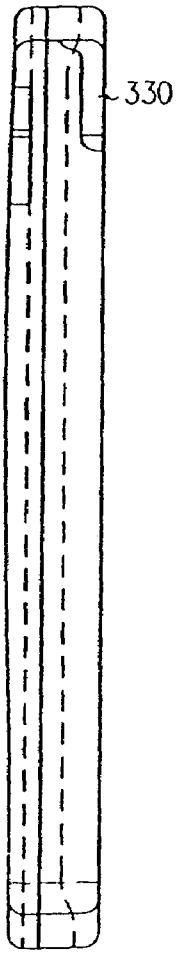

FIG. 3B

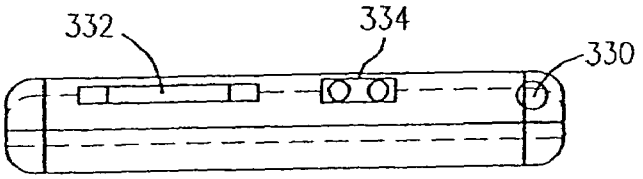

FIG. 3C

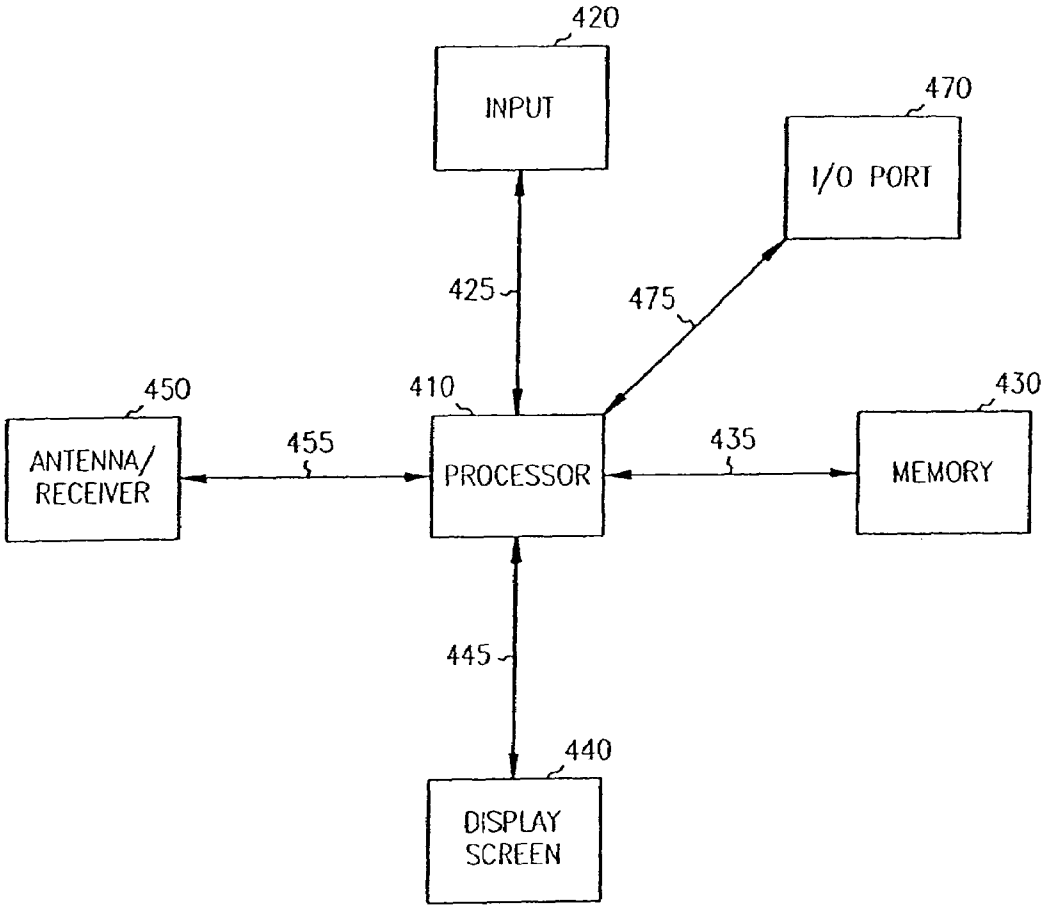
420
INPUT
470
I/O PORT
425
475
450
410
430
ANTENNA/
RECEIVER
455
PROCESSOR
435
MEMORY
445
440
DISPLAY
SCREEN

FIG. 4A

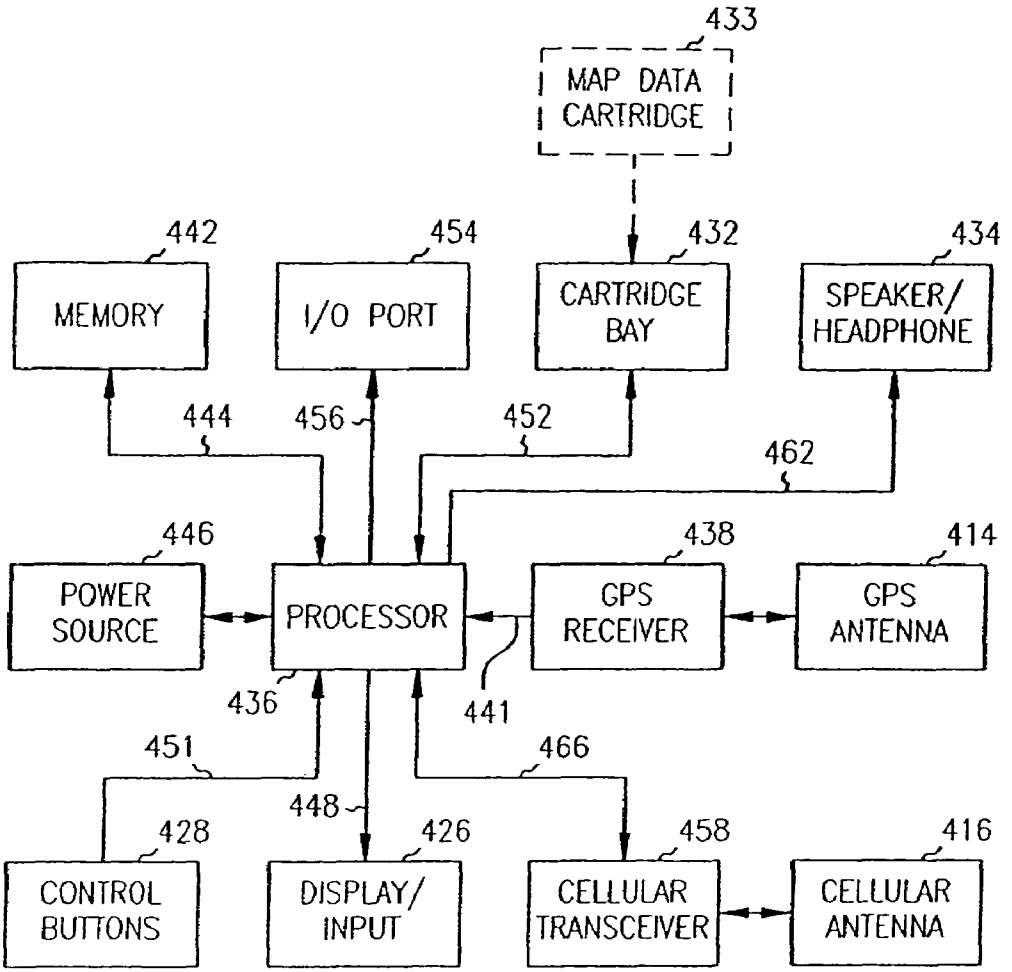
433
MAP DATA CARTRIDGE
442
MEMORY
454
I/O PORT
432
CARTRIDGE BAY
434
SPEAKER/ HEADPHONE
444
456
452
462
446
POWER SOURCE
PROCESSOR
438
GPS RECEIVER
414
GPS ANTENNA
436
441
451
466
448
428
CONTROL BUTTONS
426
DISPLAY/ INPUT
458
CELLULAR TRANSCEIVER
416
CELLULAR ANTENNA

FIG. 4B

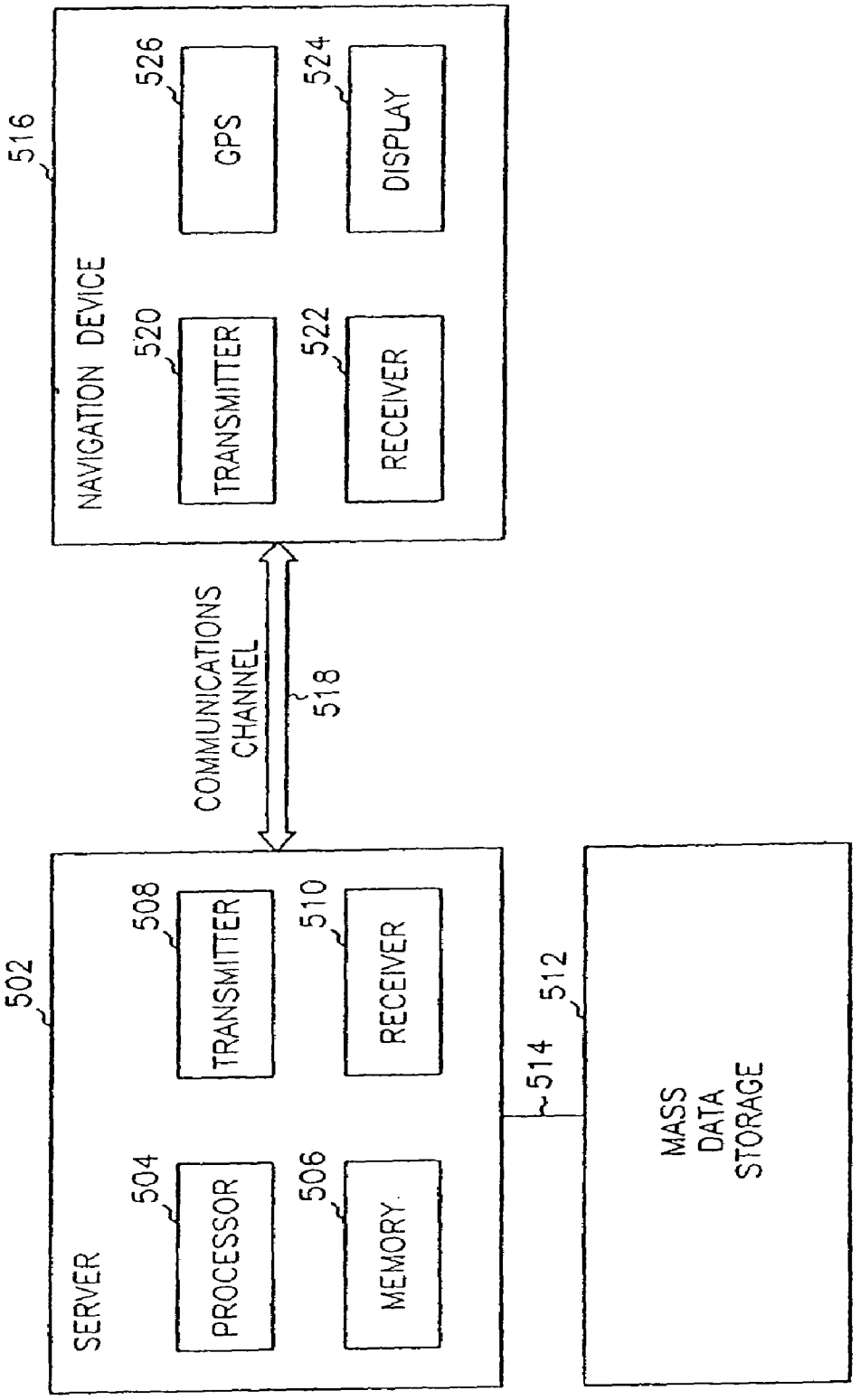
516
NAVIGATION DEVICE
526
GPS
524
DISPLAY
520
TRANSMITTER
522
RECEIVER
COMMUNICATIONS CHANNEL
518
502
SERVER
508
TRANSMITTER
510
RECEIVER
504
PROCESSOR
506
MEMORY
514
512
MASS DATA STORAGE

FIG. 5

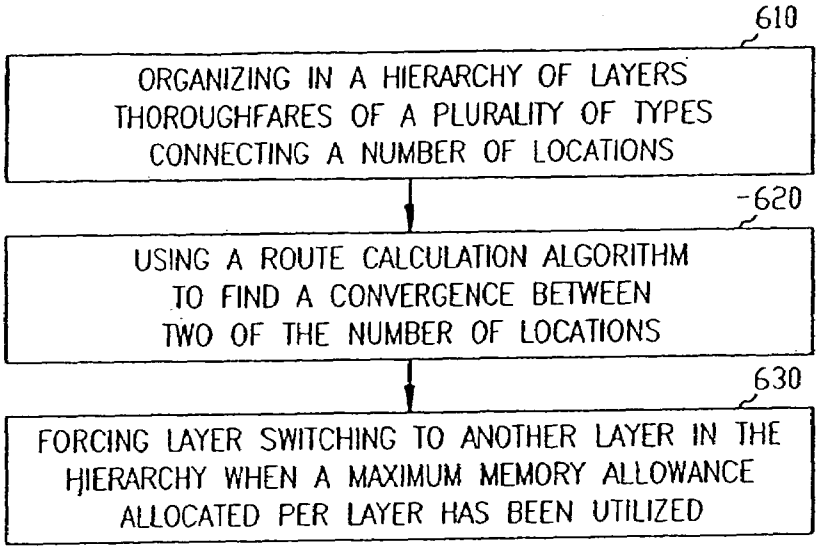
610
ORGANIZING IN A HIERARCHY OF LAYERS THOROUGHFARES OF A PLURALITY OF TYPES CONNECTING A NUMBER OF LOCATIONS
620
USING A ROUTE CALCULATION ALGORITHM TO FIND A CONVERGENCE BETWEEN TWO OF THE NUMBER OF LOCATIONS
630
FORCING LAYER SWITCHING TO ANOTHER LAYER IN THE HIERARCHY WHEN A MAXIMUM MEMORY ALLOWANCE ALLOCATED PER LAYER HAS BEEN UTILIZED

FIG. 6

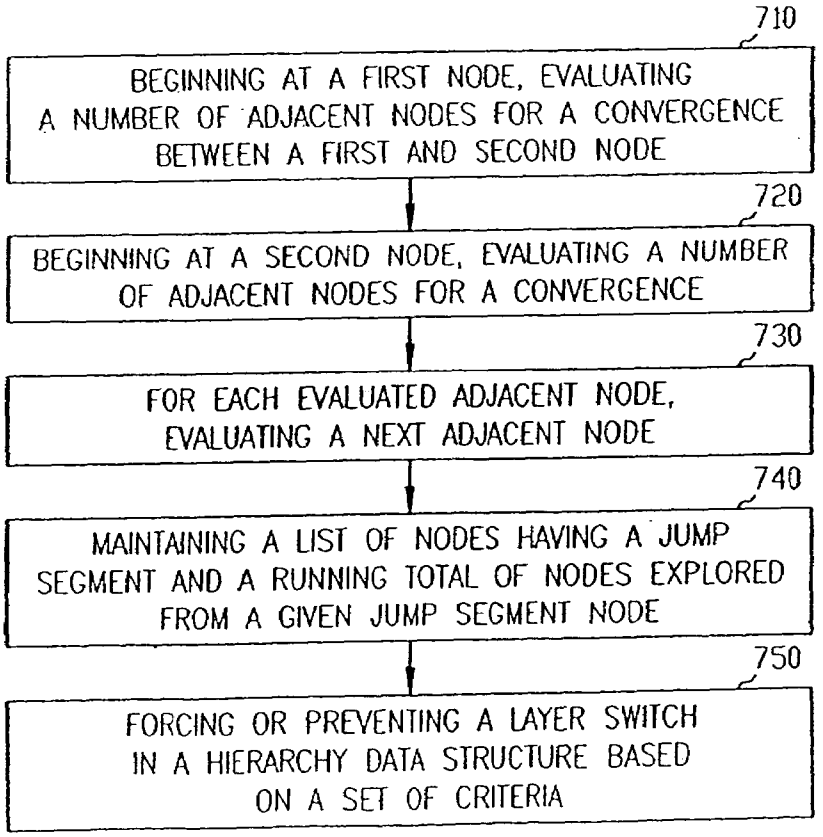
710
BEGINNING AT A FIRST NODE, EVALUATING A NUMBER OF ADJACENT NODES FOR A CONVERGENCE BETWEEN A FIRST AND SECOND NODE
720
BEGINNING AT A SECOND NODE, EVALUATING A NUMBER OF ADJACENT NODES FOR A CONVERGENCE
730
FOR EACH EVALUATED ADJACENT NODE, EVALUATING A NEXT ADJACENT NODE
740
MAINTAINING A LIST OF NODES HAVING A JUMP SEGMENT AND A RUNNING TOTAL OF NODES EXPLORED FROM A GIVEN JUMP SEGMENT NODE
750
FORCING OR PREVENTING A LAYER SWITCH IN A HIERARCHY DATA STRUCTURE BASED ON A SET OF CRITERIA

FIG. 7

LEVEL	NUMBER OF JUMP SEGMENTS, NUMBER OF NODES EXPLORED FROM A GIVEN JUMP SEGMENT NODE			(4) MINIMUM DISTANCE IN KILOMETERS	(5) MAXIMUM MEMORY USE PERCENTAGE	(6) MINIMUM MEMORY USE PERCENTAGE
0	1,25	2,15	6,0	3	35	3
1	1,40	2,25	6,0	25	60	10
2	1,50	4,30	16,0	100	80	25
3	1,50	4.30	16,0	400	85	55
4	1,50	4,30	16,0	800	90	85
	A,B (1)	A,B (2)	A,B (3)			

FIG. 8

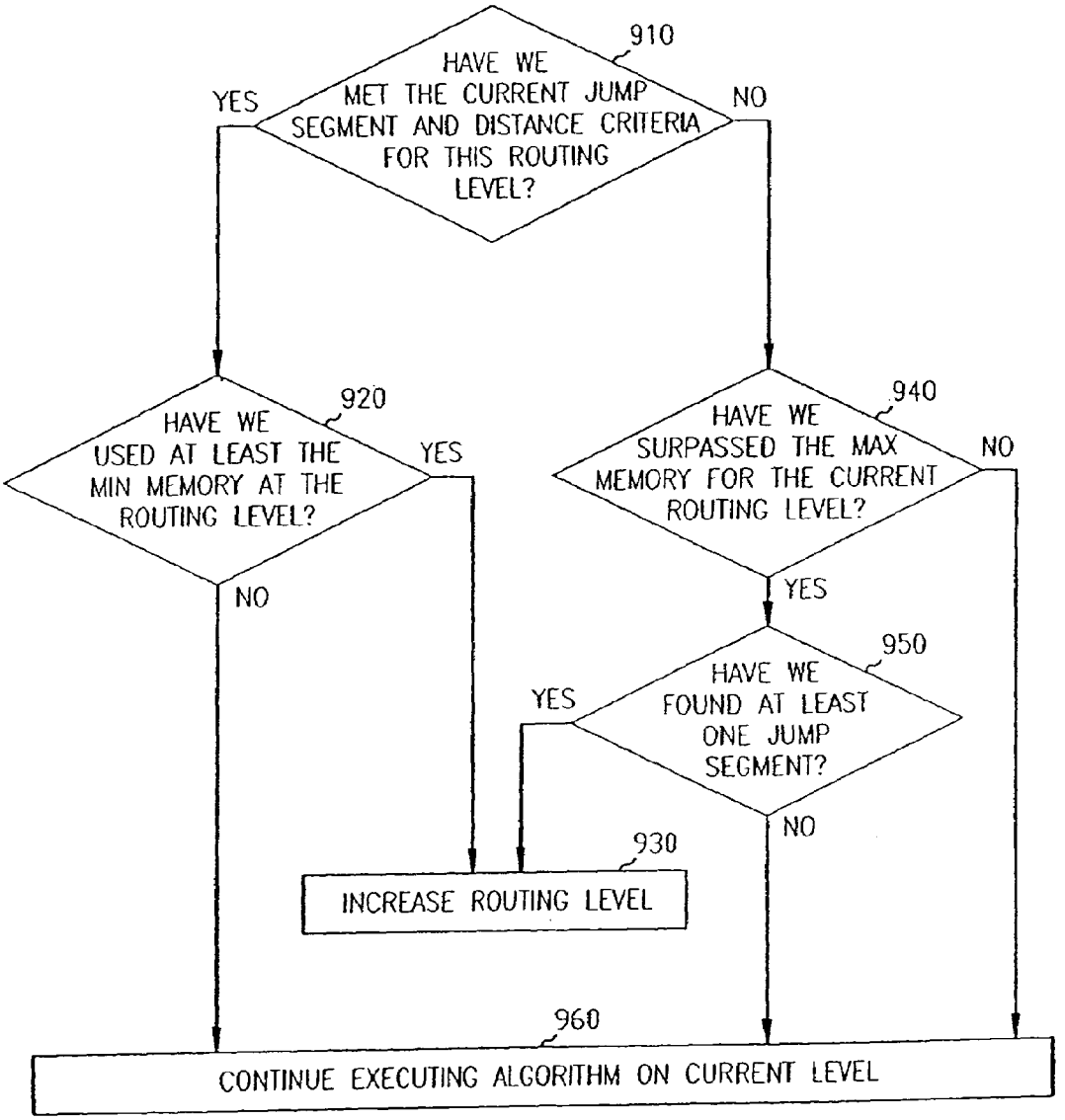
910
HAVE WE MET THE CURRENT JUMP SEGMENT AND DISTANCE CRITERIA FOR THIS ROUTING LEVEL?
YES
NO
920
HAVE WE USED AT LEAST THE MIN MEMORY AT THE ROUTING LEVEL?
YES
NO
940
HAVE WE SURPASSED THE MAX MEMORY FOR THE CURRENT ROUTING LEVEL?
NO
YES
950
HAVE WE FOUND AT LEAST ONE JUMP SEGMENT?
YES
NO
930
INCREASE ROUTING LEVEL
960
CONTINUE EXECUTING ALGORITHM ON CURRENT LEVEL

FIG. 9

SYSTEMS AND METHODS FOR A NAVIGATIONAL DEVICE WITH FORCED LAYER SWITCHING BASED ON MEMORY CONSTRAINTS

CROSS-REFERENCE TO RELATED APPLICATIONS

This application is a Continuation and claims priority benefit of U.S. application Ser. No. 10/841,716, filed May 8, 2004, now U.S. Pat. No. 6,898,520 which is a Continuation and claimed priority benefit of U.S. application Ser. No. 10/410,428, filed Apr. 9, 2003 and now issued as U.S. patent application No. 6,775,612, which is a Continuation claimed priority benefit of U.S. application Ser. No. 10/027,159, filed Dec. 20, 2001 and now issued as U.S. patent application No. 6,581,003. The specifications of above-identified applications are incorporated herein by reference.

BACKGROUND OF THE INVENTION

Route planning devices are well known in the field of navigational instruments. The method of route planning implemented by known prior art systems depends on the capabilities of system resources, such as processor speed and the amount and speed of memory. As increased system capability also increases system cost, the method of route planning implemented by a navigation device is a function of overall system cost.

One feature of increased system capability cost relates to route calculating algorithms. By their nature, route calculation algorithms are greedy algorithms that tend to be somewhat exponentially behaved in the sense that the bigger that a route network gets, the bigger the solutions base gets for finding a convergence between one location and another location. As used herein, the term convergence implies an attempt to connect a path, or a route between the two location points. The term solution is intended to imply a completed convergence. In other words, a solution, as used herein, implies a complete continuous path connecting the two location points. As one of ordinary skill in the art will understand upon reading this disclosure, there may be only one or many in-numerable solutions between two points. Alternatively stated, there can be few or many ways to find a convergence between the two locations.

From this description one can appreciate that as an algorithm executes in a convergence sequence, attempting to find a solution or path between two different locations within cartographic data, memory space is required to store the explored routes between those two locations. As the path network being processed becomes larger, the memory space required to store the explored routes between two locations likewise becomes larger. And additionally, the potential solutions base becomes larger.

In order to process route calculation algorithms with a suitable speed or efficiency, the processor executing the algorithm will require quick access to the memory space. Dynamic random access memory, or dynamic (RAM) as it is commonly referred to, is one form of quickly accessible memory which is frequently used in conjunction with a processor to execute algorithms. All routing algorithms need to have a suitable memory to keep track of status information of the locations explored, i.e. that it has visited in the network, as the route calculation algorithm executes. Again, as the path network being processed becomes larger, the necessary memory increases. Unfortunately, unlimited memory, RAM or otherwise, is not always available or

suitable for a particular application, e.g. the particular device implementation. Thus, the ability of a route planning device to obtain solutions between two points using a route calculation algorithm is a function of available memory. And, the amount of memory that is required naturally has an impact on product cost.

One approach to route calculation algorithms is to arrange a route network in a sort of hierarchy so that the processor/memory system can operate on the primary thoroughfares in favor of more minor ones. Conventionally, a navigable network is comprised of roads, ferry routes, and possibly other means to travel from one location in the network to another. The navigable network is described as a collection of intersections (known as nodes) of navigable features and links, arcs or paths (road, ferry, etc.) connecting nodes. Thus, the navigable network is viewed as a collection of nodes where a travel direction decision might need to be made, and a collection of links or arcs connecting the nodes and describing a travel path from one node to another. The term adjacency is conventionally used to describe the travel path and nodes reachable in the network from a given node. A solution between two points in the network involves iteratively examining the adjacencies from the start and destinations in the network, eventually 'discovering' a low-cost path.

One limiting factor for the route calculation algorithm is the size of the navigable network. As an example, a connected network of all the roadways in the United States contains a very large number of nodes and possible pathways, more than any practical system can evaluate. The lowest layer (level 0) would typically contain all navigable features, from small residential roadways through major interstates. Level 1 might be defined to omit residential level roads, but include collector or arterial level roads up through major interstates. Additional levels are typically defined, with only the most major thoroughfares through a region (such as interstate highways) defined at the highest routing level. Each level is conventionally defined to result in a fully connected network. The number of navigable features at level 0 is very large, as is the solution space for a routing algorithm operating only at level 0. Upper level networks contain far fewer navigable features, allowing the solution space to decrease dramatically.

Many conventional routing algorithms take advantage of this layering by first searching at the lowest defined layer (conventionally layer 0), and then switching to upper level layers as a function of implementation-specific switching criteria. As the algorithm progresses it conventionally seeks to switch from lower to higher layers, eventually searching only in the highest defined layer, which affords route traversal across large distances within a comparatively small solution space. Of course, a suitable solution may be found prior to reaching the highest routing level. It is through this approach that a system with limited search resources is able to obtain a good, though not necessarily optimal, solution from a very large solution space. Algorithms of this sort are conventionally bidirectional, searching simultaneously from the start and target locations in the routing network.

Almost all practically implemented routing algorithms use this hierarchical approach in order to afford an obtainable solution for any processor/memory system that has a limited amount of memory and a limited amount of computing power.

Many contemporary systems use a minimum of one to two megabytes (MB) of dynamic memory storage capacity to obtain solutions between two points of cartographic data using conventional route calculation algorithms. Compara-

tively speaking, 2 megabytes of memory is a lot of memory and is a luxury which is not always realizable in compact, low power device implementations such as handheld or portable devices. Even with 2 megabytes of RAM no routing algorithm can even begin to explore every path in a large thoroughfare network; that would require Gigabytes of memory. Additionally, exhaustively exploring every adjacency at every hierarchal level, even with unlimited memory, is not an effective use of a system's resources.

Indeed, some conventional processor/memory systems attempt to obtain solutions in a minimized memory storage space, e.g. using around 512 Kilobytes of RAM. However, such conventional systems frequently do not result in very good solutions. That is, those conventional systems may provide a solution between the two points. But, the solution will not include a best or even reasonably best path between the two locations when weighing all of the relevant criteria, e.g. shortest path, fastest path, path classification and so forth, due to their conventional algorithm approaches.

In summary, current prior art systems have created a spectrum of products in which the degree of navigational accuracy is dictated primarily by the cost of the system. The lower cost systems currently offer a low degree of accuracy that is often inadequate for users. Therefore, there exists a need for a navigational route planning device which is more efficient and accurate than current low cost systems, without requiring more expensive system resources. In addition, there is also a need for a navigational route planning device which provides more efficient use of memory and other resources in connection with a route calculation algorithm and which quickly obtains a best or reasonable best path between two locations.

SUMMARY OF THE INVENTION

The above mentioned problems of navigational devices are addressed by the present invention and will be understood by reading and studying the following specification. Systems and methods are provided for a navigational route planning device which is more efficient and accurate than current low cost systems, without requiring the more expensive system resources. The systems and methods of the present invention offer an improved navigational route planning device which provides a more efficient use of RAM and other resources in connection with a route calculation algorithm which quickly obtains a best or reasonable best path between two locations.

In one embodiment of the present invention, an electronic navigational aid device with forced layer switching based on memory constraints is provided. The navigational aid device includes a processor and a memory adapted to communicate with the processor. The memory has cartographic data including any number of locations and data indicative of thoroughfares of a plurality of types connecting certain ones of the locations. The plurality of thoroughfares are organized in a hierarchy of detail levels. The processor operates on a route calculation algorithm to find a path between any two of the number of locations and the route calculation algorithm dynamically forces switching between different levels in the hierarchy of detail levels based on a set of criteria.

These and other embodiments, aspects, advantages, and features of the present invention will be set forth in part in the description which follows, and in part will become apparent to those skilled in the art by reference to the following description of the invention and referenced drawings or by practice of the invention. The aspects, advantages, and features of the invention are realized and attained by means of the instrumentalities, procedures, and combinations particularly pointed out in the appended claims.

BRIEF DESCRIPTION OF THE DRAWINGS

FIG. **1** is a representative view of a Global Positioning System (GPS);

FIGS. **2**A and **2**B illustrate views for one embodiment of an electronic navigational device according to the teachings of the present invention;

FIGS. **3**A–**3**C illustrate views for another embodiment of an electronic navigational device according to the teachings of the present invention;

FIG. **4**A is a block diagram of one embodiment for the electronic components within the hardware of FIGS. **2**A–**2**B according to the teachings of the present invention;

FIG. **4**B is a block diagram of one embodiment for the electronic components within the hardware of FIGS. **3**A–**3**C according to the teachings of the present invention;

FIG. **5** is a block diagram of a navigation system according to the teachings of the present invention;

FIG. **6** is a flow diagram of one embodiment of a navigation aid method according to the teachings of the present invention; and

FIG. **7** is a flow diagram of another embodiment of a navigation aid method according to the teachings of the present invention.

FIG. **8** provides a table which is useful for understanding one embodiment of the different set of criteria used to force or to prevent layer switching according to the teachings of the present invention.

FIG. **9** illustrates yet another flow diagram embodiment for a navigation aid method according to the teachings of the present invention.

DETAILED DESCRIPTION OF THE INVENTION

In the following detailed description of the invention, reference is made to the accompanying drawings which form a part hereof, and in which is shown, by way of illustration, specific embodiments in which the invention may be practiced. The embodiments are intended to describe aspects of the invention in sufficient detail to enable those skilled in the art to practice the invention. Other embodiments may be utilized and changes may be made without departing from the scope of the present invention. The following detailed description is, therefore, not to be taken in a limiting sense, and the scope of the present invention is defined only by the appended claims, along with the full scope of equivalents to which such claims are entitled.

The present invention is drawn to navigational systems and devices having forced layer switching, route calculation capabilities. One type of navigational system includes Global Positioning Systems (GPS). Such systems are known and have a variety of uses. In general, GPS is a satellite-based radio navigation system capable of determining continuous position, velocity, time, and in some instances direction information for an unlimited number of users. Formally known as NAVSTAR, the GPS incorporates a plurality of satellites which orbit the earth in extremely precise orbits. Based on these precise orbits, GPS satellites can relay their location to any number of receiving units.

The GPS system is implemented when a device specially equipped to receive GPS data begins scanning radio frequencies for GPS satellite signals. Upon receiving a radio signal from a GPS satellite, the device can determine the

precise location of that satellite via one of different conventional methods. The device will continue scanning for signals until it has acquired at least three different satellite signals. Implementing geometric triangulation, the receiver utilizes the three known positions to determine its own two-dimensional position relative to the satellites. Additionally, acquiring a fourth satellite signal will allow the receiving device to calculate its three-dimensional position by the same geometrical calculation. The positioning and velocity data can be updated in real time on a continuous basis by an unlimited number of users.

FIG. **1** is representative of a GPS denoted generally by reference numeral **100**. A plurality of satellites **120** are in orbit about the Earth **124**. The orbit of each satellite **120** is not necessarily synchronous with the orbits of other satellites **120** and, in fact, is likely asynchronous. A GPS receiver device **140** of the present invention is shown receiving spread spectrum GPS satellite signals **160** from the various satellites **120**.

The spread spectrum signals **160** continuously transmitted from each satellite **120** utilize a highly accurate frequency standard accomplished with an extremely accurate atomic clock. Each satellite **120**, as part of its data signal transmission **160**, transmits a data stream indicative of that particular satellite **120**. It will be appreciated by those skilled in the relevant art that the GPS receiver device **140** must acquire spread spectrum GPS satellite signals **160** from at least three satellites **120** for the GPS receiver device **140** to calculate its two-dimensional position by triangulation. Acquisition of an additional signal **160**, resulting in signals **160** from a total of four satellites **120**, permits GPS receiver device **140** to calculate its three-dimensional position.

FIGS. **2**A and **2**B illustrate views for one embodiment of an electronic navigational device **230** according to the teachings of the present invention. As one of ordinary skill in the art will understand upon reading this disclosure, the device can be portable and can be utilized in any number of implementations such as automobile, personal marine craft, and avionic navigation. In the embodiment of FIG. **2**A a front view of the navigational device **230** is provided showing the navigational device has a generally rectangular housing **232**. The housing **232** is constructed of resilient material and has been rounded for aesthetic and ergonomic purposes. As shown in FIG. **2**A, the control face **234** has access slots for an input key pad **238**, other individual keys **239**, and a display screen **236**. In one embodiment, the display screen **236** is a LCD display which is capable of displaying both text and graphical information. The invention, however, is not so limited. Audio information can likewise be provided in one embodiment.

In FIG. **2**B, a side view of the navigational device **230** is provided. FIG. **2**B illustrates that the device's housing **232** is defined by an outer front case **240** and a rear case **242**. As shown in FIG. **2**B, the outer front case **240** is defined by the control face **234**. In the embodiment shown in FIG. **2**B, the outer front case **240** and the rear case **242** are made of one molded piece to form the device housing **232** and support input key pad **238**, other individual keys **239**, and display screen **236** in respective access slots shown in the control face **234** of FIG. **2**A.

FIGS. **3**A–**3**C illustrate views for another embodiment of an electronic navigational device **310** according to the teachings of the present invention. The navigational device **310** shown in FIGS. **3**A–**3**C includes a personal digital assistant (PDA) with integrated GPS receiver and cellular transceiver according to the teachings of the present invention. The GPS integrated PDA operates with an operating system (OS) such as, for example, the well-known Palm or Pocket PC operating systems, or the lesser-used Linux OS. As shown in the top view of FIG. **3**A, the GPS integrated PDA **310** includes an internal integrated GPS patch antenna **314** and a cellular transceiver **316** contained in a housing **318**. The housing **318** is generally rectangular with a low profile and has a front face **320** extending from a top end **322** to a bottom end **324**. Mounted on front face **320** is a display screen **326**, which is touch sensitive and responsive to a stylus **330** (shown stored in the side view of FIG. **3**B) or a finger touch. FIGS. **3**A–**3**C illustrate the stylus **330** nested within housing **318** for storage and convenient access in a conventional manner. The embodiment shown in FIG. **3**A illustrates a number of control buttons, or input keys **328** positioned toward the bottom end **324**. The invention, however, is not so limited and one of ordinary skill in the art will appreciate that the input keys **328** can be positioned toward the top end **322** or at any other suitable location. The end view of FIG. **3**C illustrates a map data cartridge bay slot **332** and headphone jack **334** provided at the top end **322** of the housing **318**. Again, the invention is not so limited and one of ordinary skill in the art will appreciate that a map data cartridge bay slot **332** and headphone jack **334** can be provided at the bottom end **324**, separately at opposite ends, or at any other suitable location.

It should be understood that the structure of GPS integrated PDA **310** is shown as illustrative of one type of integrated PDA navigation device. Other physical structures, such as a cellular telephone and a vehicle-mounted unit are contemplated within the scope of this invention.

FIGS. **2**A–**2**B and **3**A–**3**C are provided as illustrative examples of hardware components for a navigational device according to the teachings of the present invention. However, the invention is not limited to the configuration shown in FIGS. **2**A–**2**B and **3**A–**3**C. One of ordinary skill in the art will appreciate other suitable designs for a hardware device which can accommodate the present invention.

FIG. **4**A is a block diagram of one embodiment for the electronic components within the hardware of FIGS. **2**A–**2**B, such as within housing **332** and utilized by the electronic navigational device. In the embodiment shown in FIG. **4**A, the electronic components include a processor **410** which is connected to an input **420**, such as keypad via line **425**. It will be understood that input **420** may alternatively be a microphone for receiving voice commands. Processor **410** communicates with memory **430** via line **435**. Processor **410** also communicates with display screen **440** via line **445**. An antenna/receiver **450**, such as a GPS antenna/receiver is connected to processor **410** via line **455**. It will be understood that the antenna and receiver, designated by reference numeral **450**, are combined schematically for illustration, but that the antenna and receiver may be separately located components, and that the antenna may be a GPS patch antenna or a helical antenna. The electronic components further include I/O ports **470** connected to processor **410** via line **475**.

FIG. **4**B is a block diagram of one embodiment for the electronic components within the hardware of FIGS. **3**A–**3**C and utilized by the GPS integrated PDA **310** according to the teachings of the present invention. The electronic components shown in FIG. **4**B include a processor **436** which is connected to the GPS antenna **414** through GPS receiver **438** via line **441**. The processor **436** interacts with an operating system (such as PalmOS; Pocket PC) that runs selected software depending on the intended use of the PDA **310**. Processor **436** is coupled with memory **442** such as RAM via line **444**, and power source **446** for powering the electronic

components of PDA **310**. The processor **436** communicates with touch sensitive display screen **426** via data line **448**.

The electronic components further include two other input sources that are connected to the processor **436**. Control buttons **428** are connected to processor **436** via line **451** and a map data cartridge **433** inserted into cartridge bay **432** is connected via line **452**. A conventional serial I/O port **454** is connected to the processor **436** via line **456**. Cellular antenna **416** is connected to cellular transceiver **458**, which is connected to the processor **436** via line **466**. Processor **436** is connected to the speaker/headphone jack **434** via line **462**. The PDA **310** may also include an infrared port (not shown) coupled to the processor **436** that may be used to beam information from one PDA to another.

As will be understood by one of ordinary skill in the art, the electronic components shown in FIGS. **4**A and **4**B are powered by a power source in a conventional manner. As will be understood by one of ordinary skill in the art, different configurations of the components shown in FIGS. **4**A and **4**B are considered within the scope of the present invention. For example, in one embodiment, the components shown in FIGS. **4**A and **4**B are in communication with one another via wireless connections and the like. Thus, the scope of the navigation device of the present invention includes a portable electronic navigational aid device.

According to the teachings of the present invention, the electronic components embodied in FIGS. **4**A and **4**B are adapted to provide an electronic navigational aid device with forced layer switching capabilities for a more efficient use of RAM and other resources regardless of the amount of memory available. In particular, one of ordinary skill in the art will understand upon reading this disclosure, that the invention is necessary to achieve efficiency and the most accurate results for finding a path, or solution, between two locations in a network in device implementations having limited memory, e.g. devices having a memory size of 512 kilobytes or less. In the invention, the processor is adapted to communicate with the memory. According to the teachings of the present invention, the processor operates on a novel algorithm which makes more efficient use of RAM and can quickly obtain a best or reasonably best path between two locations. The memory contains cartographic data including any number of locations and data indicative of thoroughfares of a plurality of types connecting certain ones of the locations. In memory, the plurality of types of thoroughfares are contained in a data structure organized in a hierarchy of detail levels, or layers. The processor operates on the novel route calculation algorithm to find a path, or convergence, between any two of the number of locations. Additionally, according to the teachings of the present invention, the route calculation algorithm forces switching between different levels in the hierarchy of detail levels based on a set of criteria.

According to one embodiment of the present invention, the set of criteria includes; a number of jump segments requirement, a distance requirement, a minimum memory usage requirement, a maximum memory usage requirement, and an at least one jump segment requirement. In the invention, the set of criteria are independently variable in order to tailor an aggressiveness with which the route calculation algorithm forces switching between different levels in the hierarchy of detail levels.

In one embodiment, the hierarchy of detail levels includes a hierarchy of ever-decreasing detail levels such that a lowest level includes the greatest amount of detail. However, the invention is not so limited and one of ordinary skill in the art will understand upon reading and comprehending this disclosure that a hierarchy of ever-increasing detail levels such that the highest level includes the greatest amount of detail, or any other suitable hierarchy of detail levels, can be suited to the present invention.

In one embodiment, the presence of a type of thoroughfare in any given layer of the hierarchy of detail layers is determined by a traversability of the thoroughfare. For example, the traversability of the thoroughfare can be determined by the driveability of a road. Herein, the driveability of the road may be determined by the classification of the road, a speed classification of the road, a driving history on the road, and the like. However, the invention is not so limited and one of ordinary skill in the art will understand upon reading and comprehending this disclosure, that other criteria for determining the presence of a type of thoroughfare in any given layer of the hierarchy can be suited to the present invention.

As shown in FIGS. **4**A and **4**B, the device further includes a display **440** in communication with the processor **410** and the memory **430**. The display **440** is adapted to display all or part of a "convergence" and/or a "solution," as the terms have been described herein, between any two of the number of locations. According to the teachings of the present invention, the device incorporates these and other functions as will be explained in more detail below in connection with FIGS. **6**–**9**.

FIG. **5** is a block diagram of an embodiment of a navigation system which can be adapted to the teachings of the present invention. The navigation system includes a server **502**. According to one embodiment, the server **502** includes a processor **504** operably coupled to memory **506**, and further includes a transmitter **508** and a receiver **510** to send and receive data, communication, and/or other propagated signals. The transmitter **508** and receiver **510** are selected or designed according to the communication requirements and the communication technology used in the communication design for the navigation system. The functions of the transmitter **508** and the receiver **510** may be combined into a single transceiver.

The navigation system further includes a mass data storage **512** coupled to the server **502** via communication link **514**. The mass data storage **512** contains a store of navigation data. One of ordinary skill in the art will understand, upon reading and comprehending this disclosure, that the mass data storage **512** can be separate device from the server **502** or can be incorporated into the server **502**.

In one embodiment of the present invention, the navigation system further includes a navigation device **516** adapted to communicate with the server **502** through the communication channel **518**. According to one embodiment, the navigation device **516** includes a processor and memory, as previously shown and described with respect to the block diagrams of FIGS. **4**A and **4**B. Furthermore, the navigation device **516** includes a transmitter **520** and receiver **522** to send and receive communication signals through the communication channel **518**. The transmitter **520** and receiver **522** are selected or designed according to the communication requirements and the communication technology used in the communication design for the navigation system. The functions of the transmitter **520** and receiver **522** may be combined into a single transceiver.

Software stored in the server memory **506** provides instructions for the processor **504** and allows the server **502** to provide services to the navigation device **516**. One service provided by the server **502** involves processing requests from the navigation device **516** and transmitting navigation data from the mass data storage **512** to the navigation device

516. According to one embodiment, another service provided by the server **502** includes processing the navigation data using various algorithms for a desired application, and sending the results of these calculations to the navigation device **516**.

The communication channel **518** is the propagating medium or path that connects the navigation device **516** and the server **502**. According to one embodiment, both the server **502** and the navigation device **516** include a transmitter for transmitting data through the communication channel and a receiver for receiving data that has been transmitted through the communication channel.

The communication channel **518** is not limited to a particular communication technology. Additionally, the communication channel **518** is not limited to a single communication technology; that is, the channel **518** may include several communication links that use a variety of technology. For example, according to various embodiments, the communication channel is adapted to provide a path for electrical, optical, and/or electromagnetic communications. As such, the communication channel includes, but is not limited to, one or a combination of the following: electrical circuits, electrical conductors such as wires and coaxial cables, fiber optic cables, converters, radio-frequency (RF) waveguides, the atmosphere, and empty space. Furthermore, according to various embodiments, the communication channel includes intermediate devices such as routers, repeaters, buffers, transmitters, and receivers, for example.

In one embodiment, for example, the communication channel **518** includes telephone and computer networks. Furthermore, in various embodiments, the communication channel **516** is capable of accommodating wireless communication such as radio frequency, microwave frequency and infrared communication, and the like. Additionally, according to various embodiments, the communication channel **516** accommodates satellite communication.

The communication signals transmitted through the communication channel **518** include such signals as may be required or desired for a given communication technology. For example, the signals may be adapted to be used in cellular communication technology, such as time division multiple access (TDMA), frequency division multiple access (FDMA), code division multiple access (CDMA), global system for mobile communications (GSM), and the like. Both digital and analog signals may be transmitted through the communication channel **518**. According to various embodiments, these signals are modulated, encrypted and/or compressed signals as may be desirable for the communication technology.

The mass data storage includes sufficient memory for the desired navigation application. Examples of mass data storage include magnetic data storage media such as hard drives, optical data storage media such as CD ROMs, charge storing data storage media such as Flash memory, and molecular memory, such as now known or hereinafter developed.

According to one embodiment of the navigation system, the **502** server includes a remote server accessed by the navigation device **516** through a wireless channel. According to other embodiments of the navigation system, the server **502** includes a network server located on a local area network (LAN), wide area network (WAN), a virtual private network (VPN) and server farms.

According to another embodiment of the navigation system, the server **502** includes a personal computer such as a desktop or laptop computer. In one embodiment, the communication channel **518** is a cable connected between the personal computer and the navigation device. According to one embodiment, the communication channel **518** is a wireless connection between the personal computer and the navigation device **516**.

FIG. **5** presents yet another embodiment for a collective set of electronic components adapted to the present invention. As one of ordinary skill in the art will understand upon reading and comprehending this disclosure, the navigation system of FIG. **5** is adapted to the present invention in a manner distinguishable from that described and explained in detail in connection with FIGS. **4**A and **4**B.

That is, the navigational system **500** of FIG. **5** is likewise adapted to provide an electronic navigational aid device **516** with forced layer switching capabilities for a more efficient use of RAM and other resources regardless of the amount of memory available. Thus, in one embodiment the server **502** includes a memory having a memory size of 2 megabytes or more. In the invention, the processor **504** is adapted to communicate with the memory **506**. According to the teachings of the present invention, the processor **504** operates on a novel algorithm which makes more efficient use of the server's RAM **506** and can quickly obtain a best or reasonably best path between two locations. The server **502** processes the novel algorithm in conjunction with the cartographic data including any number of locations and data indicative of thoroughfares of a plurality of types connecting certain ones of the locations as stored in memory **506**. In memory **506**, the plurality of types of thoroughfares are contained in a data structure organized in a hierarchy of detail levels, or layers. The processor **504** operates on the novel route calculation algorithm to find a path, or convergence, between any two of the number of locations. Additionally, according to the teachings of the present invention, the route calculation algorithm forces switching between different levels in the hierarchy of detail levels based on a set of criteria.

As described in connection with FIGS. **4**A and **4**B, the set of criteria includes; a number of jump segments requirement, a distance requirement, a minimum memory usage requirement, a maximum memory usage requirement, and an at least one jump segment requirement. In the invention and as will be explained in more detail below, the set of criteria are independently variable in order to tailor an aggressiveness with which the route calculation algorithm forces switching between different levels in the hierarchy of detail levels.

The system can further operate on signals, e.g. GPS signals, originally received by the navigational device **516**. Similar to the navigational device of FIGS. **4**A and **4**B, the navigation device **516** in system **500** is outfitted with a display **524** and GPS capabilities **526**. As one of ordinary skill in the art will understand upon reading and comprehending this disclosure, a user of the navigation device **516** can be proximate to or accompanying the navigation device **516**. The invention however, is not so limited. The features and functionality explained and described in detail above in connection with the device of FIGS. **4**A and **4**B are likewise available in the system **500** of FIG. **5**.

FIG. **6** is a flow diagram of one embodiment of a navigation aid method according to the teachings of the present invention. The navigation aid method includes a method for forced layer switching within a navigation device or navigation system as described and explained in detail above in connection with FIGS. **4**A, **4**B and **5**. And, as described above, a processor is used for processing signals which include input data from input devices, e.g. keypads, other input keys, or other inputs, GPS signals from

GPS components, and data received from I/O ports in order to perform the methods described herein. As shown in FIG. **6**, the navigation aid method for performing forced layer switching includes organizing in memory data indicative of thoroughfares of a plurality of types according to a hierarchy of detail layers at block **610**. The thoroughfares of the plurality of types connect a number of locations. In one embodiment, organizing in memory data indicative of thoroughfares of a plurality of types according to a hierarchy of detail layers includes organizing the thoroughfares of a plurality of types by a traversability of the thoroughfare. By way of example, and not by way of limitation, a traversablity of a thoroughfare can be determined by the thoroughfare's type, e.g. interstate road, residential road, etc., the speed classification of the thoroughfare, and other suitable factors.

A novel route calculation algorithm is used at block **620** to find a convergence between any two of the number of locations. According to the teachings of the present invention, using the route calculation algorithm includes forcing layer switching to another layer in the hierarchy of detail layers by assigning a set of criteria to the algorithm as shown in block **630**. As one of ordinary skill in the art will understand upon reading this disclosure, the methods performed in block **620** and **630** can be performed simultaneously or in a different order from that shown in FIG. **6**. The set of criteria includes a maximum memory usage requirement and an at least one jump segment. That is, a maximum memory allowance is allocated per layer and the algorithm forces switching to another layer in the hierarchy when the maximum memory allowance for a given layer has been utilized.

In one embodiment, organizing in memory data indicative of thoroughfares of a plurality of types according to a hierarchy of detail layers includes organizing the thoroughfares of a plurality of types by layers ever-decreasing detail such that a lowest layer includes the greatest amount of detail. One embodiment includes assigning a maximum memory usage requirement for the lowest layer equal to or less than 35% of available space on the memory.

In one embodiment of the invention, assigning a set of criteria to the algorithm further includes assigning the following set of criteria; a number of jump segments requirement, a distance requirement, and a minimum memory usage requirement. According to the teachings of the present invention, the set of criteria are independently variable at each layer in the hierarchy of detail layers. Thus, in one embodiment, the minimum memory usage requirement at a greatest layer of detail in the hierarchy of detail layers is at least 2% of available space on the memory.

As will be understood by one of ordinary skill in the art upon reading and comprehending this disclosure, the method of the invention includes a computer-accessible medium having executable instructions stored thereon capable of directing a processor to perform the inventive method.

FIG. **7** is a flow diagram of another embodiment of a navigation aid method according to the teachings of the present invention. The navigation aid method includes a method for forced layer switching for more efficient use of available RAM within a navigation device or navigation system as described and explained in detail above in connection with FIGS. **4**A, **4**B, and **5**. And, as described above, a processor is used for processing signals which include input data from user input devices, e.g. keypads or other input keys, GPS signals from GPS device/system components, and data received from I/O ports in order to perform the methods described herein.

As shown in the embodiment of FIG. **7**, the navigation aid method for forced layer switching includes beginning at a first node location and evaluating a number of adjacent nodes for a convergence between a first node location and a second node location as shown at block **710**. As one of ordinary skill in the art will understand upon reading this disclosure, in one embodiment, the first node location can include a starting point location and the second node location can represent a destination or target location. However, the invention is not so limited. For example, the second node does not have be a destination location. Also, in other embodiments the method does not have to begin or end at a node. Instead, the method can include beginning at any device location and terminating at any desired device destination such as at a particular street address along a thoroughfare or even at a particular geographical feature such as a lake or golf course, or other point of interest. The method includes using a data structure indicative of thoroughfares of a plurality of types organized according to a hierarchy of detail layers with data indicative of where in the network that layer switching can be accomplished. The method further includes using a memory containing any number of cartographic locations, such as street addresses, geographical features (e.g. lakes & golf courses), points of interest and node locations which can be connected by the thoroughfares of the plurality of types.

As shown in block **720**, simultaneous with evaluating a number of adjacent nodes beginning at a first node location, the method includes beginning at the second node location and evaluating a number of adjacent nodes thereto for a convergence between a first node location and a second node location. In block **730**, the method proceed to evaluate a next adjacent node for each of the previously evaluated adjacent nodes. In block **740**, the method continues by maintaining a list of nodes having a jump segment to a next layer in the hierarchy of detail layers and by maintaining a running total of nodes explored from a given jump segment node a next adjacent node. As used herein, the term jump segment is intended to mean any link, path, or node at which the algorithm can switch to another layer in the hierarchy of detail layers and still proceed with executing the convergence.

In block **750**, the method continues by forcing or preventing a layer switch in the hierarchical data structure being operated on by the novel algorithm based on a set of criteria.

According to the teachings of the present invention, forcing a layer switch in the hierarchy of detail layers based on a set of criteria includes forcing a layer switch when at least one jump segment has been found and a maximum memory allowance has been utilized for a given layer. In the invention, the maximum memory allowance for each given layer can be independently varied in order to tailor an aggressiveness which a route algorithm forces switching between different levels, or layers in the hierarchy of detail layers. For instance, in a given layer the maximum memory allowance for the layer can be reduced in order to increase the algorithms affinity for switching, moving or jumping to another layer in the hierarchy of detail layers.

According to the teachings of the present invention, preventing a layer switch in the hierarchy of detail layers includes doing so until a requisite number of jump segments have been found in combination with a requisite number in the running total of nodes explored from a given jump segment node, a minimum distance from a node location has been explored, and a minimum memory space has been utilized for a given layer.

As one of ordinary skill in the art will understand upon reading and comprehending this disclosure, forcing a layer switch based on the above set of criteria preempts preventing a layer switch. Further, the requisite number of jump segments in combination with a requisite number in the running total of nodes explored from a given jump segment node, the minimum distance from a node location that has been explored, and the minimum memory space utilization are all independently variable for each given layer in order to increase or decrease the algorithms affinity for switching, moving or jumping to another layer in the hierarchy of detail layers.

In one embodiment, and as illustrated more in the table provided in FIG. **8**, each given layer includes a number of alternatives for the requisite number of jump segments and requisite number in the running total of nodes explored from a given jump segment node combinations which can satisfy a switching threshold requirement. In one embodiment of the invention, the method further includes selecting a solution from a number of convergences between the first node location and the second node location. That is, in one embodiment, if a number of solutions have been found for a convergence between a first location and a second location, then other sets of criteria can be used to select from among the number of solutions. By way of example, and not by way of limitation, one from within a number of solutions can be chosen based on a set of criteria which includes; a shortest path or route between the two locations, a fastest travel time between the two locations, a preferred thoroughfare type or speed classification, and other suitable criteria of the like.

FIG. **8** provides a table which is useful for understanding one embodiment of the different set of criteria used to force or to prevent layer switching according to the teachings of the present invention. As one of ordinary skill in the art will appreciate upon reading and understanding this disclosure, Table 8 is but one embodiment of the per layer, dynamically configurable criteria. The invention is not so limited to the criteria expressed in Table 8.

FIG. **8** illustrates a number of rows and columns. The rows in FIG. **8** identify the different levels of detail in a data structure organized according to hierarchical levels, or layers of detail. In the embodiment shown in FIG. **8**, level 0 represents the lowest layer, or level, which in this embodiment includes the greatest amount of detail. That is, for roadways, level 0 will contain all interstates, all residential roads, and essentially every thoroughfare.

The columns in FIG. **8** are identified as columns **(1)**–**(6)**. Columns **(1)**–**(3)** are each broken into subsets (A,B). In each of these columns, subset A represents a minimum number of jump segments and column B represents a minimum number of nodes which must be explored from a given jump segment node to satisfy a switching threshold requirement. Thus, columns **(1)**–**(3)** illustrate that, according to the teachings of the present invention, each given layer includes a number of alternatives for the requisite number of jump segments and requisite number in the running total of nodes explored from a given jump segment node combinations which can satisfy a switching threshold requirement. And, any one of the alternatives can serve to fulfill the switching threshold requirement. Again, according to the teachings of the present invention, these are variable on a per layer basis to suit a particular design rule or device implementation. The invention is not so limited to the representation shown in FIG. **8**. That is, as one of ordinary skill in the art will understand upon reading this disclosure, the values represented in FIG. **8** can be varied in order to tailor an aggressiveness with which a route algorithm forces or prevents switching between different levels, or layers in the hierarchy of detail layers. For instance, in a given layer the maximum memory allowance for the layer can be reduced or increased in order to increase or decrease the algorithms affinity for switching, moving or jumping to another layer in the hierarchy of detail layers.

Column **(4)** represents the minimum distance requirement for each layer, expressed in kilometers. Column **(5)** represents a maximum memory allowance for each given layer, expressed as a percentage of the total available memory space used at that point in the algorithm's execution. Column **(6)** represents a minimum memory usage requirement on a per layer basis, expressed as a percentage of the total available memory space used at that point in the algorithm's execution.

Thus, by way of example, and not by way of limitation, the following represents one set of criteria, or rules which the novel algorithm of the present invention will employ in determining whether to force or prevent a layer switch from route level 0 to route level 1. That is, for the embodiment shown in FIG. **8**, the following route level switch threshold criteria must be satisfied to force or permit a switch from level 0 to level 1. In this example, two manner are described which can satisfy the switch threshold criteria.

According to the teachings of the present invention, a first manner to satisfy the switch threshold criteria includes meeting three requirements. The first requirement in this embodiment option includes a number of alternatives for the requisite number of jump segments and requisite number in the running total of nodes explored from a given jump segment node combinations. One alternative includes finding at least 1 jump segment and exploring at least 25 additional nodes after finding that jump segment. A second alternative includes finding at least 2 jump segments and exploring at least 15 additional nodes after finding the second jump segment. A third alternative includes finding at least 6 jump segments. Again, these expressed numbers, or criteria are variable in the invention, and the same is not limited to those numbers provided above.

The second requirement of the first manner to satisfy the switch threshold criteria relates to a distance travel. Thus, in this example the second requirement is that a distance of at least 3 kilometers be traveled before the layer switch. The third requirement of the first manner to satisfy the switch threshold criteria relates to the minimum percentage of memory space which must be used. Thus, in this example the third requirement is that at least 3% of the memory space be used.

The second manner to satisfy the switch threshold criteria involves on two requirements. The first being that at least one jump segment, or switch location, has been found and the second being that the maximum memory usage allowance for this level has been surpassed, e.g. in this example that 35% of memory space has been utilized.

FIG. **9** illustrates yet another flow diagram embodiment for a navigation aid method according to the teachings of the present invention. As shown in FIG. **9**, the method includes determining in block **910** whether a current jump and distance criteria for a given routing level has been met. If the answer is yes, or true, the method proceeds to block **920** and determines whether a minimum percentage of memory space has been used at this routing level. If the answer is yes, then the method proceeds to block **930** and the routing level is increased. Alternatively if the answer is no, or false, then the method proceeds to block **960** to continue executing the novel algorithm on the current level in search of a convergence between two points or locations.

Back in block **910**, when the answer is no, the method proceeds to block **940**. In block **940** the algorithm determines whether a maximum percentage of memory space, or maximum memory usage allowance for the given level has been utilized. If the answer is yes, then the method proceeds to block **950** and the algorithm determines whether at least one jump segment has been found. If the answer is yes, then the method proceeds to block **930** and the routing level is increased. Alternatively if the answer is no, or false, then the method proceeds to block **960** to continue executing the novel algorithm on the current level in search of at least one jump segment has been found. Further, if the answer in block **940** is no, then the method proceeds to block **960** to continue executing the algorithm on the current level in search of a convergence between two points or locations.

In some embodiments, the methods provided above are implemented as a computer data signal embodied in a carrier wave or propagated signal, that represents a sequence of instructions which, when executed by a processor such as processor **410** in FIG. **4**A, processor **436** in FIG. **4**B, or processor **504** in FIG. **5**, cause the processor to perform the respective method. In other embodiments, methods provided above are implemented as a set of instructions contained on a computer-accessible medium, such as memory **430** in FIG. **4**A, memory **442** in FIG. **4**B or mass storage device **512** in FIG. **5**, capable of directing a processor, such as processor **410** in FIG. **4**A, processor **436** in FIG. **4**B or processor **504** in FIG. **5**, to perform the respective method. In varying embodiments, the medium is a magnetic medium, an electronic medium, or an optical medium.

As one of ordinary skill in the art will understand upon reading this disclosure, the electronic components of device shown in FIGS. **4**A and **4**B, and components of the system **500** shown in FIG. **5** can be embodied as computer hardware circuitry or as a computer-readable program, or a combination of both. In another embodiment, system **500** is implemented in an application service provider (ASP) system.

The system of the present invention includes software operative on a processor to perform methods according to the teachings of the present invention. One of ordinary skill in the art will understand, upon reading and comprehending this disclosure, the manner in which a software program can be launched from a computer readable medium in a computer based system to execute the functions defined in the software program. One of ordinary skill in the art will further understand the various programming languages which may be employed to create a software program designed to implement and perform the methods of the present invention. The programs can be structured in an object-orientation using an object-oriented language such as Java, Smalltalk or C++, and the programs can be structured in a procedural-orientation using a procedural language such as COBOL or C. The software components communicate in any of a number of means that are well-known to those skilled in the art, such as application program interfaces (A.P.I.) or interprocess communication techniques such as remote procedure call (R.P.C.), common object request broker architecture (CORBA), Component Object Model (COM), Distributed Component Object Model (DCOM), Distributed System Object Model (DSOM) and Remote Method Invocation (RMI). However, as will be appreciated by one of ordinary skill in the art upon reading this disclosure, the teachings of the present invention are not limited to a particular programming language or environment.

CONCLUSION

The above systems, devices and methods have been described, by way of example and not by way of limitation, with respect to improving efficiency, speed and ease of user interaction with a navigation device. That is, the systems, devices and methods provide for a navigational route planning device which is more efficient and accurate than current low cost systems, without requiring the more expensive system resources. The systems and methods of the present invention offer an improved navigational route planning device which provides a more efficient use of RAM and other resources in connection with a route calculation algorithm which quickly obtains a best or reasonable best path between two locations.

Although specific embodiments have been illustrated and described herein, it will be appreciated by those of ordinary skill in the art that any arrangement which is calculated to achieve the same purpose may be substituted for the specific embodiment shown. This application is intended to cover any adaptations or variations of the present invention. It is to be understood that the above description is intended to be illustrative, and not restrictive. Combinations of the above embodiments, and other embodiments will be apparent to those of skill in the art upon reviewing the above description. The scope of the invention includes any other applications in which the above systems, devices and methods are used. The scope of the invention should be determined with reference to the appended claims, along with the full scope of equivalents to which such claims are entitled.

What is claimed is:

1. A navigation system comprising:

a server operable to calculate a route between a first location and a second location, the server including a server processor, wherein the server processor operates on a route calculation algorithm to determine the route between the first location and the second location; and

a navigation device operable to transmit the locations to the server and receive the route from the server over a communications link, the device including

a housing,

a device processor within the housing,

a device memory within the housing and in communication with the device processor, the device memory being operable to store the route,

a display within the housing and operably coupled to the device processor, the display viewable at a front face of the housing, and

an integrated global position system (GPS) receiver within the housing and operably coupled to the device processor and having an antenna located above the display within the housing.

2. The system as set forth in claim **1**, the server further including a server memory in communication with the server processor and having cartographic data including a plurality of locations.

3. The system as set forth in claim **2**, the server memory further having data indicative of thoroughfares of a plurality of types connecting certain ones of the locations.

4. The system as set forth in claim **3**, wherein the plurality of types of thoroughfares are organized in a number of detail levels.

5. The system as set forth in claim **1**, the device further including a cellular transceiver within the housing and operably coupled to the device processor and located within the housing.

6. The system as set forth in claim 5, wherein the transceiver transmits the locations to the server and receives the route from the server.

7. The system as set forth in claim 1, wherein the display displays the route.

8. The system as set forth in claim 1, wherein GPS receiver receives signals from a plurality of GPS satellites and the second processor determines the first location from the signals.

9. The system as set forth in claim 1, the device further including an input for receiving the second location from a user.

10. A navigation system comprising:

a server operable to calculate a route between a first location and a second location, the server including

a server processor,

a server memory in communication with the server processor, the server memory having cartographic data including a plurality of locations and data indicative of thoroughfares of a plurality of types connecting certain ones of the locations,

wherein the plurality of types of thoroughfares are organized in a number of detail levels, and

wherein the server processor operates on a route calculation algorithm to determine the route between the first location and the second location; and

a navigation device operable to transmit the locations to the server and receive the route from the server over a communications link, the device including

a housing,

a device processor within the housing,

a device memory within the housing and in communication with the device processor, the device memory being operable to store the route,

a display within the housing and operably coupled to the device processor, the display viewable at a front face of the housing,

an integrated global position system (GPS) receiver within the housing and operably coupled to the device processor and having an antenna located above the display within the housing, and

a cellular transceiver within the housing and operably coupled to the device processor and located within the housing.

11. The system as set forth in claim 10, wherein the display displays the route.

12. The system as set forth in claim 10, wherein the transceiver transmits the locations to the server and receives the route from the server.

13. The system as set forth in claim 10, wherein GPS receiver receives signals from a plurality of GPS satellites and the device processor determines the first location from the signals.

14. The system as set forth in claim 10, the device further including an input for receiving the second location from a user.

15. A navigation system comprising:

a server operable to calculate a route between a first location and a second location, the server including

a server processor,

a server memory in communication with the server processor, the server memory having cartographic data including a plurality of locations and data indicative of thoroughfares of a plurality of types connecting certain ones of the locations,

wherein the plurality of types of thoroughfares are organized in a number of detail levels, and

wherein the server processor operates on a route calculation algorithm to determine the route between the first location and the second location; and

a navigation device operable to transmit the locations to the server and receive the route from the server over a communications link, the device including

a housing,

a device processor within the housing,

a device memory within the housing and in communication with the device processor, the device memory being operable to store the route,

a display within the housing and operably coupled to the device processor for displaying the route, the display viewable at a front face of the housing,

an integrated global position system (GPS) receiver within the housing and operably coupled to the device processor and having an antenna located above the display within the housing, wherein GPS receiver receives signals from a plurality of GPS satellites and the device processor determines the first location from the signals,

an input for receiving the second location from a user, and

a cellular transceiver within the housing and operably coupled to the device processor and located within the housing for transmitting the locations to the server and receiving the route from the server.

16. A navigation server for calculating a route between first and second locations and transmitting the route to a portable navigation device for navigating the route, the server comprising:

a server processor;

a server memory in communication with the server processor, the server memory having cartographic data including a plurality of locations and data indicative of thoroughfares of a plurality of types connecting certain ones of the locations;

wherein the plurality of types of thoroughfares are organized in a number of detail levels; and

wherein the server processor operates on a route calculation algorithm to determine the route between the first location and the second location.

17. The server as set forth in claim 16, wherein the server transmits the route to the device over a wireless communications network.

18. The server as set forth in claim 16, wherein the server receives the first and second locations from the device over a wireless communications network.

19. The server as set forth in claim 16, wherein the device includes

a housing;

a device processor within the housing;

a device memory within the housing and in communication with the device processor, the device memory being operable to store the route;

a display within the housing and operably coupled to the device processor for displaying the route, the display viewable at a front face of the housing;

an integrated global position system (GPS) receiver within the housing and operably coupled to the device processor and having an antenna located above the display within the housing, wherein GPS receiver receives signals from a plurality of GPS satellites and the device processor determines the first location from the signals;

an input for receiving the second location from a user; and

a cellular transceiver within the housing and operably coupled to the device processor and located within the housing for transmitting the locations to the server and receiving the route from the server.

20. The server as set forth in claim **19**, wherein the server also transmits to the device a map displaying the route.

21. A portable navigation device for navigating a route between first and second locations, the device comprising:

a housing;

a device processor within the housing;

a device memory within the housing and in communication with the device processor, the device memory being operable to store the route;

a display within the housing and operably coupled to the device processor for displaying the route, the display viewable at a front face of the housing;

an integrated global position system (GPS) receiver within the housing and operably coupled to the device processor and having an antenna located above the display within the housing, wherein GPS receiver receives signals from a plurality of GPS satellites and the device processor determines the first location from the signals;

an input for receiving the second location from a user; and

a cellular transceiver within the housing and operably coupled to the device processor and located within the housing for transmitting the locations to a server and receiving the route from the server.

22. The device as set forth in claim **21**, wherein the server receives the first and second locations from the device over a wireless communications network, calculates the route between the first and second locations, and transmits the route to the device over the network.

23. The device as set forth in claim **21**, wherein the server includes

a server processor;

a server memory in communication with the server processor, the server memory having cartographic data including a plurality of locations and data indicative of thoroughfares of a plurality of types connecting certain ones of the locations;

wherein the plurality of types of thoroughfares are organized in a number of detail levels; and

wherein the server processor operates on a route calculation algorithm to determine the route between the first and second locations.

24. The device as set forth in claim **21**, wherein the server also transmits to the device a map displaying the route.

25. The device as set forth in claim **21**, wherein the device is a personal data assistant (PDA) and the antenna is a patch antenna.

* * * * *