US 20150352325A1

(19) United States

(12) Patent Application Publication

Quick

(10) Pub. No.: US 2015/0352325 A1

(43) Pub. Date: Dec. 10, 2015

(54) **RETRACTION AND ASPIRATION DEVICE FOR TREATING EMBOLISM AND ASSOCIATED SYSTEMS AND METHODS**

(71) Applicant: **Inceptus Medical, LLC**, Aliso Viejo, CA (US)

(72) Inventor: **Richard Quick**, Mission Viejo, CA (US)

(21) Appl. No.: **14/735,110**

(22) Filed: **Jun. 9, 2015**

Related U.S. Application Data

(60) Provisional application No. 62/009,805, filed on Jun. 9, 2014.

Publication Classification

(51) **Int. Cl.**

A61M 25/01	(2006.01)
A61M 25/00	(2006.01)
A61F 2/95	(2006.01)
A61B 17/221	(2006.01)

(52) **U.S. Cl.**

CPC ***A61M 25/0122*** (2013.01); ***A61B 17/221*** (2013.01); ***A61M 25/0082*** (2013.01); ***A61F 2/95*** (2013.01); *A61M 2210/12* (2013.01); *A61M 2210/0693* (2013.01); *A61F 2002/9528* (2013.01)

(57) **ABSTRACT**

Retraction and aspiration devices, systems, and methods are disclosed herein. One aspect of the present technology, for example, is directed toward an apparatus for use with a catheter system configured to enable intravascular delivery of an interventional device to a treatment site in a blood vessel. The apparatus can include a housing configured to be releasably coupled to a proximal portion of the catheter system and an actuation mechanism coupled to the housing. The actuation mechanism can include a lever movably coupled to the housing, a locking portion configured to engage a portion of the catheter system, and a pressure source coupled to the housing and the actuation mechanism. Movement of the lever simultaneously activates the pressure source to generate pressure, and moves the locking portion to engage and retract at least a portion of the catheter system.

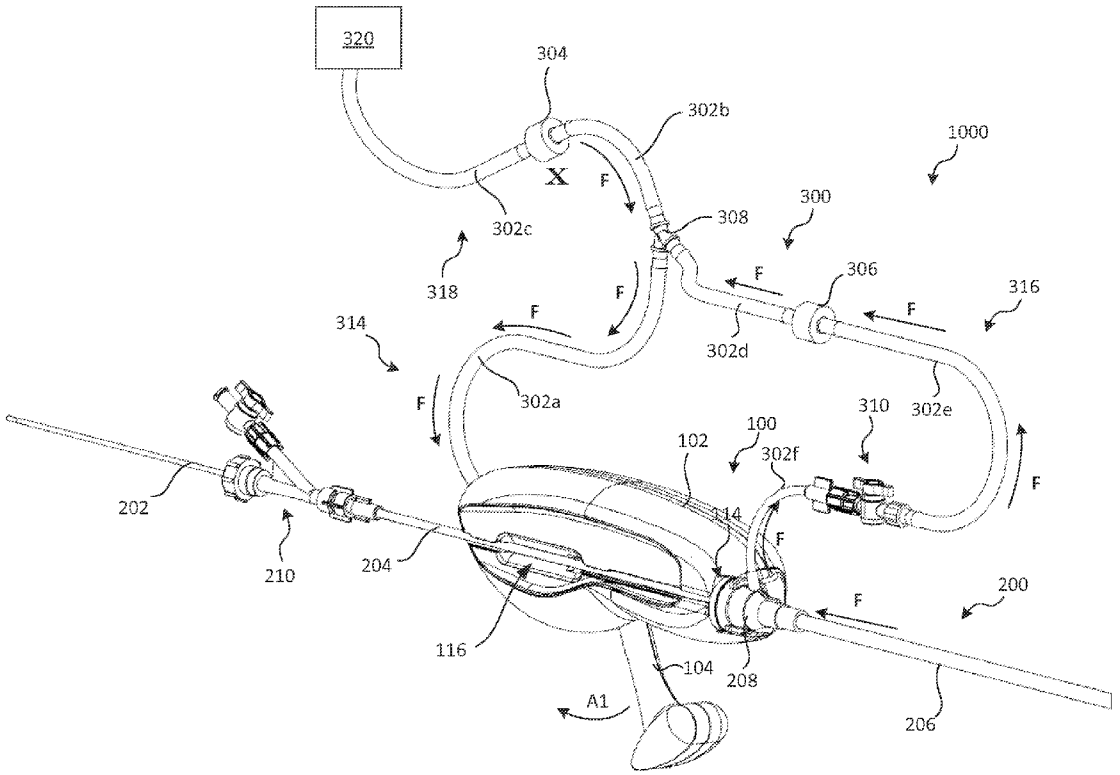

IMPERATIVE Ex. 1013
IPR Petition - US 11,744,691

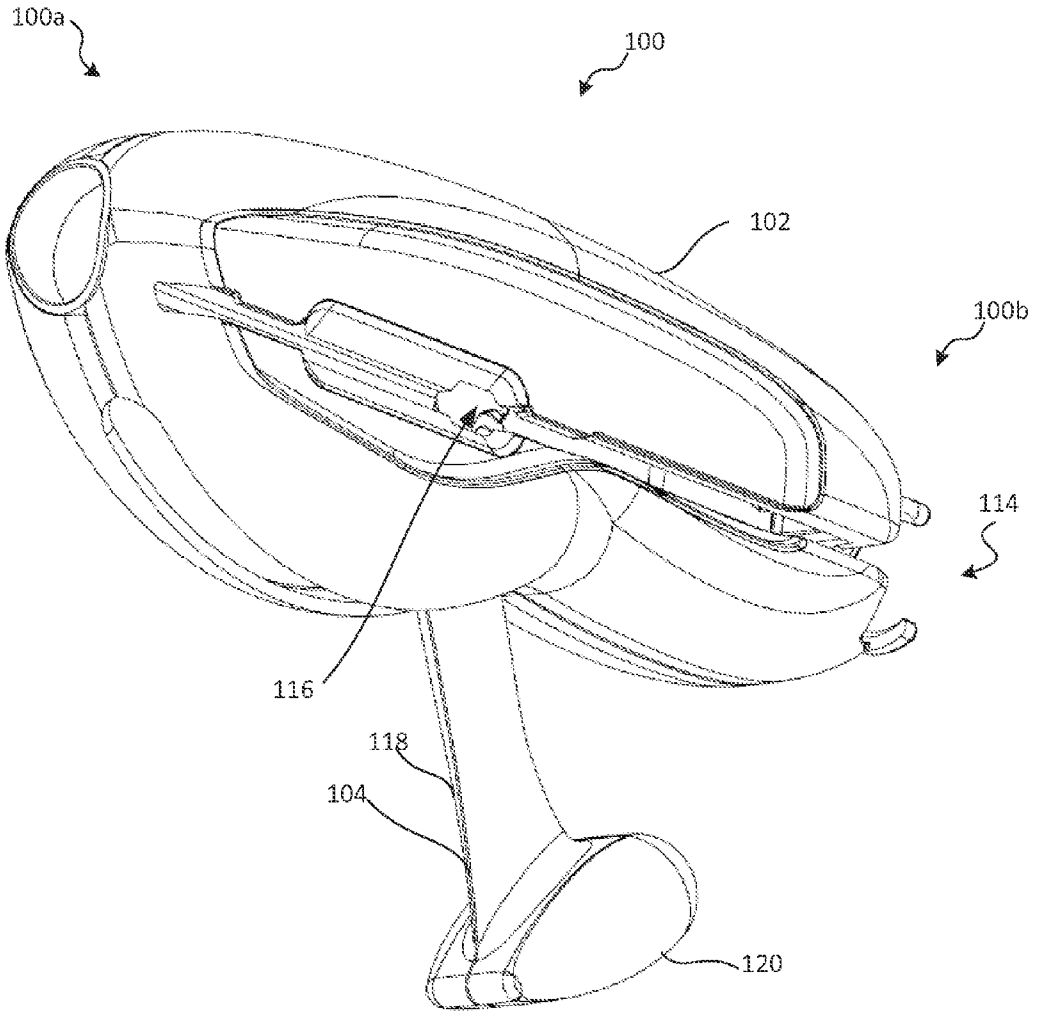

FIG. 1A

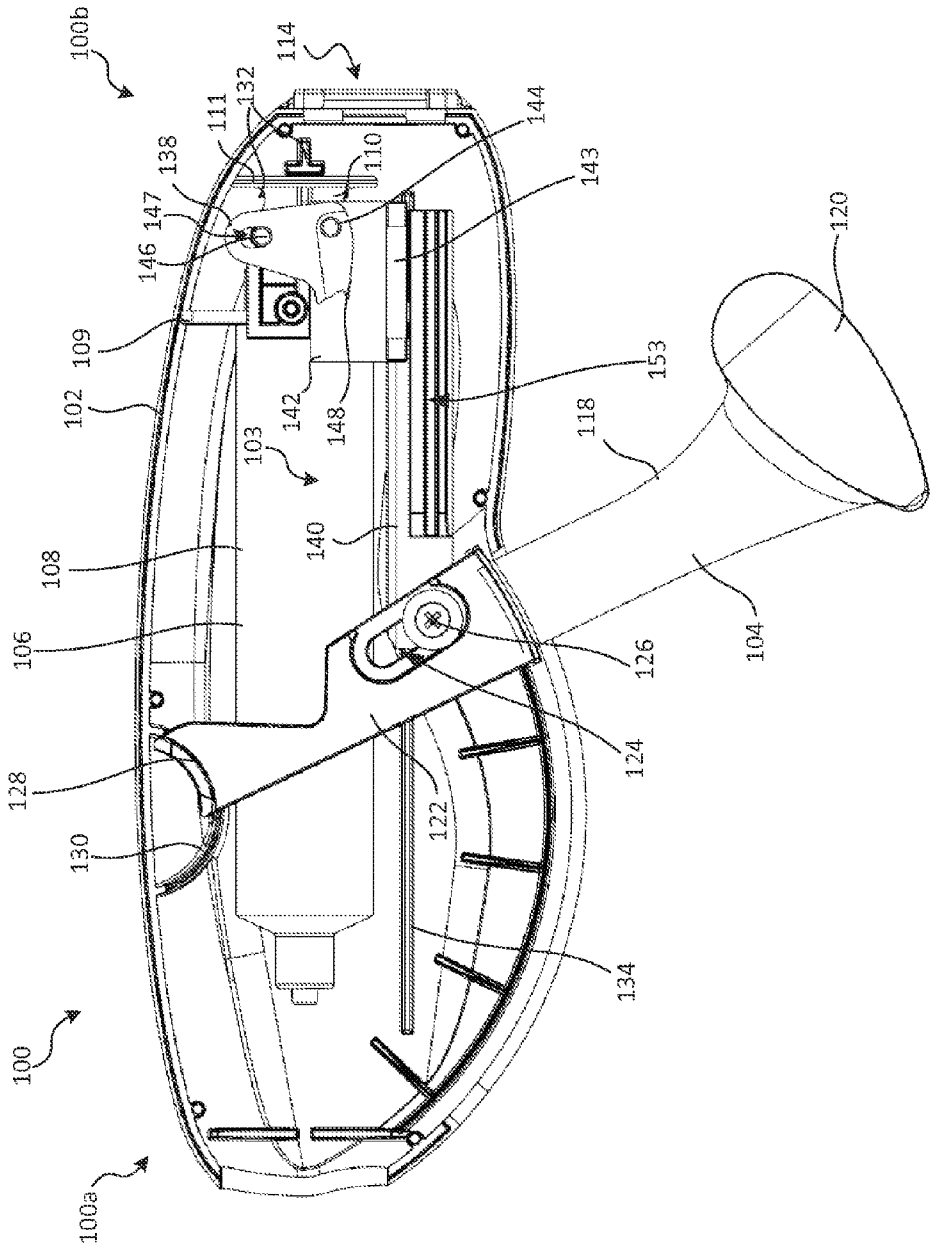
100b
114
132
111
138
147
146
109
102
108
106
128
130
100
100a
144
110
143
142
148
103
140
153
118
120
104
126
124
122
134

FIG. 1B

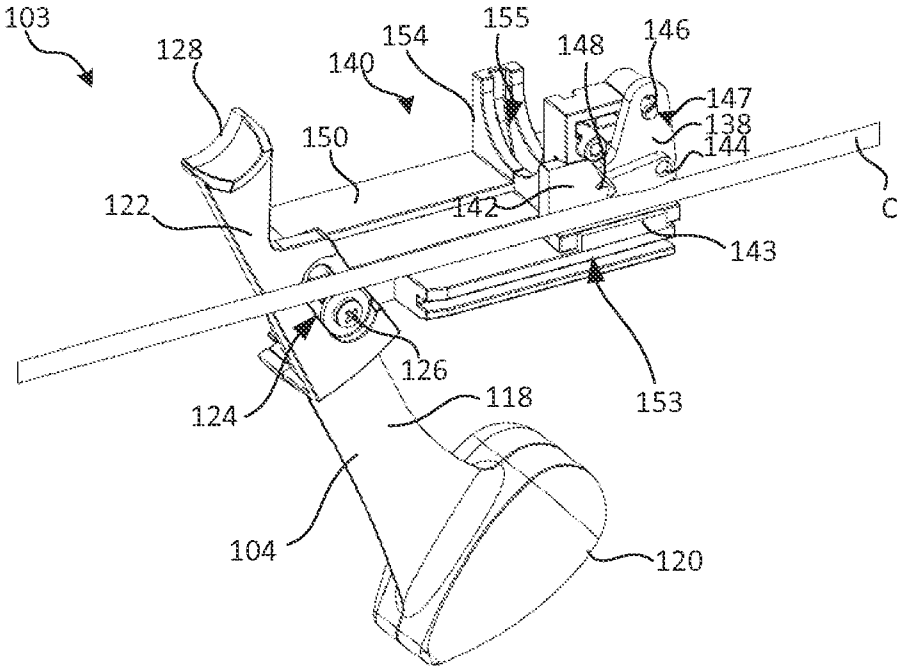
103
128
154
155
148
146
140
147
138
144
150
122
142
C
143
126
124
118
153
104
120

FIG. 2A

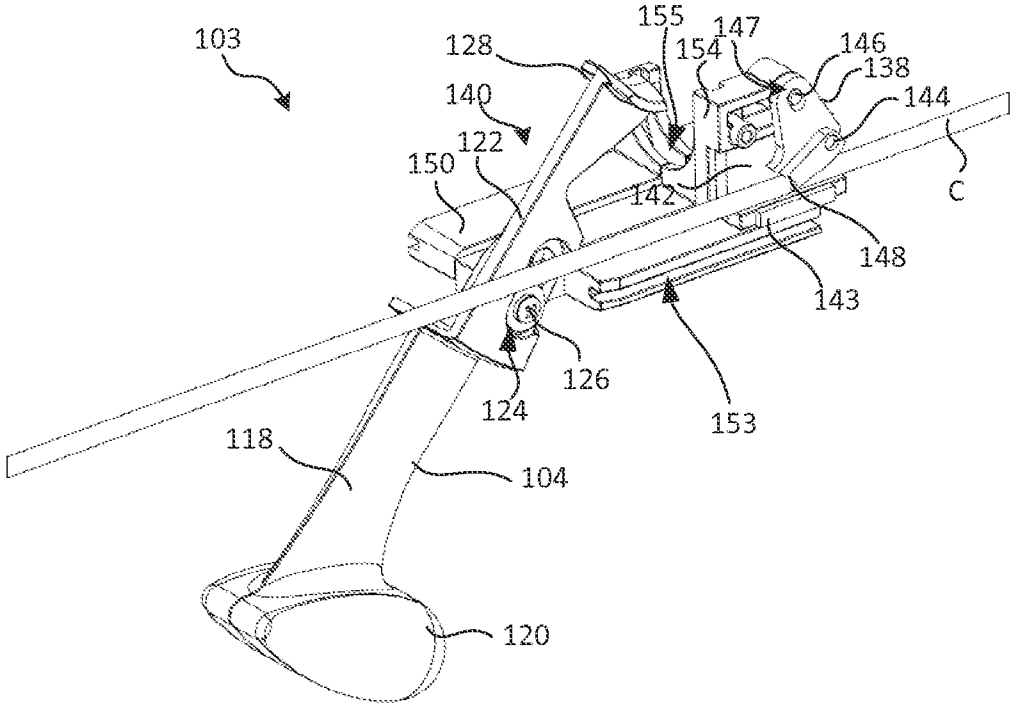
103
155
147
128
154
146
138
140
144
122
150
142
C
148
143
126
124
153
118
104
120

FIG. 2B

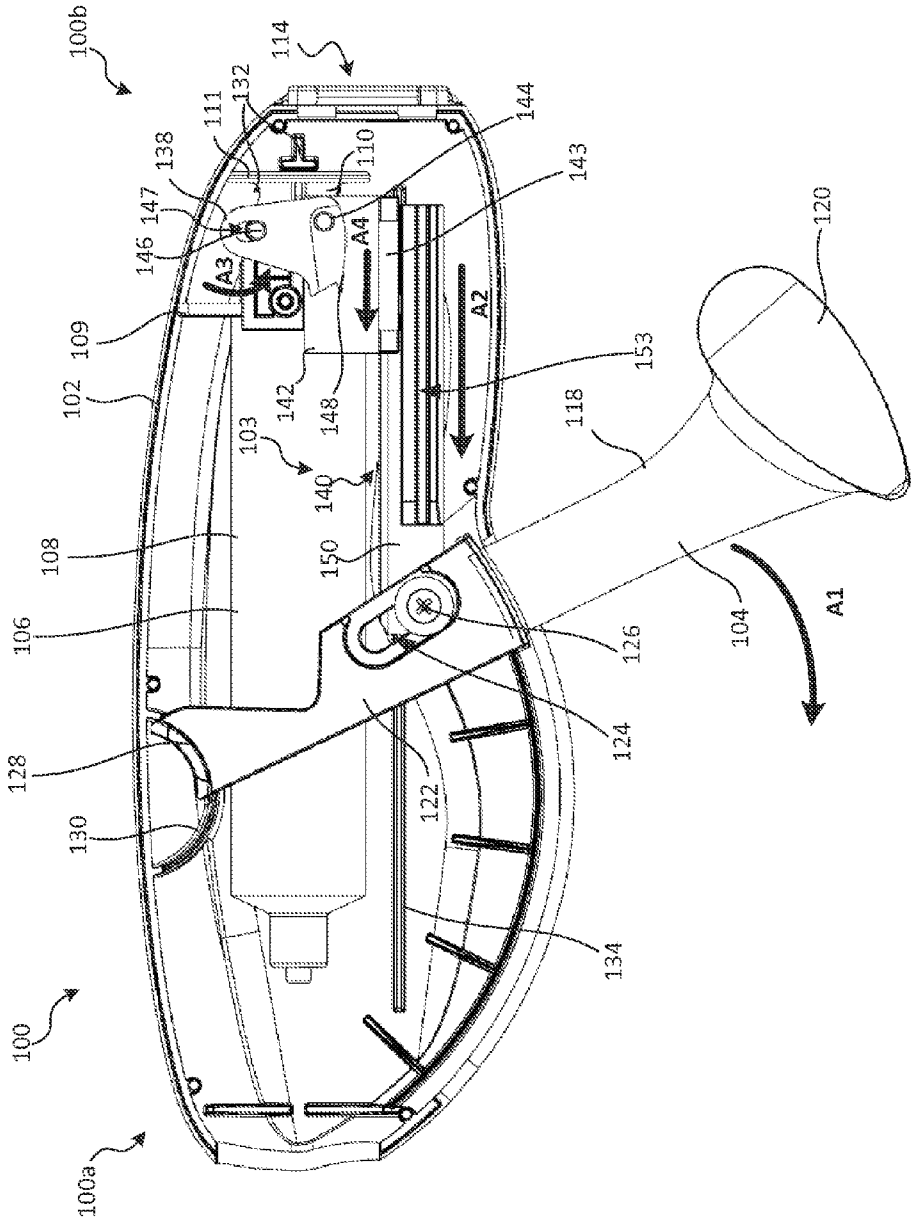
100b
114
132
111
138
147
146
110
144
143
A3
A4
A2
109
102
142
148
153
118
120
103
140
108
150
106
126
104
A1
124
128
122
130
134
100
100a

FIG. 3A

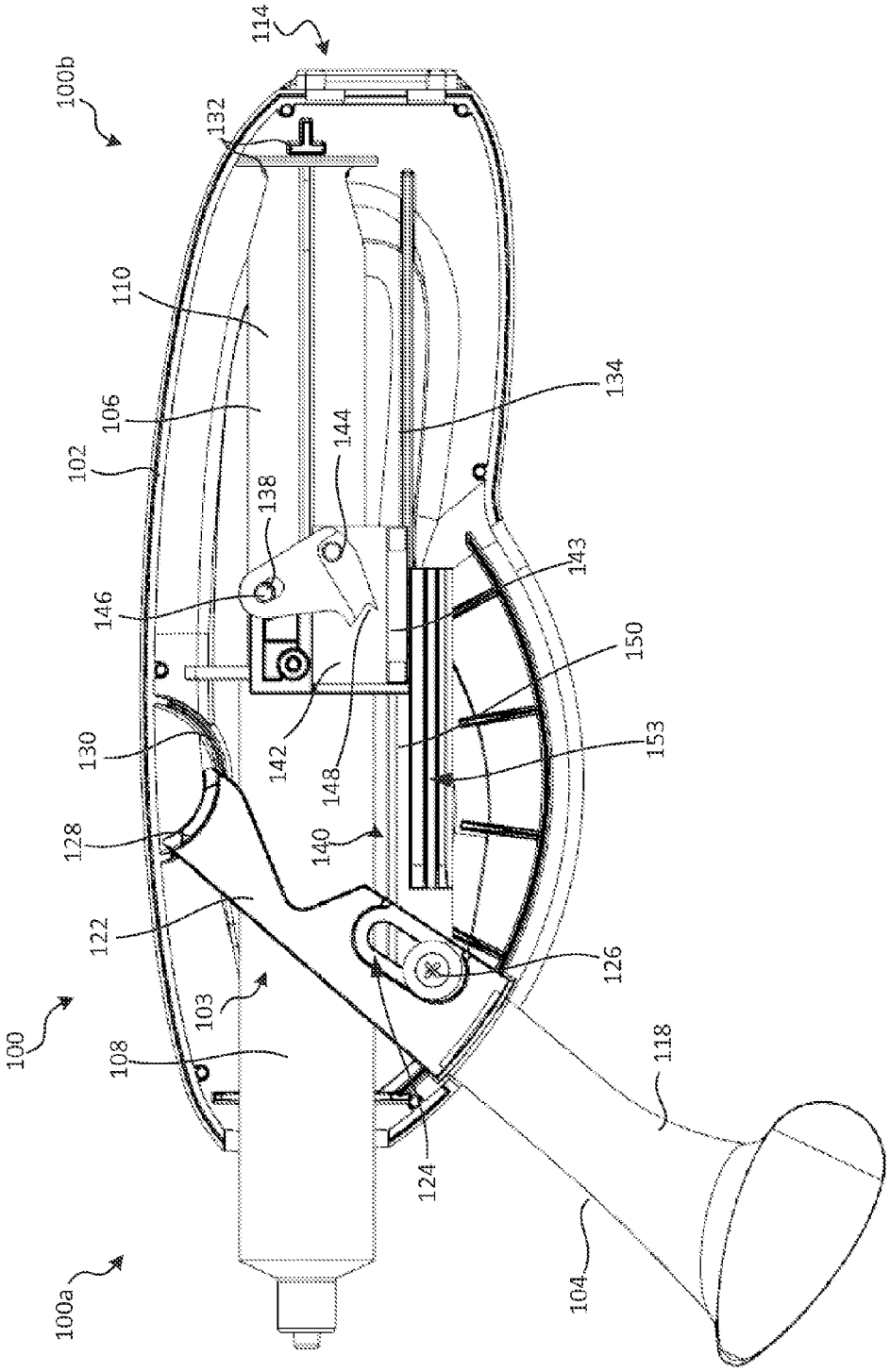
100b
114
132
110
106
102
134
144
138
146
143
150
130
142
148
153
128
140
122
126
103
100
108
118
124
104
100a

FIG. 3B

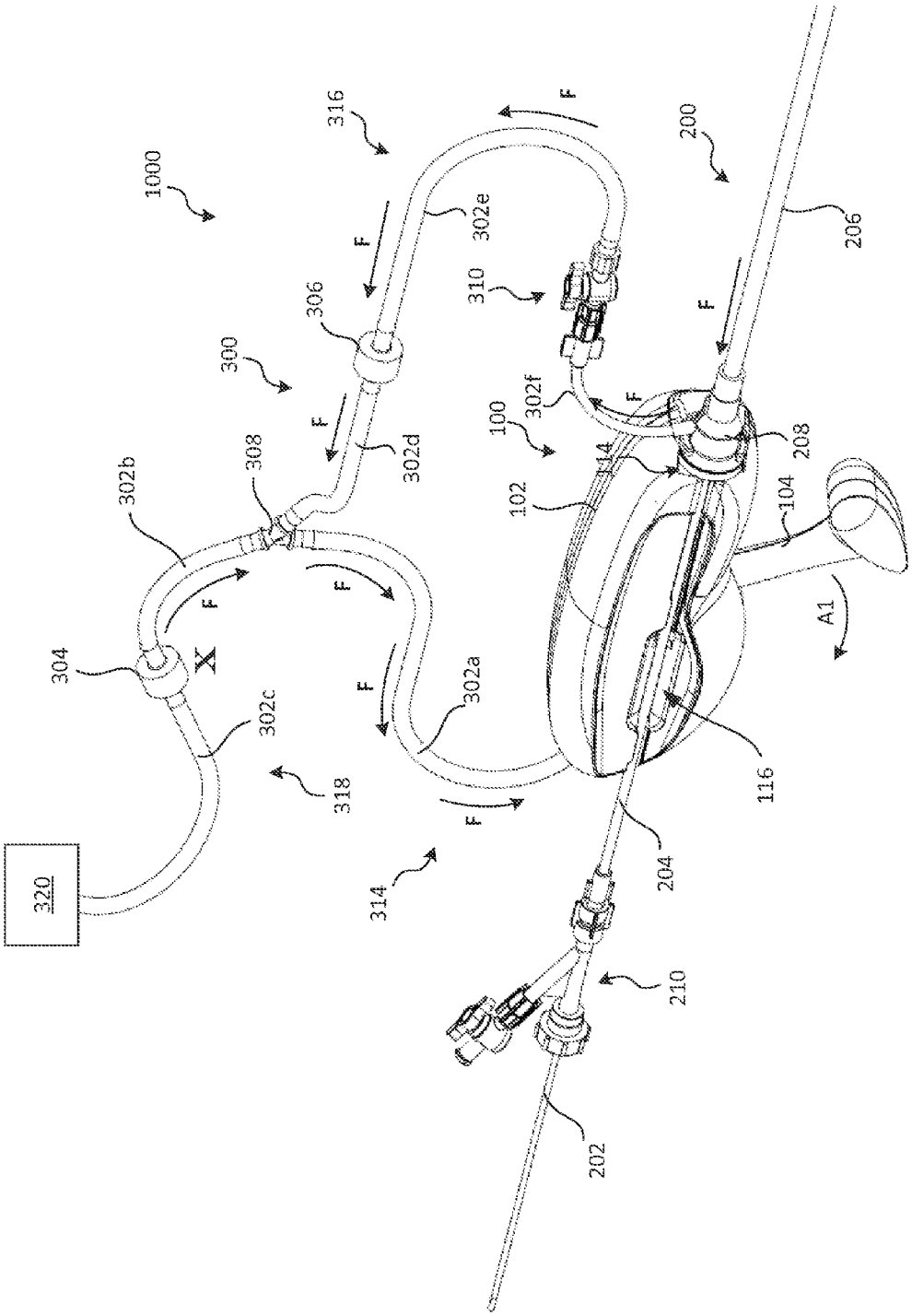
1000
316
F
200
302e
206
306
310
300
302f
100
208
302d
114
302b
308
102
104
304
X
302a
A1
302c
318
116
320
314
204
210
202

FIG. 4A

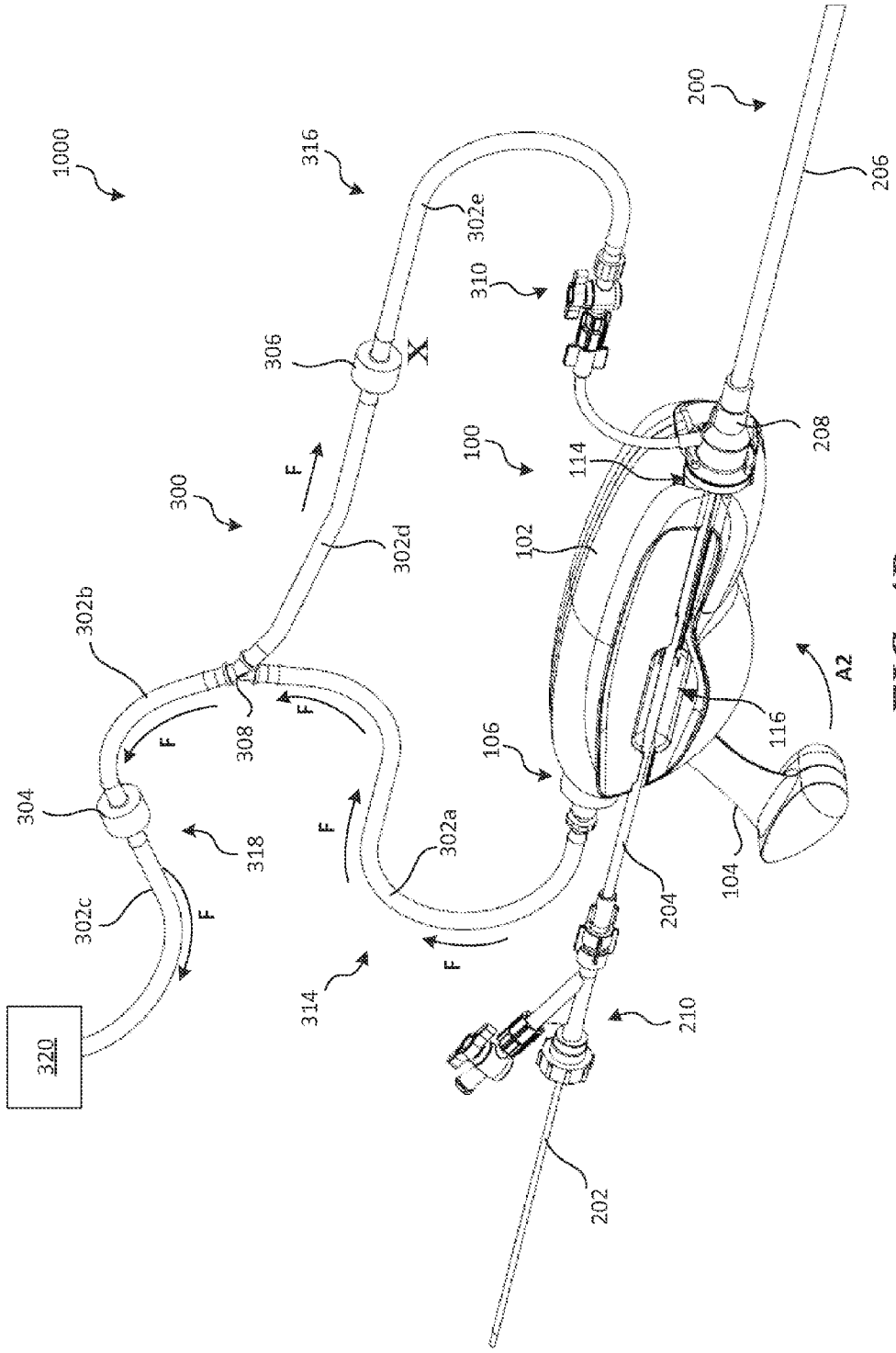
1000
316
302e
310
306
X
300
F
302d
302b
308
304
318
302c
320
314
302a
106
100
114
102
208
200
206
116
A2
104
204
210
202

FIG. 4B

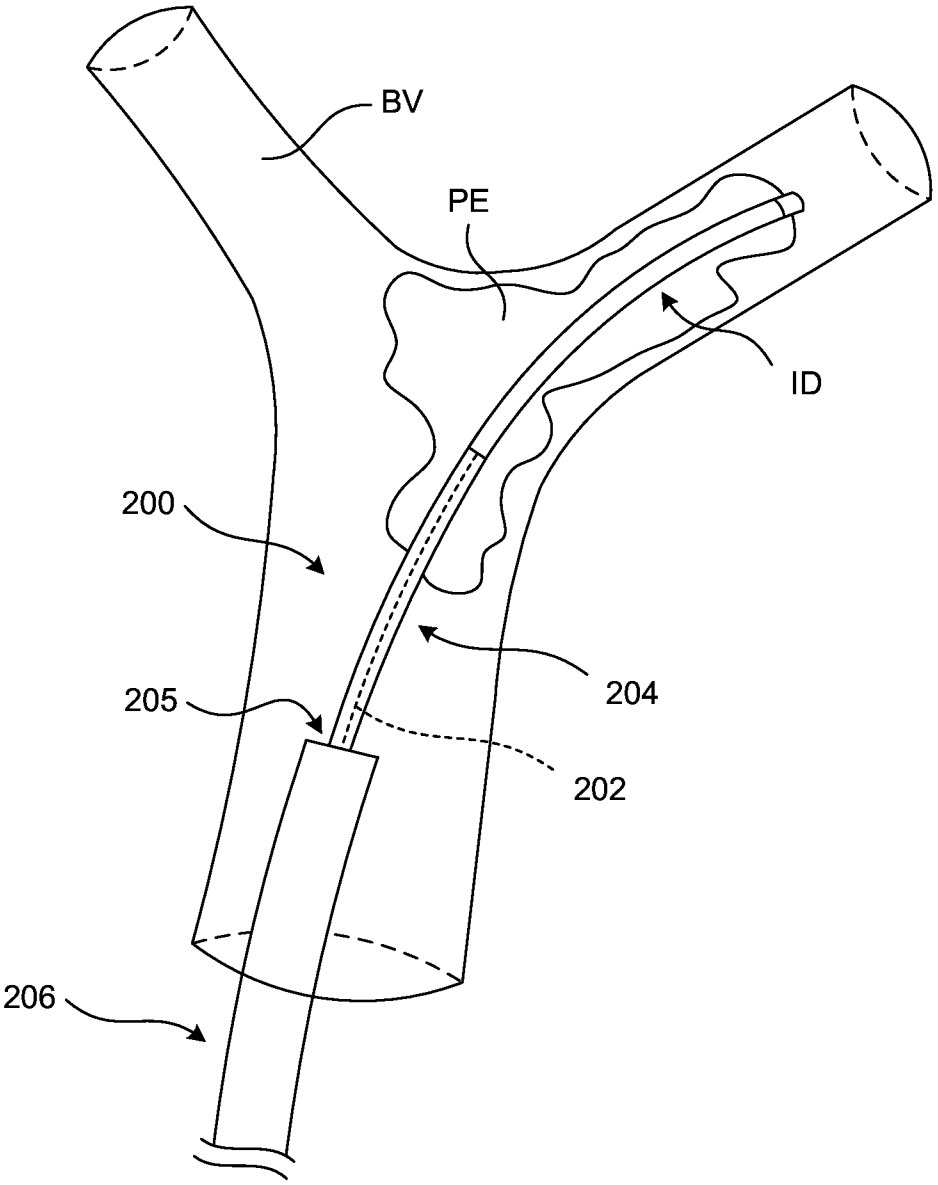

FIG. 5A

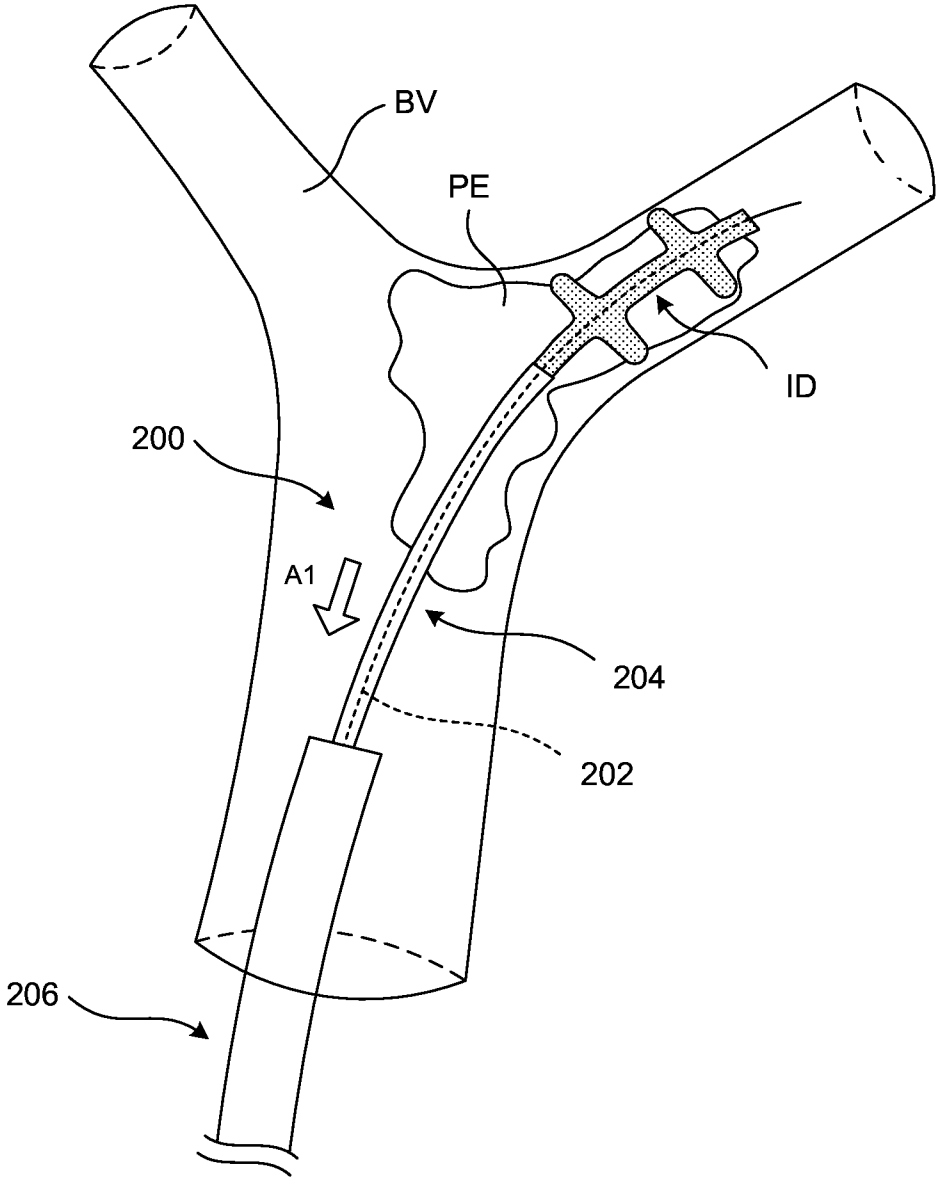

FIG. 5B

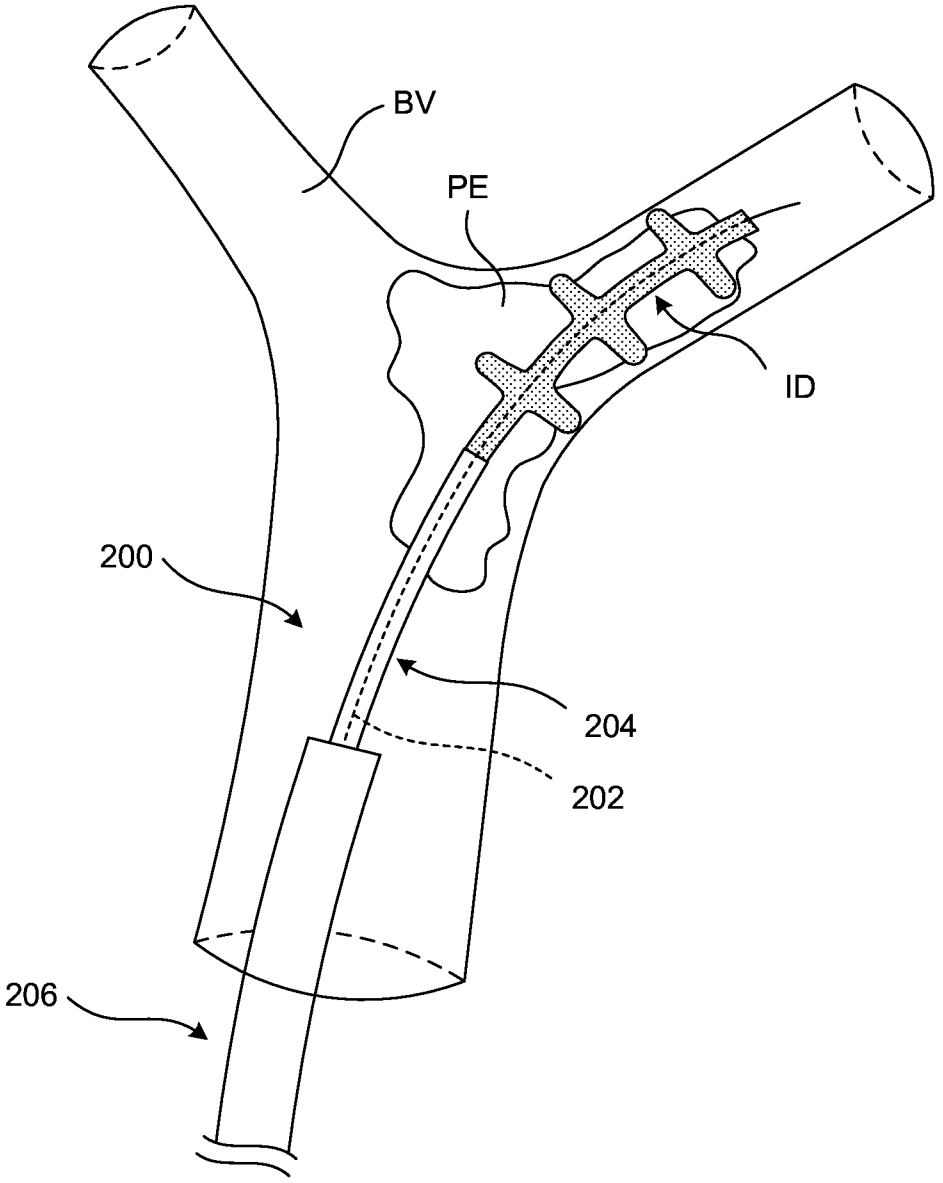

FIG. 5C

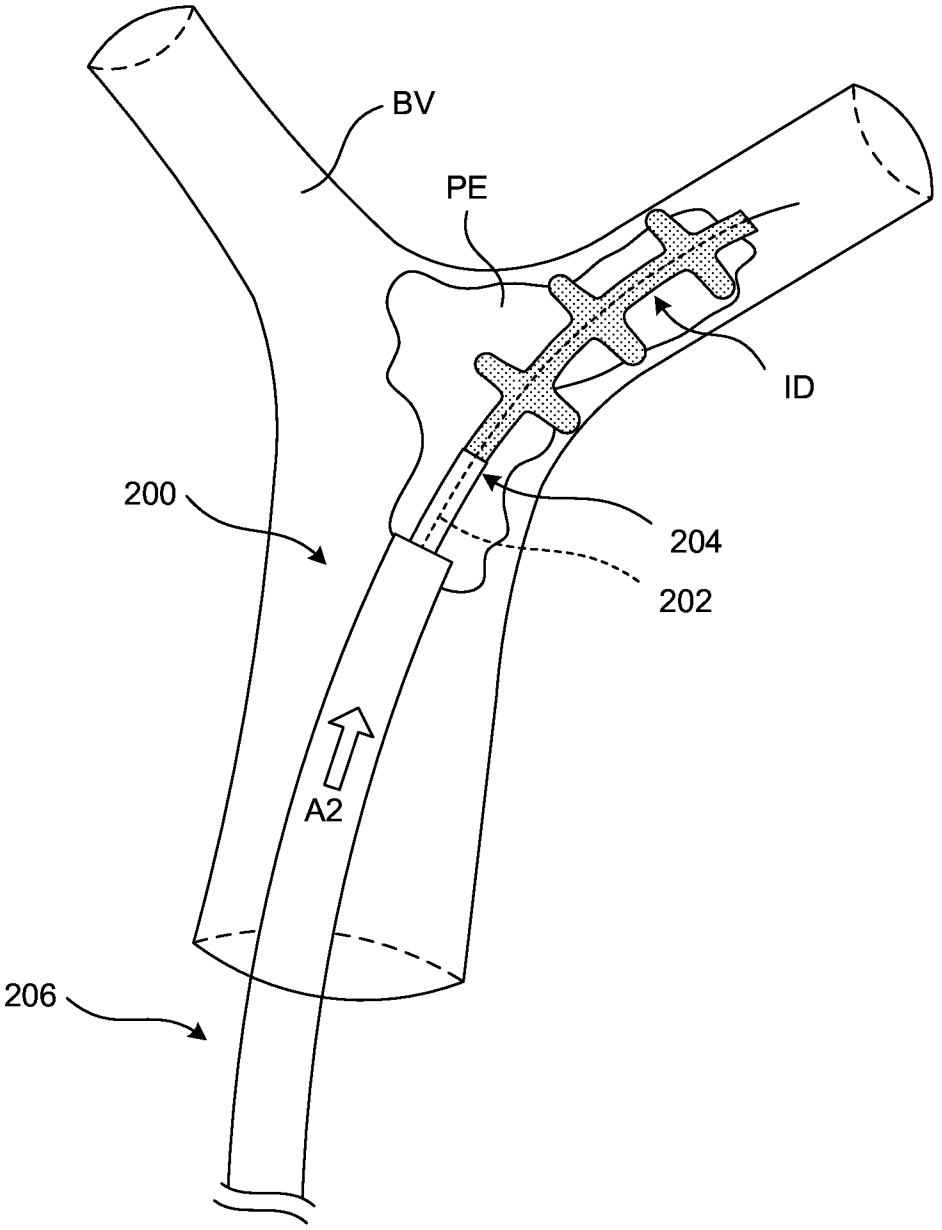

FIG. 5D

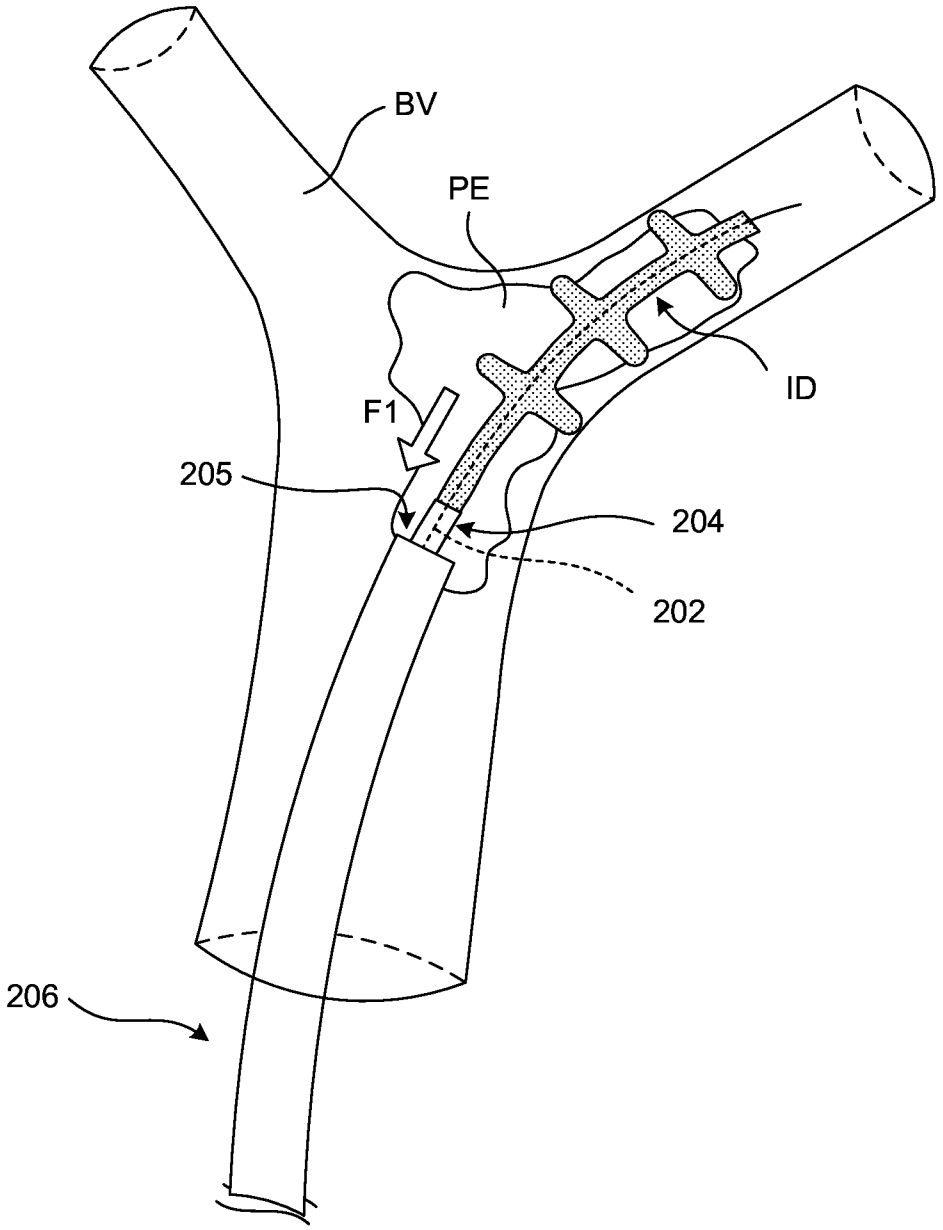

FIG. 5E

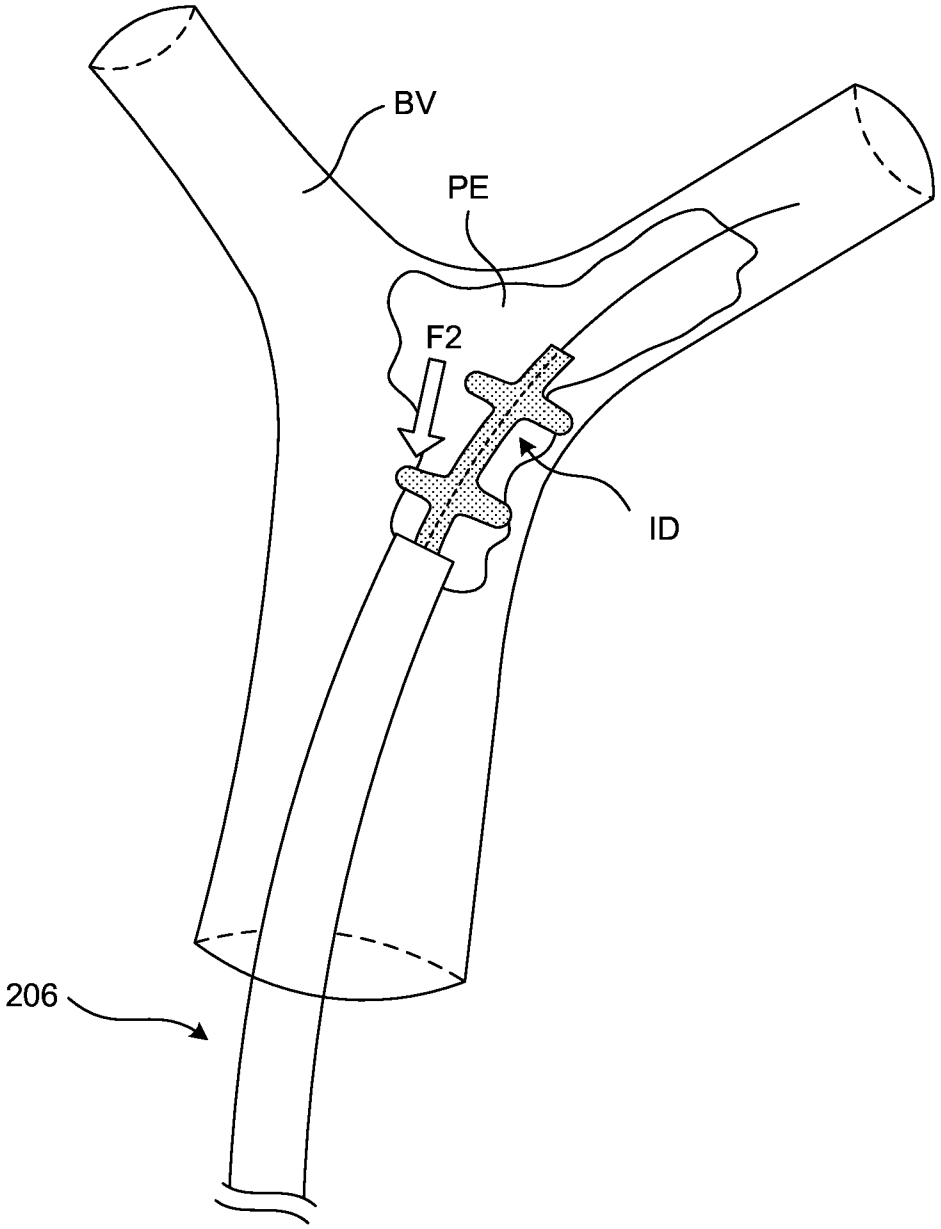

FIG. 5F

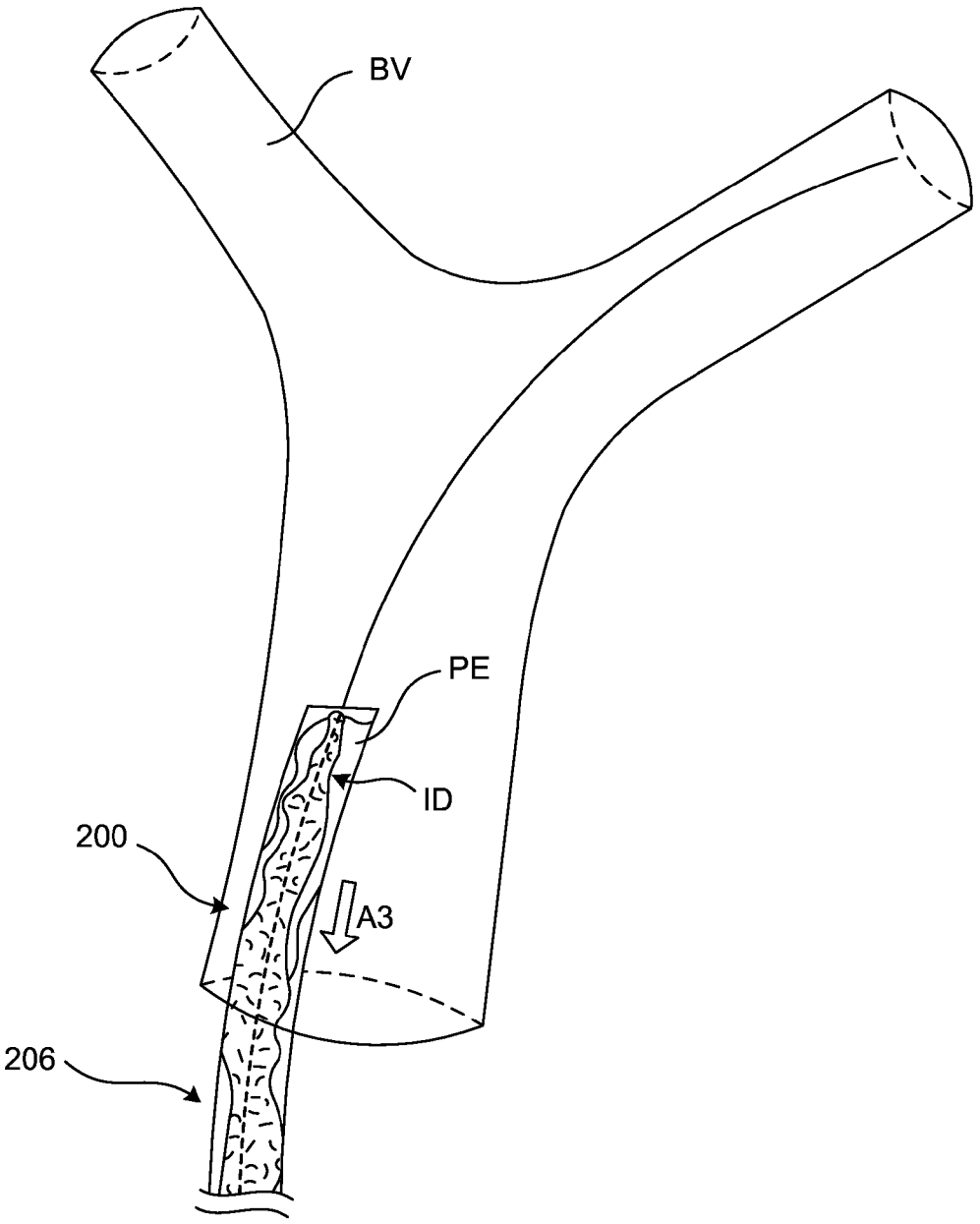

FIG. 5G

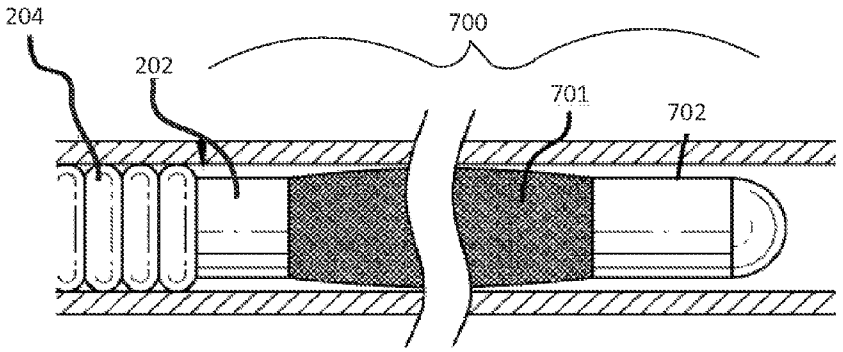
204
202
700
701
702

FIG. 6

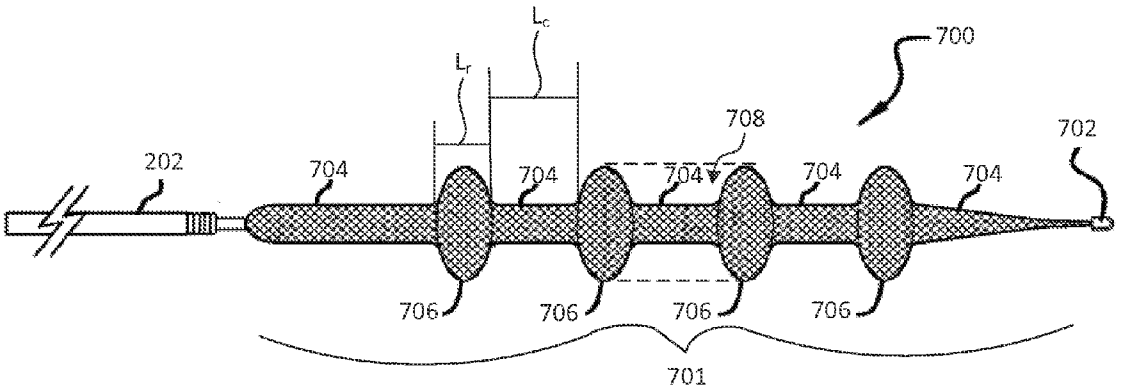
L_c
L_r
700
708
702
202
704
704
704
704
704
706
706
706
706
701

FIG. 7

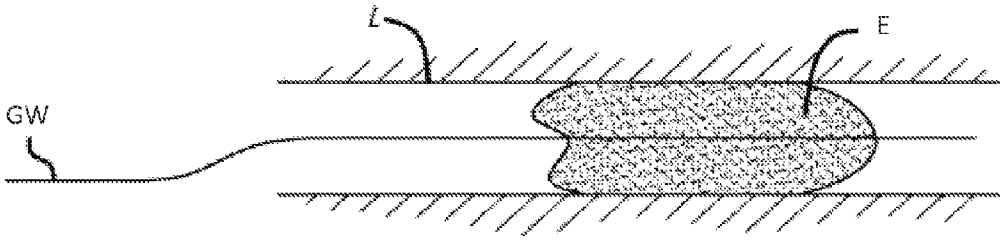

FIG. 8A

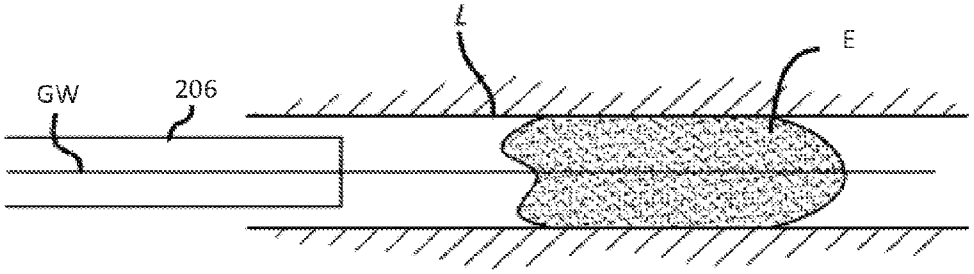

FIG. 8B

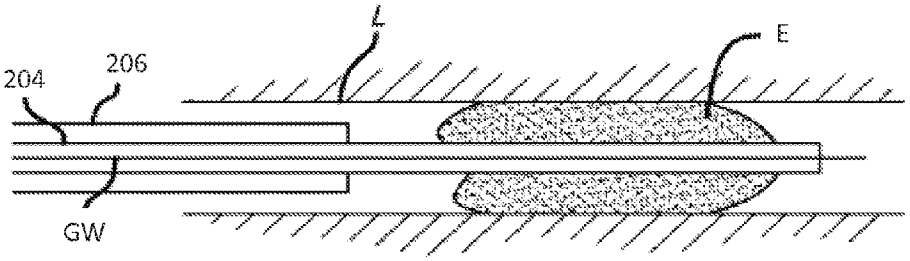

FIG. 8C

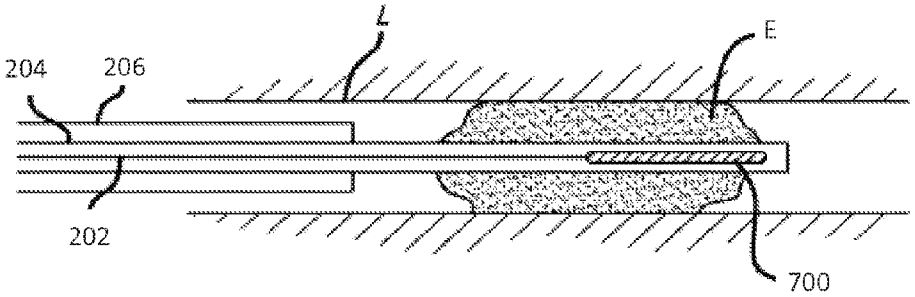

FIG. 8D

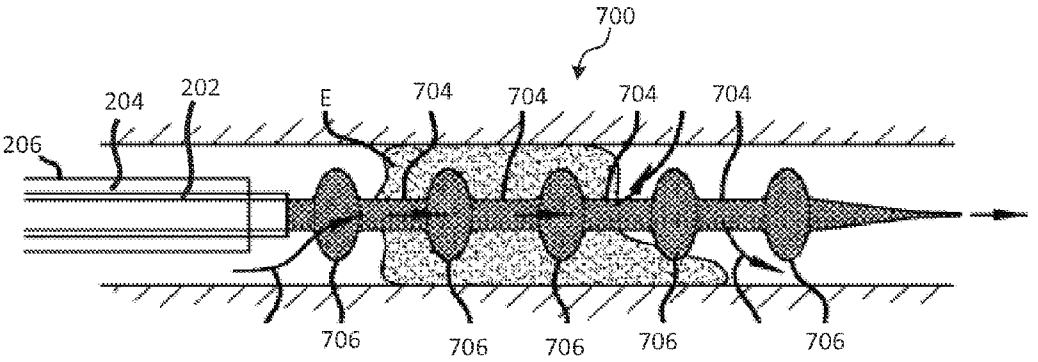
700
204
202
E
704
704
704
704
206
706
706
706
706
706

FIG. 8E

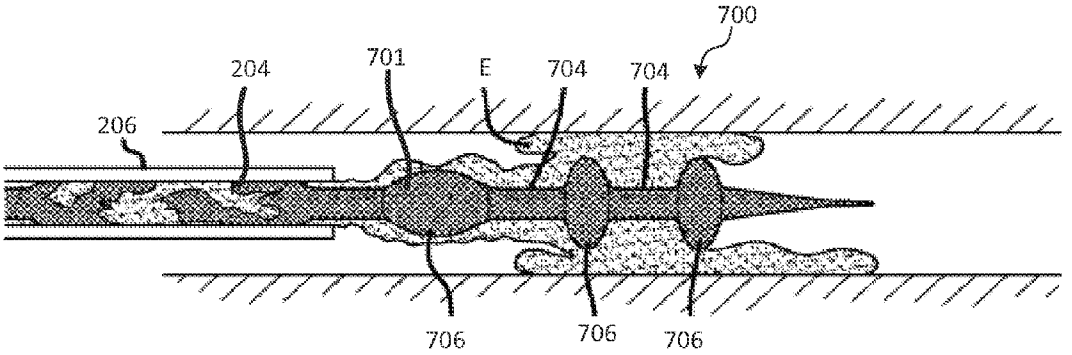
700
204
701
E
704
704
206
706
706
706

FIG. 8F

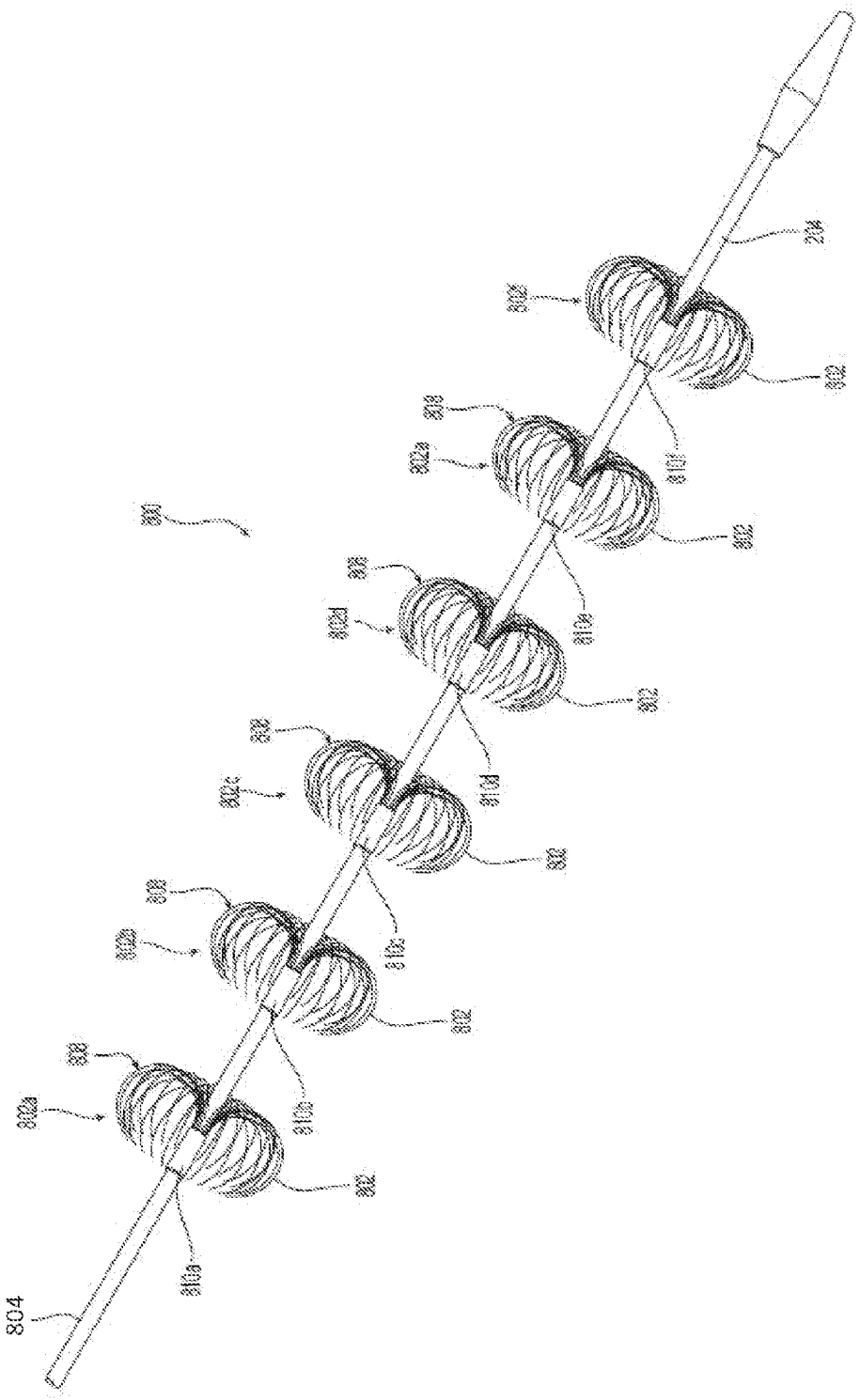

FIG. 9A

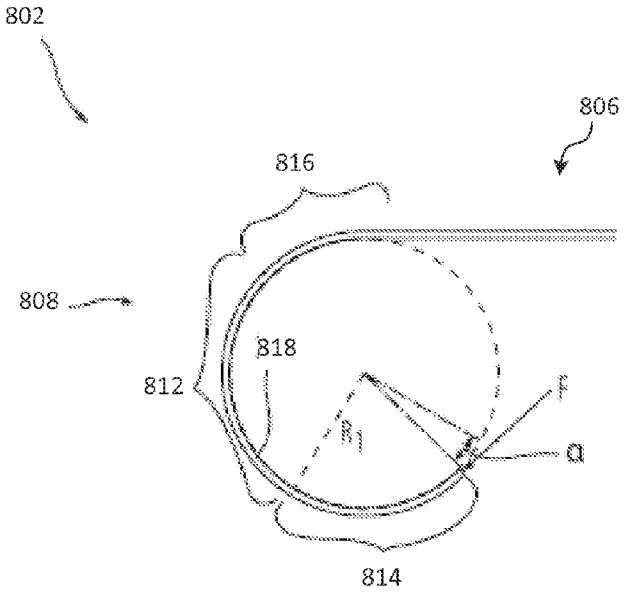
802
806
816
808
818
812
R_1
F
a
814

FIG. 9B

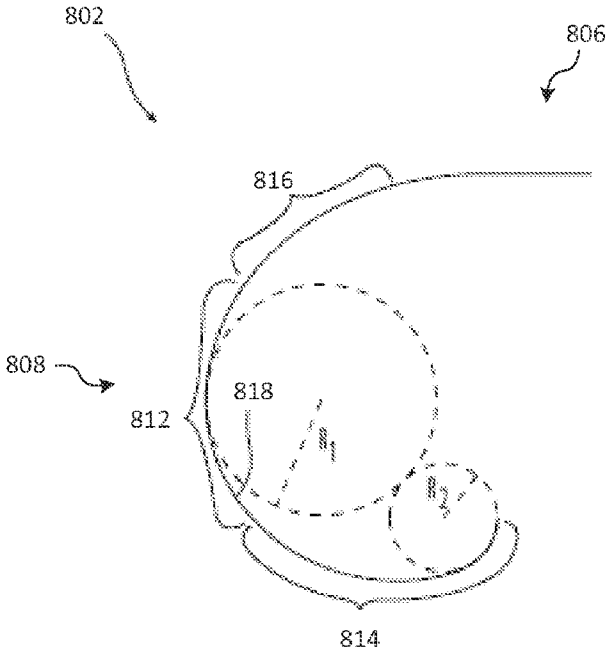
802
806
816
808
818
812
R_1
R_2
814

FIG. 9C

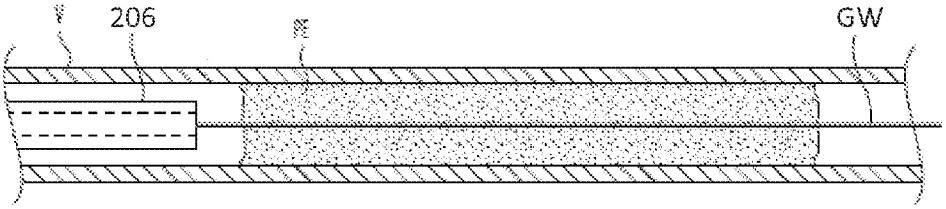

FIG. 10A

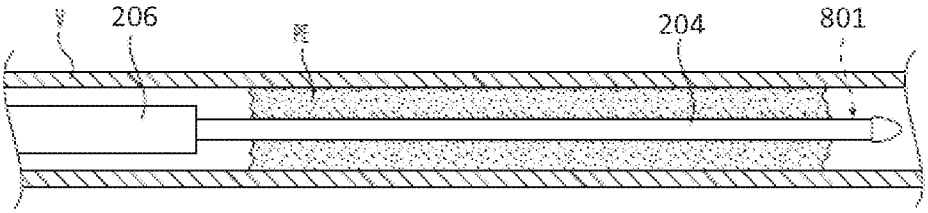

FIG. 10B

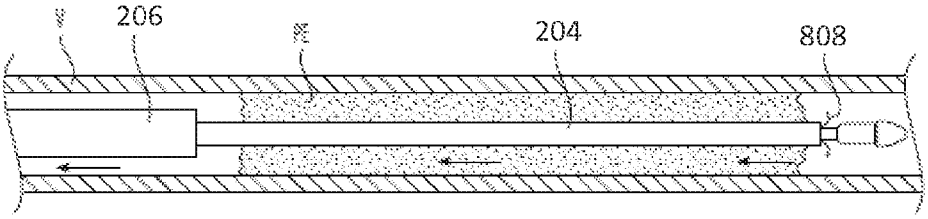

FIG. 10C

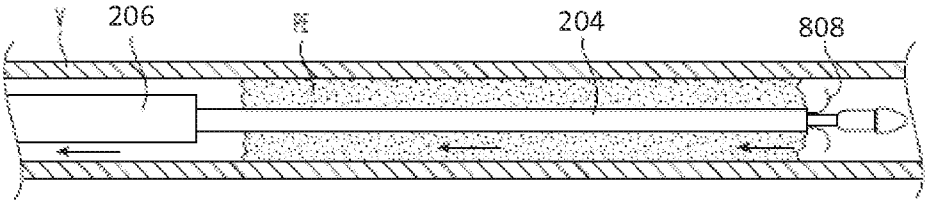

FIG. 10D

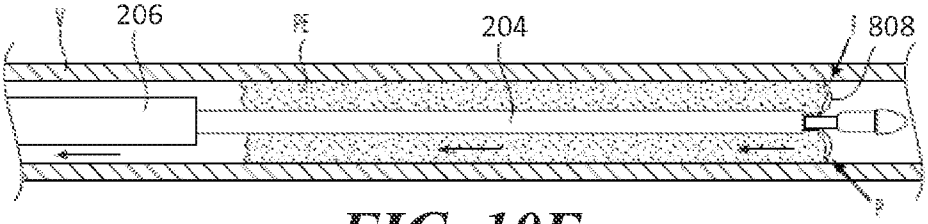

FIG. 10E

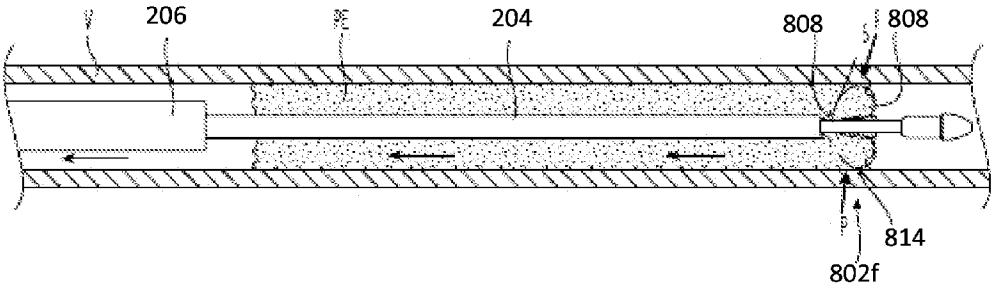

FIG. 10F

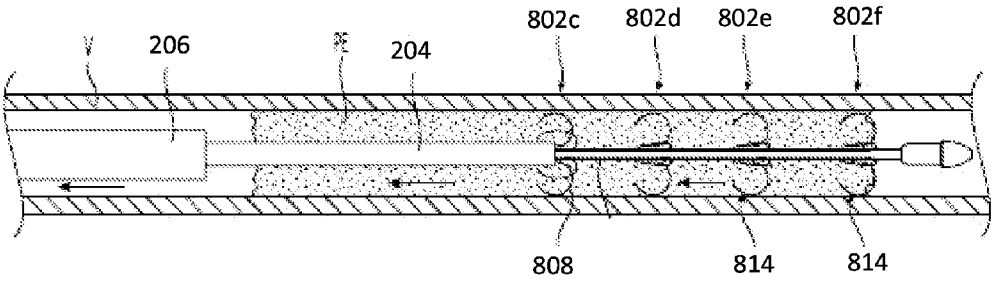

FIG. 10G

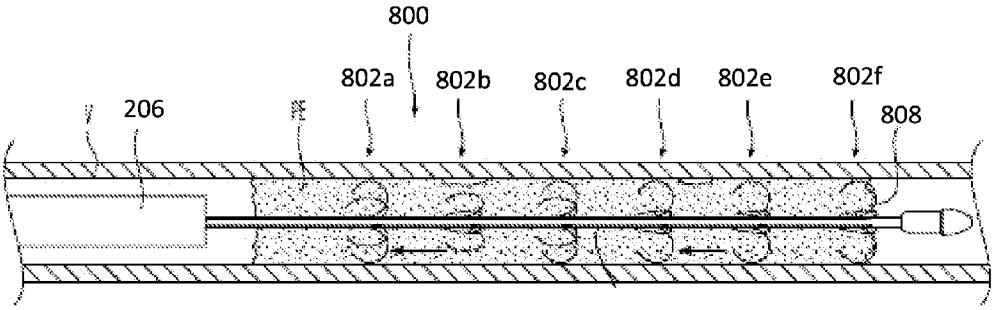

FIG. 10H

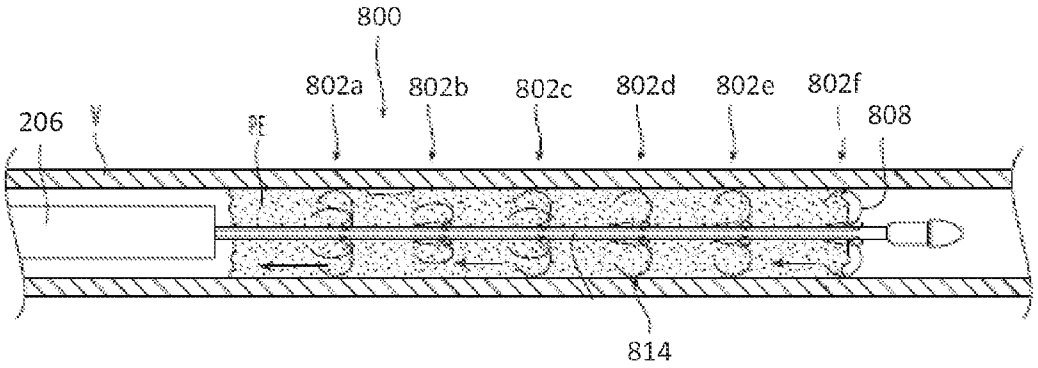

FIG. 10I

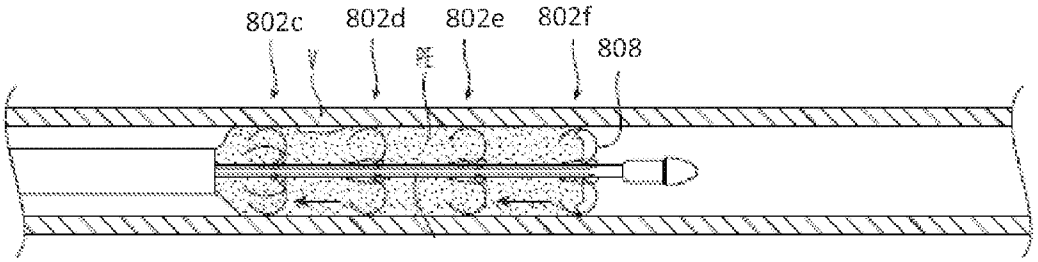

FIG. 10J

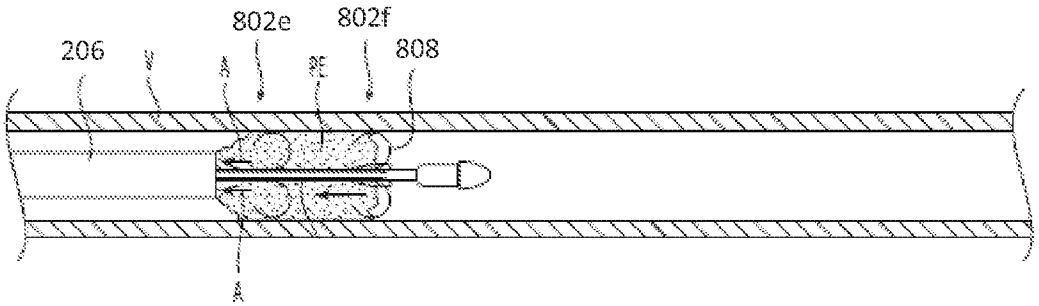

FIG. 10K

RETRACTION AND ASPIRATION DEVICE FOR TREATING EMBOLISM AND ASSOCIATED SYSTEMS AND METHODS

CROSS-REFERENCE TO RELATED APPLICATIONS

[0001] The present application claims the benefit of U.S. Provisional Patent Application No. 62/009,805, filed Jun. 9, 2014, titled "RETRACTION AND ASPIRATION APPARATUS FOR TREATING EMBOLISM AND ASSOCIATED SYSTEMS AND METHODS," which is incorporated herein by reference in its entirety.

TECHNICAL FIELD

[0002] The present technology relates generally to devices and methods for intravascular treatment of emboli within a blood vessel of a human patient. Many embodiments of the technology relate to an apparatus for simultaneous retraction and aspiration of an embolism and associated systems and methods.

BACKGROUND

[0003] Thromboembolic events are characterized by an occlusion of a blood vessel. Thromboembolic disorders, such as stroke, pulmonary embolism, heart attack, peripheral thrombosis, atherosclerosis, and the like, affect many people. These disorders are a major cause of morbidity and mortality.

[0004] When an artery is occluded by a clot, tissue ischemia develops. The ischemia will progress to tissue infarction if the occlusion persists. Infarction does not develop or is greatly limited if the flow of blood is reestablished rapidly. Failure to reestablish blood flow can lead to the loss of limb, angina pectoris, myocardial infarction, stroke or even death.

[0005] In the venous circulation, occlusive material can also cause serious harm. Blood clots can develop in the large veins of the legs and pelvis, a common condition known as deep venous thrombosis (DVT). DVT arises most commonly when there is a propensity for stagnated blood (e.g., long distance air travel, immobility, etc.) and clotting (e.g., cancer, recent surgery, such as orthopedic surgery, etc.). DVT causes harm by: (1) obstructing drainage of venous blood from the legs leading to swelling, ulcers, pain, and infection, and (2) serving as a reservoir for blood clots to travel to other parts of the body including the heart, lungs and across an opening between the chambers of the heart (patent foramen ovale) to the brain (stroke), abdominal organs or extremities.

[0006] In the pulmonary circulation, the undesirable material can cause harm by obstructing pulmonary arteries—a condition known as pulmonary embolism. If the obstruction is upstream, in the main or large branch pulmonary arteries, it can severely compromise total blood flow within the lungs, and therefore the entire body, and result in low blood pressure and shock. If the obstruction is downstream, in large to medium pulmonary artery branches, it can prevent a significant portion of the lung from participating in the exchange of gases to the blood resulting in low blood oxygen and buildup of blood carbon dioxide.

[0007] There are many existing techniques employed to reestablish blood flow in an occluded vessel. One common surgical technique, an embolectomy, involves incising a blood vessel and introducing a balloon-tipped device (such as the Fogarty catheter) to the location of the occlusion. The balloon is then inflated at a point beyond the clot and used to translate the obstructing material back to the point of incision. The obstructing material is then removed by the surgeon. Although such surgical techniques have been useful, exposing a patient to surgery may be traumatic and best avoided when possible. Additionally, the use of a Fogarty catheter may be problematic due to the possible risk of damaging the interior lining of the vessel as the catheter is being withdrawn.

[0008] Percutaneous methods are also utilized for reestablishing blood flow. A common percutaneous technique is referred to as balloon angioplasty where a balloon-tipped catheter is introduced to a blood vessel (e.g., typically through an introducing catheter). The balloon-tipped catheter is then advanced to the point of the occlusion and inflated in order to dilate the stenosis. Balloon angioplasty is appropriate for treating vessel stenosis, but it is generally not effective for treating acute thromboembolisms as none of the occlusive material is removed and the vessel will re-stenos after dilation. Another percutaneous technique involves placing a catheter near the clot and infusing streptokinase, urokinase or other thrombolytic agents to dissolve the clot. Unfortunately, thrombolysis typically takes hours to days to be successful. Additionally, thrombolytic agents can cause hemorrhage and in many patients the agents cannot be used at all.

[0009] Various devices exist for performing a thrombectomy or removing other foreign material. However, such devices have been found to have structures which are either highly complex, cause trauma to the treatment vessel, or lack sufficient retaining structure and thus cannot be appropriately fixed against the vessel to perform adequately. Furthermore, many of the devices have highly complex structures that lead to manufacturing and quality control difficulties as well as delivery issues when passing through tortuous or small diameter catheters. Less complex devices may allow the user to pull through the clot, particularly with inexperienced users, and such devices may not completely capture and/or collect all of the clots.

[0010] Thus, there exists a need for an improved embolic extraction device.

BRIEF DESCRIPTION OF THE DRAWINGS

[0011] Many aspects of the present technology can be better understood with reference to the following drawings. The components in the drawings are not necessarily to scale. Instead, emphasis is placed on illustrating clearly the principles of the present disclosure.

[0012] FIG. **1**A is a perspective view of one embodiment of a retraction and aspiration device in accordance with the present technology shown in a first state.

[0013] FIG. **1**B is a side view of the retraction and aspiration device of FIG. **1**A shown in a first state with a portion of the housing removed for purposes of illustration.

[0014] FIG. **2**A is an isolated rear perspective view of the actuation mechanism of FIGS. **1**A-**1**B shown in a first position.

[0015] FIG. **2**B is an isolated rear perspective view of the actuation mechanism of FIGS. **1**A-**1**B shown in a second position.

[0016] FIG. **3**A is a side view of the retraction and aspiration device of FIGS. **1**A-**1**B shown in a first state with a portion of the housing removed for purposes of illustration.

[0017] FIG. **3**B is a side view of the retraction and aspiration device of FIGS. **1**A-**1**B shown in an intermediate state with a portion of the housing removed for purposes of illustration.

[0018] FIG. **4**A is a perspective view of a retraction and aspiration system configured in accordance with the present technology shown in a first state.

[0019] FIG. **4**B is a perspective view of the retraction and aspiration system shown in FIG. **4**A in a second state.

[0020] FIGS. **5**A-**5**G are schematic illustrations of a distal portion of the retraction and aspiration system during a clot removal procedure in accordance with the present technology.

[0021] FIG. **6** is a side view of a clot treatment device configured in accordance with the present technology shown in a delivery state constrained within a delivery sheath.

[0022] FIG. **7** is a side view of the clot treatment device shown in FIG. **6** in a deployed state.

[0023] FIGS. **8**A-**8**F illustrate a method for using the clot treatment device shown in FIGS. **6**-**7** and configured in accordance with the present technology to remove clot material from a vessel.

[0024] FIG. **9**A is a perspective view of a clot treatment device configured in accordance with another embodiment of the present technology shown in a deployed state.

[0025] FIG. **9**B is an isolated view of a clot engagement member configured in accordance with the present technology shown in a deployed state.

[0026] FIG. **9**C is an isolated view of another embodiment of a clot engagement member configured in accordance with the present technology shown in a deployed state.

[0027] FIGS. **10**A-**10**K illustrate a method for using the clot treatment device shown in FIG. **9**A configured in accordance with the present technology to remove clot material from a vessel.

DETAILED DESCRIPTION

[0028] Specific details of several embodiments of retraction and aspiration devices, systems and associated methods in accordance with the present technology are described below with reference to FIGS. **1**A-**10**K. Although many of the embodiments are described below with respect to devices, systems, and methods for treating a pulmonary embolism, other applications and other embodiments in addition to those described herein are within the scope of the technology (e.g., intravascular procedures for indications other than the treatment of emboli, intravascular procedures for treating cerebral embolism, etc.). Additionally, several other embodiments of the technology can have different states, components, or procedures than those described herein. Moreover, it will be appreciated that specific elements, substructures, advantages, uses, and/or other features of the embodiments described with reference to FIGS. **1**A-**10**K can be suitably interchanged, substituted or otherwise configured with one another in accordance with additional embodiments of the present technology. Furthermore, suitable elements of the embodiments described with reference to FIGS. **1**A-**10**K can be used as standalone and/or self-contained devices. A person of ordinary skill in the art, therefore, will accordingly understand that the technology can have other embodiments with additional elements, or the technology can have other embodiments without several of the features shown and described below with reference to FIGS. **1**A-**10**K.

[0029] With regard to the terms "distal" and "proximal" within this description, unless otherwise specified, the terms can reference a relative position of the portions of a retraction and aspiration apparatus and/or an associated catheter system with reference to an operator and/or a location in the vasculature. Also, as used herein, the designations "rearward," "forward," "upward," "downward," etc. are not meant to limit the referenced component to use in a specific orientation. It will be appreciated that such designations refer to the orientation of the referenced component as illustrated in the Figures; the retraction and aspiration device and system of the present technology can be used in any orientation suitable to the user.

I. Selected Embodiments of Retraction and Aspiration Devices and Methods of Use

[0030] FIG. **1**A is side perspective view of a retraction and aspiration device **100** (also referred to herein as the "RA device **100**") configured in accordance with the present technology, shown in a first state. FIG. **1**B is a side view of the RA device **100** shown in FIG. **1**A with a portion of the RA device **100** removed for ease of illustration. Referring to FIGS. **1**A-**1**B together, the RA device **100** includes a housing **102**, an actuation mechanism **103** (FIG. **1**B) that includes a lever **104** coupled to and extending from the housing **102**, and a pressure source **106**. In some embodiments the RA device **100** is configured to be coupled to the proximal portion of a catheter (not shown in FIGS. **1**A-**1**B), such as a catheter that supports an interventional device. As described in greater detail below, when the RA device **100** is at least coupled to a catheter, movement of the lever **104** activates the actuation mechanism **103** to simultaneously generate negative pressure in the pressure source **106** and retract a portion of the catheter system.

[0031] The housing **102** can have a proximal portion **100***a*, a distal portion **100***b*, and an opening **114** at the distal portion **100***b* configured to receive a portion of a catheter and/or an attachment member configured to mechanically couple a catheter to the housing **102**. For example, the housing **102** can include a channel **116** (FIG. **1**A) that extends proximally from the opening **114** along at least a portion of the housing **102**. In some embodiments, the channel **116** can extend approximately the length of the housing **102**, as shown in FIG. **1**A. The channel **116** can have a height at least as great as the outer diameter of the associated catheter (and/or a component of the catheter, such as a delivery sheath) such that the catheter can fit sideways through the channel **116**. The housing **102** can include one or more bosses (e.g., boss **130**, boss **132**, and boss **134** shown in FIG. **1**B) that extend into the interior of the housing **102** and are configured to guide and/or limit movement of one or more components of the RA device **100**, as described in greater detail below. As shown in FIGS. **1**A-**1**B, the housing **102** can have an undulating shape (e.g., kidney-bean shaped) to improve grip-ability of the RA device **100**, for example, during movement of the lever **104**. In other embodiments, the housing **102** can have other suitable shapes and/or configurations.

[0032] The pressure source **106** can be mounted at least partially within the housing **102** and configured to generate negative and/or positive pressure. For example, when the RA device **100** is coupled to a lumen of a catheter, activation of the pressure source **106** generates a negative pressure in the lumen of the catheter, as described in greater detail below with reference to FIGS. **4**A-**4**B and **5**A-**5**G. As shown in FIG. **1**B, in some embodiments the pressure source **106** is a syringe having a barrel **108** (e.g., a 20 cc barrel), a plunger **110**, and a piston (not visible) coupled to an end portion of the plunger **110**. One of the plunger **110** or the barrel **108** can be fixed relative to the housing **102**, while the other of the plunger **110**

or the barrel **108** is moveable relative to the housing **102**. For example, in the embodiment shown in FIG. **1**B, the barrel **108** has an outwardly extending flange **109** coupled to a portion of the actuation mechanism **103**, and the plunger **110** has an outwardly extending flange **111** coupled to the boss **132** extending from the housing **102**. Accordingly, the RA device **100** is configured such that the barrel **108** can move with the actuation mechanism **103** while the plunger **110** remains generally fixed relative to the housing **102**.

[0033] The pressure source **106** is moveable between a first configuration (FIGS. **1**A-**1**B) and a second configuration (FIG. **2**B) (e.g., via activation of the actuation mechanism **103**, as described in greater detail below). In the first configuration, the flange **109** of the barrel **108** is closest to the flange **111** of the plunger **110**. When the pressure source **106** is in the second configuration, the flange **109** of the barrel **108** is farthest from the flange **111** of the plunger **110**. As the pressure source **106** moves between the first and second configurations, the pressure source **106** generates pressure. When the pressure source **106** is at rest, the pressure source **106** is not generating pressure.

[0034] Although the pressure source **106** is depicted and described herein as a syringe, the pressure source **106** can be any suitable pressure-generating device, such as an electrical pump or other mechanical pump. For example, in some embodiments the pressure source **106** can be an electrical pump controlled by an on/off switch. Moreover, although FIGS. **1**A-**1**B show at least a portion of the pressure source **106** disposed within the housing **102**, in other embodiments the pressure source **106** can be a separate component that is mechanically or electrically coupled to the RA device **100**. Additionally, the RA device **100** can be coupled to more than one pressure source. In those embodiments where the pressure source is a syringe, the pressure source can be a syringe having a barrel volume between about 10 cc and about 80 cc. In some embodiments, the syringe can have a barrel volume between about 20 cc and about 40 cc (e.g., 20 cc, 30 cc, 40 cc, etc.).

[0035] FIGS. **2**A and **2**B are rear perspective isolated views of the actuation mechanism **103** shown in FIGS. **1**A-**1**B in a first and second position, respectively, shown coupled to a catheter C. Referring to FIGS. **1**B and **2**A-**2**B together, the actuation mechanism **103** can include the lever **104**, a first slider **140** coupled to the lever **104**, a second slider **142** coupled to the first slider **140**, and a cam **138** coupled to the second slider **142**. The actuation mechanism **103** is configured to simultaneously activate the pressure source **106** (FIG. **1**B) and interact with the catheter C in response to movement of the lever **104**, as described in greater detail below.

[0036] The lever **104** can have a handle portion **118** that projects from the housing **102** and a link portion **122** disposed within the housing **102**. The handle portion **118** is configured to be grasped by an operator. In some embodiments, the handle portion **118** can include an enlarged portion **120** located along the handle portion **118** furthest from the housing **102**. The enlarged portion **120**, for example, can be configured to increase the handle portion's surface area, thereby improving grip-ability of the handle portion **118**. The link portion **122** can be configured to mechanically couple the lever **104** to the housing **102** and/or the actuation mechanism **103**. For example, as shown in FIGS. **1**B and **2**A-**2**B, the link portion **122** includes a flange **128** configured to slidably engage the boss **130** of the housing **102**. In some embodiments, both the flange **128** of the lever **104** and the boss **130** of the housing **102** can be curved to induce rotation of the lever **104** about the boss **130** when a user moves the handle portion **118**. Accordingly, the lever **104** is moveable between a first position (FIG. **2**A) and a second position (FIG. **2**B). In the embodiments illustrated herein, in the first position the lever **104** is closest to the housing **102** and in the second position the lever **104** is furthest from the housing **102**. In other embodiments, however, in the first position the lever **104** is furthest from the housing **102** and in the second position the lever **104** is closest to the housing **102**.

[0037] The link portion **122** also includes a slot **124** that couples the lever **104** to the first slider **140** of the actuation mechanism **103** via a pin **126**. The slot **124** is located along the lever **104** between the handle portion **118** and an opposite end of the lever **104**. During movement of the lever **104**, the pin **126** slides within and along the slot **124**; as such the slot **124** pulls on the pin **126**, thereby causing linear movement of the first slider **140**. In sum, movement of the lever **104** between the first and second positions moves the actuation mechanism **103** between the first and second positions (and thus the RA device **100** between the first and second states).

[0038] In some embodiments, the lever **104** can be replaced by other suitable actuators, such as other suitable linear actuators (e.g., a rack-and-pinion mechanism, an electromechanical actuator, etc.). For example, in some embodiments the lever **104** can be in the form of a push button moveable between a first or off position and a second on position that simultaneously actuates the pressure source and retraction mechanism. Additionally, in some embodiments the lever **104** and/or device **100** can be configured such that pulling the lever **104** from the device **100** mechanically initiates the retraction mechanism and at the same time triggers activation of an automatic pressure source. Moreover, the lever **104** can be coupled to the housing **102** via other suitable means. For example, in some embodiments the lever **104** can be configured to pivot and/or rotate around a fixed point on the housing **102**.

[0039] Referring still to FIGS. **1**B and **2**A-**2**B, the cam **138** is configured to mechanically couple the first and second sliders **140**, **142**. In the illustrated embodiments, the cam **138** includes a slot **147** and a locking portion **148**. The cam **138** is pivotably coupled to the first slider **140**, for example, via a pin **146** that extends through the slot **147**. The cam **138** is fixed to the second slider **142**, for example, via a pin **144**. In other embodiments, the cam **138** can be coupled to the first and/or second slider **140**, **142** via other suitable coupling means known in the art.

[0040] The locking portion **148** of the cam **138** is configured to engage one or more components of the associated catheter C. For example, as best shown in FIG. **2**A, the locking portion **148** can include a rounded recess configured to contact the catheter C and secure the catheter C between the locking portion **148** and the second slider **142**. In other embodiments, the locking portion **148** can have other suitable shapes and/or configurations. As described in greater detail below, when the actuation mechanism **103** is activated, the cam **138** rotates such that the locking portion **148** engages a portion of the catheter C, thereby securing the catheter C to a portion of the actuation mechanism **103**.

[0041] The first slider **140** can include a first portion **150** and a second portion **154**. The first portion **150** can be coupled to the lever **104** and configured to guide movement of the first slider **140** relative to the housing **102**. In the illustrated embodiment, the first portion **150** includes a cylindrical boss

(not visible) slidably received by the slot **124** positioned along the link portion **122** of the lever **104**. A screw **126** is positioned within the cylindrical boss to keep the boss in the slot **124**. As such, rotation of the lever **104** causes linear movement of the first slider **140**. In other embodiments, the first slider **140** can be mechanically coupled to the lever by other suitable means known in the art, such as by a pin, yoke, etc. The first portion **150** also includes a slot **153** configured to receive and slide along the boss **134** (FIG. **1**B) of the housing **102**. The second portion **154** can be coupled to or contiguous with the first portion **150** and is configured to receive at least a portion of the pressure source **106** (FIG. **1**B). The second portion **154**, for example, can extend upwardly from the first portion **150** and have a semi-circular shape. The second portion **154** can include a slot **155** configured to receive the flange **109** of the barrel **108** of the pressure source **106**, thereby fixing the barrel **108** relative to the first slider **140**. As such, linear movement of the first slider **140** causes linear movement of the barrel **108**. The second portion **156** of the first slider **140** also includes an opening (not visible) configured to receive the pin **146** extending through the slot **147** in the cam **138**. As such, the first slider **140** is moveably coupled to the cam **138** via an opening in the second portion **154**.

[0042] The second slider **142** is configured to receive one or more components of the catheter C. As described in greater detail below, the second slider **142** and the cam **138** together mechanically couple movement of the first slider **140** to the catheter C. In the illustrated embodiment, the second slider **142** is L-shaped and configured to receive and support a portion of the catheter C at an intersection of the L-shape. The second slider **142** can optionally include a friction pad **143** configured to engage a portion of the housing **102** to delay the movement of the second slider **142** relative to the first slider **140**. Once the locking portion **148** traps the catheter C, the first slider **142** and the second slider **142** move at the same rate.

[0043] Operation of the RA device **100** will now be described with reference to FIGS. **3**A-**3**B. FIGS. **3**A-**3**B are side views of the RA device **100** of FIGS. **1**A-**1**B shown in a first and second state, respectively, with a portion of the housing **102** removed for purposes of illustration. As shown in FIG. **3**A, when the lever **104** is in the first position, the pressure source **106** is not activated (e.g., generating pressure), and the cam **138** is disengaged from the catheter C to allow axial movement of the adjacent catheter component(s) relative to the second slider **142**. When the lever **104** is rotated away from the housing **102** toward the second position (indicated by arrow A**1**), the first slider **140** moves axially (indicated by arrow A**2**) in a proximal direction, thereby pulling the pin **146** and the first slider **140** (FIGS. **2**A-**2**B) proximally relative to the housing **102**.

[0044] As the pin **146** slides proximally, the cam **138** slides along the pin **146** (via slot **147**), thereby rotating the cam **138** counterclockwise around the pin **144** (indicated by arrow A**3**). As the cam **138** rotates, the locking portion **148** contacts a first portion of the catheter (not shown) and clamps the first portion of the catheter against a portion of the second slider **142**. The cam **138** continues to rotate until the pin **146** reaches a top end of the slot **147**. The length of the slot **147** and/or the distance between the locking portion **148** and an outer surface of the adjacent catheter limits the rotation of the cam **138**, and separation of the first and second sliders **140**, **142**. The pin **136** exerts a proximal force on the cam **138**, which moves the cam **138** and pulls the second slider **142** proximally via the pin **144** (indicated by arrow A**4**). Because the first portion of the catheter is trapped against the second slider **142** by the locking portion **148** of the cam **138**, proximal movement of the second slider **142** retracts the catheter.

[0045] As the pin **146** is sliding proximally, the second portion **154** also slides proximally, thereby pulling the flange **109** of the barrel **108** proximally to separate the barrel **108** from the plunger **110**. Proximal movement of the barrel **108** relative to the plunger **110** creates a negative pressure at an outlet portion of the barrel **108** which, as described below, can be used to aspirate a lumen of the catheter.

[0046] As shown in FIG. **3**B, when the lever **104** is in the second position, the pressure source **106** is in the second position and not activated, and the locking portion **148** of the cam **138** prevents axial movement of the catheter relative to the second slider **142**. When the lever **104** is rotated toward the housing **102** (toward the first position), the first slider **140** moves distally, thereby pushing the pin **146** distally and causing the cam **138** to slide along the pin **146** (via the slot **147**), thereby rotating the cam **138** clockwise about pin **144**. Rotation of the cam **138** clockwise causes the locking portion **148** to disengage the first portion of the catheter that was previously clamped between the locking portion **148** and the second slider **142**. It will be appreciated that the present disclosure is not limited to the directional terms of "clockwise" and "counterclockwise". For example, in some embodiments, the cam **138** can rotate clockwise to engage the catheter and counterclockwise to disengage the catheter.

[0047] Because the locking portion **148** disengages the first portion of the catheter that was previously clamped between the locking portion **148** and the second slider **142**, when the lever **104** is rotated from the second position to the first position the first slider **140** moves distally (towards its starting position) without moving the catheter. Thus, the next time the lever **104** is rotated away from the housing **102**, the cam **138** will engage a new portion of the catheter such that the catheter is incrementally retracted proximally each time the lever **104** is moved towards the second position. Such non-continuous, synchronized aspiration and retraction can be advantageous because it reduces the amount of fluid withdrawn from the patient's body during treatment. In addition, it may be advantageous to consolidate the steps and motions required to both mechanically transport the thrombus into the aspiration lumen of the catheter system and remove fluid from the aspiration lumen into one motion by one person.

II. Selected Embodiments of Retraction/Aspiration Systems and Methods of Use

[0048] FIG. **5**A is a side view of a distal portion of a catheter system **200** positioned adjacent an embolism or clot material PE within a pulmonary blood vessel BV. As shown in FIG. **5**A, the catheter system **200** can include an outer guide catheter **206** defining a lumen **205**, a delivery sheath **204** slidably received within the lumen of the guide catheter **206**, and an elongated push (and/or pull) member **202** slidably received within a lumen of the delivery sheath **204**. The guide catheter **206** and the delivery sheath **204** individually comprise an elongated shaft having a lumen and, in some embodiments, the push member **202** can also define a lumen (e.g., configured to receive a guidewire therethrough). In a particular embodiment, the catheter **200** does not include a guide catheter **206** and/or a delivery sheath **204**. As shown in FIG. **5**A, a distal portion of the push member **202** can be integral with

or coupled to an interventional device ("ID"), such as a clot removal and/or clot treatment device, that is housed within the delivery sheath **204**. Accordingly, axial movement of the push member **202** causes axial movement of the interventional device ID.

[0049] As shown in FIG. **5**A, the delivery sheath **204** and interventional device ("ID") (such as, for example, a clot treatment device), can be positioned at least partially within the clot material PE. Access to the pulmonary vessels can be achieved through the patient's vasculature, for example, via the femoral vein. The catheter system **200** can include an introducer **210** (FIG. **4**A) that can be partially inserted into the femoral vein. A guidewire (not shown) can be guided into the femoral vein through the introducer **210** and navigated through the right atrium, the tricuspid valve, the right ventricle, the pulmonary valve and into the main pulmonary artery. Depending on the location of the embolism, the guidewire can be guided to one or more of the branches of the right pulmonary artery and/or the left pulmonary artery. It will be understood, however, that other access locations into the venous circulatory system of a patient are possible and consistent with the present technology. For example, the user can gain access through the jugular vein, the subclavian vein, the brachial vein or any other vein that connects or eventually leads to the superior vena cava. Use of other vessels that are closer to the right atrium of the patient's heart can also be advantageous as it reduces the length of the instruments needed to reach the pulmonary embolism.

[0050] As shown in FIGS. **5**B-**5**C, the delivery sheath **204** can be withdrawn proximally (indicated by arrow A**1** in Figure SB) to allow the ID to expand within the clot material PE, thereby grabbing the nearby clot material PE. Although FIG. **5**B shows the ID positioned at the treatment site such that a distal terminus of the ID is distal to a distal terminus of the clot material PE, in some procedures the ID may be positioned such that the distal terminus of the ID is proximal of the distal terminus of the clot material PE. As shown in FIG. **5**D, in some embodiments the guide catheter **206** can optionally be advanced distally (indicated by arrow A**2**) to a proximal portion of the clot material PE.

[0051] FIGS. **4**A-**4**B are perspective views of a proximal portion of a retraction and aspiration system **1000** (also referred to herein as the "RA system **1000**") configured in accordance with the present technology, shown with the RA device **100** in a first state and a second state, respectively. Referring to FIGS. **4**A-**4**B, the RA system **1000** can include the RA device **100**, the catheter system **200**, and a tubing system **300**. A proximal portion of the guide catheter **206** can be received by a distal portion **100***b* (FIG. **1**B) of the RA device **100**. For example, a proximal portion of the guide catheter **206** can include an attachment piece **208** that is configured to be detachably coupled to the RA device **100** (e.g., via a snap-fit arrangement) to secure the catheter **200** to the RA device **100**. The attachment piece **208** can also fluidly connect the aspiration lumen to the tubing system **300** of the RA system **1000**. The push member **202** and ID can be preloaded into the delivery sheath **204**, and the delivery sheath **204** can be fed distally through the channel **116** (either via the proximal end of the channel **116** or first pushed sideways through a portion of the channel **116**) and into the guide catheter **206**.

[0052] The tubing system **300** fluidly couples the pressure source **106** to an aspiration lumen of the catheter **200** (e.g., the lumen of the guide catheter **206**). The tubing system **300** has a first portion **314** coupled to the pressure source **106**, a second portion **316** coupled to the catheter **200**, and a drainage portion **318** coupled to a reservoir **320** (e.g., a vinyl bag). The first portion **314**, second portion **316**, and/or drainage portion **318** can include one or more tubing sections (labeled individually as tubing sections **302***a*-**302***f*) and/or fluid control means, such as one or more control valves. For example, the first portion **314** can include tubing section **302***a*, the drainage portion **318** can include tubing section **302***b*, first valve **304**, and tubing section **302***c*, and the second portion **316** can include tubing section **302***d*, second valve **306**, tubing section **302***e*, stop-cock **310**, and tubing section **302***f*. The first valve **304** can be a one-way valve (e.g., a check valve) that only allows fluid flow from the first portion **314** to the drainage portion **318** (and not vice-versa). The second valve **306** can also be a one-way valve (e.g., a check valve) that only allows flow from the second portion **316** to the drainage portion **318** (and not vice-versa). A Y-connector **308** can fluidly couple the first, second and drainage portions **314**, **316**, **318**. In other embodiments, the first, second and/or drainage portions **314**, **316**, **318** can have more or fewer tubing sections, connectors and/or fluid control means and/or other suitable configurations.

[0053] As shown in FIGS. **4**A and **5**E, moving the lever **104** from the first position to the second position (indicated by arrow A**1**) simultaneously (1) generates a negative pressure in the aspiration lumen **205** of the guide catheter **206** (indicated by arrows F in FIG. **4**A and F**1** in FIG. **5**E), and (2) retracts the delivery sheath **204** and/or push member **202**, thereby retracting the ID from the treatment site. Specifically, when the lever **104** is rotated away from the housing **102** toward the second position, the first slider **140** moves axially in a proximal direction, thereby rotating the cam **138** (FIGS. **2**A-**2**B) and causing the locking portion **148** to engage the delivery sheath **204** and/or the push member **202** such that the delivery sheath **204** and/or push member **202** is trapped against the second slider **142** (FIGS. **2**A-**2**B) by the locking portion **148** of the cam **138**. Depending on the embodiment of the catheter **200**, the locking portion **148** can engage and secure the push member **202** directly or indirectly. For example, in those embodiments not including a delivery sheath **204**, the locking portion **148** can directly contact the push member **202** (and thus the push member **202** directly contacts the second slider **142**). In the embodiment shown in FIGS. **4**A-**4**B, the locking portion **148** directly contacts the delivery sheath **204** and exerts a compressive force on the delivery sheath **204** that affects the push member **202**, thereby also preventing axial movement of the push member **202**. In yet other embodiments, the actuation mechanism **103** and/or cam **138** can be configured such that the locking portion **148** exerts only enough force to trap the delivery sheath **204** and not the push member **202**.

[0054] Accordingly, as the lever **204** moves to the second position, the lever **204** pulls the delivery sheath **204** and/or push member **202** proximally while simultaneously generating a negative pressure (arrows F) in the aspiration lumen **205**. During this time, the guide catheter **206** remains fixed (by the housing **102**) relative to the delivery sheath **204** and push member **202**. As such, as the lever **204** moves from the first position to the second position, the ID, delivery sheath **204**, push member **202**, and clot material PE are drawn proximally into the guide catheter **206**.

[0055] As shown in FIG. **4**B, moving the lever **104** from the second position to the first position (indicated by arrow A**2**) creates a positive pressure (indicated by arrows F in FIG. **4**B)

in the first portion **314** and drainage portion **318** of the tubing system **300**. The second valve **306** prevents the positive pressure from affecting the aspiration lumen, thereby preventing the backflow of fluid into the blood vessel BV at the treatment site. With respect to the catheter system **200**, when the lever **104** is rotated from the second position to the first position, the first slider **140** moves distally (towards its starting position) without moving the delivery sheath **204** and push member **202**. Thus, the next time the lever **104** is rotated away from the housing **102**, the cam **138** (FIGS. **2**A-**2**B) will engage a new portion of the delivery sheath **204** and push member **202** such that the delivery sheath **204** and push member **202** are incrementally retracted proximally each time the lever **104** is "pumped" (e.g., moved from the first position to the second position and then back to the first position). Once the clot material PE is positioned within the guide catheter **206** such that a distal terminus of the clot material PE is proximal from a distal terminus of the guide catheter **206**, the catheter system **200** can be withdrawn proximally (indicated by arrow from the treatment site, as shown in FIG. **5**G) and removed from the patient.

[0056] Depending on the size of the thrombus, local anatomical and/or physiological conditions, and position of the ID relative to the clot material, the lever **104** can be pumped several times to fully extract the thrombus and/or ID from the treatment site. For example, FIGS. **5**D-**5**E show the proximal movement of the delivery sheath **204**, push member **202**, and ID after a first pump of the lever **104**. FIGS. **5**E-**5**F show the proximal movement of the delivery sheath **204**, push member **202**, and ID after a second pump of the lever **104** (second instance of pressure generation indicated by arrows F**1** and F**2** in FIGS. **5**E and **5**F, respectively). In some embodiments, the ID and clot material PE can be fully withdrawn into the guide catheter **206** after a single pump of the lever **104**. In other embodiments, such as those procedures where the ID is initially positioned such that a distal terminus of the ID is proximal of a distal terminus of the clot material PE (the clot material PE often originates in a vein of the patient's leg, and thus is cast into an elongated, worm-like shape), it can take several pumps of the lever **104** to fully withdraw the clot material PE into the guide catheter. Thus, in some embodiments, even when the ID is positioned within the guide catheter **206** such that a distal terminus of the ID is proximal of the distal terminus of the guide catheter **206**, the lever **104** can be pumped several more times to continue to withdraw the clot material PE into the guide catheter **206**.

[0057] It will be appreciated that the lever **104** need not move the entire distance from the first position to the second to generate pressure and retract the device. In some procedures, it may be beneficial for the clinician to move the lever **104** a portion of the distance between the first and second positions to effect a reduced retraction distance and/or reduced aspiration volume (as compared to a full movement from the first position to the second position). Likewise, the clinician can begin movement of the lever **104** towards the first position when the lever **104** is in any position (and not just from the second position). For example, a clinician can rotate the lever **104** from the first position to a position halfway between the first and second position, then move the lever **104** back to the first position.

[0058] The RA device **100** and associated methods and systems of the present technology provide several advantages over conventional systems. First, the RA device **100** of the present technology is configured to apply negative pressure only while the catheter system (or a component thereof) is being retracted. Therefore, when retraction pauses or stops altogether, aspiration also pauses or stops altogether. As such, aspiration is intermittent and discrete (e.g., non-continuous) and dependent upon retraction of a delivery sheath and/or interventional device. Such non-continuous, synchronized aspiration and retraction can be advantageous because it reduces the amount of fluid (e.g., blood and other fluids present in the blood vessel at the treatment site) withdrawn from the patient's body during treatment. Conventional automatic and/or continuous aspiration devices aspirate large volumes of blood that may then require the blood to be filtered and re-infused or otherwise replaced. Infusion of new or filtered blood complicates the procedure and may increase cost due to the need for a perfusionist.

[0059] The RA device **100** can complete a pass (e.g., from the first movement of the lever **104** toward the second position to the point where the ID and the clot have been withdrawn into the guide catheter **206** such that the distal termini of the ID and the clot are proximal of the distal terminus of the guide catheter) within 1 to 8 pumps or activations of the lever **104** (i.e., moving the lever **104** from the first position to the second position). In some embodiments, the RA device **100** can complete a pass within 3-6 activations of the lever **104**. Thus, in those embodiments where the pressure source **106** is a syringe having a 20 cc barrel, each pump of the lever **104** results in about 10 cc to about 20 cc of fluid removal (the actual usable volume of a 20 cc barrel can be closer to 15 cc to 18 cc). Accordingly, depending on the number of pumps of the lever **104** required in a pass (which depends on the size and density of the clot and the local anatomy and/or physiology), and again assuming a 20 cc barrel (although other volumes are within the scope of the present technology), the RA system **1000** and/or RA device **100** can aspirate between about 10 cc and about 300 cc of fluid per pass using a 20 cc syringe, and in some embodiments between about 20 cc and about 120 cc of fluid per pass. Moreover, the RA device **100** and/or the RA system **1000** provides an aspiration flow rate of between about 300 cc/min and 1500 cc/min, and in some embodiments between about 500 cc/min and about 1000 cc/min.

[0060] Another advantage is that the RA device **100** and/or RA system **1000** allows for simultaneous aspiration (through the catheter) and retraction of at least a portion of the catheter (e.g., an interventional device coupled to an elongated shaft of the catheter). The RA device **100** combines these functions in one, hand-held apparatus that makes it easier to use and more efficient than doing separate mechanical operations such as manual retraction and syringe aspiration. Doing manual retraction and syringe aspiration as has been known in the art is cumbersome and generally requires two people.

[0061] Additionally, the RA device **100** and associated systems and methods can rapidly reduce the Mean Resting Pulmonary Artery Pressure (MRPAP). In some embodiments, the RA device **100** and associated systems and methods may provide a greater reduction of MRPAP than existing treatments due to the rapid restoration of at least some blood flow, disruption or breakup of thrombus, increased thrombus surface area and removal of thrombus by aspiration and/or capture and retraction. It will be appreciated that the disruption and breakup of thrombus is a natural result of the engagement, retraction and aspiration with the RA system **100** and should be distinguished from conventional devices that actively cut small fragments from the thrombus when the device expands

and capture these fragments inside the device. In some embodiments, MRPAP may be reduced shortly after deployment or within about 1 hour after deployment, herein referred to as "acute MRPAP reduction". In some embodiments, this acute MRPAP reduction may be between about 10% and about 30%. In some embodiments, MRPAP reduction may be between about 20% to about 50% after about 8 hours post procedure. This may be a substantially faster reduction of MRPAP than thrombolytic drug therapy or thrombolysis systems can provide. In the European Heart Journal, Engelberger et al. reported MRPAP reduction in pulmonary embolism patients of about 32% at 24 hours post-procedure with an EkoSonic MACH4 Endovascular Systems (EKOS Corporation; Bothell, Wash.) and thrombolytic drug rtPA. After 24 hours, the method and device in accordance with the present invention may, in some embodiments reduce MRPAP by about 35% to about 50% and in other embodiments by about 40% to about 60%.

[0062] Yet another advantage of the RA device **100** of the present technology is its ability to provide tactile feedback to the clinician so that the clinician can gauge tension on the push member **202**. For example, if the clot PE is stuck (for any reason), the clinician can feel resistance in the lever **104** as the clinician attempts to move the lever **104** to the second position. Based on this feedback, the clinician may decide to stop the procedure and/or readjust a portion of the catheter system **200**. Additionally or alternatively, one or more embodiments of the RA device **100** and/or RA system **1000** can include an automatic force feedback system that monitors the retraction force and automatically limits tension on the push member **202** and/or electromechanically releases the secured catheter component from the locking portion **148**.

III. Selected Embodiments of Clot Treatment Devices

[0063] Although the RA system **1000** is described herein with reference to the catheter **200** coupled to the ID, the RA system **1000** and/or RA device **100** is configured for use with any catheter configured to support any ID. Examples of additional interventional devices, such as clot treatment devices, for use with the RA device **100** and/or RA system **1000** are detailed below.

[0064] FIGS. **6-7** show one embodiment of a clot treatment device **700** (also referred to herein as the "device **700**") configured in accordance with the present technology, shown in a delivery state (constrained by the delivery sheath **204**) and deployed state, respectively. As shown in FIGS. **6-7**, the device **700** can include a self-expanding mesh **701** having a blunt distal tip **702**. In some embodiments, the mesh **701** can be a braid of wires that are superelastic and/or made of shape memory material (e.g., nitinol, a cobalt chrome alloy, etc.). The distal termini of wires of the mesh **701** are secured by the distal tip **702**, and the proximal termini of the wires of the mesh **701** can be fixed (directly or indirectly via an attachment member) to the push member **202** (FIGS. **4A-4B**). In the illustrated embodiment, each of the push member **202** and the distal tip **702** define a central lumen for receiving a guidewire. In some embodiments, the device **700** can include a flexible sleeve (not shown) extending between the push member **202** and the distal tip **702**. A proximal portion of the sleeve can be slidably positioned within the lumen of the push member **202**, and a distal portion of the sleeve can be fixed to the distal tip **702**. The sleeve and the elongated member **202** can have a telescoping arrangement such that, when the device **700** is deployed, the mesh **701** can elongate, compress, and flex along its longitudinal axis while still having the additional column support provided by the flexible sleeve.

[0065] Referring to FIG. **7**, the mesh **701** can be generally cylindrical with a series of radially extending portions **706** situated along the axis of the device **700** and separated by a corresponding series of cylindrical portions **704**. The mesh **701** can include a series of capture portions **708** between successive radially extending portions **706**. Each capture portion **708** can be bound by the outer surface of the corresponding cylindrical portion **704** between the successive radially extending portions **706** and an imaginary outer periphery (shown as a dashed line) extending linearly between the radially-furthest portions of the successive radially extending portions **706**.

[0066] The individual lengths L, of the radially extending portions can be less than the individual lengths L of the cylindrical portions **704** that separate the radially extending portions **706**. The portions of the mesh **701** proximal and distal to the proximal-most and distal-most radially extending portions **706**, respectively, can have the same or different lengths, and can individually have lengths that are greater than, less than, or the same as the lengths of the cylindrical portions **704**. The radially extending portions **706** provide a greater surface area along the device **700** than would a device without such portions (e.g., a device that is uniformly cylindrical with the same outside diameter as the cylindrical portions **704**). As made clear by FIG. **7**, the surface area to length ratio of each of the radially extending portions **706** is greater than the surface area to length ratio of each of the cylindrical portions **704**. Accordingly, the radially extending portions **706** provide the mesh **701** with an increased surface area for engaging and/or gripping adjacent clot material, while the greater surface area to length ratio of the radially extending portions **706** versus the cylindrical portions **704** increases the volume of the capture portions **708**, thus increasing the volume of clot material that can be trapped within the capture portions **708**.

[0067] In the deployed state, the radially extending portions **706** can be sized to generally match the diameter of the target blood vessel (e.g., a pulmonary blood vessel, a cerebral blood vessel, etc.). In some embodiments, the radially extending portions **706** can individually have diameters slightly greater than the diameter of the target vessel so as to apply greater radial force against the blood vessel (without causing trauma). Similarly, in those circumstances involving smaller and/or delicate blood vessels, the radially extending portions **706** can have a diameter that is less than the diameter of the vessel at the target treatment site. It is contemplated that different sizes of the device **700** will be available for selection by the clinician for a particular presentation of the patient. Individual radially extending portions can have the same or different diameters.

[0068] Although four radially extending portions **706** and three cylindrical portions **204** are shown in FIG. **7**, in other embodiments the mesh **701** can have more or fewer radially extending portions **706** and/or cylindrical portions **704**. For example, in some embodiments the device **700** can have three radially extending portions **704** and two cylindrical portions **704**. Moreover, although each of the radially extending portions **706** is generally disc-shaped in FIG. **7**, in other embodiments the radially extending portions **706** can have other shapes and/or sizes so long as the surface area to length ratio of at least two successive radially-extending portions **706**

remains greater than the surface area to length ratio of the corresponding cylindrical portion **704**.

[0069] The generally cylindrical shape of the mesh **701** provides a flow lumen for blood across a clot during a clot treatment procedure. However, the clot treatment device **700** and/or mesh **701** can have other shapes, sizes, and/or configurations. For example, the mesh **701** and/or one or more portions of the mesh **701** (such as the cylindrical portions **704**) can have a shape that is generally conical, generally concave or generally convex along its axis, so long as the shape provides the aforesaid lumen for blood flow.

[0070] FIGS. **8**A-**8**F show a method of using the clot treatment device **700** to treat a thromboembolism. As shown in FIG. **8**A, a guidewire GW is extended through the clot in the blood vessel L. As shown in FIG. **8**B, the guide catheter **206** can then be fed distally over the guidewire GW and moved to a location such that a distal terminus of the guide catheter **206** is positioned proximal to a distal terminus of the clot E. At this point, the guidewire GW can optionally be withdrawn. However, in a particular embodiment shown in FIG. **8**C, the guidewire GW remains and the delivery catheter **204** is then moved through the guide catheter **206** over the guidewire GW and pushed through the clot E.

[0071] Referring to FIG. **8**D, the guidewire GW is then withdrawn and the clot treatment device **700** is then moved through the delivery sheath **204** until the clot treatment device **700** is disposed proximate the distal terminus of the delivery sheath **204**. The delivery sheath **204** is then retracted in a proximal direction while maintaining forward pressure on the clot treatment device **700** via the pusher member **202** so that the clot treatment device **700** becomes exposed and released from the delivery sheath **204**. The clot treatment device **700** radially expands into the clot E and, in one embodiment, at least a portion of the clot treatment device **700** expands distally of the clot E. As shown in FIG. **8**E, in some embodiments at least one of the radially extending portions **706** of the clot treatment device **700** are located distal to the clot E upon expansion of the clot treatment device **700**.

[0072] It will be appreciated that upon expansion of the clot treatment device **700** as just described, fluid flow (e.g., blood flow) through the clot E is restored. This is depicted with arrows in FIG. **8**E. More specifically, blood is now free to move through the mesh **701** of the clot treatment device **700** and exit the clot treatment device **700** distal to the clot E. As a result, the acute condition of blockage is corrected thus immediately improving the circulation of oxygenated blood in the patient.

[0073] The restoration of blood flow is anticipated to equate with restoration of a substantial portion of the normal blood flow rate for the patient. In less severe, i.e., "sub massive," pulmonary embolism patients, the clot treatment device **700** may increase blood flow rate by at least about 50 ml/min, at least about 150 ml/min or between about 100 to 250 ml/min. In severe, i.e., "massive," pulmonary embolism patients, a larger amount of the pulmonary artery flow is compromised. Hence, in some embodiments, at least about 500 ml/min of blood flow rate may be restored. Moreover, at least a portion of the flow restoration is expected to occur prior to the removal of the clot E, or any portion thereof.

[0074] After the clot treatment device **700** has been expanded and blood flow restored, the clinician retracts the clot treatment device **700** in a proximal direction, as shown in FIG. **8**F. In one embodiment, the clot treatment device **700** and the delivery sheath **204** are pulled back simultaneously into the guide catheter **206**, followed by the entire apparatus (i.e., clot treatment device **700**, push member **202**, delivery sheath **204** and guide catheter **206**) being withdrawn through the heart and the venous circulation and out from the body.

[0075] FIG. **9**A is a perspective view of another embodiment of a clot treatment device **800** (also referred to herein as the "device **800**") in an unrestricted expanded or deployed state that is well suited for removing clot material from a blood vessel (e.g., a pulmonary blood vessel). FIG. **9**B is an enlarged, isolated side view of a clot engagement member **802** shown in FIG. **9**A. Referring to FIGS. **9**A-**9**B together, the device **800** can include a support member **804** and groups **802***a-f* of clot engagement members **202** spaced along the support member **804**. Within each group **802***a-f*, individual clot engagement members **802** can be positioned about the circumference of the support member **804**. Individual clot engagement members **802** can have a first portion **806** (FIG. **9**B) coupled to the support member **804** by a hub **810** (labeled individually in FIG. **9**A as **810***a-f*) and a second portion **808** extending distally from the first portion **806** and free to move relative to the support member **804**. In the delivery state (not shown), the clot engagement members **802** can be generally linear and extend generally parallel to the support member **804**. In the expanded state, as shown in FIGS. **9**A-**9**B, the clot engagement members **802** can project radially outwardly relative to the support member **804** in a curved shape.

[0076] As best shown in FIG. **9**B, the second portions **808** of the clot engagement members **802** can have a proximally facing section **812** which defines a proximally facing concave portion and, in some embodiments, the clot engagement members **802** can further include an end section **814** that curves radially inwardly from the proximally facing section **812**. In a particular embodiment, a distal portion of the first portion **806** can extend distally of the corresponding hub **810***a-f*; however, in such embodiments, such distal portions of the clot engagement members **802** are relatively short (e.g., less than about 10 mm). When deployed within a blood vessel adjacent to clot material, the clot engagement members **802** are configured to penetrate the clot material along an arcuate path and hold clot material to the device **800**, as discussed in greater detail below with reference to FIGS. **10**A-**10**K.

[0077] In some embodiments, the groups **802***a-f* can be evenly spaced along the support member **804**, and in other embodiments the groups **802***a-f* can have any spacing or state along the support member **804**. Additionally, the arcuate clot engagement members **802** at one group (any of **802***a-f*) can have a different size than the arcuate clot engagement members **802** at a different group (any of **802***a-f*). The groups **802***a-f* can be deployed or expanded simultaneously (e.g., via a push-wire or other deployment methods) or consecutively (e.g., by retracting a sheath).

[0078] Individual clot engagement members **802** can be made from a shape memory material such that when the clot engagement members **802** are unconstrained, the clot engagement members **802** assume a preformed curved shape. As shown in FIG. **9**B, the second portion **808** can have an arcuate shape that includes an outwardly extending section **816**, the proximally facing section **812** extending from the outwardly extending section **816**, and the end section **814** extending from the proximally facing section **812**. In one embodiment, the demarcation between the proximally facing section **812** and the end section **814** occurs at an apex **818** of the second portion **808**. The proximally facing section **812** is configured to retain clot material with the clot engagement member **802**

as the device **800** is pulled proximally through the vessel (arrow P), and the apex **818** provides a smooth curve that can atraumatically slide along the vessel wall as the device **800** is pulled proximally through the vessel. In the embodiment shown in FIG. **9**B, the second portion **808** of the clot treatment device **800** can have a single or constant radius of curvature R_1. In other embodiments, such as the clot engagement member **402** shown in FIG. **9**C, the second portions **808** can have a plurality of radii of curvature, such as a first region with a first radius of curvature R_1 and a second region with a second radius of curvature R_2. In the embodiment shown in FIGS. **9**A-**9**B, the second portions **808** of the clot engagement members **802** have a single radius of curvature that is the same for all of the clot engagement members **802** in all groups **802***a-f* and/or within a subset of groups **802***a-f*. In other embodiments, within the same group (any of **802***a-f*) or amongst groups **802***a-f*, the second portions **808** can have a constant radius of curvature and/or a plurality of radii of curvature (as shown in FIG. **9**C). Moreover, in additional embodiments the device **800** can include a first group (any of **802***a-f*) of having second portions **808** with a first radius of curvature and a second group (any of **802***a-f*) having second portions **808** with a second radius of curvature different than the first radius of curvature. In some embodiments, the radius R_1 of the clot engagement members **802** can be between about 1.5 mm and about 12 mm, and in some embodiments, between about 2 mm and about 12 mm.

[0079] As shown in FIG. **9**C, the arc length a of the clot engagement members **802** may be substantially greater than 180 degrees to provide several benefits in performance of clot engagement and retrieval. In particular, a greater are length a can provide improved clot engagement during retraction when resistance due to clot friction and interference with the vessel wall deflects the clot engagement member **802** distally. A greater arc length a may provide more deflection and/or unraveling or straightening of the arcuate shape without loss of engagement with the clot. In some embodiments, the arc length a of the clot engagement members **802** can be greater than about 800 degrees. In some embodiments the are length a of the clot engagement members **802** may be between about 800 degrees and 340 degrees and between about 240 degrees and 300 degrees in other embodiments. It can be advantageous to keep the arc length a under about 360 degrees so as to avoid overlap of the clot engagement member **802**. Greater arc length a can allow for the use of smaller clot engagement member filaments or wires that may be particularly beneficial for minimization of the collapsed profile of the device. Greater arc length a can also allow for a larger total number of clot engagement members **802** that also enhance the ability of the device to remove embolic material from a vessel. Moreover, in some embodiments, the distal end of the clot engagement members **802** may define an angle with respect to the axis of the support member and/or the straight portion of the engagement members (as shown in FIG. **9**C). This angle may be between about 30 degrees and about 90 degrees, and in some embodiments between about 40 degrees and about 80 degrees.

[0080] The clot engagement members **802** can be made from a variety of materials. In a particular embodiment, the clot engagement members **802** comprise a material with sufficient elasticity to allow for repeated collapse into an appropriately sized catheter and full deployment in a blood vessel. Such suitable metals can include nickel-titanium alloys (e.g., Nitinol), platinum, cobalt-chrome alloys. Elgiloy, stainless steel, tungsten, titanium and/or others. Polymers and metal/polymer composites can also be utilized in the construction of the clot engagement members. Polymer materials can include Dacron, polyester, polyethylene, polypropylene, nylon, Teflon, PTFE, ePTFE, TFE, PET, TPE, PLA silicone, polyurethane, polyethylene, ABS, polycarbonate, styrene, polyimide, PEBAX, Hytrel, polyvinyl chloride, HDPE, LDPE, PEEK, rubber, latex and the like. In some embodiments, the clot engagement members **802** may comprise an environmentally responsive material, also known as a smart material. Smart materials are designed materials that have one or more properties that can be significantly changed in a controlled fashion by external stimuli, such as stress, temperature, moisture, pH, electric or magnetic fields.

[0081] In some embodiments, portions of the exterior surfaces of the support member **804** and/or clot engagement members **802** may be textured, or the exterior surfaces can include microfeatures configured to facilitate engagement or adhesion of thrombus material (e.g., ridges, bumps, protrusions, grooves, cut-outs, recesses, serrations, etc.). In some embodiments, the clot engagement members **802** may be coated with one or more materials to promote platelet activation or adhesion of thrombus material. Adhesion of thrombi to clot engagement members **802** may facilitate capture and/or removal.

[0082] In some embodiments, the clot treatment device **800** can include between about 8 and about 80 clot engagement members **802**, and in some embodiments, between about 12 and about 60 clot engagement members **802**. In a particular embodiment, the clot treatment device **800** can include between about 16 and about 40 clot engagement members **802**. The clot engagement members **802** can individually have one consistent diameter or have a variety of diameters (among the members **802**) along their lengths. In addition, an individual clot engagement member **802** may have a tapered or varying diameter along its length to provide desired mechanical characteristics. The average diameter of the clot engagement members **802** can be between about 0.1 mm to about 0.2 mm in some embodiments and in a particular embodiment, between about 0.12 mm and 0.16 mm.

[0083] In any of the embodiments described herein, the clot engagement members **802** can be formed from a filament or wire having a circular cross-section. Additionally, the clot engagement members **802** can be formed from a filament or wire having a non-circular cross-section. For example, filaments or wires having square, rectangular and oval cross-sections may be used. In some embodiments, a rectangular wire (also known as a "flat wire") may have a height or radial dimension of between about 0.05 mm to about 0.2 mm. In some embodiments, a rectangular wire may have a width or transverse dimension of between about 0.08 mm to about 0.3 mm. In some embodiments, a rectangular wire may have a height to width ratio of between about 0.3 to about 0.9 and between about 1 and about 1.8.

[0084] FIGS. **10**A-**10**K illustrate one example for treating an embolism (e.g., a pulmonary embolism) with the clot treatment device **800** (and delivery system **910**). FIG. **10**A is a side view of a delivery system **910** positioned adjacent to an embolism or clot material PE within a pulmonary blood vessel V. As shown in FIG. **10**A, the delivery sheath **204** containing the collapsed clot treatment device **800** (not shown) can be advanced together with the guide catheter **206** over the guidewire to the treatment site. For example, the guidewire can be inserted through the target pulmonary embolism PE.

Referring to FIG. **10**B, a distal portion of the guide catheter **206** and/or delivery sheath **204** can then be advanced through the pulmonary embolism PE such that the distal ends **801** of at least one group of the clot engagement members **802** are aligned with or positioned distal to a distal edge of the pulmonary embolism PE. In other embodiments (not shown), a distal portion of the guide catheter **206** and/or delivery sheath **204** can be positioned such that the distal ends **801** of at least one group of the clot engagement members **802** are positioned proximal to a distal edge of the pulmonary embolism PE.

[0085] Once the device is positioned, the guidewire can then be removed proximally through a lumen of the delivery sheath **204** and/or guide catheter **206**, and the delivery sheath **204** can be pulled proximally to a position proximal of the pulmonary embolism PE (as shown in FIG. **10**B). As shown in FIGS. **10**C-**10**G, the delivery sheath **204** can be retracted proximally to expose the distal portions of the second portions **808** of the clot engagement members such that the exposed portions radially expand and bend backwards in a proximal direction. As the second portions **808** expand, they extend into the pulmonary embolism PE around the device along an arcuate path P. The arcuate path P can extend radially outward and proximally with respect to the support member (not shown) and, as shown in FIG. **10**F, can eventually curve radially inwardly. The second portions **808** can thus form hook-like capture elements that penetrate into and hold clot material to the device **800** for subsequent removal. Moreover, should the second portions **808** extend radially outwardly enough to touch the vessel wall, the end sections **814** of the second portions **808** form an atraumatic surface that can abut or apply pressure to the vessel wall without damaging the vessel wall. In some embodiments, the device presents a plurality of arcuate members that may be substantially parallel with the axis of the device at the point of contact with the vessel wall when in the deployed state.

[0086] In some embodiments, the delivery sheath **204** can be withdrawn so as to expose only a portion of the clot engagement members. Additionally, in those embodiments having two or more groups of clot engagement members, the delivery sheath **204** can be withdrawn to expose all or some of the groups of clot engagement members. As shown in FIG. **10**G, the delivery sheath **204** can continue to be withdrawn proximally to expose additional second portions **808** and/or groups of clot engagement members **802***a-f*. Clot engagement members **802***a-f* may just contact or be slightly deflected by the vessel wall. If the device is sized such that the diameter of the clot engagement members are larger than the vessel diameter (e.g., "over-sized"), the clot engagement members may be compressed by the vessel wall. Thus, while fully deployed, the device may be in state of a small amount of radial compression. In some embodiments, the device may be diametrically over-sized by between about 5% and 50% and in other embodiments between about 10% and 25%.

[0087] As shown in FIGS. **10**H-**10**K, once at least a portion of the clot engagement members and/or second portions **808** have penetrated and engaged the targeted clot material PE, the clot treatment device **800** can be withdrawn proximally, thereby pulling at least a portion of the clot material PE in a proximal direction with the device **800**. For example, the push member **202** and delivery sheath **204** can be retracted proximally at the same time and rate. As such, the guide catheter **206** can be held in place while the delivery sheath **204**, clot material PE, and clot treatment device **800** are pulled proximally into the guide catheter **206**. The curved shape of the second portions **808** increases the surface area of the clot engagement members **802** in contact with the clot material PE, thus increasing the proximal forces exerted on the clot material. Withdrawal of the device **800** not only removes the clot but also can increase blood flow through the vessel.

[0088] In some embodiments, the catheter system **200** and/or ID can be a device commonly known as a "stent retriever." Exemplary stent retrievers that may be utilized with the RA system **1000** and/or RA device **100** include the Trevo XP ProVue Retriever, commercially available from Stryker Neurovascular (Freemont, Calif.), the Solitaire FR revascularization device, commercially available from Medtronic Covidien (Dublin, Ireland) and the Revive SE clot removal device, commercially available in Europe from Johnson and Johnson Codman Neuro (Raynham, Mass.). The devices typically comprise a self-expanding, fenestrated framework or mesh. Exemplary designs are shown in U.S. Pat. No. 8,795,317 to Grandfield et al., U.S. Pat. No. 8,940,003 to Slee et al., and U.S. Pat. No. 8,679,142 to Slee et al., all of which are incorporated herein by reference in their entireties. For example, in some embodiments, the stent retriever can comprise a self-expandable mesh structure comprising a first plurality of mesh cells. In some embodiments, the stent retriever is reversibly self-expandable, and in a particular embodiment, the stent retriever is fully retrievable or retractable. The mesh structure can have a proximal portion, a distal portion, and a tapering portion comprising a second plurality of mesh cells. The tapering portion can be disposed toward the proximal portion of the mesh structure. The tapering portion can converge at a connection point located at a proximal end of the tapering portion. The mesh structure can be pre-formed to assume a volume-enlarged form and, in the volume-enlarged form, take the form of a longitudinally open tube tapering toward the connection point.

[0089] Additional embodiments of clot treatment devices for use with the RA device **100** and/or RA system **1000** are described in U.S. patent application Ser. No. 14/299,933, filed Jun. 9, 2014, U.S. patent application Ser. No. 14/299,997, filed Jun. 9, 2014, U.S. patent application Ser. No. 13/843,742, filed Mar. 15, 2013, and U.S. patent application Ser. No. 14/288,778, filed May 28, 2014, all of which are incorporated herein by reference in their entireties. In some embodiments, the RA system **1000** and/or RA device **100** may be combined with a catheter and a clot treatment device that is configured to treat an embolus in the cerebrovasculature or acute stroke.

[0090] Although the invention has been described in terms of particular embodiments and applications, one of ordinary skill in the art, in light of this teaching, can generate additional embodiments and modifications without departing from the spirit of or exceeding the scope of the exampled invention. Accordingly, it is to be understood that the drawings and descriptions herein are proffered by way of example to facilitate comprehension of the invention and should not be construed to limit the scope thereof.

I/We claim:

1. An apparatus for use with a catheter system, wherein the catheter system enables intravascular delivery of an interventional device to a treatment site in a blood vessel, the apparatus comprising:

a housing configured to be releasably coupled to a proximal portion of the catheter system;

an actuation mechanism coupled to the housing, wherein the actuation mechanism includes—

a lever movably coupled to the housing;

a locking portion configured to engage a portion of the catheter system;

a pressure source coupled to the housing and the actuation mechanism; and

wherein movement of the lever simultaneously—

activates the pressure source to generate pressure, and

moves the locking portion to engage and retract at least a portion of the catheter system.

2. The apparatus of claim **1** wherein the pressure source is configured to be manually operated.

3. The apparatus of claim **1** wherein the pressure source is an automatic pressure source that is configured to intermittently generate negative pressure.

4. The apparatus of claim **1** wherein the blood vessel is a pulmonary artery.

5. The apparatus of claim **1** wherein the blood vessel is a cerebral blood vessel.

6. A system for extracting thrombus from a blood vessel of a human patient, the system comprising:

a catheter including—

a first elongated shaft having proximal portion and a distal portion, wherein an inner surface of the first elongated shaft defines a lumen,

a second elongated shaft positioned at least partially within the lumen of the first elongated shaft, wherein the second elongated shaft has a proximal portion and a distal portion, and

a treatment device coupled to the distal portion of the second elongated shaft;

a pressure source;

a tubing system coupled to the lumen and the pressure source;

a retraction and aspiration device including an actuation mechanism configured to be coupled to the pressure source and at least one of the first and/or second elongated shafts, wherein the actuation mechanism includes a lever; and

wherein movement of the lever simultaneously generates a negative pressure in the lumen and retracts the second elongated shaft.

7. The system of claim **6** wherein:

the treatment device comprises an expandable braided structure having a delivery state and a deployed state,

when the treatment device is in the deployed state, the treatment device includes a plurality of radially extending portions and at least one cylindrical portion, wherein the cylindrical portion is between a pair of the radially extending portions, and

wherein the treatment device is configured to be delivered to a treatment site within a pulmonary blood vessel to remove clot material from the treatment site.

8. The system of claim **6** wherein:

the treatment device comprises an expandable braided structure having a delivery state and a deployed state,

when the treatment device is in the deployed state, the treatment device includes a plurality of radially extending portions and at least one cylindrical portion, wherein the cylindrical portion is between a pair of the radially extending portions, and

wherein the treatment device is configured to be delivered to a treatment site within a cerebral blood vessel to remove clot material from the treatment site.

9. The system of claim **6** wherein the treatment device comprises:

a support member;

a first plurality of arcuate clot engagement members configured to deploy at a first location along the support member;

a second plurality of arcuate clot engagement members configured to deploy at a second location along the support member proximal of the first location;

wherein, when in the deployed state, the individual clot engagement members of the first and second pluralities of clot engagement members extend radially outward, then proximally with respect to the support member, then curve radially inwardly;

wherein the treatment device is configured to be delivered to a treatment site within a pulmonary blood vessel to remove clot material from the treatment site.

10. The system of claim **6** wherein the treatment device comprises:

a support member;

a first plurality of arcuate clot engagement members configured to deploy at a first location along the support member;

a second plurality of arcuate clot engagement members configured to deploy at a second location along the support member proximal of the first location;

wherein, when in the deployed state, the individual clot engagement members of the first and second pluralities of clot engagement members extend radially outward, then proximally with respect to the support member, then curve radially inwardly;

wherein the treatment device is configured to be delivered to a treatment site within a cerebral blood vessel to remove clot material from the treatment site.

11. A method for the intravascular treatment of clot material from a treatment site within a pulmonary vessel of a human patient, the method comprising:

providing a retraction and aspiration device having an actuation mechanism, wherein the actuation mechanism is configured to be coupled to a pressure source and a proximal portion of a catheter, wherein the catheter includes an elongated shaft configured to be intravascularly positioned at the treatment site and an elongated member positioned within a lumen of the elongated shaft, wherein a distal portion of the elongated member includes a treatment device; and

activating an actuation mechanism to simultaneously generate a negative pressure within the lumen of the elongated shaft via the pressure source and retract the elongated member; and

incrementally drawing the capture device and the clot material into the lumen of the elongated shaft.

12. The method of claim **11** wherein activating an actuation mechanism includes moving a lever coupled to the retraction and aspiration device.

13. The method of claim **11** further comprising continuing to draw the clot material into the lumen of the elongated shaft when a distal terminus of the treatment device is spaced proximally from a distal terminus of the elongated shaft.

14. The method of claim **11** wherein activating the actuation mechanism occurs at a first time and wherein the method

further comprises activating the actuation mechanism at a second time, and wherein the method further comprises:

removing between 10 cc and 80 cc of fluid from the treatment site during the first activation of the actuation mechanism; and

removing between 10 cc and 80 cc of fluid from the treatment site during the second activation of the actuation mechanism.

15. The method of claim **11** wherein the treatment device comprises an expandable braided structure having a delivery state and a deployed state, wherein, when the treatment device is in the deployed state, the treatment device includes a plurality of radially extending portions and at least one cylindrical portion, wherein the cylindrical portion is between a pair of the radially extending portions.

16. The method of claim **11** wherein the treatment device comprises:

a support member;

a first plurality of arcuate clot engagement members configured to deploy at a first location along the support member;

a second plurality of arcuate clot engagement members configured to deploy at a second location along the support member proximal of the first location; and

wherein, when in the deployed state, the individual clot engagement members of the first and second pluralities of clot engagement members extend radially outward, then proximally with respect to the support member, then curve radially inwardly.

17. The method of claim **11** wherein the treatment device is a stent retriever.

18. A method for the intravascular treatment of clot material from a treatment site within a cerebral vessel of a human patient, the method comprising:

providing a retraction and aspiration device having an actuation mechanism, wherein the actuation mechanism is configured to be coupled to a pressure source and a proximal portion of a catheter, wherein the catheter includes an elongated shaft configured to be intravascularly positioned at the treatment site and an elongated member positioned within a lumen of the elongated shaft, wherein a distal portion of the elongated member includes a treatment device; and

activating an actuation mechanism to simultaneously generate a negative pressure within the lumen of the elongated shaft via the pressure source and retract the elongated member; and

incrementally drawing the capture device and the clot material into the lumen of the elongated shaft.

19. The method of claim **18** wherein activating an actuation mechanism includes moving a lever coupled to the retraction and aspiration device.

20. The method of claim **18** further comprising continuing to draw the clot material into the lumen of the elongated shaft when a distal terminus of the treatment device is spaced proximally from a distal terminus of the elongated shaft.

21. The method of claim **18** wherein activating the actuation mechanism occurs at a first time and wherein the method further comprises activating the actuation mechanism at a second time, and wherein the method further comprises:

removing between 20 cc and 80 cc of fluid from the treatment site during the first activation of the actuation mechanism; and

removing between 20 cc and 80 cc of fluid from the treatment site during the second activation of the actuation mechanism.

22. The method of claim **18** wherein the treatment device comprises an expandable braided structure having a delivery state and a deployed state, wherein, when the treatment device is in the deployed state, the treatment device includes a plurality of radially extending portions and at least one cylindrical portion, wherein the cylindrical portion is between a pair of the radially extending portions.

23. The method of claim **18** wherein the treatment device comprises:

a support member;

a first plurality of arcuate clot engagement members configured to deploy at a first location along the support member;

a second plurality of arcuate clot engagement members configured to deploy at a second location along the support member proximal of the first location; and

wherein, when in the deployed state, the individual clot engagement members of the first and second pluralities of clot engagement members extend radially outward, then proximally with respect to the support member, then curve radially inwardly.

24. The method of claim **18** wherein the treatment device is a stent retriever.

* * * * *