US006481439B1

(12) **United States Patent**
**Lewis et al.**

(10) **Patent No.: US 6,481,439 B1**
(45) **Date of Patent: *Nov. 19, 2002**

(54) **METHODS AND SYSTEMS FOR TREATING ISCHEMIA**

(75) Inventors: **Brian Douglas Lewis**, Stanford; **Lee R. Bolduc**, Mountain View, both of CA (US)

(73) Assignee: **Salient Interventional Systems, Inc.**, Cupertino, CA (US)

( * ) Notice: Subject to any disclaimer, the term of this patent is extended or adjusted under 35 U.S.C. 154(b) by 0 days.

This patent is subject to a terminal disclaimer.

(21) Appl. No.: **09/377,788**

(22) Filed: **Aug. 20, 1999**

**Related U.S. Application Data**

(63) Continuation of application No. 09/311,903, filed on May 14, 1999, now Pat. No. 6,295,990, which is a continuation-in-part of application No. 09/243,578, filed on Feb. 3, 1999, now abandoned, which is a continuation-in-part of application No. 09/018,214, filed on Feb. 3, 1998, now Pat. No. 6,044,845.

(51) **Int. Cl.**[7] ..... **A61B 19/00**

(52) **U.S. Cl.** ..... **128/898**; 604/4.01; 604/7; 604/8; 604/4; 604/48; 604/500

(58) **Field of Search** ..... 128/898; 604/4, 604/7, 8, 48, 500, 50, 51, 52, 53, 96, 102

(56) **References Cited**

U.S. PATENT DOCUMENTS

| | | | |
|---|---|---|---|
| 1,982,852 | A | 12/1934 | Bergstrom et al. |
| 3,081,495 | A | 3/1963 | Kovatch |
| 3,297,819 | A | 1/1967 | Wetmore |
| 3,579,822 | A | 5/1971 | Dietrich |
| 3,882,590 | A | 5/1975 | Mazelsky |
| 3,989,602 | A | 11/1976 | McCandless et al. |
| 4,103,689 | A | 8/1978 | Leighton |
| 4,221,457 | A | 9/1980 | Allen et al. |
| 4,468,216 | A | 8/1984 | Muto |
| 4,564,014 | A | 1/1986 | Fogarty et al. |
| 4,661,094 | A | 4/1987 | Simpson |
| 4,666,426 | A | 5/1987 | Aigner |
| 4,698,890 | A | 10/1987 | Neaves |
| 4,804,358 | A | 2/1989 | Karcher et al. |

(List continued on next page.)

FOREIGN PATENT DOCUMENTS

| | | |
|---|---|---|
| CA | 1322315 | 9/1993 |
| DE | 3731590 | 7/1988 |
| DE | 3731590 C1 | 7/1988 |
| EP | 0476796 B1 | 3/1992 |
| EP | 0476796 | 3/1992 |
| WO | WO 83/01893 | 6/1983 |
| WO | WO 88/06865 | 9/1988 |
| WO | WO 92/20398 | 11/1992 |
| WO | WO 97/19713 | 6/1997 |
| WO | WO 97/49447 | 12/1997 |
| WO | WO 00/13734 | 3/2000 |

*Primary Examiner*—David J. Isabella
*Assistant Examiner*—Urmi Chattopadhyay
(74) *Attorney, Agent, or Firm*—Hoekendijk & Lynch, LLP

(57) **ABSTRACT**

Methods for treating total and partial occlusions employ a perfusion conduit which is penetrated through the occlusive material. Oxygenated blood or other medium is then perfused through the conduit in a controlled manner, preferably at a controlled pressure below the arterial pressure, to maintain oxygenation and relieve ischemia in tissue distal to the occlusion. In another aspect, interventional devices, such as stents or balloon catheters, are passed through the perfusion catheter to remove obstructions. Optionally, the occlusion may be treated while perfusion is maintained, typically by introducing a thrombolytic or other agent into the occlusive material using the perfusion conduit or by employing mechanical means to remove the obstruction. Such methods are particularly suitable for treating acute stroke to prevent damage to the cerebral tissue.

**34 Claims, 22 Drawing Sheets**

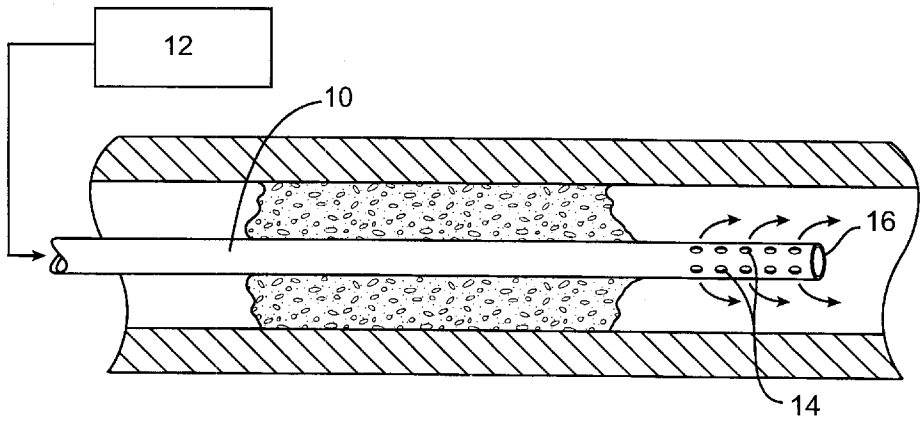


IMPERATIVE Ex. 1018
IPR Petition - US 11,744,691

U.S. PATENT DOCUMENTS

4,846,174 A 7/1989 Willard et al.
4,850,969 A 7/1989 Jackson
4,873,978 A 10/1989 Ginsburg
4,921,478 A 5/1990 Solano et al.
4,921,483 A 5/1990 Wijay et al.
4,926,858 A 5/1990 Gifford et al.
5,005,755 A 4/1991 Takahashi et al.
5,011,468 A 4/1991 Lundquist et al.
5,011,469 A 4/1991 Buckberg et al.
5,066,282 A 11/1991 Wijay et al.
5,090,960 A 2/1992 Don Michael
5,106,363 A 4/1992 Nobuyoshi
5,147,315 A 9/1992 Weber
5,149,321 A 9/1992 Klatz et al.
5,158,540 A 10/1992 Wijay et al.
5,180,387 A 1/1993 Ghajar et al.
5,184,627 A 2/1993 de Toledo
5,186,713 A 2/1993 Raible
5,250,034 A 10/1993 Appling et al.
5,341,555 A 8/1994 Warden et al.
5,364,344 A 11/1994 Beattie et al.
5,403,274 A 4/1995 Cannon
5,405,322 A 4/1995 Lennox et al.
5,407,424 A 4/1995 LaFontaine et al.
5,425,723 A 6/1995 Wang
5,445,624 A 8/1995 Jimenez
5,451,207 A 9/1995 Yock
5,462,523 A 10/1995 Samson et al.
5,496,294 A 3/1996 Hergenrother
5,505,710 A 4/1996 Dorsey, III
5,531,715 A 7/1996 Engelson et al.
5,533,957 A 7/1996 Aldea
5,571,086 A 11/1996 Kaplan et al.
5,584,803 A 12/1996 Stevens et al.
5,584,804 A 12/1996 Klatz et al.
5,601,538 A 2/1997 Deem
5,624,396 A 4/1997 McNamara et al.
5,624,397 A 4/1997 Snoke et al.
5,626,564 A 5/1997 Zhan et al.
5,643,228 A 7/1997 Schucart et al.
5,693,017 A 12/1997 Spears et al.
5,713,847 A 2/1998 Howard, III et al.
5,716,318 A 2/1998 Manning
5,738,649 A 4/1998 Macoviak et al.
5,782,797 A 7/1998 Schweich, Jr. et al.
5,791,036 A 8/1998 Goodin et al.
5,794,629 A 8/1998 Frazee
5,797,876 A 8/1998 Spears et al.
5,827,242 A 10/1998 Follmer et al.
5,833,650 A 11/1998 Imran
5,865,789 A 2/1999 Hattler
5,879,316 A 3/1999 Safar et al.
5,899,890 A 5/1999 Chiang et al.
5,908,407 A 6/1999 Frazee et al.
5,957,879 A 9/1999 Roberts et al.
5,957,899 A 9/1999 Spears et al.
5,961,481 A 10/1999 Sterman et al.
6,027,476 A 2/2000 Sterman et al.
6,029,671 A 2/2000 Stevens
6,044,845 A * 4/2000 Lewis ..... 128/898
6,048,333 A 4/2000 Lennox et al.
6,071,271 A 6/2000 Baker et al.
6,083,198 A 7/2000 Afzal
6,083,215 A * 7/2000 Milavetz ..... 128/898
6,139,517 A 10/2000 Macoviak et al.
6,295,990 B1 * 10/2001 Lewis et al. ..... 128/898

* cited by examiner

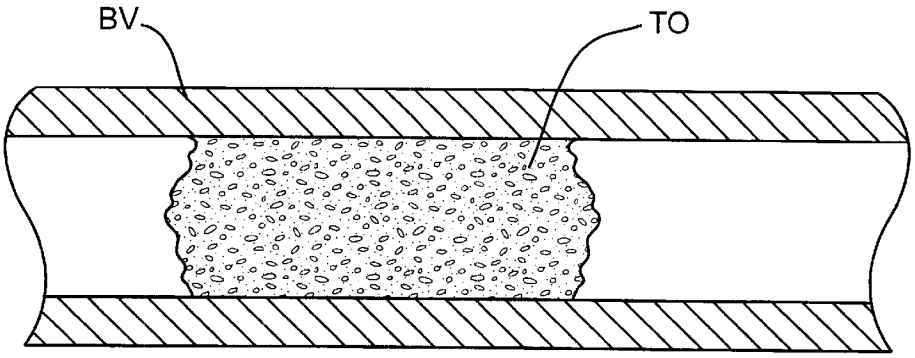


FIG. 1A

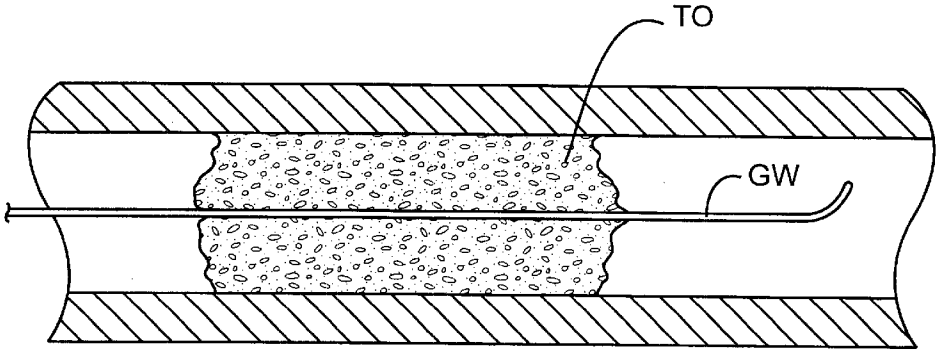


FIG. 1B

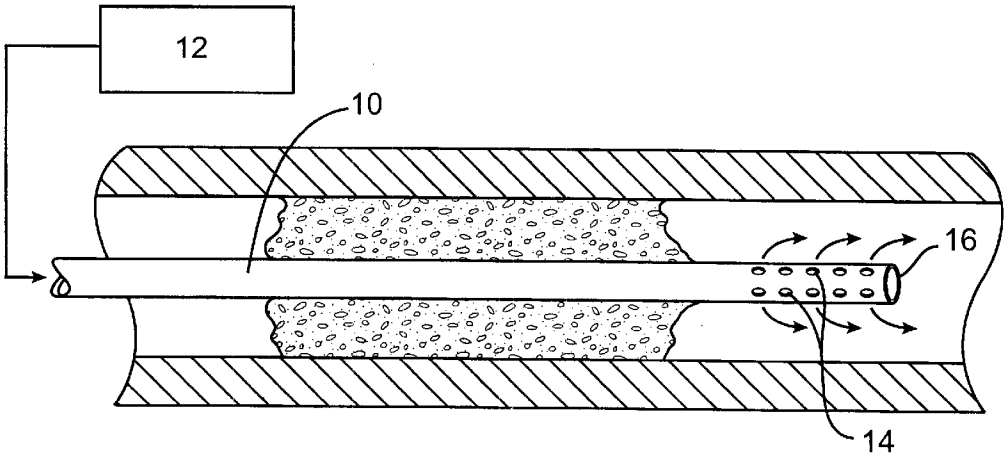


FIG. 1C

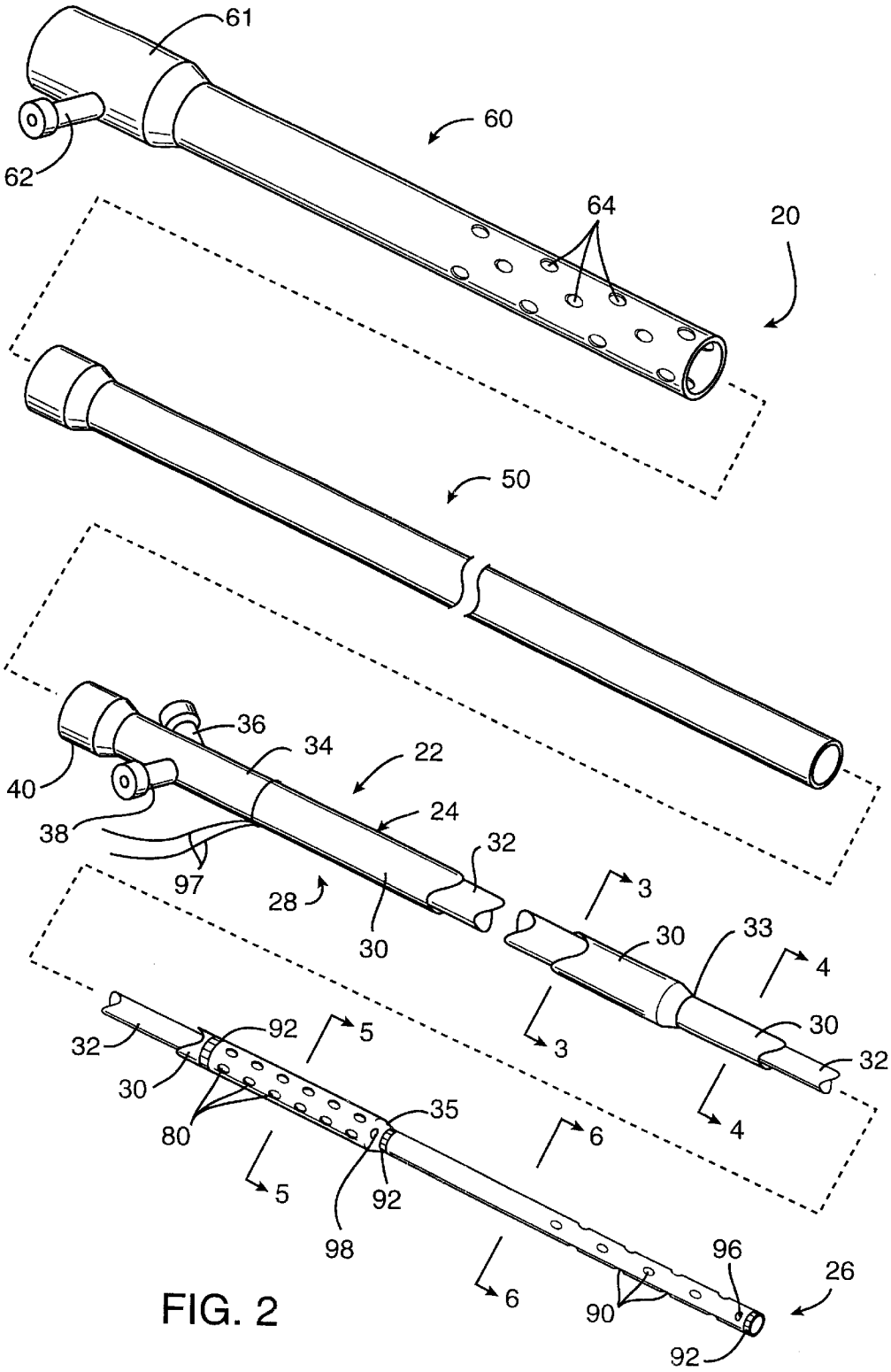
61
60
62
64
20
50
36
34
22
40
24
38
32
97
28
30
3
30
33
4
30
32
3
4
92
5
32
30
80
35
6
5
92
98
96
26
6
90
92

FIG. 2

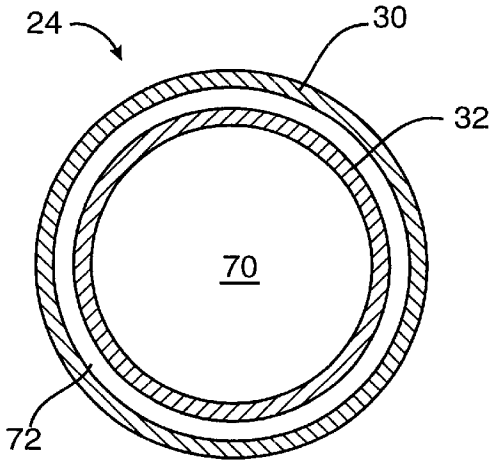


FIG. 3

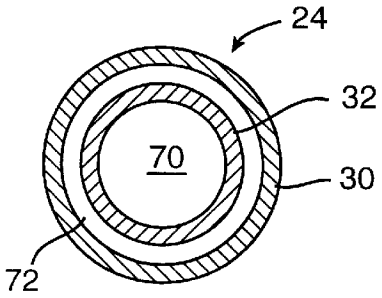


FIG. 4

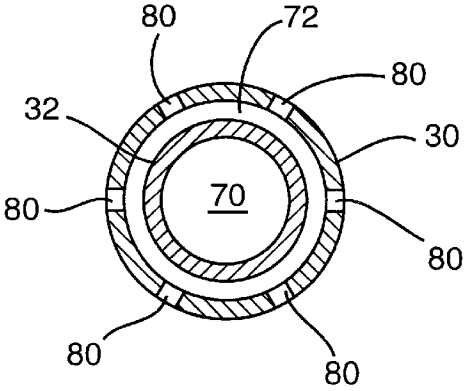


FIG. 5

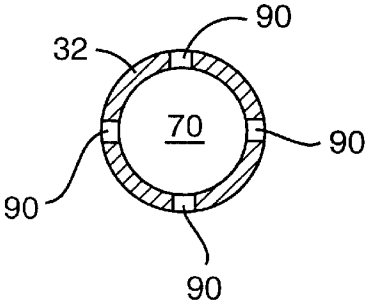


FIG. 6

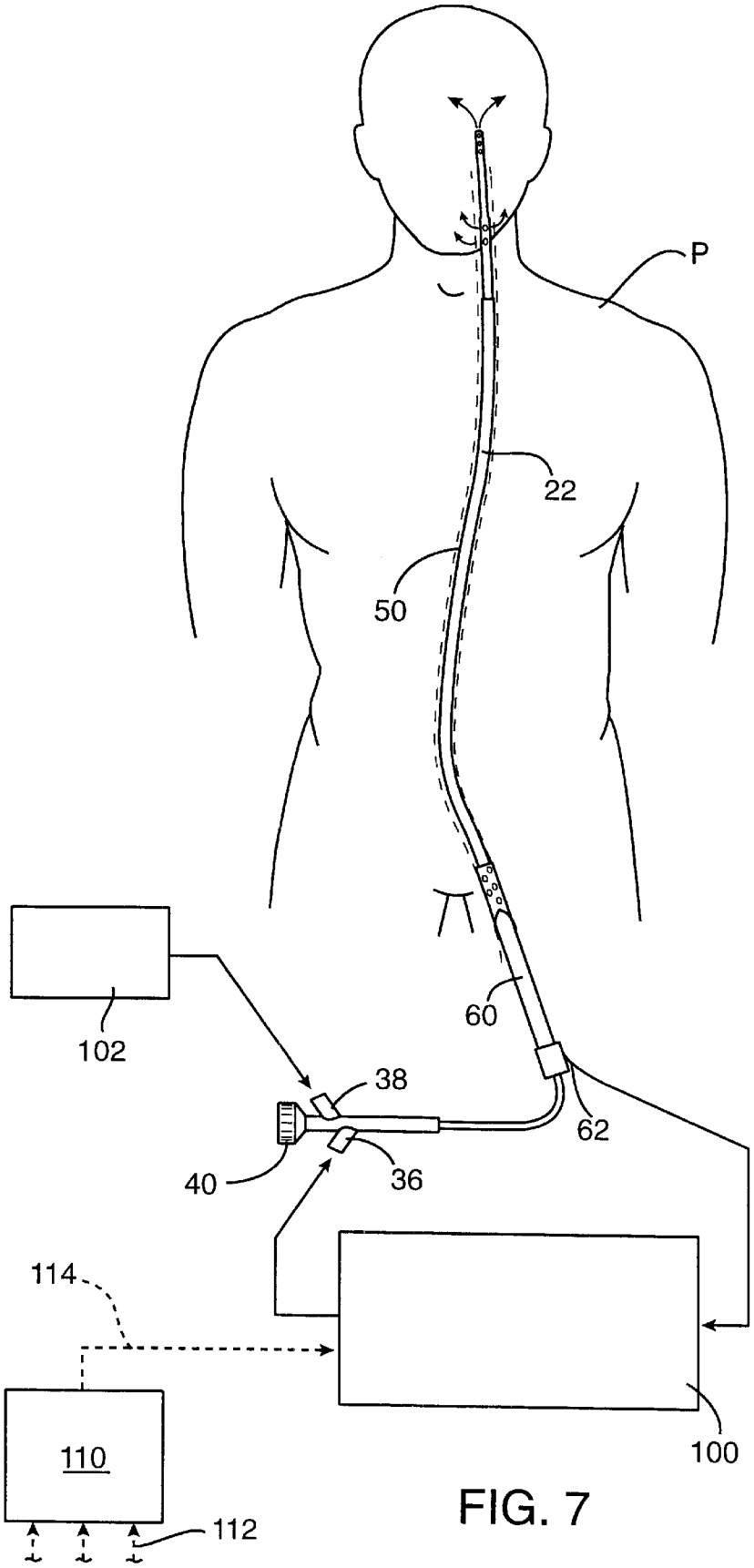


FIG. 7

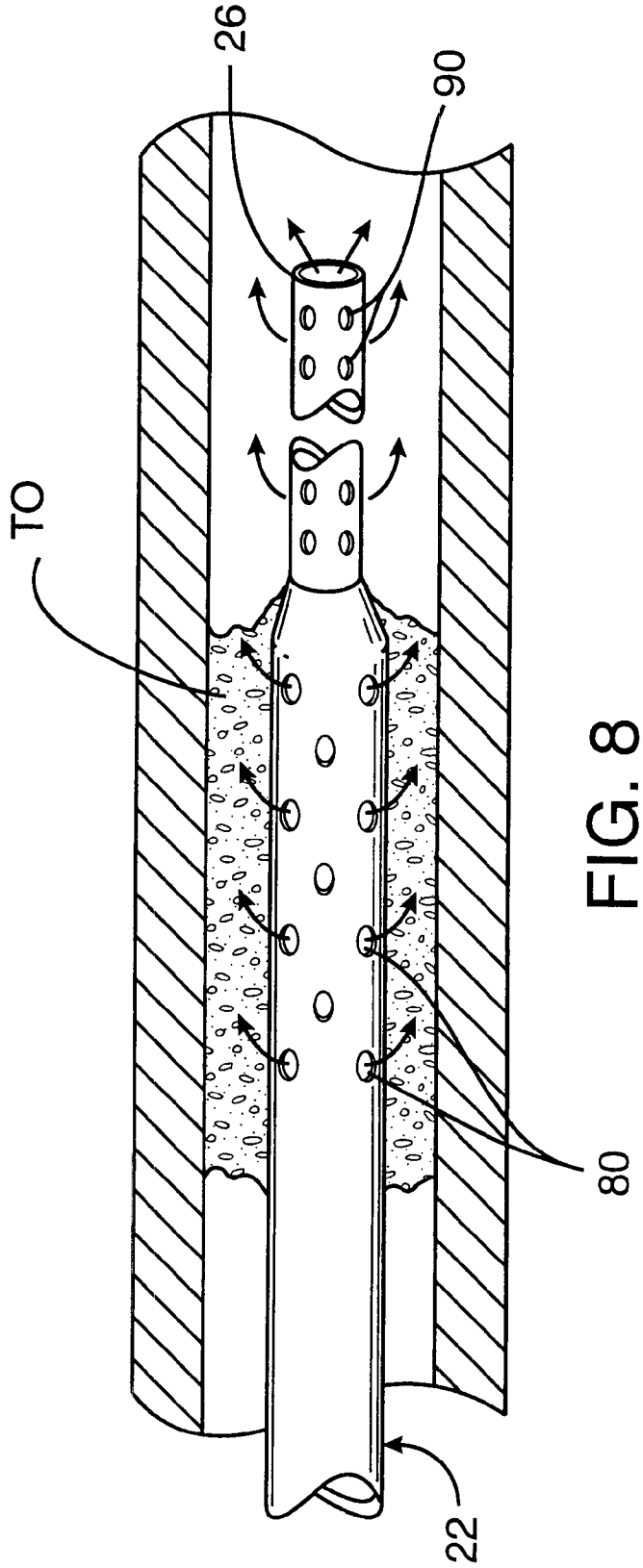


FIG. 8

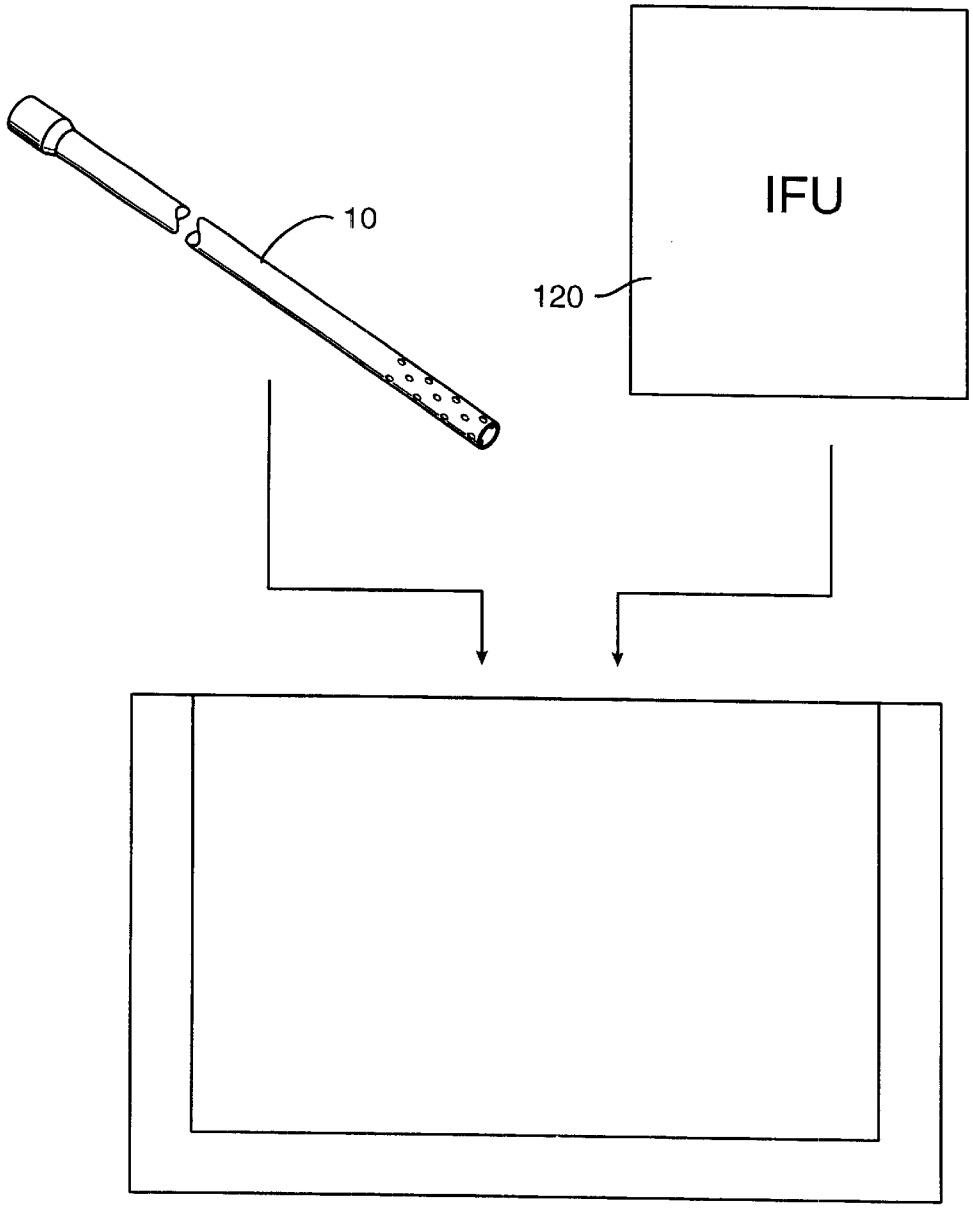


FIG. 9

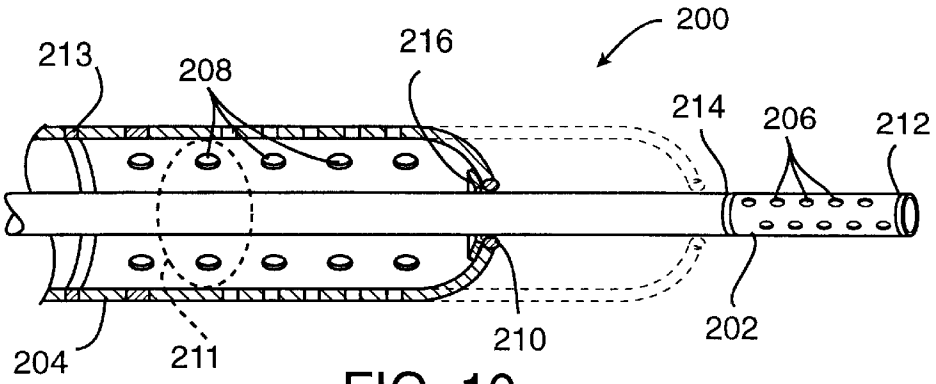


FIG. 10

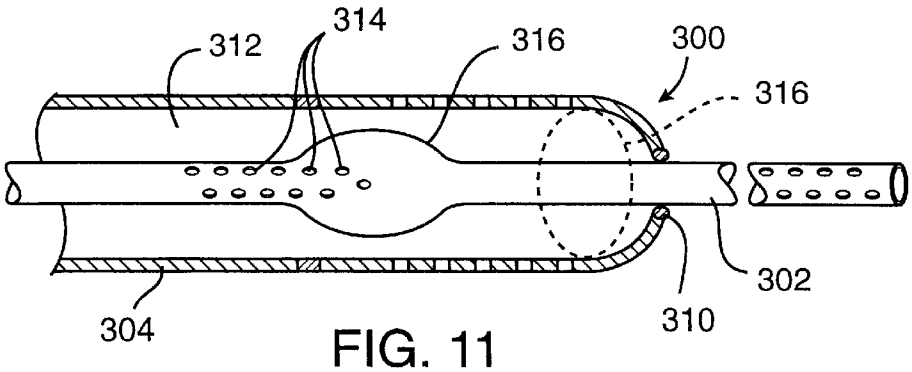


FIG. 11

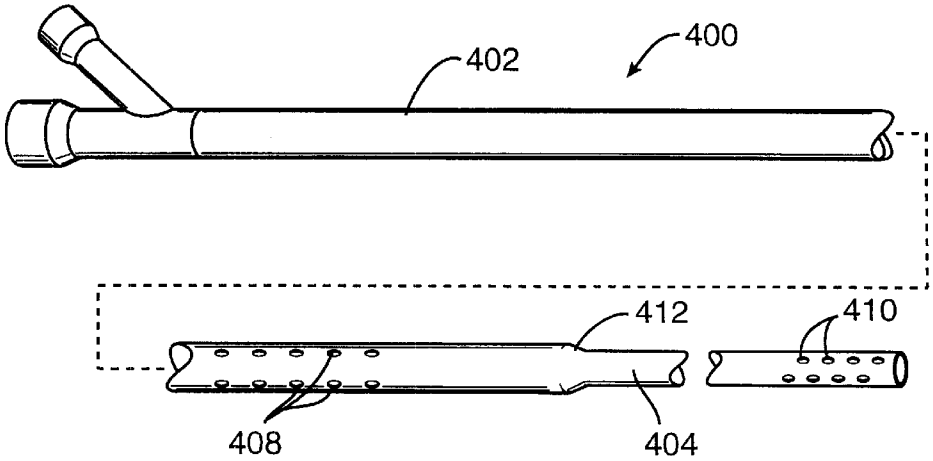


FIG. 12

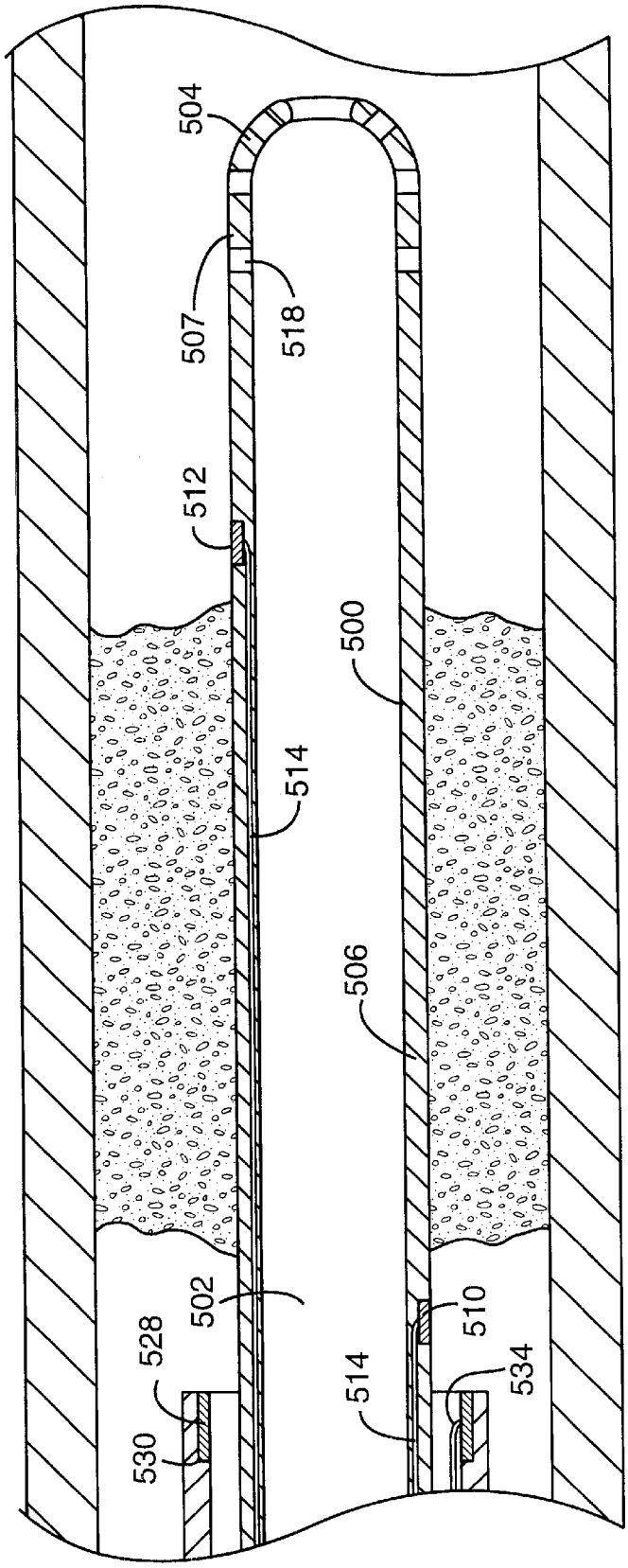


FIG. 13

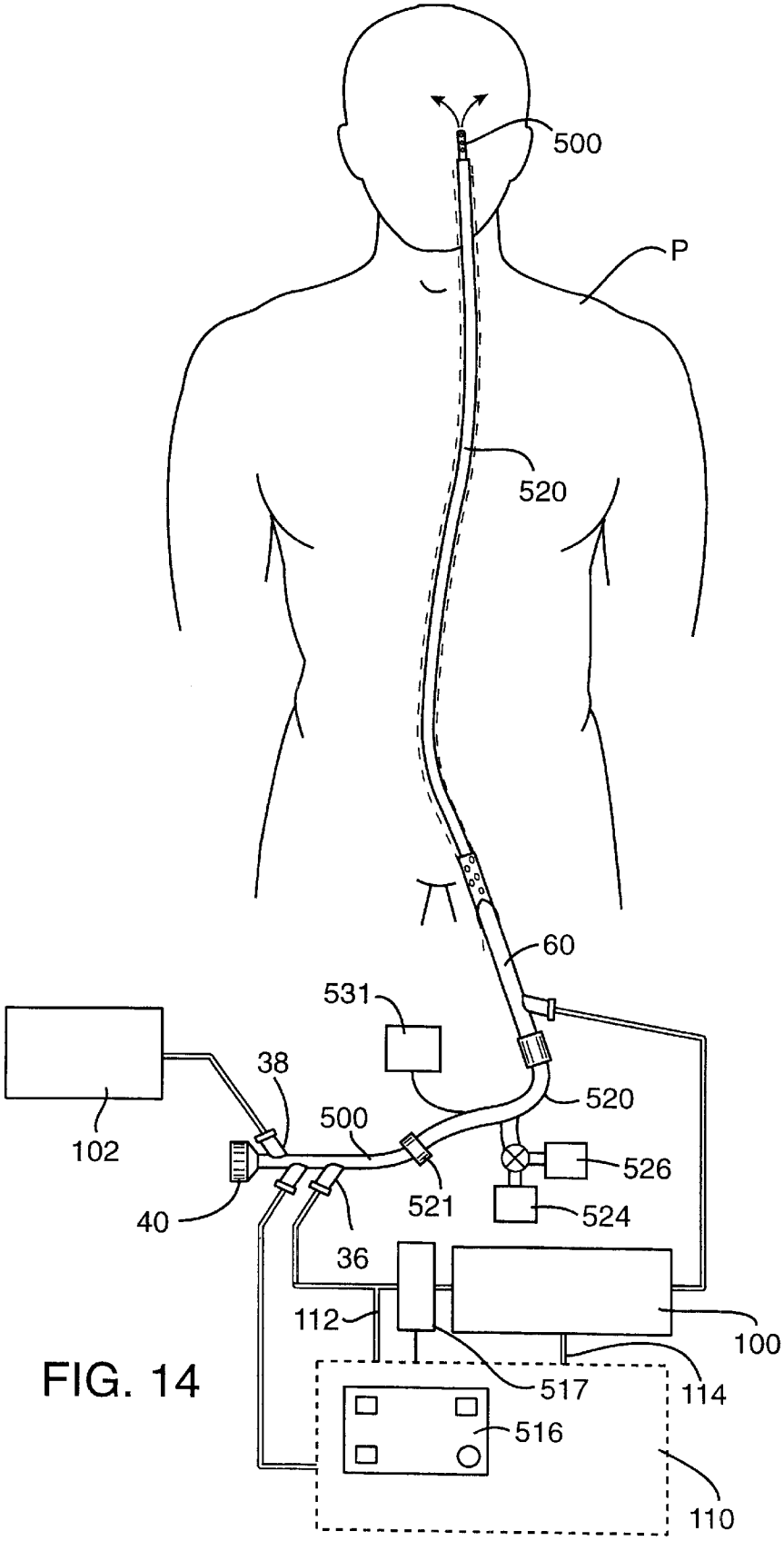
500
P
520
60
531
38
520
500
102
526
521
524
40
36
112
100
517
114
516
110

FIG. 14

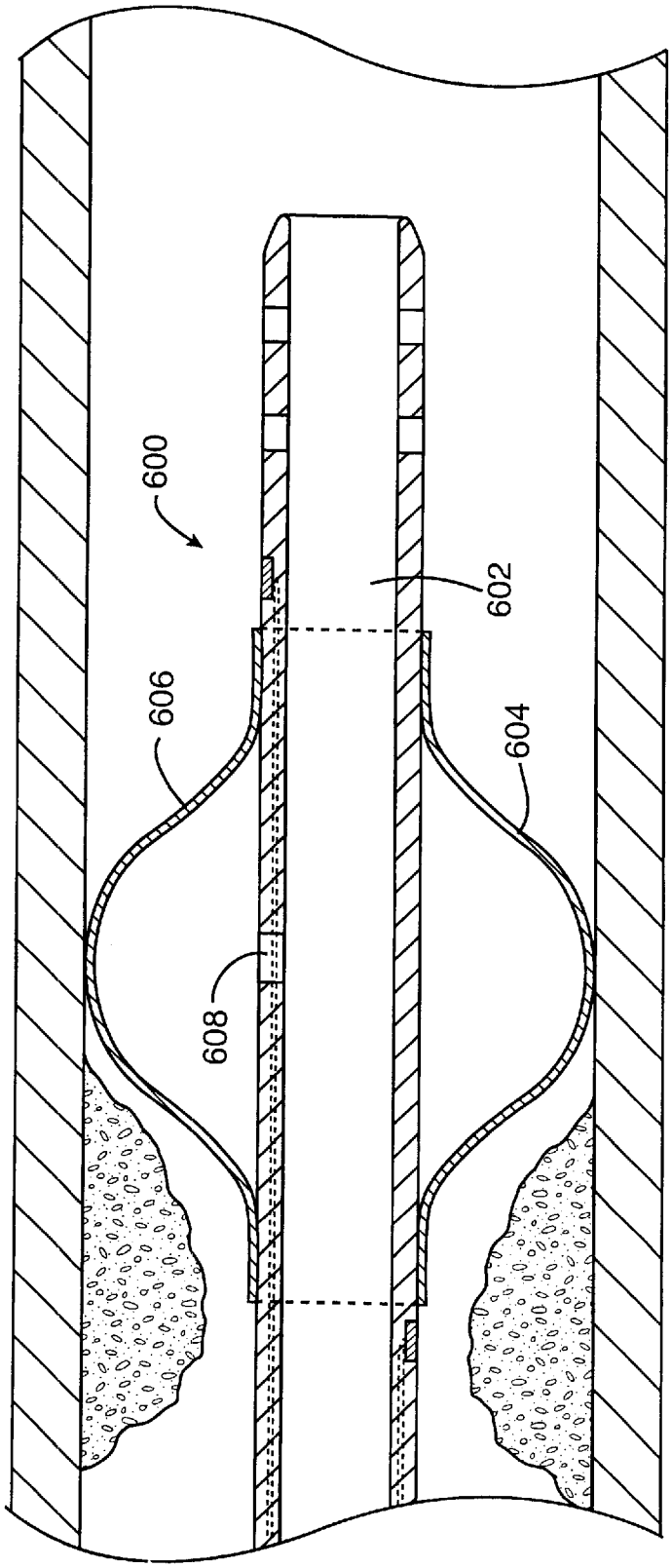


FIG. 15

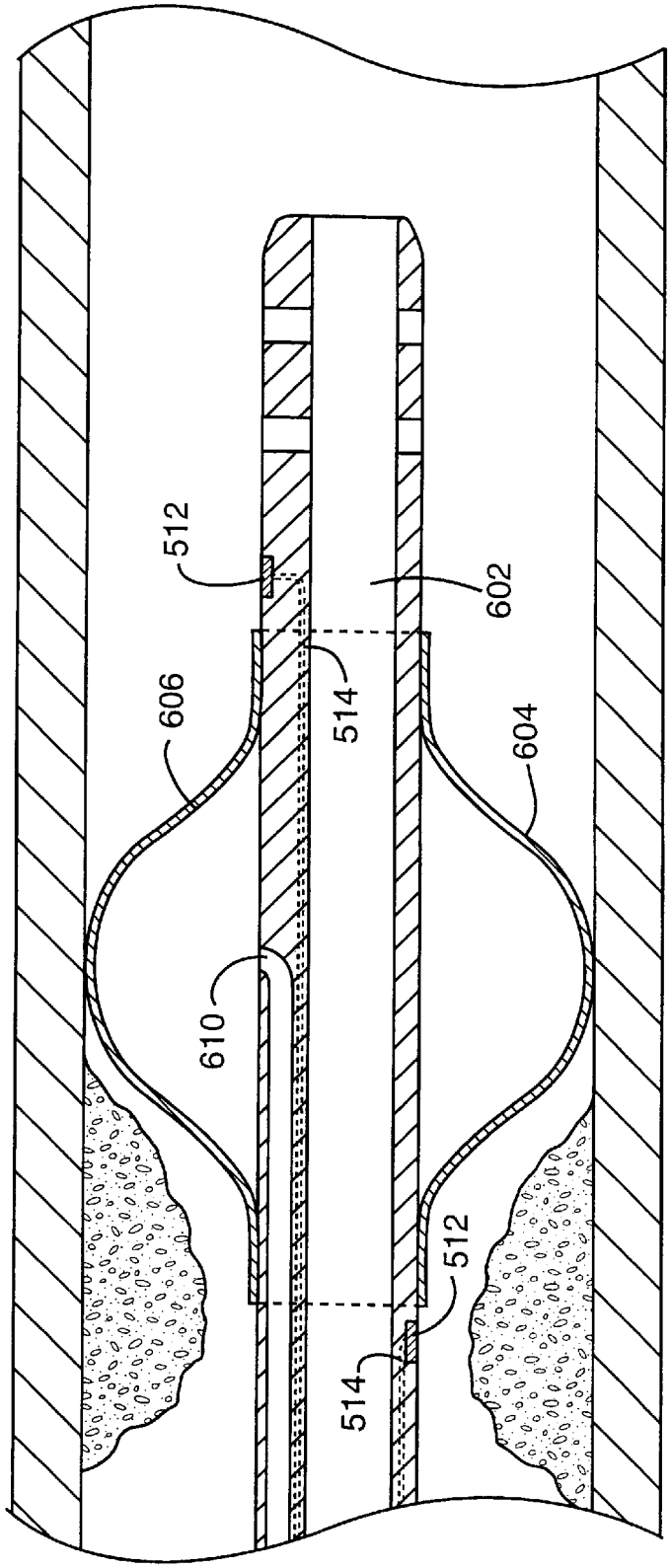


FIG. 16

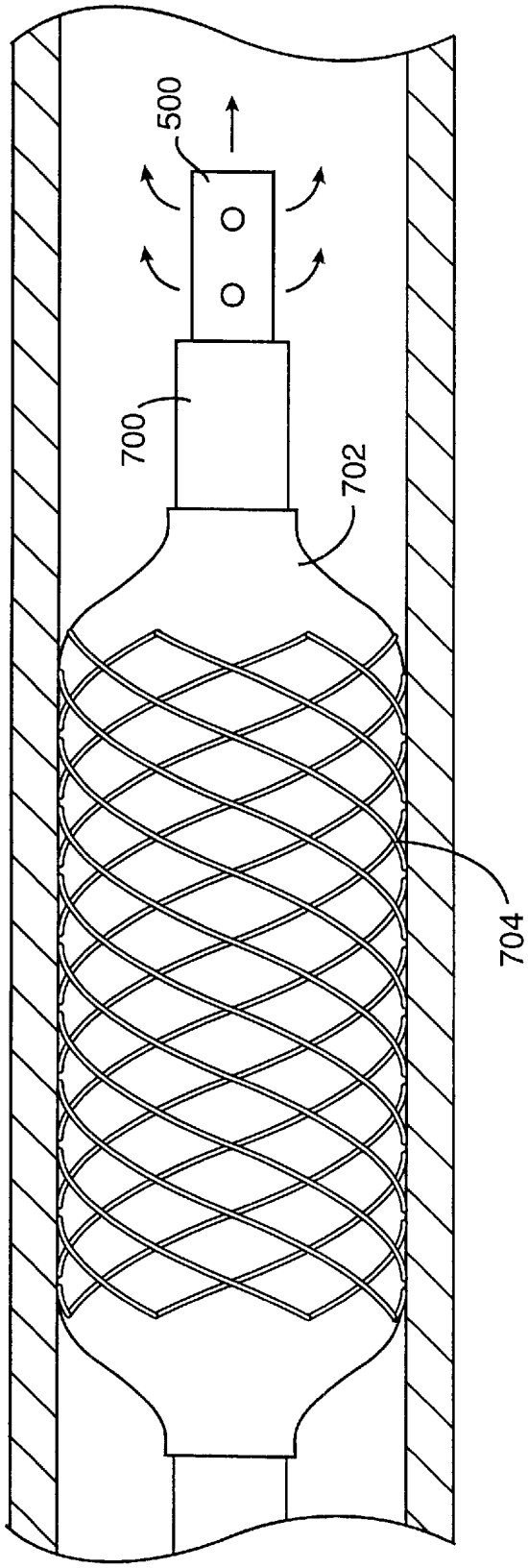


FIG. 17

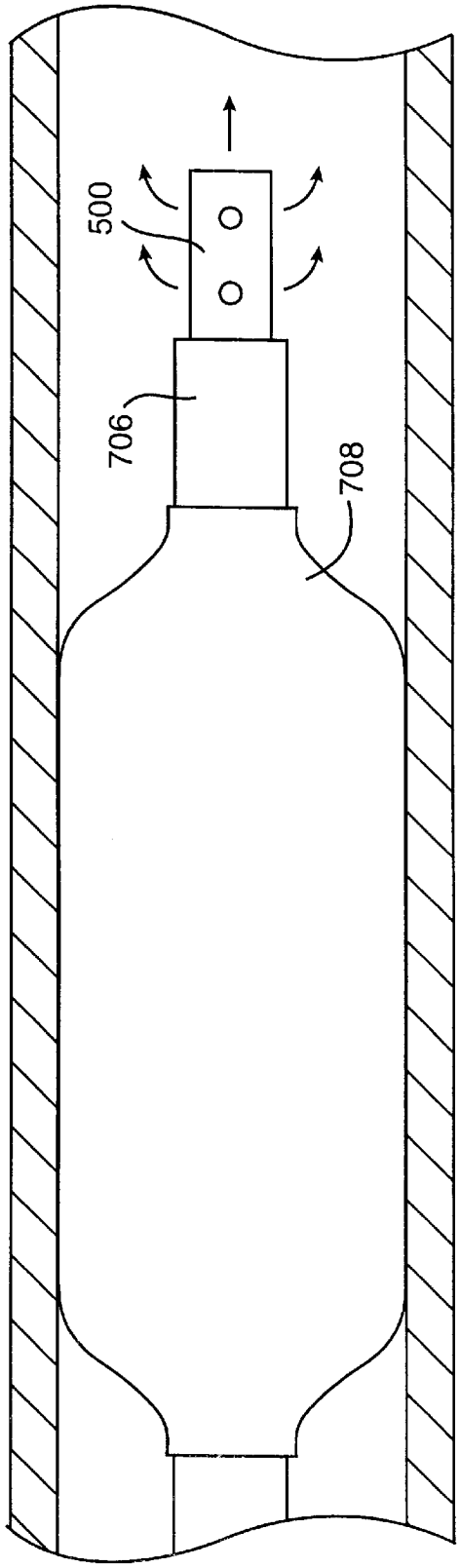


FIG. 18

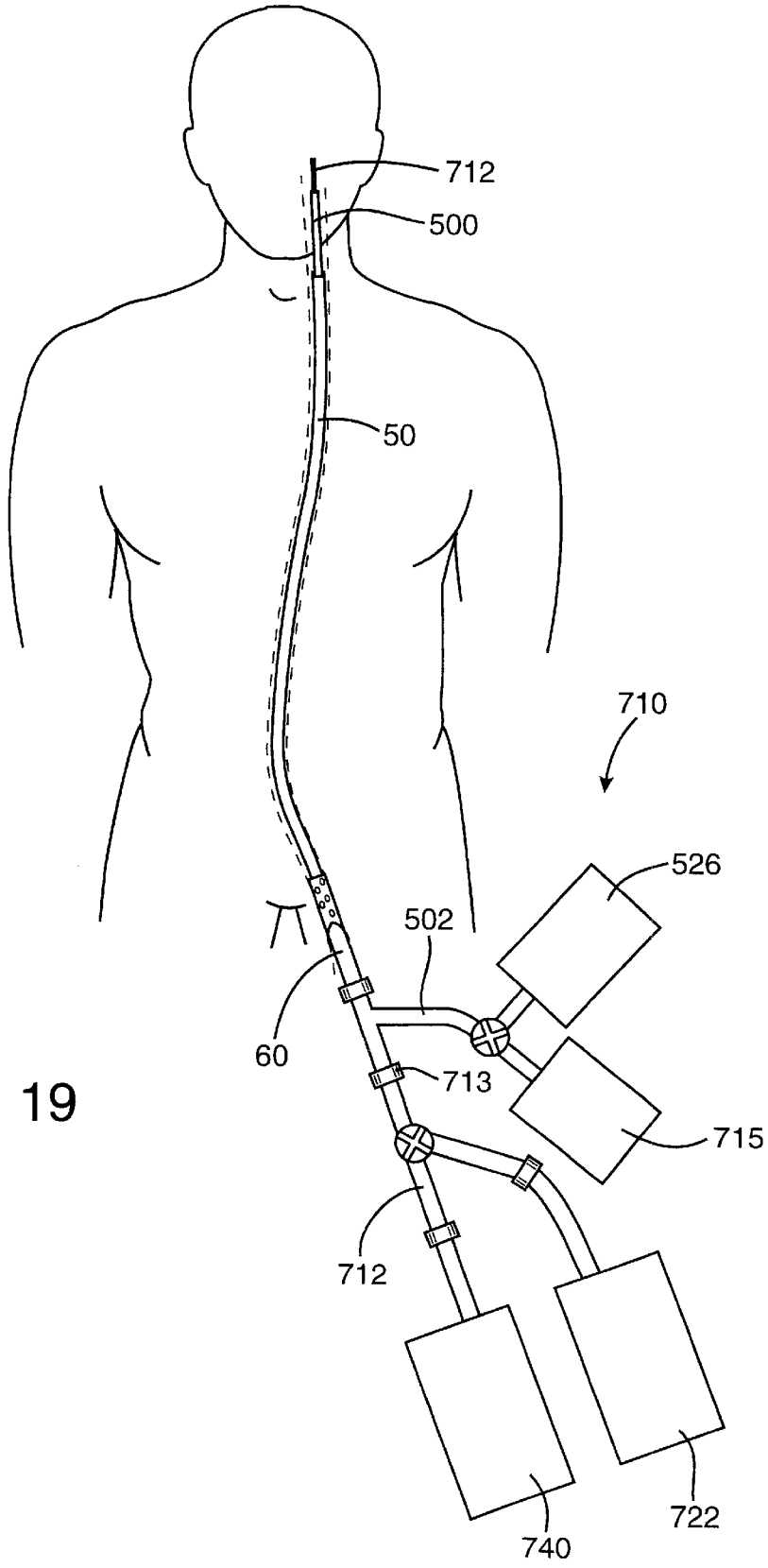


FIG. 19

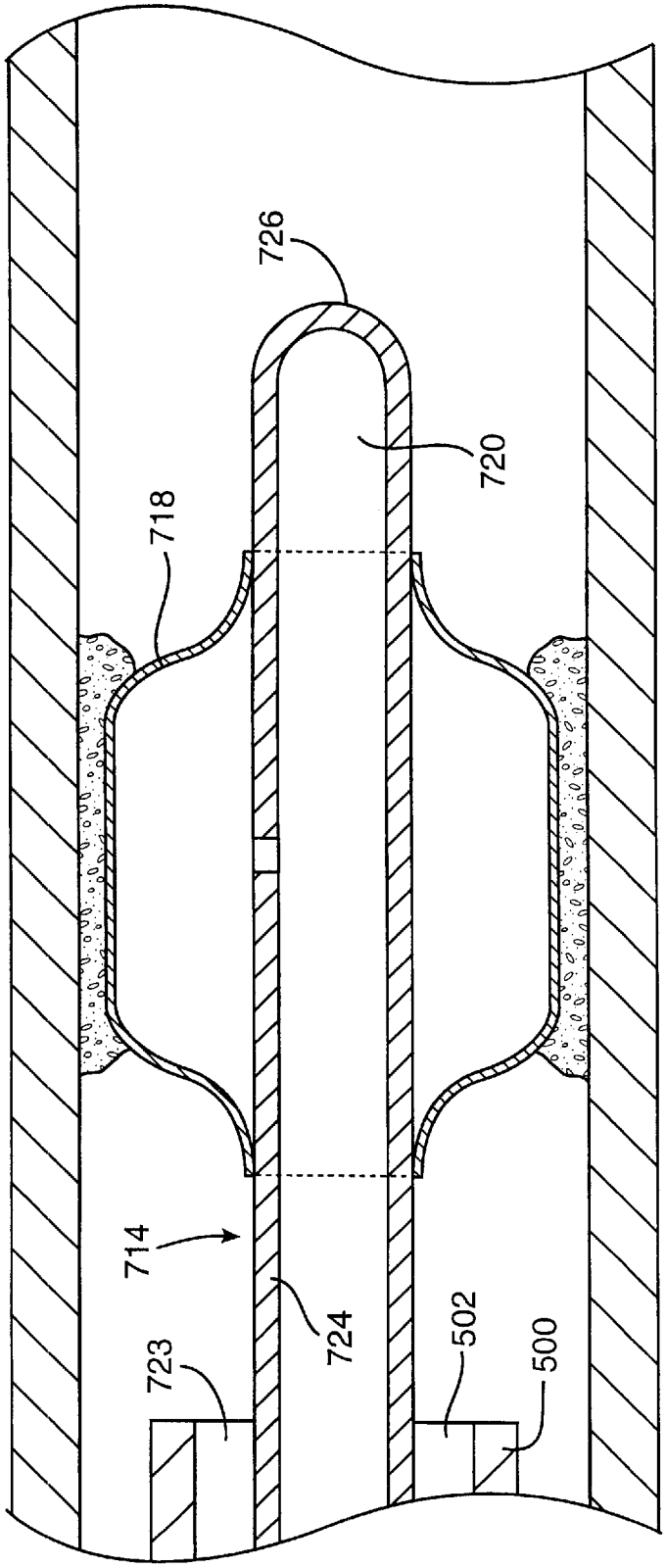


FIG. 20

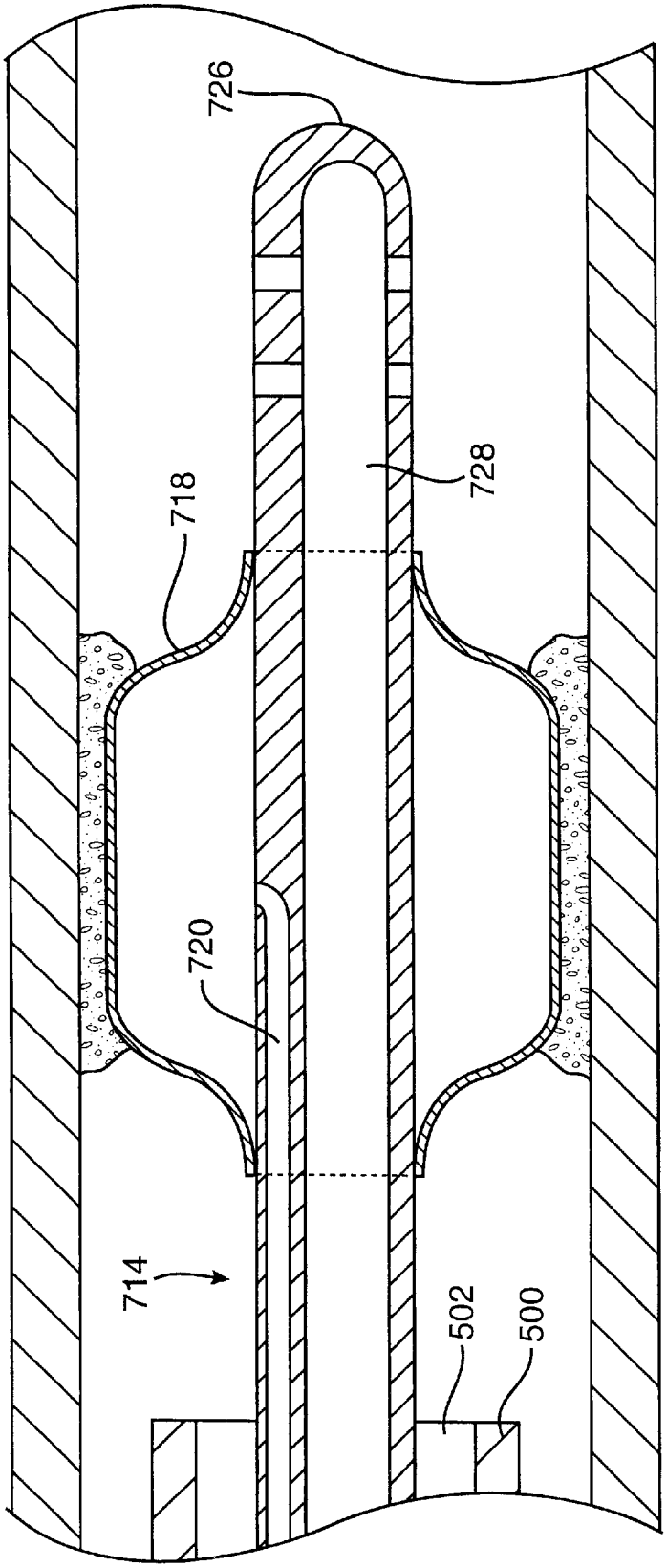


FIG. 21

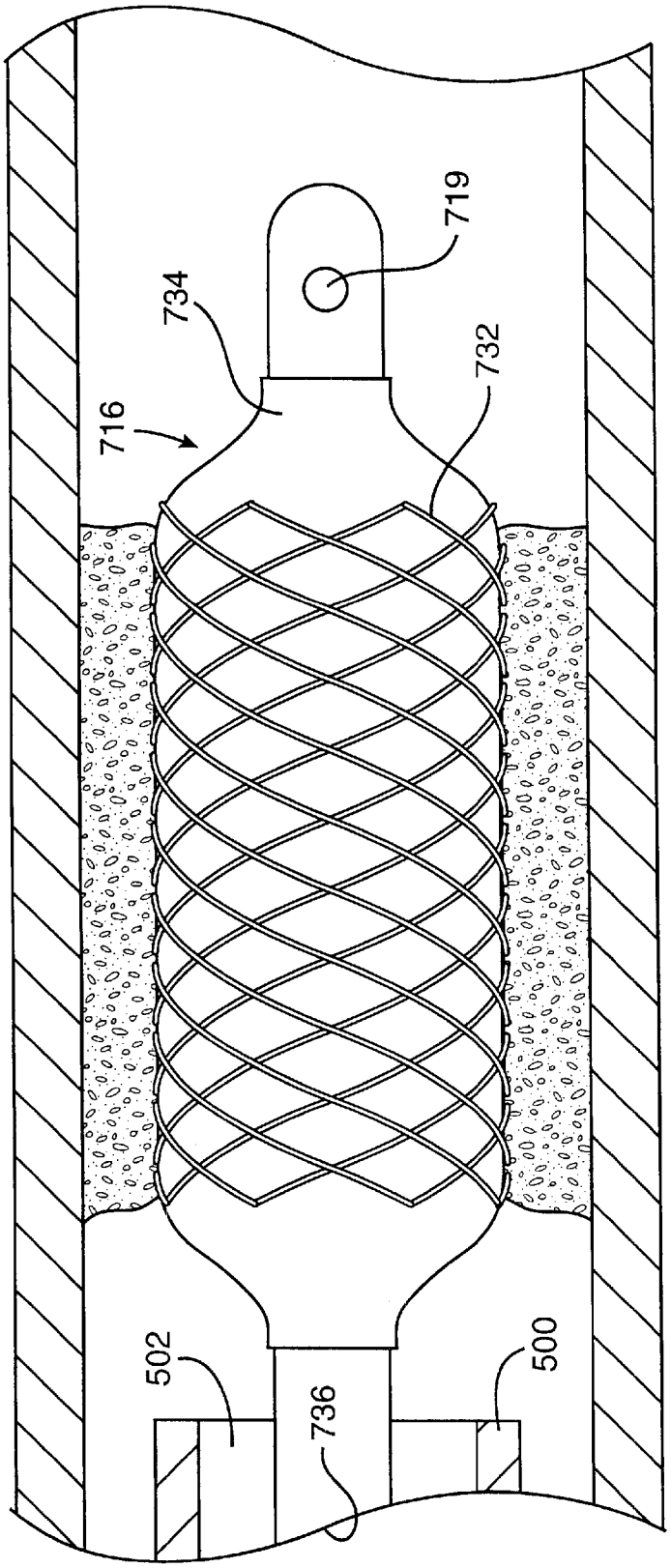


FIG. 22

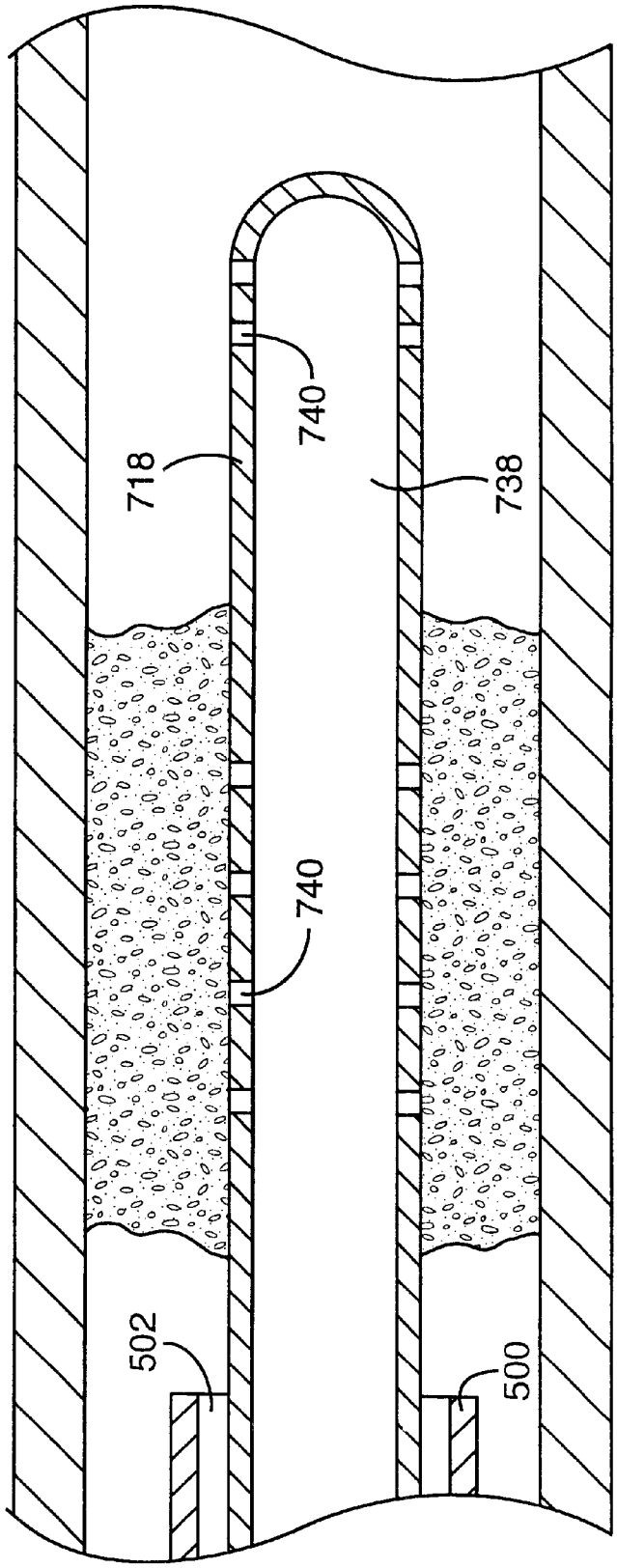


FIG. 23

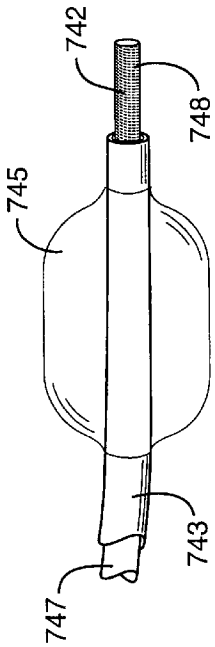


FIG. 25

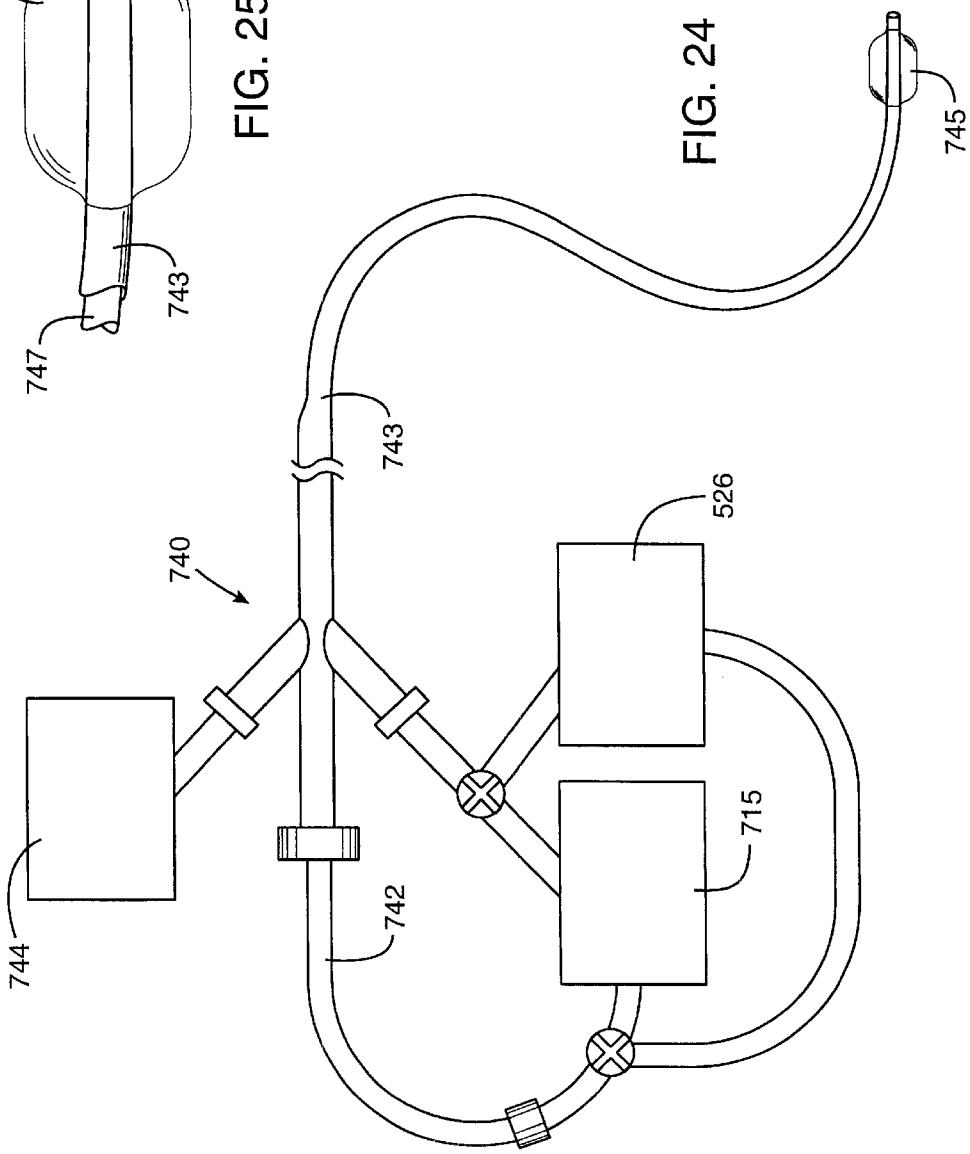


FIG. 24

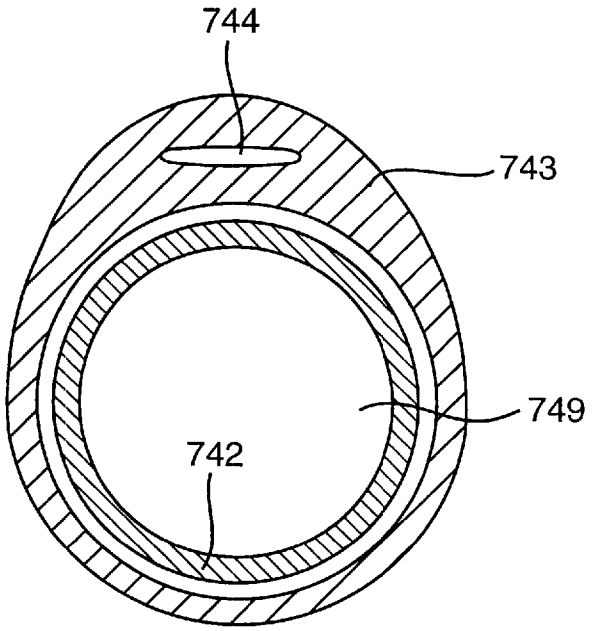


FIG. 26

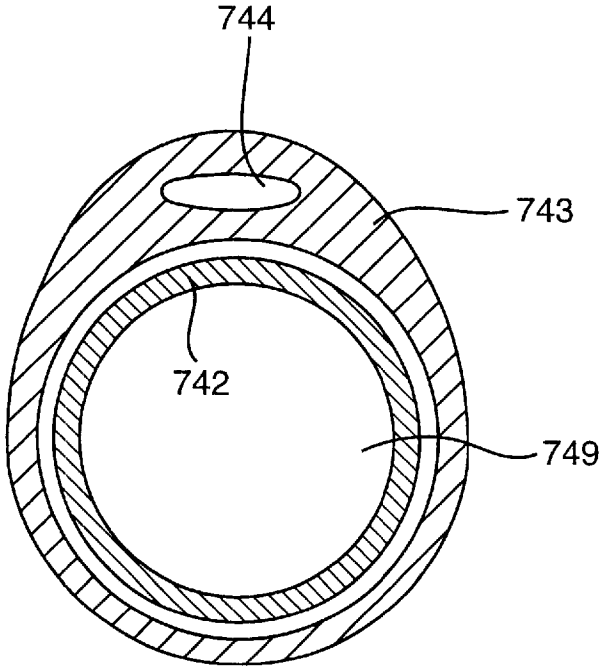


FIG. 27

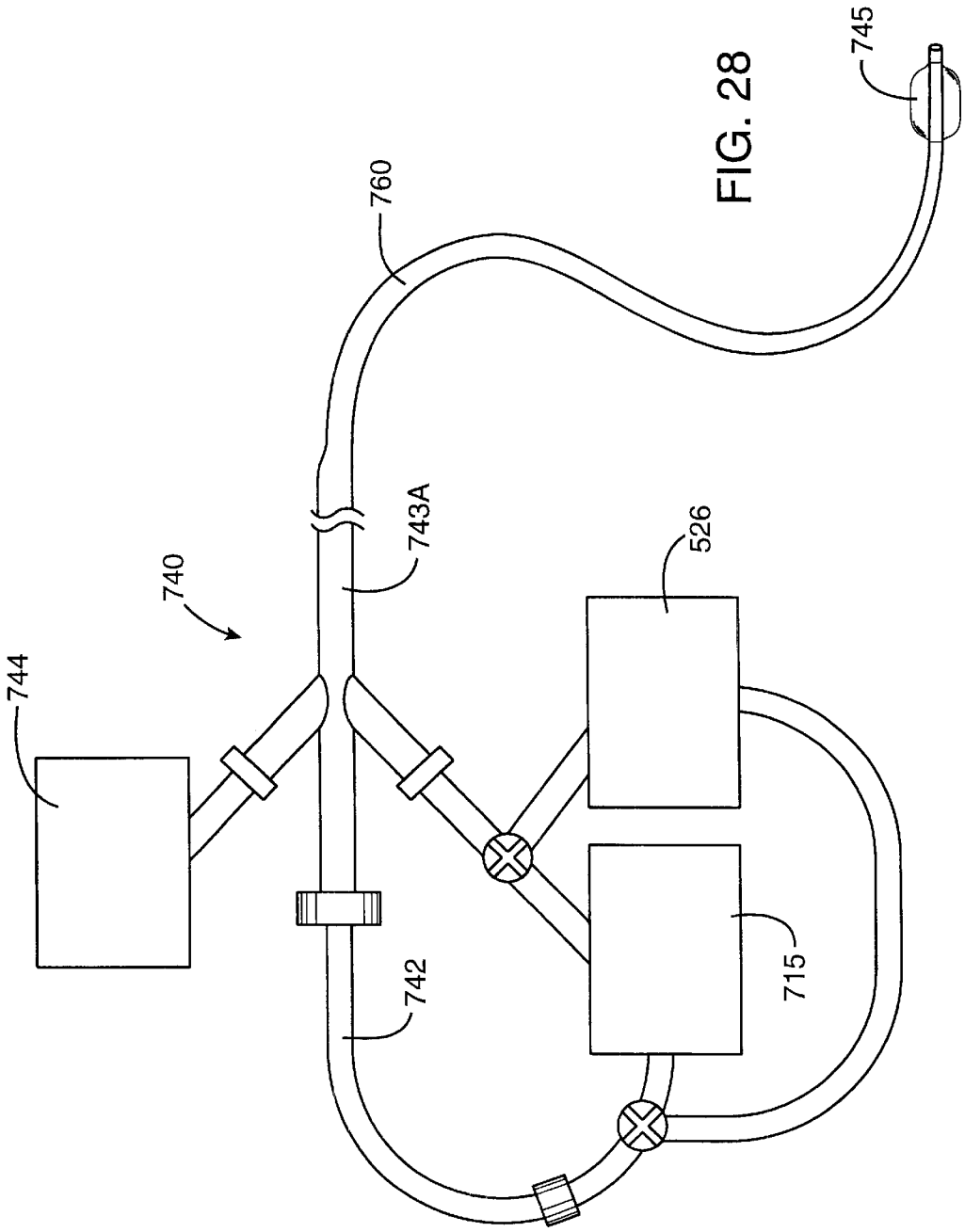


FIG. 28

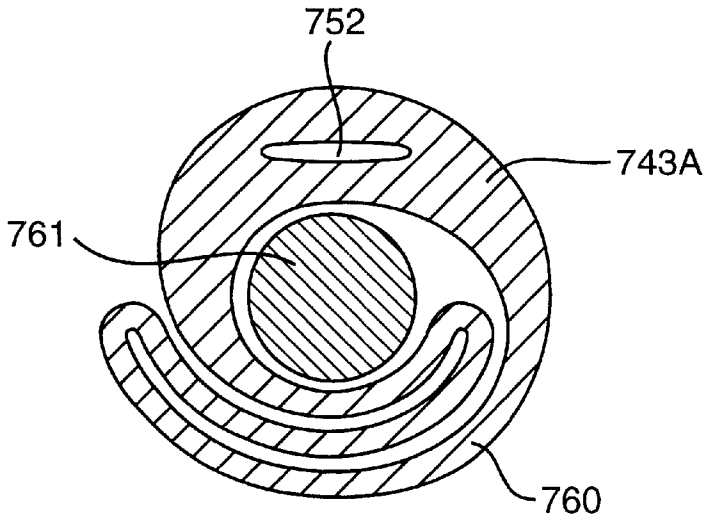


FIG. 29

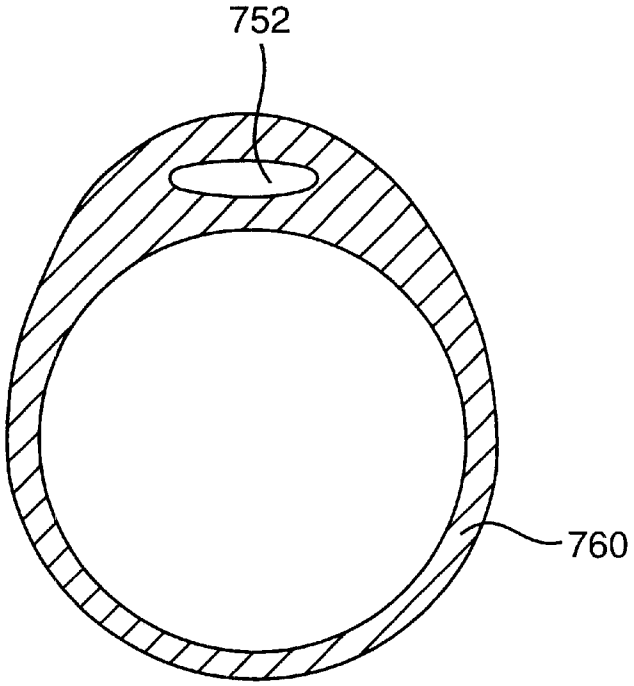


FIG. 30

# METHODS AND SYSTEMS FOR TREATING ISCHEMIA

## CROSS-REFERENCES TO RELATED APPLICATIONS

The present application is a continuation of application Ser. No. 09/311,903, filed May 14, 1999, now U.S. Pat. No. 6,295,990, which is a continuation-in-part of application Ser. No. 09/243,578, filed Feb. 3, 1999, now abandoned, which is a continuation-in-part of application Ser. No. 09/018,214, filed Feb. 3, 1998, now U.S. Pat. No. 6,044,845, the full disclosures of which are incorporated herein by reference.

## BACKGROUND OF THE INVENTION

1. Field of the Invention

The present invention relates generally to medical devices and methods. More particularly, the present invention relates to catheters, systems, kits, and methods for treating ischemia, such as intracerebral ischemia associated with stroke.

Hemodynamically significant restriction of arterial blood flow can lead to oxygen deprivation in tissue, referred to as ischemia, and can quickly lead to cell death and organ dysfunction. The brain is the organ most sensitive to ischemia, followed by the heart, the abdominal organs, and the extremities. The brain will usually not tolerate ischemia for very long without massive neuron death (stroke). When treating ischemic events in the brain, it is imperative to restore blood flow quickly and safely.

The most common causes of acute arterial ischemia in the cerebrovasculature are thrombosis and embolus. Thrombus usually forms at the site of a pre-existing atherosclerotic lesion and can cause an acute occlusion. Atherosclerosis can occur at any location within the arteries that deliver blood from the heart to the brain, but the most common locations of significant atherosclerosis are the cervical carotid artery at the carotid bifurcation, the proximal middle cerebral artery, and the vertebrobasilar arterial system. Clinically significant atherosclerosis also can occur in other intracerebral vessels.

Emboli are formed when previously stable thrombus or atheroma is released into the blood stream and becomes lodged in smaller blood vessels. Emboli can originate from atherosclerotic lesions and from within the cardiac chambers. They can cause acute obstructions of blood vessels, resulting in tissue hypoxia and neuron death. Further obstruction can also occur distally to the embolus due to secondary inflammatory responses and other reactions. Transient ischemic attacks (TIA's) occur with temporary and intermittent obstructions, allowing for neuron recovery. Stroke occurs with longer term obstruction to blood flow.

Acute arterial ischemia can also result from vasospasm, as a delayed response to intracranial hemorrhage, and may be iatrogenic, as when intracranial blood vessels are temporarily occluded during neurosurgery. Other causes include head trauma, inflammation, and infection.

Traditional therapy of acute stroke has been limited to the delivery of supportive measures. Newer treatments for stroke attempt to relieve or bypass vessel occlusion before neuron death occurs. In the life threatening emergency of acute stroke, there is a time-limited window of opportunity for treatment after the onset of symptoms. After this treatment window has closed, there is minimal opportunity for recovery of neuronal function. For all these reasons, physicians have emphasized the early treatment of patients, usually within six hours of the onset of symptoms, and on relieving the obstruction emergently.



When the obstruction is relieved, the ischemic bed will be exposed to normal arterial pressure. As will be discussed below, the inventor believes that reperfusion syndrome may result from prematurely exposing the previously ischemic bed to normal arterial pressure. Reperfusion syndrome may result from disordered function of the capillary endothelium and the blood-brain barrier in the previously ischemic vascular bed.

A number of techniques have been proposed which employ site-specific administration of thrombolytic drugs and/or mechanical means, laser or ultrasound energy sources to remove thrombus. Angioplasty, atherectomy and stent placement are employed to relieve atherosclerotic stenoses. These methods all require positioning catheter based devices at or near the site of the arterial obstruction. The primary objective is to restore blood flow as quickly as possible. Such devices, however, require significant time to position and use. There are also risks of damaging the obstructed artery, of dislodging and embolizing blood thrombus or atherosclerotic plaque, of inducing intracerebral hemorrhage or other serious complications. Directed thrombolysis using currently available catheters and guidewires often takes many hours to complete. While excellent technical results are feasible, many patients cannot tolerate the wait and their condition can deteriorate during the procedure. Moreover, the thrombolytic agents themselves may have deleterious biologic side effects. Surgical bypass does not work as well as standard medical therapy in preventing stroke recurrence and is only rarely performed.

New classes of "neuroprotectant" agents and "angiogenesis promoters" are being developed and tested. These drugs may extend the effective therapeutic window for stroke therapy and permit better long term outcomes. Their use, however, may require novel delivery systems and often require that the patient be stabilized and ischemia relieved in order to obtain a lasting clinical improvement.

For these reasons, it would be desirable to provide improved methods and apparatus for treating acute ischemic conditions, particularly stroke. It would be further desirable if such methods and apparatus were also useful for treating chronic ischemia in other portions of a patient's vasculature, including the coronary vasculature and the peripheral and mesenteric vasculature. The methods and apparatus should be capable of rapidly reestablishing blood flow, at controlled pressures, at a rate sufficient to relieve ischemia distal to the occlusion, and may be adaptable for use in an emergency situation (i.e., outside the hospital) and/or within a hospital environment. The methods and apparatus should provide for control over the rate of flow, pressure in the ischemic bed and/or cessation of flow to the ischemic region in order to avoid reperfusion injury. In addition to relieving ischemia, the methods and devices of the present invention may also provide access and support for performing other therapeutic interventions to treat the occlusion, including both drug interventions and mechanical interventions. The methods and devices should be adaptable to use access routes of a type which are familiar to interventionalists so as to permit rapid and wide spread adoption. At least some of these objectives will be met by different aspects of the present invention.

2. Description of the Background Art

U.S. Pat. No. 5,149,321 describes an emergency system for infusing an oxygenated medium into the cerebral vasculature in patients following a heart attack. Active perfusion through coronary angioplasty catheters is described in a number of patents and published applications, including

U.S. Pat. Nos. 5,106,363; 5,158,540; 5,186,713; and 5,407,424; Canadian Patent 1,322,315; and WO 97/19713. The latter describes perfusion of an oxygenated medium through a guidewire. Perfusion and/or infusion catheters and systems are described in a number of patents, including U.S. Pat. Nos. 5,584,804; 5,090,960; 4,611,094; 4,666,426; 4,921,483; 5,643,228; 5,451,207; 5,425,723; 5,462,523; 5,531,715; 5,403,274; 5,184,627; 5,066,282; 4,850,969; 4,804,358; 4,468,216; and WO 92/20398. U.S. Pat. No. 5,090,960 describes a passive perfusion catheter having spaced-apart balloons and a suction tube for recirculating a thrombolytic agent.

## SUMMARY OF THE INVENTION

The present invention provides methods, apparatus, and kits for treating patients suffering from ischemia resulting from the partial or total obstruction of a blood vessel. Usually, the obstructions will be high-grade blockages, e.g., those which result in greater than 75% flow reduction, but in some instances they may be of a lower grade, e.g., ulcerated lesions. As used hereinafter, the terms "obstruction," "occlusion," and "blockage" will be used generally interchangeably and will refer to both total obstructions where substantially all flow through a blood vessel is stopped as well as to partial obstructions where flow through the blood vessel remains, although at a lower rate than if the obstruction were absent.

Preferred use of the present invention is for the treatment of patients suffering from acute stroke resulting from a sudden, catastrophic blockage of a cerebral artery. The invention may also be used to minimize or prevent ischemia during other conditions which result in blocked points or segments in the cerebral arterial vasculature, such as iatrogenic occlusion of an artery, e.g., during neurosurgery, or to relieve vasospasm induced ischemia. The present invention, however, will also be useful for treating acute blockages in other portions of the vasculature as well as for treating chronic occlusions in the cerebral, cardiac, peripheral, mesenteric, and other vasculature. Optionally, the methods of the present invention may be used to facilitate dissolving or removing the primary obstruction responsible for the ischemia, e.g., by drug delivery, mechanical intervention, or the like, while perfusion is maintained to relieve the ischemia.

Methods according to the present invention comprise penetrating a perfusion conduit through the blockage and subsequently pumping an oxygenated medium through the conduit at a rate or pressure sufficient to relieve ischemia downstream from the blockage. The oxygenated medium is preferably blood taken from the patient being treated. In some instances, however, it will be possible to use other oxygenated media, such as perfluorocarbons or other synthetic blood substitutes. In a preferred aspect of the present invention, the pumping step comprises drawing oxygenated blood from the patient, and pumping the blood back through the conduit at a controlled pressure and/or rate, typically a pressure within the range from 50 mmHg to 400 mmHg, preferably at a mean arterial pressure in the range from 50 mmHg to 150 mmHg, and at a rate in the range from 30 cc/min to 360 cc/min, usually from 30 cc/min to 240 cc/min, and preferably from 30 cc/min to 180 cc/min, for the cerebral vasculature. Usually, pressure and flow rate will both be monitored. The blood flow system preferably keeps the pressure at or below 400 mmHg, 350 mmHg, or 300 mmHg. Pressure is preferably monitored using one or more pressure sensing element(s) on the catheter which may be disposed distal and/or proximal to the obstruction where the blood or other oxygenated medium is being released. Flow rate may easily be monitored on the pumping unit in a conventional manner or may be monitored by a separate control unit. Conveniently, the blood may be withdrawn through a sheath which is used for percutaneously introducing the perfusion conduit.

It will usually be desirable to control the pressure and/or flow rate of the oxygenated medium being delivered distally to the occlusion. Usually, the delivered pressure of the oxygenated medium should be maintained below the local peak systolic pressure and/or mean arterial blood pressure of the vasculature at a location proximal to the occlusion. It will generally be undesirable to expose the vasculature distal to the occlusion to a pressure above that to which it has been exposed prior to the occlusion. Pressure control of the delivered oxygenated medium will, of course, depend on the manner in which the medium is being delivered. In instances where the oxygenated medium is blood which is being passively perfused past the occlusion, the delivered pressure will be limited to well below the inlet pressure, which is typically the local pressure in the artery immediately proximal to the occlusion. Pressure control may be necessary, however, when the oxygenated medium or blood is being actively pumped. In such cases, the pump may have a generally continuous (non-pulsatile) output or in some cases may have a pulsatile output, e.g., being pulsed to mimic coronary output. In the case of a continuous pump output, it is preferred that the pressure in the vascular bed immediately distal to the occlusion be maintained below the mean arterial pressure usually being below 150 mmHg, often being below 100 mmHg. In the case of a pulsatile pump output, the peak pressure should be maintained below the peak systolic pressure upstream of the occlusion, typically being below 200 mmHg, usually being below 150 mmHg.

Pressure control of the oxygenated medium being delivered downstream of the occlusion is preferably achieved using a digital or analog feedback control apparatus where the pressure and/or flow output of the pump is regulated based on a measured pressure and/or flow value. The pressure value may be measured directly or indirectly. For example, the pressure downstream of the occlusion may be measured indirectly through the perfusion conduit. A separate pressure lumen may be provided in the perfusion conduit and a pressure measurement transducer located at the proximal end of the conduit. Pressure sensed by a distal port of the pressure measuring conduit will then be transmitted through the conduit to the transducer. Pressure transducers are a preferred pressure sensor for measuring pressure in the vasculature distal to the occlusion. The pressure sensors may be mounted near the distal tip of the perfusion conduit itself or could be mounted on a separate guidewire or other structure which crosses the occlusion with the perfusion conduit. The pressure signals generated by the transducers are transmitted through electrically conductive elements, such as wires, to the proximal end of the perfusion conduit where they are connected to a pressure monitor connected to or integral with the controller. The pump output can then be controlled based on conventional control algorithms, such as proportional control algorithms, derivative control algorithms, integral control algorithms, or combinations thereof. In one embodiment of the present invention, the pressure sensor is spaced from the perfusion outlets so that fluid flow forces do not affect the pressure measurements.

Actual manipulation of the pressure and/or flow provided by a circulating pump can be effected in a variety of ways. In the case of centrifugal pumps, the flow can be measured

at the pump output and the pressure can be measured in any of the ways set forth above. Control of both the flow rate and the pressure can be achieved by appropriately changing the pump speed and downstream flow resistance, where the latter can be manipulated using a control valve. Suitable flow control algorithms are well described in the patent and technical literature.

Control of peristaltic and other positive displacement pumps is achieved in a slightly different way. Flow volume from a positive displacement pump is a linear function of the pump speed and thus may be controlled simply by varying the pump speed. Pressure output from the positive displacement pump, in contrast, will be dependent on flow resistance downstream from the pump. In order to provide for control of the output pressure from the pump (which is necessary to control the pressure downstream of the occlusion), a pressure control system may be provided. Typically, the pressure control system may comprise a bypass flow loop from the pump output back to the pump inlet. By then controlling the amount of blood output which is by-passed back to the inlet, that pressure can be manipulated. Typically, a flow control valve can be used to adjust the by-pass flow in order to achieve the target pressure control point downstream of the obstruction. Suitable flow and pressure control algorithms for positive displacement pumps, such as roller pumps, are well described in the patent and technical literature.

In addition to controlling pressure and/or flow rates, the systems of the present invention can provide control for a number of other parameters, such as partial oxygen pressure (pO2) in the perfused blood, partial carbon dioxide pressure (pCO2) in the perfused blood, pH in the perfused blood, temperature of the perfused blood, metabolite concentrations, and the like. Both pO2 and pCO2 can be controlled using the oxygenator in the system, as described in more detail below. The pH can be controlled by introducing appropriate physiologically acceptable pH modifier (s), such as buffer and bicarbonate solutions and the like. Temperature is controlled by providing appropriate heat exchange capabilities in the extracorporeal pumping system. The temperature will usually be decreased in order to further inhibit tissue damage from the ischemic conditions, but could be elevated for other purposes. Suitable sensors and devices for measuring each of the parameters are commercially available, and suitable control systems can be provided as separate analog units or as part of a digital controller for the entire system, such as a desk or lap top computer which is specially programmed to handle the monitoring and control functions as described in this application. Concentration and/or physiologic activity of certain formed cellular elements, such as white blood cell or platelets, can be selectively controlled with suitable control systems and devices.

A particular advantage of the present invention lies in the ability to lessen or eliminate reperfusion injury which can result from the rapid restoration of full blood flow and pressure to ischemic tissue. As described above, the use of thrombolytics and other prior treatments can cause the abrupt removal of an obstruction causing rapid infusion of blood into the ischemic tissue downstream of the occlusion. It is believed that such rapid restoration of full blood flow and pressure, typically at normal physiologic pressures, can result in further damage to the leaky capillary beds and dysfunctional blood-brain barrier which results from the prior ischemic condition.

The present invention allows for a controlled reperfusion of the ischemic tissue where blood can initially be released downstream of the obstruction at relatively low pressures and/or flow rates. That is, it will be desirable to initiate the flow of blood or other oxygenated medium slowly and allow the flow rate and pressure to achieve their target values over time. For example, when actively pumping the oxygenated medium, the pumping rate can be initiated at a very low level, typically less than 30 cc/min, often less than 10 cc/min, and sometimes beginning at essentially no flow and can then be increased in a linear or non-linear manner until reaching the target value. Rates of increase can be from 1 cc/min/min to 360 cc/min/min, usually being from 5 cc/min/min to 120 cc/min/min. Alternatively, the flow of blood or other oxygenated medium can be regulated based on pressure as mentioned above. For example, flow can begin with a pressure in the previously ischemic bed no greater than 10 mmHg, typically from 10 mmHg to 70 mmHg. The pressure can then be gradually increased, typically at a rate in the range from 5–100 mmHg over 2, 8 or even 48 hours. In some instances, it may be desirable to employ blood or other oxygenated medium that has been superoxygenated, i.e., carrying more oxygen per ml than normally oxygenated blood.

While pumping will usually be required to achieve and/or maintain adequate perfusion, in some instances passive perfusion may be sufficient. In particular, perfusion of the smaller arteries within the cerebral vasculature can sometimes be provided using a perfusion conduit having inlet ports or apertures on a proximal portion of the conduit and outlet ports or apertures on a distal portion of the conduit. By then positioning the inlet and outlet ports on the proximal and distal sides of the obstruction, respectively, the natural pressure differential in the vasculature will be sufficient to perfuse blood through the conduit lumen past the obstruction. Usually, the inlet ports on the perfusion conduit will be located at a location as close to the proximal side of the occlusion as possible in order to minimize the length of perfusion lumen through which the blood will have to flow. In some instances, however, it may be necessary to position the inlet ports sufficiently proximal to the occlusion so that they lie in a relatively patent arterial lumen to supply the necessary blood flow and pressure. The cross-sectional area of the perfusion lumen will be maintained as large as possible from the point of the inlet ports to the outlet ports. In this way, flow resistance is minimized and flow rate maximized to take full advantage of the natural pressure differential which exists.

While perfusion is maintained through the perfusion conduit, treatment of the blood vessel blockage may be effected in a variety of ways. For example, thrombolytic, anticoagulant and/or anti-restenotic agents, such as tissue plasminogen activator (tPA), streptokinase, urokinase, heparin, or the like, may be administered to the patient locally (usually through the perfusion catheter) or systemically. In a preferred aspect of the present invention, such thrombolytic and/or anticoagulant agents may be administered locally to the arterial blockage, preferably through a lumen in the perfusion catheter itself. Such local administration can be directly into the thrombus, e.g., through side infusion ports which are positioned within the thrombus while the perfusion port(s) are positioned distal to the thrombus. Optionally, a portion of the blood which is being perfused could be added back to or otherwise combined with thrombolytic and/or anticoagulant agent(s) being administered through the catheter. The addition of blood to certain thrombolytic agents will act to catalyze the desired thrombolytic activity. The availability of the patient blood being perfused greatly facilitates such addition. It would also be possible to deliver the agent(s) through the same lumen and

distal port(s) as the blood being pumped back through the perfusion lumen so that the agents are delivered distally of the catheter. The latter situation may be used advantageously with neuroprotective agents, vasodilators, antispasmotic drugs, angiogenesis promoters, as well as thrombolytics, anticoagulants, and anti-restenotic agents, and the like. The two approaches, of course, may be combined so that one or more agents, such as thrombolytic agents, are delivered directly into the thrombus while neuroprotective or other agents are delivered distally to the thrombus. Moreover, such delivery routes can also be employed simultaneously with systemic delivery of drugs or other agents to the patient.

Alternatively or additionally, mechanical interventions may be performed while the vasculature is being perfused according to the present invention. For example, a perfusion conduit may have a very low profile and be used as a guide element to introduce an interventional catheter, such as an angioplasty catheter, an atherectomy catheter, a stentplacement catheter, thrombus dissolution device, or the like.

The perfusion of the oxygenated medium may be performed for a relatively short time in order to relieve ischemia (which may be advantageous because of damaged capillaries and/or blood-brain barrier) while other interventional steps are being taken, or may be performed for a much longer time either in anticipation of other interventional steps and/or while other long-term interventions are being performed. In particular, when thrombolytic and/or anticoagulant agents are being used to treat the primary blockage, the perfusion can be continued until the blockage is substantially relieved, typically for at least thirty minutes, often for four to eight hours, or even 2–3 days. In other instances, perfusion can be maintained for much longer periods, e.g., more than one week, more than two weeks, more than a month, or even longer. In some cases, it may even be desirable to maintain perfusion and placement of the perfusion conduit for an extended period of time with the patient having a portable or implantable pump coupled to the conduit. The pump may also have a reservoir for delivery of therapeutic agents and may be implanted or carried on a belt or the like.

The ability of the present invention to provide for gradual or controlled restoration of physiologic blood perfusion pressures and flow rates is a particular advantage when subsequent interventional steps would otherwise result in abrupt restoration of blood flow. As described above, abrupt restoration of blood flow can cause or contribute to reperfusion injuries. By providing for controlled restoration of blood flow prior to such interventional steps, the ischemic tissue can be conditioned to tolerate physiologic blood flow rates and pressures prior to full restoration by dissolution or other removal of the occlusion. Such gradual restoration of blood flow from very low levels to physiologic flow rates can typically be achieved over time periods in the range from one minute, an hour or even up to 48 hours or longer. Perfusion at controlled pressure and/or flow rate may last typically in the range of 30 minutes to 2 hours, more typically 30 minutes to 9 hours. It will be desirable, for example, to initiate perfusion through the perfusion conduits of the present invention at mean arterial pressures downstream of the occlusion which are no greater than 25–50% of normal with typical pressures being 20–40 mmHg. The blood flow rates which correspond to such pressures will depend largely on the nature of the vasculature into which the blood is being perfused and may be less than 200 ml/min, less than 150 ml/min and even less than 100 ml/min.

In addition to delivering oxygen to the ischemic region distal to the primary occlusion, the blood or other oxygenated medium may carry other treatment agents, including thrombolytic agents, anticoagulant agents, tissue preservative agents, and the like. Moreover, in order to further preserve the cerebral tissue distal to the blockage, the oxygenated medium may be cooled to below body temperature, e.g., to a temperature in the range from 2° C. to 36° C., typically from 25° C. to 36° C., in order to cool and preserve the tissue. Cooling may be effected externally as part of the extracorporeal pumping system and/or may be effected using a thermoelectric or Joule-Thomson expansion cooler on the catheter itself.

Patients suffering from ischemia resulting from acute or chronic occlusion in the cerebral vasculature may be treated according to the preferred methods described below. A perfusion conduit is introduced to the patient's vasculature, and a distal port on the conduit is guided through the occlusion in the cerebral vasculature. Blood, optionally oxygenated and/or superoxygenated, is obtained from the patient and perfused back to the patient through the distal port on the conduit past the occlusion at a rate sufficient to relieve the ischemia. The oxygenated blood may be arterial blood which may be returned to the patient without further oxygenation. Alternatively, arterial or venous blood can be oxygenated in suitable apparatus external to the patient and returned to the patient. External oxygenation allows the blood to be "superoxygenated," i.e., oxygenated at higher levels than would normally be available from arterial blood. Usually, the method further comprises delivering a therapeutic agent to the patient while the perfusing step is continued, usually being a thrombolytic agent which is delivered through the conduit directly to the vascular occlusion. The occlusion is usually in either a carotid artery, vertebral artery, proximal subclavian artery, brachiocephalic artery, or an intracerebral artery, and the conduit is usually introduced via the femoral artery in a conventional intravascular approach, typically being positioned over a guidewire which is first used to cross the occlusion. Alternatively, the conduit may be introduced through the axillary or brachial arteries, also in a conventional manner.

Apparatus according to the present invention comprises perfusion/infusion catheters which include a catheter body having a proximal end and a distal end. The catheter body has at least a perfusion lumen and may have other lumens. The catheter may be tapered or may have a constant cross-sectional shape. The catheter may be formed as a single, multi-lumen or single-lumen extrusion or the lumens may be formed as separate tubes. When formed as separate tubes, the tubes may be fixed relative to each other or may be provided with appropriate sliding seals to permit them to slide relative to each other. Additional lumens and/or tubes may also be provided for purposes discussed in more detail below. Often, although not always, the catheters will be free from external dilatation balloons or other external structure which could complicate penetration of the distal end of the catheter through an obstruction.

A first embodiment of the catheter is characterized by a large diameter proximal section and a small diameter distal section, where at least two isolated lumens extend from the proximal end of the catheter body through both sections to near the distal end of the catheter body. One of the lumens will extend entirely through the catheter body and usually have side ports over a distal length thereof. The other lumen will usually terminate some distance proximal of the distal tip of the catheter body and will also usually have side ports over a distal length thereof. The proximal section has an outer diameter in the range from 1 mm to 3 mm, usually from 1.5 mm to 2.5 mm, and typically from 1.5 mm to 2 mm,

and the distal section has an outer diameter in the range from 0.5 mm to 2 mm, preferably from 0.5 mm to 1.5 mm. The first isolated lumen which extends entirely through the catheter body will usually be tapered, i.e., have a larger diameter over a proximal length thereof than over a distal length thereof. Usually, the first isolated lumen will have an inner diameter in the range from 0.75 mm to 1.25 mm in the proximal section, more usually being from 0.9 mm to 1.1 mm in the proximal section, and an inner diameter in the range from 0.25 mm to 1 mm in the distal section, usually being from 0.3 mm to 0.75 mm in the distal section. The second isolated lumen will usually be disposed annularly about the first isolated lumen and will have an inner diameter in the range from 0.9 mm to 2.9 mm in the proximal section, usually from 1.4 mm to 1.9 mm in the proximal section, and an inner diameter in the range from 0.4 mm to 1.9 mm in the distal section, usually in the range from 0.5 mm to 1.5 mm in the distal section. The second, outer annular lumen will typically terminate from 5 cm to 25 cm from the distal end of the catheter body.

The catheter may also have a larger flow conduit for achieving higher flow rates. For example, the inner diameter of the first lumen may be 1.5–3.0 mm in the proximal section and 1.0–2.0 mm in the distal section. The second lumen has an inner diameter which is preferably 0.25–1.0 mm larger than the outer diameter of the first lumen. The wall thickness of the first lumen is preferably between 0.07–0.20 mm. If the catheter has a straight instead of tapered configuration the inner diameter of the first lumen is preferably 1.5–2.5 mm.

The catheter of the present invention may, of course, have any other suitable tapered shape or may have a constant cross-sectional profile. For example, in another preferred embodiment, the first catheter has the perfusion lumen, and in a specific embodiment no other fluid lumens. Such a catheter has a small, flexible construction which can be passed through tortuous vessels. Other catheters may be advanced over the perfusion catheter to remove or displace the obstruction as discussed below. The catheters may be another fluid perfusion catheter for delivery of thrombolytic agents or may be an obstruction removal catheter which removes the obstruction with mechanical action or with an ultrasound transducer, RF electrode or a laser.

In another aspect of the present invention, the perfusion conduit is advanced through the cerebral vasculature to the obstruction and an obstruction removal catheter is advanced through the perfusion lumen to remove the obstruction. Thus, the perfusion conduit acts as a fluid conduit and/or a guide catheter for reaching distal regions of the cerebral vasculature. The system of the present invention permits the introduction of catheters through the perfusion lumen to regions as distal as the middle cerebral artery **M1** and **M2** segments, anterior cerebral artery **A1** and **A2** segments, and the basilar artery or other similarly sized vessels which are typically accessed with guidewires. The obstruction removal catheter may be a balloon, stent, perfusion, RF, ultrasound, laser or mechanical atherectomy catheter for removing the obstruction.

The present invention is also directed to a system having a balloon catheter and an infusion catheter. The balloon catheter has at least one lumen extending therethrough. The second catheter has a guide tip and fluid infusion openings in a distal region. Both catheters have a proximal region which has a cross-sectional area greater than the distal region. The second catheter is slidably received in the first catheter so that the guide tip and the fluid infusion openings can extend distally from the first catheter.

In another method of the present invention, a method of performing balloon displacement of an obstruction in a patient's vasculature is provided. A balloon catheter is guided over a guidewire to a site in a patient's vasculature. The guidewire is then removed. An infusion catheter is then introduced through the balloon catheter. The infusion catheter is advanced through the balloon catheter so that the tip extends beyond the balloon catheter. An infusate is then delivered through the infusion catheter.

In still another aspect of the present invention, a balloon catheter is provided which is configured to be guided through the perfusion catheter. The balloon catheter has no guidewire lumen and no other structure to track over a guidewire thereby reducing the size of the catheter. The distal end of the balloon catheter preferably has a smooth, rounded tip to penetrate the obstruction if necessary. The balloon catheter may have a tapered shape similar to the perfusion catheter.

Apparatus according to the present invention further comprises systems including a perfusion/infusion catheter as set forth above in combination with a sheath for percutaneously introducing the perfusion/infusion catheter and a pump for receiving blood from the sheath and delivering blood back to the catheter. Optionally, an infusion device may be provided in the system for infusing a drug to a lumen of the perfusion/infusion catheter. Preferably, the systems will include control apparatus for controlling blood infusion pressures, blood infusion flow rates, pO2, pCO2, pH, temperature, and/or other parameters of the blood/oxygenated medium being perfused back to the patient. The present invention still further comprises kits, including a perfusion catheter and instructions for use setting forth a method for penetrating the catheter through a blockage in a patient's vasculature and thereafter perfusing an oxygenated medium through the conduit to relieve ischemia. Kits will usually further comprise a container, such as a pouch, tray, box, tube, or the like, which contains the catheter as well as the instructions for use. Optionally, the instructions for use set forth on a separate instructional sheet within the package, but alternatively could be printed in whole or in part on the packaging itself. Optionally, other system components useful for performing the methods of the present invention could be provided within the kit, including guidewires, introductory sheaths, guiding catheters, and the like.

## BRIEF DESCRIPTION OF THE DRAWINGS

FIGS. **1A–1C** illustrate an exemplary protocol for treating a total occlusion in a blood vessel according to the method of the present invention.

FIG. **2** illustrates an exemplary system for treating a total occlusion within a patient's cerebral vasculature according to the present invention.

FIG. **3** is a cross-sectional view taken along line **3—3** of FIG. **2**.

FIG. **4** is a cross-sectional view taken along line **4—4** of FIG. **2**.

FIG. **5** is a cross-sectional view taken along line **5—5** of FIG. **2**.

FIG. **6** is a cross-sectional view taken along line **6—6** of FIG. **2**.

FIG. **7** illustrates a protocol using the system of FIG. **2** for treating a cerebral occlusion according to the present invention.

FIG. **8** is a detailed view of the catheter used for treating the occlusion in the protocol of FIG. **7**.

FIG. **9** illustrates a kit including components according to the present invention.

FIG. **10** illustrates an alternative embodiment of a perfusion conduit constructed in accordance with the principles of the present invention.

FIG. **11** illustrates yet a further embodiment of a perfusion conduit constructed in accordance with the principles of the present invention.

FIG. **12** illustrates yet another exemplary embodiment of a perfusion conduit constructed in accordance with the principles of the present invention.

FIG. **13** illustrates another perfusion catheter with a second catheter advanced over the perfusion catheter.

FIG. **14** illustrates a perfusion used in connection with the catheters of FIG. **13**.

FIG. **15** illustrates another perfusion catheter having a balloon inflated by fluid infused through the fluid lumen;

FIG. **16** illustrates a still another perfusion catheter having a balloon with an inflation lumen.

FIG. **17** illustrates a perfusion catheter with a stent delivery catheter advanced over the perfusion catheter.

FIG. **18** illustrates a perfusion catheter with a balloon catheter advanced over the perfusion catheter.

FIG. **19** shows another system for treating a cerebral obstruction.

FIG. **20** shows a balloon catheter displacing an obstruction in a cerebral artery.

FIG. **21** shows another balloon catheter having a second lumen.

FIG. **22** shows a stent displacing an obstruction in a cerebral artery.

FIG. **23** shows a perfusion catheter for removing the obstruction.

FIG. **24** shows another system for treating a cerebral obstruction having first and second tapered catheters.

FIG. **25** is an enlarged view of the distal end of the catheters of FIG. **23**.

FIG. **26** is a cross-sectional view of the distal end of the catheters of FIGS. **23** and **24** with a lumen in a relaxed state;

FIG. **27** is a cross-sectional view of the catheters of FIG. **23** with the lumen expanded.

FIG. **28** is shows the system of FIG. **24** with an alternative second catheter having an expandable lumen.

FIG. **29** shows the catheter of FIG. **29** having an expandable sidewall in a collapsed condition.

FIG. **30** shows the expandable sidewall in an expanded position.

## DESCRIPTION OF THE SPECIFIC EMBODIMENTS

The general principles of the present invention for treating partial and total occlusions within a patient's vasculature will be described in connection with FIGS. **1A–1C**. A blood vessel BV which is usually an artery, more usually a cerebral artery, such as a carotid artery, vertebral artery, or an intracerebral artery, is obstructed by a total occlusion TO. The occlusion may result from thrombosis at a pre-existing atherosclerotic lesion or may result from the shedding of an embolus from an artery which flows distally to the particular vessel in which the occlusion occurs. Usually, the occlusion will occur abruptly and the sudden loss of perfusion through the blood vessel distal to the total occlusion TO will place the patient at great risk of neuron death. As discussed above in the Background section, it is usually necessary to reestablish perfusion within a matter of hours in order to avoid significant tissue damage or death, particularly in the case of strokes. While six hours is often considered a maximum delay, earlier treatment is much more desirable.

The present invention provides a method for very quickly reestablishing perfusion through the total occlusion TO in a controlled manner. Such perfusion is established using a perfusion conduit **10** (FIG. **1C**) through which oxygenated blood or an oxygenated synthetic medium, such as a perfluorocarbon oxygen carrier, is actively pumped back through a lumen of the catheter from a source **12**. Usually, the conduit will include side perfusion ports **14** near its distal end **16** in order to less traumatically disperse the perfused fluid. Optionally, proximal portions of the conduit **10** (not shown) may have enlarged lumen diameters in order to reduce flow resistance and shear forces to further reduce or prevent hemolysis. It will be appreciated that while the distal portion of the conduit **10** will usually have a relatively low profile to access small diameter blood vessels, the proximal portions can be made significantly larger to improve the hemodynamic flow and handling characteristics and reduce hemolysis.

Optionally, the conduit **10** will be introduced over a conventional guidewire GW which may be initially used to cross the total occlusion TO, as shown in FIG. **1B**. In other instances, however, the perfusion conduit **10** may be adapted so that it is able to cross the total occlusion TO without the use of a conventional guidewire. In some cases, the perfusion conduit may be in the form of a guidewire, e.g., a tapered guidewire, which is suitable for both guiding through the vasculature to the site of the total or partial occlusion as well as crossing the occlusion.

The perfusion conduit **10** may be introduced from any normal intravascular introduction site, e.g., through the femoral artery using the Seldinger technique. Alternatively, the infusion conduit can be introduced through the axillary and other arteries.

A system **20** suitable for treating occlusions within the cerebral vasculature is illustrated in FIGS. **2–6**. The system **20** includes a perfusion conduit in the form of intravascular catheter **22**. The catheter **22** comprises a catheter body **24** having a distal end **26** and a proximal end **28**. The catheter body **24** comprises a pair of coaxial tubular elements, including an outer tube **30** and an inner tube **32**. Proximal hub **34** comprises a first port **36** which is fluidly coupled to an interior lumen of the inner tube **32** and a second port **38** which is fluidly coupled to an annular lumen between the exterior surface of outer tube **32** and the interior of tube **30**. Proximal port **40** (typically a hemostasis valve) also communicates with the lumen of the inner tubular member **32** and is suitable for intravascular positioning of the catheter **22** over a guidewire.

The system usually further includes a guiding catheter **50** having dimensions and characteristics suitable for introducing the catheter **22** to the desired intravascular target site. Although illustrated as having a straight configuration, the guiding catheter **50** will often have a preformed, curved tip selected specifically to reach the intravascular target site, and the guiding catheter could further be reinforced (e.g., braided), have a variable stiffness over its length, have a variable diameter, or the like. The system **20** will usually still further comprise a sheath **60** which is used to percutaneously access the vasculature at the introductory site, e.g., in the femoral artery. The sheath **60** has a proximal hub **61** including at least one side arm **62**. The hub **61** receives the catheter **22** therethrough and will include a mechanism for maintaining hemostasis about the catheter. The side arm **62** permits

withdrawal of blood for oxygenation and return to the patient according to the present invention. Other side arm(s) may be provided for removal of blood (optionally combined with drugs being delivered back to the patient), for infusing agents through the sheath **60**, or for other purposes. Entry of blood into the lumen of the sheath is optionally facilitated by side ports **64** formed over at least a distal portion of the sheath. The catheter body **24** is tapered in the distal direction, i.e., the diameter is larger near the proximal end **28** than at the distal end **26**. As illustrated in FIGS. **2–6**, the outer tube **30** has a large diameter proximal section (observed in FIG. **3**) and a smaller diameter distal section (observed in FIGS. **4** and **5**). Similarly, the inner tube **32** has a large diameter proximal section (shown in FIG. **3**) and a smaller diameter distal section (shown in FIGS. **4–6**). The particular outer diameters and inner lumen diameters of both the outer tube **30** and inner tube **32** are within the ranges set forth above. Since the distal terminii of the outer tube **30** and inner tube **32** are staggered, the catheter body **24** is tapered in three stages, with a first diameter reduction occurring at location **33** (FIG. **2**) where the diameter of the outer tubular member **30** is reduced from the diameter shown in FIG. **3** to the diameter shown in FIG. **4**. The second diameter reduction occurs at location **35** where the outer tubular member **30** terminates, leaving the outer surface of the inner tubular member **32** to define the catheter body.

Such tapered configurations are preferred since they maximize the cross-sectional area of the flow lumens over the length of the catheter to reduce flow resistance for both the blood (or other oxygenated medium) and the drug to be delivered. As can be seen in FIG. **3**, lumen **70** of the inner tubular member **32** which carries the blood is maximized until the diameter is reduced near the distal end of the catheter, as shown in FIG. **4**. Similarly, the annular lumen **72** which carries the drug is maximized over the proximal portion before it is reduced after the transition at location **33**. Maintaining the larger diameters and lumen areas is desirable in order to decrease flow resistance and shear forces to reduce or eliminate hemolysis as the blood is introduced through the entire catheter length. Similarly, a reduction in flow resistance to the drug being introduced facilitates drug delivery during the procedure.

Side wall penetrations **80** are provided in a distal portion **26** of the outer tubular member **30**, as best seen in FIGS. **2** and **5**. The penetrations **80** will be useful for delivering a therapeutic agent through port **38** in order to treat the primary occlusion, as described in more detail hereinafter.

Similarly, ports **90** may be formed over at least a distal portion of the inner tubular member **32** which extends beyond the distal end of the outer tubular member **30**. The penetrations **90** will be available to release blood or other oxygenated medium that is being perfused back to the patient through port **36** and the continuous lumen of the tube **32**. Note that while the lumen **70** of tube **32** will be available for introduction of the catheter **22** over a guidewire, the guidewire may be at least partially withdrawn from the lumen **70** in order to further decrease blood flow resistance as it is perfused back to the patient.

Optionally, the catheter **22** may comprise at least one pressure sensing element **96** disposed at a location near where the blood or other oxygenated medium is returned to the blood vessel. Preferably, the pressure sensing element **96** may be a piezoelectric or other solid state pressure sensing device and will be connected through the hub **34** by a pair of wires **97** which may be connected to conventional electronic devices for measuring pressure. Thus, pressure may be measured and used for controlling rate and/or pressure of blood or other oxygenated medium pumped back to the patient using conventional analog or digital control circuitry. A pressure control point will be selected, usually within the ranges set forth above, and the rate or pressure of oxygenated medium being pumped back through the catheter **22** will be controlled to maintain the control point. Conventional control algorithms, such as proportional, derivative, integral, and combinations thereof, may be employed for maintaining the desired control point.

In some instances, it will be desirable to provide at least a second pressure sensing element **98** which will be located proximal to the obstruction when the catheter is in use. For example, the pressure sensing element **98** may be near the location **35** where the outer tubular member **30** terminates. The sensor **98** will permit monitoring of the pressure in the vasculature proximal of the occlusion, which pressure will usually approximate that of the vasculature in the region of the occlusion prior to an acute occlusion event. This pressure, in turn, may be utilized as a target pressure for the blood or other oxygenated medium which is being perfused distal to the occlusion. That is, it may be desirable to treat the measured "background" pressure as a maximum desirable pressure for perfusion in order to prevent injury to the vasculature distal to the occlusion.

Referring now to FIG. **7**, use of the system **20** for treating the cerebral vasculature of a patient P will be described. Access to the target cerebral artery is established using the sheath **60** in a conventional manner. The guiding catheter **50** is then introduced through the sheath **60** and establishes a protected access lumen to a location within the cerebral vasculature. The catheter **22** is then introduced through the guiding catheter to the target site within the cerebral vasculature, typically over a guidewire (not illustrated). Conveniently, the catheters will be partly radiopaque and/or radiopaque markers **92** (FIG. **2**) will be provided at the distal tip of the catheter as well as on either side of the drug ports **80** so that the catheter **22** may be properly positioned under fluoroscopic guidance relative to the obstruction being treated. After the tip **26** of the catheter **22** is penetrated through the occlusion TO (FIG. **8**) the penetrations **80** are preferably located within the occlusive material in order to deliver the thrombolytic or other agent to the material. The distal portion of the catheter, including ports **90**, in contrast, are located beyond the occlusive material in order to provide the desired blood perfusion. Blood flow is immediately established using an external pump **100** which receives blood from the port **62** of access sheath **60** and returns the oxygenated blood to the catheter **22** through port **36**. Any suitable therapeutic agent, such as a thrombolytic agent, may be introduced through port **38** from a source **102**. Any other suitable drugs may also be delivered from the source **102** and through the port **38**. Optionally, the blood may be cooled before, during, or after it has passed through the pump unit **100**. Still further optionally, the blood may be oxygenated or superoxygenated using an oxygen-saturated bubble chamber or conventional cardiopulmonary bypass oxygenators ORS. In some instances, it may be desirable to combine the thrombolytic agent with a portion of the recirculating blood before infusing the thrombolytic agent/blood back through the port **38**.

Optionally, the pump unit **100** may be controlled by an analog or digital control unit **110** (FIG. **7**). The control unit **110** will receive various input control parameters **112**, typically including at least oxygenated medium flow rate and pressure. Other control parameters, such as pO2, pCO2, pH, temperature, and the like, may also be input into the control unit **110**. In turn, the control unit will provide a control

output **114**, typically at least to the pump unit **100** to control output flow and pressure, as described above. If control of other parameters is desirable, other capabilities may be added, such as the ability to control the degree of oxygenation in the medium supplied by source **102**, the ability to add pH modifiers, such as buffers, bicarbonate, and the like, to the oxygenated medium, the ability to control a heat exchanger located in the blood flow circuit, and the like. The source **102** may provide any of the various drugs or therapeutic agents described herein for delivery through the ports.

Kits according to the present invention are illustrated in FIG. **9**. The kit will include a perfusion conduit, such as perfusion conduit **10**, as well as instructions for use **120**. The catheter and instructions for use will usually be combined within a suitable container, such as a pouch, tray, box, tube, or the like. The catheter and possibly other components of the system (such as guide catheters, sheaths, thrombolytic or other therapeutic agents, disposable cartridges for pump/oxygenation systems, or the like) will optionally be included and/or sterilized within the packaging. The instructions for use may be on a separate sheet of paper or may be printed in whole or in part on the packaging materials. The instructions will set forth a method of using the devices in any manner described herein. Furthermore, the kit may include any grouping of instruments described herein without departing from the scope of the invention.

Referring now to FIG. **10**, a perfusion conduit **200** includes an inner tube **202** and outer tube **204**. The inner tube has perfusion ports **206** formed in its side wall over a portion of the distal end, and the outer tube **204** has perfusion ports **208** formed over a portion of its distal end. The perfusion conduit **200** differs from catheter **22** primarily in that the inner tubular member **202** is able to slide axially relative to the outer tubular member **204**. A sliding seal **210**, typically an O-ring or similar passive seal, is provided to maintain pressure within the lumen of outer tubular member **204** so that thrombolytic and other drugs can be delivered without excessive loss through the distal tip. Some loss of the agent, however, will usually be acceptable so that the seal need not be completely tight. If a more positive seal is desired, an inflatable balloon **211** (shown in broken line) may be provided in addition to or in place of the sliding seal **210**. Use of the balloon **211** is advantageous in that it permits higher infusion pressures without leakage from the distal end of the outer tube **204**, but disadvantageous in that it limits the range of axial placement of the outer tube **204** relative to the inner tube **202**. Use of the inner tube **202** for perfusing blood or other oxygenated medium therethrough will generally be as described with the prior embodiments. Radiopaque markers **212** and **214** on the inner tube **202** will be positioned distally of the occlusion to assure that the perfusion ports **206** will release the delivered blood with minimal resistance. Radiopaque markers **216** and **218** on outer tube **208**, in contrast, will be positioned so that the infusion ports **208** lie generally within the occluded region. Optionally, the balloon **212** will be inflated to both lock the inner and outer tubes relative to each other and to provide a positive seal at the distal end of the outer tube, and the thrombolytic or other therapeutic agent will then be delivered through the lumen of the outer tube into the occlusive material, such as thrombus.

Referring now to FIG. **11**, a perfusion conduit **300** also includes an inner tube **302** and an outer tube **304**. The inner and outer tubes are slideable relative to each other, and a sliding seal **310** is provided at the distal end of the outer tube **304**. The perfusion conduit **300**, in contrast to prior embodiments, is not intended to deliver a therapeutic agent. Instead, it is intended only to perfuse blood or other oxygenated medium therethrough. The lumen **312** within the outer tube **304** is intended for passing the blood or other oxygenated medium to near the distal end of the conduit **300**. The inner tube **302** then receives the blood or other oxygenated medium through ports **314** which permit the medium to flow from lumen **312** into the interior lumen of the tube **302**. An enlarged portion **316** of the tube **302** is provided in order to prevent axial advancement of the tube so that the ports **314** cannot extend outside of the outer tube **304**. Alternatively or additionally, an inflatable balloon **316** may be provided in order to both prevent excess axial advancement of the inner tube **302** and provide a more positive seal. Usually, since the blood will be perfused at lower pressures than might be used for drug delivery, use of the balloon **316** for isolation will often not be necessary. The perfusion conduit **300** can thus provided reduced flow resistance for the blood or other oxygenated medium being returned to the patient through the conduit. Additionally, the ability to slide the outer tube **304** relative to the inner tube **302** helps the tubes be properly positioned relative to each other depending on the circumstances of the patient being treated.

Referring now to FIG. **12**, a perfusion conduit **400** intended for passive perfusion, i.e., without active pumping, is illustrated. The catheter **400** usually comprises a single extrusion having a proximal section **402** with an enlarged diameter and a distal section **404** with a reduced diameter. The proximal and distal diameters will generally be in the ranges set forth above. Blood inlet ports **408** are provided on the catheter near its proximal end while blood outflow ports **410** are provided near the distal end. The relative positions of the inflow ports **408** and outflow ports **410** allow the perfusion conduit **400** to be introduced to a patient so that the inflow ports are proximal to the occlusion while the outflow ports **410** are distal to the occlusion. The inflow ports **408** are usually relatively near to the distal end of the proximal section **402** having the enlarged diameter in order to decrease the overall flow resistance between the inflow ports **408** and outflow ports **410**. Generally, however, the inflow ports **408** will be positioned so that they will lie proximally of the occlusion so that the occluding material does not block blood flow into the inflow ports. In some instances, they will be spaced proximally of the transition **412** from large diameter to small diameter by a distance in the range from 1 cm to 15 cm, usually from 2 cm to 10 cm, to assure proper placement in the vasculature. The inflow ports **408** are thus able to receive blood and pass the blood distally through the large diameter section with minimum pressure drop. A pressure drop through the narrow diameter section **404** will be greater, in many instances the total pressure drop of the conduit **400** will be sufficiently low so that adequate blood perfusion can be maintained to relieve patient ischemia. Optionally, the conduit **400** could have a slideable structure, as shown in conduit **300** of FIG. **11**, but such structure will increase the flow resistance and will not be preferred in all instances. The conduit **400** preferably has a ID of 0.5 mm to 1.8 mm, more preferably 0.75 to 1.5 mm, between the inflow and outflow ports.

Referring to FIGS. **13** and **14**, another catheter **500** is shown which has a perfusion conduit **502**. The catheter **500** has a rounded, atraumatic distal end **504** which is preferably guided through the vasculature over a guidewire which is advanced ahead of the catheter **500**. The perfusion conduit **502** may have any of the shapes and sizes discussed herein and preferably has a cross-sectional size of 0.77 to 7.1 $mm^2$, more preferably 1.7 to 2.9 $mm^2$ along a distal portion **506** of

the catheter **500**. In order to maintain adequate flow rates at acceptable pressures, the cross-sectional size is preferably at least 1.7, more preferably at least 3.0 and most preferably at least 4.2 $mm^2$ along the distal portion **506**. The distal portion **506** extends for a length of at least 5, 10,15, 20 or 25 cm from distal end **507** or from the most proximal outlet **518**.

The catheter **500** and conduit **502** are sized large enough to provide sufficient blood flow rates while blood pressure is within allowable limits to prevent hemolysis. Specifically, the conduit **502** is sized so that the pressure of oxygenated blood in the catheter is 0–400 mmHg, more preferably 20–350 mmHg, at blood flow rates of at least 30, 80, 120 or 160 ml/min. Furthermore, the overall length of the catheter **500** is preferably at least 120, 150 or 175 cm depending upon the access site and size of the patient.

The overall maximum outer dimension of the catheter **500** shaft along the distal portion **506** is preferably no more than 1.6 mm, 2.3 mm, or 3.2 mm. The various diameters and dimensions given throughout the application are equally applicable to any other suitable embodiments described herein. For example, all catheter dimensions discussed above are suitable dimensions for catheter **500** and all dimensions for catheter **500** are applicable to other catheters described herein. Although catheter **500** may include additional open lumens, such as balloon inflation, vent or pressure lumens, the catheter **500** preferably includes only the perfusion conduit **502** to minimize the overall size. The catheter **500** may also be a passive inflation catheter such as the passive inflation catheter **400** of FIG. **12**.

The catheter **500** may include proximal and distal pressure sensors **510**, **512** for measuring pressure on both sides of the obstruction. In a preferred embodiment, the catheter **500** has only one pressure sensor **512** and only the perfusion conduit **502**. Wires **514** extending through or along shaft are coupled to a pressure monitor **516** which in turn is integral with or coupled to the control unit **110** for controlling the pump **100** in any manner described herein. The distal pressure sensor **512** is preferably positioned a distance A which is at least 0.5 cm more preferably at least 1 cm, from the most proximal outlet **518** so that pressure measurement is not distorted by flow forces from the fluid perfused through the outlets **518**. A heater and/or cooler **517** is also provided for heating or cooling the oxygenated medium. The control unit **110** also receives input control parameters **112** with the parameters measured with suitable sensors along the fluid line.

The pressure is preferably maintained below normal arterial pressure for a period of time to protect the previously ischemic bed from reperfusion injury. The inventor believes that prematurely exposing the ischemic bed to normal arterial pressure may cause reperfusion injury and that maintaining low pressure for a period of time can minimize or eliminate reperfusion injury. Low pressure in the previously ischemic bed can be maintained by pressure feedback control of the pump **100** as mentioned above. Alternatively, low pressure can be maintained without direct measurement and feedback by simply selecting low perfusion flow rates.

A second catheter **520** is slidably coupled to the catheter **500** and is advanced into the vascular system with the catheter **500** guiding the second catheter **520** to the obstruction. The catheter **500** passes through a hemostasis valve **521** in the second catheter **520**. The second catheter **520** passes over the catheter **500** but may also have an interlocking relationship with the catheter **500**. The second catheter **520** may also be completely independent from the catheter **500** since advancing the second catheter **520** quickly may not be necessary with catheter **500** perfusing and protecting the previously ischemic vascular bed.

The second catheter **520** has a lumen **522** defined by the annular space between the catheters **500**, **520**. The lumen **522** may be used to deliver liquids, including any of the therapeutic agents described herein such as a thrombolytic agent, from a liquid source **524**. The second catheter **520** may also be coupled to a vacuum source **526** to vent blood, therapeutic byproducts and emboli through lumen **522**.

The second catheter **520** may also include an obstruction removal device **528** for removing the obstruction. The obstruction removal device **528** may simply be the distal tip of the catheter **520** which is used to mechanically remove the obstruction. The obstruction removal device **528** may also be any suitable non-mechanical device such as an ultrasound transducer, an RF electrode, or a laser. FIG. **13** shows the obstruction removal device **528** as an ultrasound transducer coupled to a power source **531** (FIG. **14**) with wires **534**. The wires **534** may float within lumen **522** or may be embedded in the wall of the catheter **520**. If the obstruction removal device is an RF electrode, a suitable second electrode (not shown) is placed in contact with the patient's body for monopolar RF or on either catheter **500**, **520** for bipolar RF. An electrically conductive fluid, such as saline, may be passed through the lumen **522** from the liquid source **524** during activation of the RF electrode for enhanced conduction. Thus, the second catheter **520** is used to remove the obstruction by mechanical disruption, delivery of obstruction removing liquids through the lumen **522** or use of any of the other suitable devices mentioned above.

Referring to FIG. **15**, another perfusion catheter **600** is shown which has a perfusion conduit **602**. The catheter **600** also has an expandable member **604** which is preferably an inflatable balloon **606** but may also be a mechanically actuated device. The expandable member **604** prevents the previously ischemic bed from being exposed to full arterial pressure if the obstruction is cleared prematurely before the perfusion therapy is completed. The balloon **606** may also be used to prevent parts of the obstruction or other emboli from flowing downstream before therapeutic agents or other obstruction removing methods are used to dissolve, destroy, displace or otherwise remove the obstruction.

The balloon **606** has an inflation hole **608** leading to the perfusion conduit **602** so that perfusion of fluid through the conduit **602** inflates the balloon **606**. An advantage of using the perfusion conduit **602** to inflate the balloon **606** is that a separate inflation lumen is not required which minimizes the size of the catheter **600**. Referring to FIG. **16**, the perfusion catheter **600** may also include a separate inflation lumen **610** for inflating the balloon **606** so that the balloon **606** may be selectively inflated independent of perfusion. The balloon **606** may also be used for flow-directed placement of the catheter **600**.

Referring to FIG. **17**, a stent delivery catheter **700** is passed over the perfusion catheter **500**, which may be any of the perfusion catheters described herein, and a balloon **702** is used to expand a stent **704** and open the artery. Referring to FIG. **18**, a balloon catheter **706** having a balloon **708** is advanced over the perfusion catheter **500**. The balloon **708** is expanded in the obstruction to displace the obstruction and open the artery. An advantage of the present system is that the perfusion catheter **500** perfuses and protects of the previously ischemic bed while the stent **704** or balloon **708** is positioned and deployed.

Referring to FIG. **19**, another system **710** for treating the cerebral vasculature is shown. The system **710** includes the

catheter **500** which may be any of the catheters **10**, **400**, **600** described above or any other suitable alternative. A catheter **712** passes through the catheter **500** and is used to remove or displace the obstruction in the cerebral vasculature. As will be described in specific embodiments below, the catheter **712** may be a balloon catheter **714** (FIGS. **20** and **21**), a stent catheter **716** (FIG. **22**) or a perfusion catheter **718** (FIG. **23**). The catheter **712** may, of course, use any other suitable method for removing the obstruction including a laser, microwave, ultrasound, RF or a mechanical device.

The system **710**, and in particular the catheter **500**, may also be used in any manner described above. For example, the catheter **500** may be used to infuse oxygenated medium to treat an ischemic region prior to introduction of catheter **712**. After infusion of the oxygenated medium for a period of time, the catheter **712** is used as described below. The catheter **500** preferably has the dimensions and characteristics of any suitable catheter described herein. In particular, the lumen **502** preferably has the necessary dimensions to provide for adequate infusion while being small enough to provide a flexible catheter which can pass into distal regions of the cerebral vasculature. The distal portion is preferably at least 5, 10 15 or 20 cm in length. The lumen along the distal portion has a cross-sectional area of 0.45 to 2.3, more preferably 0.62 to 1.8, and most preferably 0.62 to 1.7 $mm^2$. When the cross-sectional shape of the lumen is circular, the diameter of the lumen **502** is preferably 0.76–1.52 mm, more preferably 0.89–1.40 mm and most preferably 0.89–1.27 mm along the distal portion. The maximum cross-sectional dimension along the distal portion (which is simply the outer diameter for a circular cross-section) is preferably no more than 0.41 mm, 0.31 mm or 0.20 mm larger than the diameter of the lumen **502**. Thus, the maximum cross-sectional dimension is preferably no more than 1.2, 1.1 or 1.0 mm when the diameter of the lumen **502** is 0.76 mm.

The catheter **500** also preferably has a proximal portion which extends for a length of at least 75 or 100 cm. The lumen **502** has a cross-sectional area of 2.0–7.6, more preferably 2.8–5.6 $mm^2$, and most preferably about 3.2–5.1 $mm^2$ along the proximal portion. When the lumen **502** has a circular cross-sectional shape, the lumen **502** has a diameter of 1.52–2.92 mm, more preferably 01.09–2.67 mm, and most preferably 1.89–2.54 mm. The maximum cross-sectional dimension along the proximal portion is preferably no more than 0.41, 0.31 or 0.20 mm larger than the diameter of the lumen **502**. The catheter **500** may also have an intermediate section which has a length of 20–40 and preferably about 30 cm. The intermediate section has a cross-sectional size between the size along the proximal and distal sections. In a preferred embodiment, the intermediate section has a constant taper between the proximal and distal portions.

The catheter **500** has a hemostasis valve **713** which receives the catheter **712**. The introducer sheath **60** may also be used for introducing the catheter and for withdrawing and directing blood and other fluids from a fluid system **715** which is the system of FIG. **7** or **14** described above.

An advantage of the catheter **500** is that the catheter **500** can be used to guide the balloon catheter **714**, or any other catheter, to distal portions of the cerebral vasculature. Specifically, the catheter **500** is flexible enough to reach the middle cerebral artery M1 and M2 segments, anterior cerebral artery A1 and A2 segments, and basilar artery and preferably to distal regions which are accessible depending upon the size of the patient's vasculature. These regions are typically accessed by advancing the catheter over a guidewire rather than through another catheter. An advantage of using the catheter **500** rather than a traditional guidewire is that the catheter **500** protects the vasculature as the catheter **500** is advanced. Another advantage is that the catheter **500** may be used to infuse fluids, such as the oxygenated medium and therapeutic agents prior to, during and after introduction of the obstruction removal catheter **712**.

Referring to FIGS. **19** and **20**, the balloon catheter **714** has a balloon **718** which displaces the obstruction. An inflation lumen **720** is coupled to a source of inflation fluid **722** (FIG. **19**) for inflating the balloon **718**. The catheter **714** may have more lumens, however, the catheter **714** has only the inflation lumen **720** to minimize the size of the balloon catheter **714**. Since the catheter **714** does not track over a conventional guidewire, the catheter **714** also does not have a guidewire lumen or other structure to track over a guidewire which further reduces the size of the balloon catheter **714**. The balloon catheter **714** also preferably has no distal opening so that the catheter **714** has a smooth, atraumatic tip which can be advanced through the obstruction if necessary. Thus, the balloon catheter **714** of the present invention provides advantages over conventional balloon catheters which track over guidewires.

The balloon catheter **714** is preferably sized and configured to provide a space **723** between the catheters **714**, **500** so that the lumen **502** of catheter **500** may be used while the balloon catheter **714** is positioned therein. The balloon catheter **714** may generally have the tapered shape within the range of shapes of the catheters **500** so that the balloon catheter **714** essentially conforms to the shape of the lumen of the catheter **500**. Such a configuration facilitates advancement of the balloon catheter **714** through the catheter **500**. The distal portion of the catheter has a cross-sectional area of no more than 1.5 $mm^2$ more preferably no more than 1.0 $mm^2$ over a distal portion **724** of the catheter **714**. The distal portion **724** preferably extends at least 5 cm and more preferably at least 10 cm from a distal end **726**. The maximum outer dimension of the catheter **714** over the distal portion **724** may also be no more than 1.2 mm, 0.8 mm, 0.75 mm and most preferably no more than 0.65 mm in diameter.

In another preferred method of the present invention, the catheter **500** is advanced through the obstruction to infuse oxygenated medium into the ischemic bed as described above. When the ischemic bed has been adequately perfused at the desired rates and pressures, the catheter **500** may be withdrawn through the obstruction. During withdrawal of the catheter, the lumen **502** may be coupled to the vacuum source **526** to capture emboli (FIG. **19**). The balloon **718** may be positioned to lie within the obstruction as the catheter **500** is withdrawn, it may be advanced by itself through the obstruction after withdrawal of the catheter, or may be pulled back to lie within the obstruction by advancing the balloon beyond the obstruction within the catheter **500** before withdrawing the catheter **500**. Once the balloon **718** is positioned within the obstruction, the balloon **718** is inflated to displace the obstruction as shown in FIG. **20**. The lumen **502** may also be used to vent blood and thereby suction emboli while inflating the balloon **718**. Although the catheter **714** preferably has only the inflation lumen **722**, the catheter **714** may also have in infusion lumen **728** as shown in FIG. **21**. The infusion lumen **728** is coupled to the system of FIGS. **7** or **14** to infuse oxygenated medium and other fluids distal to the obstruction as described above, but the catheter **714** is otherwise used in the same manner as catheter **714**.

Referring to FIG. **22**, another system is shown which is similar to the system of FIG. **19** except that the stent catheter

716 is used instead of the balloon catheter 714. The stent catheter 716 is used in substantially the same manner as the balloon catheter 714 in that a stent 732 displaces the obstruction. The stent 732 is mounted to a balloon 734 having a lumen 736 coupled to the inflation source 722. The inflation lumen 736 is preferably sized like the lumen 728 and the preferred dimensions of the stent catheter 716 are the same as described above for the balloon catheter 714. The stent catheter 716 offers the same advantages as the balloon catheter 714 in that the stent catheter 716 does not require a guidewire lumen or other structure to track over a conventional guidewire. The stent 732 may be a suitable conventional stent 732 mounted to the catheter 716 of the present invention. The stent catheter 716 may also have a perfusion lumen and outlet 719, which may be a number of outlets or sideholes, for perfusing fluids as described above.

Referring to FIG. 23, the catheter 712 may also be the perfusion catheter 718 which passes through the catheter 500. The perfusion catheter 718 has a lumen 738 coupled to a source of solution 740 which is used to remove or dissolve the obstruction (FIG. 19). The perfusion catheter 718 is advanced through the catheter 500 so that openings 740 are positioned in or near the obstruction. The openings 740 may be at the distal end or spaced from the distal end. The catheter 500 is then withdrawn through the obstruction while venting through the lumen 738 with the vacuum source 526 to remove emboli. After the catheter 500 has been withdrawn, the solution is delivered through the perfusion catheter 718 and the dissolved obstruction can be withdrawn through the lumen 502 in the catheter 500 using the vacuum source 526. The catheter 500 and perfusion catheter 718 are both coupled to the system of FIGS. 7 or 14 for periodic infusion of the oxygenated medium as necessary. The lumen 738 preferably has a cross-sectional area of no more than 1.54 $mm^2$ and more preferably no more than 0.3 $mm^2$, and most preferably no more than 0.19 $mm^2$ along the distal portion of at least 5 cm. The maximum outer dimension of the catheter along the distal portion is preferably no more than 1.4 mm and more preferably no more than 0.95 mm and most preferably no more than 0.50 mm so that the lumen of the catheter 500 may still be used to suction the dissolved obstruction with the perfusion catheter 718 contained therein.

Although it is preferred to pass the catheters 714, 716, 718 directly through the catheter 500 thereby obviating the need to track over a guidewire, the catheters 714, 716, 718 may also be advanced over a guidewire which is advanced through the vasculature within the lumen 502 of catheter 500. Conventional guidewires are typically 0.014 inch to 0.018 inch in diameter and constructed to be flexible enough to reach the distal regions of the cerebral vasculature described above. After the guidewire has reached the desired location, a catheter can be advanced over the guidewire. At this point in the procedure, the guidewire must be rigid, rather than flexible, so that the catheter tracks over the guidewire without displacing the guidewire itself.

The devices and methods of the present invention permit the use of relatively large guidewires for advancement of catheters through the cerebral vasculature. This system does not require the use of smaller, more flexible guidewires since the guidewire is advanced through the catheter 500 rather than independently. The system promotes significant stability beyond that provided by conventional guidewires. The guidewire and corresponding guidewire lumen size of the catheter 712 are preferably larger than 0.018 inch, at least 0.028 inch or at least 0.035 inch. The catheter 500 may then be removed and the catheter 712 advanced over the large stable guidewire. The catheter 500, or another perfusion catheter described herein, and the catheter 712 and/or guidewire may be packaged together in a kit for practicing the method as shown in FIG. 9.

Referring to FIG. 24, yet another system 740 for treating an obstruction in the cerebral vasculature is shown. The system 740 includes a first catheter 742 which passes through a second catheter 743. The first catheter 742 is coupled to the system of FIGS. 7 or 14 for infusion of fluids in the manner described above. The second catheter 743 is coupled to a source of inflation fluid 744 for inflating a balloon 745. The system 740 is similar to the systems described above in that the first catheter 742 infuses the oxygenated medium while the balloon 745 displaces the obstruction. The first and second catheters 742, 743 are both tapered with the first catheter 742 positioned within the second catheter 743 with a close tolerance fit to reduce the overall size of the system. The catheters 742, 743 preferably have dimensions of the tapered catheters described above. Referring to FIGS. 24 and 25, the first catheter 742 may have a coiled tip 748 similar to a guidewire or may have a tubular shape similar to a catheter. Referring to FIGS. 26 and 27, the first catheter 742 has a lumen 749 which is coupled to the system of FIGS. 7 or 14. An inflation lumen 744 may have a smaller cross-sectional size (FIG. 26) in a deflated position state relative to an inflated state (FIG. 27).

Another preferred method of the invention is now described with reference to FIG. 24. The second catheter 743 is advanced over a conventional guidewire (not shown) to a position within or near the obstruction. The guidewire is then removed and the first catheter 742 is introduced through the second catheter 743. The first catheter 742 is then advanced through the obstruction together with the second catheter 743 or by itself. Oxygenated medium is then delivered in the manner described above. After infusing the oxygenated medium for the desired time at the desired rates and pressures, the balloon 745 on the second catheter 743 is inflated to displace the obstruction. The balloon 745 may also be used to isolate the ischemic region from normal arterial flow.

Referring to FIGS. 28–30, an alternative second catheter 743A is shown which may be used in the same manner as second catheter 743 of FIGS. 24–27. The second catheter 743A has an expandable sidewall 760 which is folded or wrapped in a collapsed position and advanced over a guidewire 761 as shown in FIG. 29. The sidewall 760 provides a small profile when advanced through the vasculature and a large capacity for use in delivering fluids or other catheters as described above. The sidewall 760 preferably reduces the maximum outer dimension of the catheter along a portion by at least 25% while retaining the overall dimensions of the catheter 500 when in the expanded configuration. An inflation lumen 752 is coupled to the balloon 745 for inflating the balloon 745. The sidewall 760 may be made of any suitable material and is preferably a thermoplastic material having a wall thickness of no more than 0.38 mm and preferably no more than 0.25 mm. The sidewall 760 may be used with any of the other catheters described herein and is particularly advantageous for the catheters 10, 400, 500, 600. The sidewall 760 may take other forms without departing from the scope of the invention.

The second catheter 743A is advanced over the guidewire 761 with the sidewall 760 in the collapsed condition. When the balloon 745 is positioned proximate to the obstruction, the first catheter 742 is advanced through the catheter 743A. The sidewall 760 is expanded by the first catheter 742 to the expanded position of FIG. 24. The sheath 760 may also be

expanded by an obturator or the like before introduction of the catheter **742**. The first and second catheters **742**, **743**A may be then used in any manner described above.

While the above is a complete description of the preferred embodiments of the invention, various alternatives, modifications, and equivalents may be used. Therefore, the above description should not be taken as limiting the scope of the invention which is defined by the appended claims.

What is claimed is:

**1**. A method of delivering an oxygenated medium to an ischemic vascular region, comprising the steps of:

providing a catheter having a lumen;

coupling the lumen of the catheter to a source of an oxygenated medium;

advancing the catheter through a patient's vasculature to a narrowed region of a blood vessel, wherein an ischemic bed is located downstream from the narrowed region;

passing a distal end of the catheter through the narrowed region of the blood vessel; and

infusing the oxygenated medium into the ischemic bed through the lumen of the catheter, the oxygenated medium being infused at a pressure below arterial pressure at a location upstream of the narrowed region, the infusing step being carried out for a period of time.

**2**. The method of claim **1**, wherein:

the infusing step is carried out by increasing pressure over the period of time.

**3**. The method of claim **2**, wherein:

the infusing step is carried out with by increasing the pressure linearly.

**4**. The method of claim **2**, wherein:

the infusing step is carried out by increasing the pressure non-linearly.

**5**. The method of claim **1**, wherein:

the infusing step is carried out for at least 2 hours.

**6**. The method of claim **1**, wherein:

the infusing step is carried out for at least 4 hours.

**7**. The method of claim **1**, wherein:

the infusing step is carried out for at least 48 hours.

**8**. The method of claim **1**, wherein:

the infusing step is carried out for at least 30 minutes.

**9**. The method of claim **1**, wherein:

the infusing step is carried out for 2–3 days.

**10**. The method of claim **1**, wherein:

the infusing step is initially carried out at a start pressure of below 200 mmHg.

**11**. The method of claim **1**, wherein:

the infusing step is initially carried out at a start pressure of below 150 mmHg.

**12**. The method of claim **1**, wherein:

the infusing step is initially carried out at a start pressure of below 100 mmHg.

**13**. The method of claim **1**, wherein:

the infusing steps is initially carried out at a start pressure of 10 mmHg to 70 mmHg.

**14**. The method of claim **1**, wherein:

the infusing step is carried out by selecting a flow rate which is less than 30 cc/min.

**15**. The method of claim **1**, wherein:

the infusing step is carried out by selecting a flow rate which is less than 10 cc/min.

**16**. The method of claim **1**, further comprising the step of:

measuring pressure with the lumen in the catheter; and

changing the flow rate during the infusing step as a result of the pressure measured during the measuring step.

**17**. The method of claim **1**, wherein:

the providing step is carried out with the lumen having cross-sectional size of 0.77 to 7.1 mm squared along a distal portion of the lumen, the distal portion having a length of at least 5 cm, the proximal portion of the lumen having a larger cross-sectional size than the distal portion of the lumen.

**18**. The method of claim **1**, wherein:

the providing step is carried out with the lumen having cross-sectional size of 1.7 to 2.9 mm squared along the distal portion.

**19**. The method of claim **18**, wherein:

the providing step is carried out with the distal portion having a length of at least 10 cm.

**20**. The method of claim **18**, wherein:

the providing step is carried out with the distal portion having a length of at least 15 cm.

**21**. A method of delivering an oxygenated medium to an ischemic vascular region, comprising the steps of:

providing a catheter having a lumen;

coupling the lumen of the catheter to a source of an oxygenated medium;

advancing the catheter through a patient's vasculature to a narrowed region of a blood vessel, wherein an ischemic bed is located downstream from the narrowed region;

passing a distal end of the catheter through the narrowed region of the blood vessel; and

infusing the oxygenated medium into the ischemic bed through the lumen of the catheter, the oxygenated medium being increasing to a target pressure over a period of time.

**22**. The method of claim **21**, wherein:

the infusing step is carried out with the period of time being one minute.

**23**. The method of claim **21**, wherein:

the infusing step is carried out with the period of time being 30 minutes to 9 hours.

**24**. The method of claim **21**, wherein:

the infusing step is initially carried out at a start pressure of below 200 mmHg.

**25**. The method of claim **21**, wherein:

the infusing step is initially carried out at a start pressure of below 150 mmHg.

**26**. The method of claim **21**, wherein:

the infusing step is initially carried out at a start pressure of below 100 mmHg.

**27**. The method of claim **21**, wherein:

the infusing steps is initially carried out at a start pressure of 10 mmHg to 70 mmHg.

**28**. The method of claim **21**, wherein:

the infusing step is carried out by selecting a flow rate which is less than 30 cc/min.

**29**. The method of claim **21**, wherein:

the infusing step is carried out by selecting a flow rate which is less than 10 cc/min.

**30**. The method of claim **21**, further comprising the step of:

measuring pressure with the lumen in the catheter; and

changing the flow rate during the infusing step as a result of the pressure measured during the measuring step.

**31**. The method of claim **21**, wherein:

the providing step is carried out with the lumen having cross-sectional size of 0.77 to 7.1 mm squared along a distal portion of the lumen, the distal portion having a length of at least 5 cm, the proximal portion of the lumen having a larger cross-sectional size than the distal portion of the lumen.

**32**. The method of claim **31**, wherein:

the providing step is carried out with the lumen having cross-sectional size of 1.7 to 2.9 mm squared along the distal portion.

**33**. The method of claim **31**, wherein:

the providing step is carried out with the distal portion having a length of at least 10 cm.

**34**. The method of claim **31**, wherein:

the providing step is carried out with the distal portion having a length of at least 15 cm.

* * * * *