UNITED STATES PATENT AND TRADEMARK OFFICE

BEFORE THE PATENT TRIAL AND APPEAL BOARD

LEDUP MANUFACTURING GROUP LTD.,
Petitioner,

v.

SEASONAL SPECIALTIES, LLC,
Patent Owner.

Case IPR2024-01258
U.S. Patent No. 11,096,252

DECLARATION OF TED K. HIGMAN, Ph.D.

TABLE OF CONTENTS

I. Introduction 1

II. Summary of Opinions 1

III. Qualifications and Experience 3

A. Education and Experience 3

B. Compensation 4

C. Documents and Other Materials Considered 4

D. Prior Testimony and Publications 4

IV. Statement of Legal Principles 4

A. Claim Construction 4

B. Anticipation 5

C. Obviousness 6

V. Scope of Opinions 6

VI. The Challenged Claims 7

VII. Overview of the '252 Patent 7

A. Background of the Invention 7

B. The '252 Resistive Bypass Patent 8

C. Persons of Ordinary Skill in the Art 11

VIII. Prior Art Relied on in Petition 12

A. Inoue (EX1003) 12

B. Holler (EX1004) 13

C. Smith (EX1007) 14

D. Fisherman (EX1008) 14

E. Callahan (EX1009) 15

F. Yu (EX1010) 16

IX. Opinions Regarding the Grounds in the Petition 16

A. Ground 1: Inoue does not anticipate claim 1 16

B. Ground 2: Inoue combined with Holler does not render claims 1 or 10 obvious 18

C. Ground 3: Holler combined with Smith does not render claims 1, 10, or 11 obvious 22

D. Ground 4: Fisherman combined with Callahan does not render claims 1, 5, 6, 7, or 9 obvious 25

E. Ground 5: Inoue combined with Smith does not render claims 2, 3, 4, 5, 6, 8, or 9 obvious 27

F. Ground 6: Holler combined with Callahan does not render claims 10, 11, 12, 13 or 14 obvious 28

G. Ground 7: Yu 30

I, Ted K. Higman, Ph.D., hereby declare as follows:

I. INTRODUCTION

1. I have been retained by Seasonal Specialties, LLC, the owner of U.S. Patent No. 11,096,252 ("'252 patent"), whom I will refer to in this declaration as "Seasonal," to provide my independent expert opinions in this matter. I understand that a petition for inter partes review has been filed against certain claims of the '252 patent. More specifically, I have been asked to consider and provide rebuttal opinion to the opinions of Petitioner's expert, E. Fred Schubert, Ph.D. (EX1013) and the Grounds for Cancellation set forth in the Petition. The following provides my preliminary opinions regarding the Grounds for Cancellation and made in support of Seasonal's Preliminary Response to the Petition.

II. SUMMARY OF OPINIONS

2. Ground 1: Inoue does not anticipate claim 1. Inoue fails to disclose a "resistor bypass circuit" as claimed in the '252 patent.

3. Ground 2: Inoue combined with Holler does not render claims 1 or 10 obvious. A person of ordinary skill in the art (POSITA) would not have been motivated to combine Inoue's LED light with Holler's circuit configuration for incandescent lights.

4. Ground 3: Holler combined with Smith does not render claims 1, 10, or 11 obvious. A POSITA would not have been motivated to combine Smith's LED light with Holler's circuit configuration for incandescent lights.

5. Ground 4: Fisherman combined with Callahan does not render claims 1, 5, 6, 7, or 9 obvious. A POSITA would not have been motivated to use the circuit in Fisherman for incandescent lights with the LED light disclosed in Callahan.

6. Ground 5: Inoue combined with Smith does not render claims 2, 3, 4, 5, 6, 8, or 9 obvious. Inoue fails to disclose a "resistor bypass circuit" as required by claims 1 and 9, and on which claims 2, 3, 4, 5, 6, 7, and 8 each depend.

7. Ground 6: Holler combined with Callahan does not render claims 1, 2, 4, 8, 10, 11, 12, 13 or 14 obvious. A POSITA would not have been motivated to combine Callahan's LED light with Holler's circuit configuration for incandescent lights.

8. Ground 7: I have not considered or formed an opinion regarding Ground 7 in the Petition, but reserve the right to do so, if necessary, at a later date in the proceedings.

III. QUALIFICATIONS AND EXPERIENCE

A. Education and Experience

9. I summarize my educational background and career history in the following paragraphs. My complete qualifications are provided in my curriculum vitae, which is attached to this declaration as Appendix A.

10. I received a Bachelor of Science degree in Electrical Engineering in 1981 from Purdue University, W. Lafayette, Indiana. I received a Master of Science degree in Electrical Engineering from Purdue University, W. Lafayette, IN in 1982. I received a Ph.D. in Electrical Engineering from the University of Illinois, Champaign-Urbana, IL in 1989.

11. While studying at the University of Illinois I was a member of the James J. Coleman Device Research Group and worked with the fabrication and testing of semiconductor light emitting diodes, semiconductor lasers, and electron devices.

12. I am an Associate Professor, Department of Electrical and Computer Engineering at the University of Minnesota.

13. In writing this declaration, I have considered my own knowledge and experience, including my work experience in the field of electrical engineering.

14. I have also considered the information that a POSITA would have been aware of at the time of the patent filing, including the documents I discuss in this declaration.

B. Compensation

15. I am being compensated at $250 per hour for my time. My compensation is not contingent on the results of these or any other legal proceedings.

C. Documents and Other Materials Considered

16. I have considered the documents referred to in this Declaration in forming my opinions.

D. Prior Testimony and Publications

17. Attached to my curriculum vitae (Appendix A) is a list of publications I have authored or co-authored.

IV. STATEMENT OF LEGAL PRINCIPLES

18. I am not an attorney and I have not independently researched the law on patentability. I have been informed by counsel of the legal standards below.

A. Claim Construction

19. I understand that patent claims are to be interpreted in view of a patent's specification and prosecution history. I understand that claim construction starts with the plain language of the claims as understood by a person having ordinary skill in the art at the time the patent was filed.

20. I understand that a patent may be its own lexicographer, so long as the definition of a specific term is clearly set for the specification and it is clear the inventor intended to define the term.

21. For any claim terms not explicitly noted as construed, I have applied the plain and ordinary meanings as would be understood by a person of ordinary skill in the art in 2006.

B. Anticipation

22. I understand that a claim is invalid as anticipated if a single prior art reference discloses each and every limitation of the claimed invention.

23. I understand that a reference may be anticipatory regardless of whether the prior art and the claimed invention are directed to achieving the same purpose, if it contains the claim elements in the same order as claimed and would inherently provide any claimed function.

24. I understand that a prior art reference may anticipate a claim without expressly disclosing a feature of the claimed invention if that missing feature is necessarily present, or inherent, in the single anticipating reference.

25. I understand that inherency requires more than a probability or possibility that a claimed feature is present in the prior art, but rather that the feature or characteristic is a necessary part of the prior art. I also understand that a POSITA does not necessarily need to recognize the inherency at the time of purported invention.

C. Obviousness

26. I understand that obviousness is determined based on (1) the scope and content of the prior art; (2) the differences between the claims and the prior art; (3) the level of ordinary skill in the art; and (4) objective indicia of nonobviousness.

27. I understand that there must be a reason to modify a single prior art reference, or to combine multiple references, to achieve the claimed invention. I understand that this motivation may come from a teaching, suggestion, or motivation to combine. I also understand that a specific teaching, suggestion, or motivation is not required.

28. I understand that after consideration of all of these factors, a patent is not obvious unless the difference between the subject matter sought to be patented and the prior art are such that the subject matter as a whole would have been obvious at the time the invention was made to a person having ordinary skill in the art to which said subject matter pertains.

V. SCOPE OF OPINIONS

29. I have been asked only to provide my independent opinions and analysis of the issues I specifically discuss in this Declaration. I note that the Petition (and the evidence it cites) raises other issues. However, I have not been asked to provide my opinion as to any other issues than those identified in this Declaration.

VI. THE CHALLENGED CLAIMS

30. The table below identifies the Grounds in the Petition.

	Grounds	Reference(s)	Challenged Claims
1.	§ 102	Inoue	1
2.	§ 103	Inoue in view of Holler	1, 10
3.	§ 103	Holler in view of Smith	1, 10, 11
4.	§ 103	Fisherman in view of Callahan	1, 5, 6, 7, 9
5	§ 103	Inoue in view of Smith	2, 3, 4, 5, 6, 8, 9
6	§ 103	Holler in view of Callahan	10, 11, 12, 13, 14
7	§ 103	Yu	1, 2, 10

Pet. at 24.

VII. OVERVIEW OF THE '252 PATENT

A. Background of the Invention

31. Decorative lighting products are often connected in "series" in a string of lights, whereby electrical current flows from one light to the next in the circuit, end-to-end. A drawback to series connected decorative lighting strings is that when a lighting source, e.g., a bulb, is removed from the circuit, is burnt out, defective, broken, is missing/removed, or has a loose connection, the entire lighting circuit is rendered inoperable. EX1001 at 1:26-45.

32. To address this drawback, lighting string manufacturers utilize circuit bypasses to permit electrical current to continue to flow through the circuit even though after one or more bulbs in the lighting string have become inoperable. For example, U.S. Patent No. 5,886,423 to Gershon discloses a lighting string containing incandescent bulbs with a parallel solid state bypass circuit that conducts electricity only when the bulb becomes inoperable. When one or more bulbs in the Gershon system become inoperable, the bypass then permits current to bypass the inoperable lamp and flow to the remaining bulbs.

33. Drawbacks remain, however, with circuit bypasses. The solid state bypass circuit in Gershon creates no voltage load on the circuit, until engaged when a bulb in the circuit fails. When engaged, the bypass circuits like those described in Gershon provide insufficient resistance to that portion of the circuit bypassed. If enough bulbs fail, the circuit current will increase causing early failure of the remaining bulbs as too much current flows through the remaining bulbs, overheating them and causing them to prematurely fail.

B. The ’252 Resistive Bypass Patent

34. The ’252 patent discloses an improved light circuit for series circuits disclosing a resistive bypass element that will continue to conduct electricity and keep the remainder of the series circuit of lights lit even when one or more individual

lighting elements are burnt out, defective, broken, removed/missing, have a loose connection or a broken connection. EX1001, Technical Field of Invention.

35. FIG. 2 of the '252 patent illustrates an embodiment of the invention that uses LEDs as a light source. EX1001 at 5:66-6:13. A power source 12 provides power to bypass circuit 20.

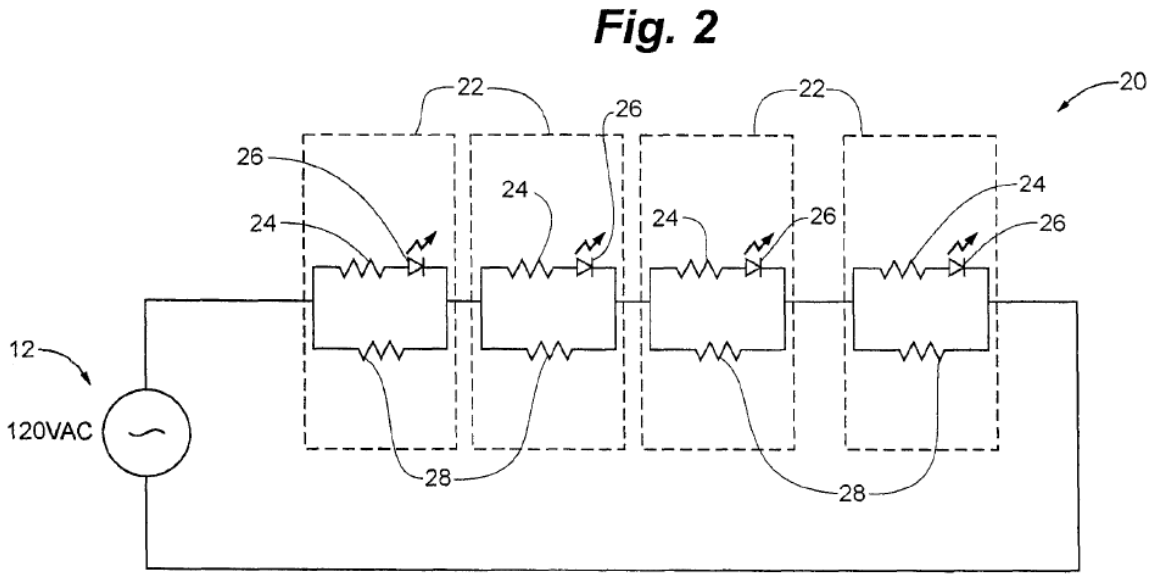

EX1001 at Figure 2.

36. When all light sources 26 are operable, current flows through the circuit, with a portion of the total current flows through the path containing current limiting resistor 24 and light source 26, while the remainder flows through bypass resistor 28. EX1001 at 6:14-19. When current flow is interrupted through a light source 26, total current flows through the corresponding bypass resistor 28, allowing the remaining light sources 26 to operate. *Id.* at 6:19-22.

37. The ’252 patent contains three independent claims: 1, 9 and 10. Illustrative independent claim 1 recites:

> 1. A resistor bypass circuit for a series lighting circuit comprising a plurality of serially connected LED light sources and a bypass resistor being connected in parallel with at least one of the respective light sources, said bypass resistor being in circuit and conducting current at all times when current is flowing through the circuit regardless of whether the LED light sources are conducting current therethrough and wherein said bypass resistor is capable operating on a one hundred percent duty cycle.

EX1001 at 13:52-59.

38. Claims 2, 3, 4, 5, 6, 7, and 8 depend from claim 1. EX1001 at 13:51-63. Claim 2 adds the requirement that the resistor bypass circuit of claim 1 is “series-parallel connected.” *Id.* at 13:61-62. Claims 3 and 5 add the requirement that the light source provides a “twinkling effect.” *Id.* at 13:63-14:3, 14:6-8. Claim 4 limits power usage of the LED to “0.20 watts or less.” *Id.* at 14:3-5. Claim 6 requires a “light source utilizing . . . circuits that control the flashing rate of the light source”. *Id.* at 14:8-13. Claim 8 specifies power source of the circuit, e.g., batteries, or step down transformers. *Id.* at 14:20-25.

39. Claims 11, 12, 13, and 14 depend from claim 10. EX1001 at 14:48-63. Claim 11 adds the requirement that the light source provide "color changing characteristics." *Id.* at 14:48-49. Claim 12 adds the requirement that the light sources "utilize[e] LED packages that incorporate two or more LED chips". *Id.* at 14:50-54. Claim 13 adds the requirement that integrated circuit used in the circuit provide for mixing of LED colors. *Id.* at 14:55-59. Claim 14 adds the requirement that the integrated circuit providing control only affect individual lighting elements. *Id.* at 14: 59-63.

C. Persons of Ordinary Skill in the Art

40. I understand that the Petitioner and Dr. Schubert have proposed a definition of a person of ordinary skill as having: "*a bachelor's degree in electrical engineering, physics, materials science, or a related discipline, and four years of practical experience in designing or fabricating LED lighting systems, including controlling and driving LEDs. Alternatively, a POSITA would have had a master's degree and three years of experience, or a Ph.D. degree and two years of experience.*" EX1013 at 32 ¶ 2. While I do not necessarily agree with this proposed definition, my opinions below are provided with respect to this definition of a POSITA.

41. I have a doctorate degree in electrical engineering and four years of practical experience in designing or fabricating LED lighting systems. Therefore, I meet the definition, provided by the Petitioner and Dr. Schubert, of a POSITA.

VIII. PRIOR ART RELIED ON IN PETITION

A. Inoue (EX1003)

42. Inoue discloses "a lighting device and a lighting system that allows a plurality of light sources to light up at different luminance levels from each other." EX1003 ¶ [0002].

FIG. 3

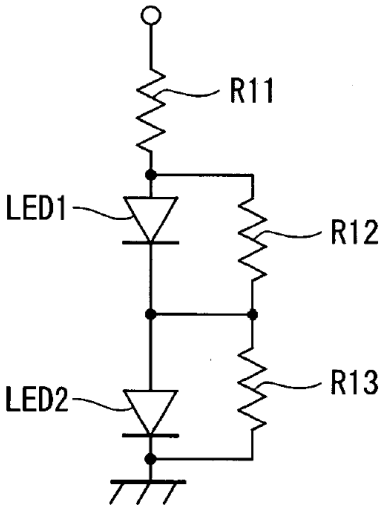

43. Inoue does not disclose a resistive bypass element that will continue to conduct electricity and keep the remainder of the series circuit of lights lit even when one or more individual lighting elements are burnt out, defective, broken, missing/removed, have a loose connection or a broken connection. Inoue teaches a

circuit configuration that allows the luminance levels of each LED to vary in accordance with a change in a voltage value without using a constant-voltage circuit, simplifying the circuit configuration. EX1003 at [0005].

44. In the lighting circuit shown in Fig. 3 in Inoue, "the resistance valued of the resistors R12 and R13 are set such that luminance levels under the rated voltage become desired luminance levels, so that each of the LEDs 1 and 2 lights up at a predetermined luminance level". EX1003 at [0034]. The shunt sections containing R12 and R13 connected in parallel with the LEDs in Fig. 3 adjust luminance levels of the LEDs. The bypass containing resistors R12 and R13 do not permit LED1 or LED2 to remain lit if either lighting element burns out, breaks, or has a loose or a broken connection.

B. Holler (EX1004)

45. Holler discloses a plurality of incandescent lamps 5 connected in series; it does not disclose use of LED lights. EX1004 at 1:42-43 and Figures 4-5.

46. Holler discloses resistance shunts 6 (see Fig. 2) with resistance at least equal to lamps 5 and approximately twice the current carrying capacity. EX1004 at 2:96-102.

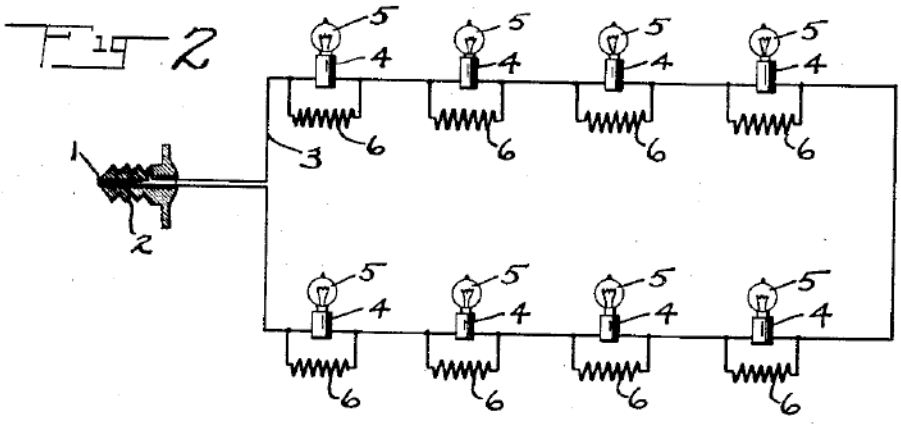

47. Holler issued as a patent in 1922. Holler predates any use of LEDs and does not provide any disclosures specific to LEDs.

C. Smith (EX1007)

48. Smith discloses light-emitting diode (LED) string lights connected in series. EX1007 at Abstract. Smith describes the "shortcomings" of incandescent light bulbs, including "relatively short life due to frequent, burnout, breakage, and the like," among other issues. EX1007 at 1:20-33. Smith, however, does not suggest that the LED light strings would benefit from use with a bypass resistor, to keep the string lit one of the LEDs becomes burned out, broken or otherwise inoperable.

D. Fisherman (EX1008)

49. Fisherman is discussed in the specification of the Resistive Bypass Patents and of record during examiner. EX1001 at 1:46-64; see also References Cited. Fisherman discloses a series circuit for a light set with individual incandescent bulbs. See Fisherman 2:9-17 describing lighting filament 11 and lamp 10.

50. Fisherman discloses that the lighting filament 11 of lamp 10 is shunted by resistance 13. See Fisherman 1:39-40, 2:9-20. Fisherman also discloses that the "resistance 13 are so dimensioned that when the system functions normally, the electrical current will flow through the filaments 11 of the lamps 10, so that all the lamps 10 will be illuminated." Id. 2:18-21. Therefore, Fisherman discloses that the resistance 13 is largely non-conducting current, until the bimetallic strip 12 overheats and moves away from the filament. Id. 2:23-32. The lamp then ceases to be illuminated, the electrical current is diverted to the shunt 13, but all the remaining lamps continue to be illuminated. Id.

E. Callahan (EX1009)

51. Callahan discloses a decorative lighting system that uses Pulse Width Modulation (PWM), controlled by an integrated circuit, to create blink rates undetectable to the human eye, to control brightness and otherwise vary the lighting display. EX1009 at 4:17-22, 4:29-35, 4:41-45. Callahan discloses use of an integrated circuit to create PWM waveforms and "prescaler registers 36, 38 that combine to permit blink rates of the LEDs to be selected. The prescalers 36, 38 generate the period the PWM signal from a high frequency oscillator." *Id.* at 4:17-20. Callahan discloses that brightness is also controlled by brightness registers generating a high frequency PWM signal. Id. 4:41-45.

F. Yu (EX1010)

52. I have not considered the Petition's arguments for cancelation based on Yu, although I reserve the right to do so at a later time, to the full extent allowable by the Board's procedural rules.

IX. OPINIONS REGARDING THE GROUNDS IN THE PETITION

53. I do not believe the Grounds set forth in the Petition, and the evidence cited within, have shown that the Challenged Claims are unpatentable. The reasons and bases for my opinions are provided in the following paragraphs.

A. Ground 1: Inoue does not anticipate claim 1

54. Dr. Schubert contends that Inoue discloses every limitation, and, therefore, anticipates claim 1 of the '252 patent. EX1013 at 47-56. Dr. Schubert identifies the bypass resistor R13 in Fig. 3 of Inoue as satisfying claim 1's requirement of a "*resistor bypass circuit for a series lighting circuit.*" EX1013 at 48-49. I disagree. In my opinion, Inoue fails to disclose a "resistor bypass circuit" as claimed in the '252 patent.

55. Inoue discloses a lighting device and lighting systems that "allows a plurality of light sources to light up at different levels." EX1003 at [0002]. Inoue discloses a circuit configuration that "allows luminance levels of each of LEDs to vary in accordance with a change in a voltage value without using a constant-voltage circuit". EX1003 at [0005].

56. Claim 1 of the ’252 patent recites a “resistor bypass circuit for a series lighting circuit comprising … conducting current at all times when current is flowing through the circuit regardless of whether the LED light sources are conducting current therethrough”. EX1001 at 13:52-60. The additional claim language, requiring that the bypass conduct current at all times “regardless of whether the LED light sources are conducting current therethrough,” makes clear that the claimed bypass continues to conduct electricity, and keeps the remaining lights lit, even when one more individual lighting elements in the series are burned out. EX1001, Technical Field of Invention.

57. Inoue’s bypass is not a resistor bypass that continues to conduct electricity and remaining lights lit, even when one more individual lighting elements in the series are burned out. Inoue’s circuit configuration shown in Fig. 3 and other figures in the patent’s specification has the LEDs always carrying current when the circuit is powered.

58. Inoue discloses “shunt sections that are connected in parallel to at least one of the serial circuits and shunts current when a voltage higher than rated voltages of the light sources is applied” to the circuit. EX1003 at [0011]. The luminance level of the LEDs vary in accordance with a change in a voltage value. EX1003 at [0005].

59. Inoue does not disclose that LED2 in Figure 3 will remain lit if LED1 burns out or stops carrying current, and that all current will flow through the bypass

containing R12. Inoue teaches how to use R12 and R13 to change the luminance in response to an increased or decreased the power voltage level. EX1003 at [0034].

60. The figure on page 53 of Dr. Schubert's declaration, showing Figure 3 of Inoue with an "open circuit" is an annotation of Figure 3, in which Dr. Schubert drew the circuit open. Nowhere in the specification or drawings does Inoue suggest or encourage use of the circuit configuration as suitable as bypass if the light source LED1 or LED2 has failed (burned out). EX1013 at 54 ¶ 4.

B. Ground 2: Inoue combined with Holler does not render claims 1 or 10 obvious

61. Dr. Schubert contends a POSITA would have been motivated to use the drive circuit in Holler with the LED light sources of Inoue. EX1013 at 60 ¶ 2. Dr. Schubert contends that "Inoue teaches that LEDs and incandescent bulbs are equally suitable for us in lighting strings, and, given the similar drive voltages for both types of light sources (about 3.0 V), are in fact interchangeable." EX1013 at 57. Dr. Schubert contend that in 2006 a POSITA would have been motivated to replace the incandescent light source of Holler with the LED light source taught by Inoue. *Id.*

62. In my opinion, a POSITA would not have been motivated to use the bypass circuit in Holler with the LED light disclosed in Inoue. LEDs have a very different current vs. voltage characteristic than incandescent bulbs. LED lights do not have resistance like an incandescent bulb. LED lights have an exponential

current vs. voltage relationship (described by the Shockley diode equation) rather than a linear current vs. voltage relationship such as is found in a simple resistance. A POSITA who considered using a resistor bypass would quickly come to the conclusion that the design procedure in Holler is not useful.

63. Moreover, decorative incandescent light strings continue to sell to this day because of their illumination appearance. A POSITA would not be motivated to replace an incandescent light bulb with and LED as incandescent light sources still have a place in decorative lighting, compared to other industries, both lighting and non-lighting. This is true today and would have been true even more so at the time of effective filing date for the ’252 patent. For example, commercial lighting is almost all LED, same with automotive lighting. Much of this is due to the comforting effects of incandescent lights to those familiar to them verses some of the harsh or vibrant lighting LEDs can produce.

64. A POSITA would not have a reasonable expectation that use of the shunt in Holler’s circuit would be successful for use with the LED disclosed in Inoue, due to the very different current vs. voltage characteristic between LEDs and incandescent bulbs. LEDs have a non-linear current-voltage relationship and are sensitive to small changes in voltage. The circuit design in Inoue includes Zener diodes in which each Zener diode has a breakdown voltage that is equivalent or

slightly greater than each of the rated voltage of each LED. EX1003 at [0025]. The Zener diodes serve to handle the sensitivity of LEDS from voltage variations.

65. In contrast, incandescent bulbs have a linear resistive relationship between voltage and current under steady-state conditions (i.e., their resistance changes predictably with temperature which stabilizes in milliseconds as the filament heats up when the incandescent bulb is first turned on). Because of this, the bypass circuit in Holler does not need components for precise current control such as Zener diodes because the bulbs can tolerate and moderate voltage variations themselves. EX1004 at FIG. 3

66. Dr. Schubert mentions Holler's disclosure of bypass resistance equal to the resistance of the lamp. EX1013 at 58, citing Holler 1:96-101. However, the word resistance is not useful when describing LEDs as opposed to incandescent bulbs. LED lights have an exponential current vs. voltage relationship (described by the Shockley diode equation) rather than a linear current vs. voltage relationship as found in a simple resistance.

67. As previously discussed, incandescent bulbs possess inherent resistance, which increases with temperature and stabilizes in milliseconds as the filament heats up when the incandescent bulb is first turned on. This property helps self-regulate the current through the bulb. LEDs, however, do not exhibit self-regulating resistance. Without a proper current-regulating mechanism, the bypass

resistances in Holler's circuit would fail to prevent current surges, resulting in possible LED damage. The bypass circuit in Holler does not include Zener diodes as it relies on the resistances in parallel with incandescent bulbs, which are linear resistive elements and can tolerate larger voltage variations without damage. EX1004 at 1:96–101. In other words, Holler's bypass circuit uses resistors without the precise current regulation needed for LEDs, making it unsuitable for LED operation.

68. The shunt in the bypass circuit of Holler's is designed for incandescent bulbs with their linear resistance and higher voltage tolerances. Applying this shunt to LEDs, like those in Inoue, would likely result in overcurrent damage to the LEDs without current-limiting components.

69. This would have made the design a much more involved mathematical exercise than the simple one suggested by Holler where he suggests matching the bypass resistor to the resistance of the light source. Dr. Schubert's assertion that Holler's teachings can be applied in a predictable manner to Inoue's bypass resistors (page 58, first paragraph of Dr. Schubert's declaration) is a gross oversimplification of the design process.

C. Ground 3: Holler combined with Smith does not render claims 1, 10, or 11 obvious

70. Dr. Schubert contends a POSITA would have been motivated to use the drive circuit in Holler with the LED light sources of Smith. EX1013 at 69-71 ¶ 5. Dr. Schubert contends a POSITA "would be motivated to replace the obsolete … incandescent light sources with modern . . . LED light sources." EX1013 at 71 ¶ 5. Dr. Schubert further contends that "the incandescent light sources of Holler can be easily replaced by the LED light sources of Smith, and a POSA would be motivated to implement such a replacement". *Id.* ¶ 6.

71. In my opinion, a POSITA would not have been motivated to use the bypass circuit in Holler with the LED light disclosed in Smith. LEDs have a very different current vs. voltage characteristic than incandescent bulbs. LED lights do not have resistance like an incandescent bulb. LED lights have an exponential current vs. voltage relationship (described by the Shockley diode equation) rather than a linear current vs. voltage relationship as found in a simple resistance. This is not to be confused with the terms "small signal resistance" or "dynamic resistance" which do not apply here.

72. Moreover, as discussed above, decorative incandescent light strings continue to sell to this day because of their illumination appearance. A POSITA would not be motivated to replace an incandescent light bulb with an LED as

incandescent light sources still have a place in decorative lighting, compared to other industries, both lighting and non-lighting. This is true today and would have been true even more so at the time of effective filing date for the ’252 patent.

73. As previously discussed, incandescent bulbs possess inherent resistance, which increases with temperature and stabilizes in milliseconds as the filament heats up when the incandescent bulb is first turned on. This property helps self-regulate the current through the bulb. LEDs, like the ones used in Smith, have non-linear current-voltage relationship such that small voltage increases can lead to disproportionately large current surges, which LEDs are unable to handle without appropriate current regulation.

74. The LEDs in Smith “generate very little heat” due to its low energy consumption while presenting no dangers of fire. EX1007 at 240–42. Although the LEDs in Smith generate minimal heat, LEDs that generate minimal heat are prone to overcurrent, and the bypass circuit in Holler lacks current-limiting features as it primarily relies on the thermal resistance of incandescent bulbs.

75. A POSITA would not have a reasonable expectation that use of the shunt in Holler’s circuit would be successful for use with the LED disclosed in Smith.

76. Dr. Schubert mentions Holler’s disclosure of bypass resistance approximately twice the current carrying capacity to that of the lamp. EX1013 at 79

¶ 3, citing Holler 1:97-101. However, resistance is very different in LEDs than incandescent bulbs.

77. The bypass circuit in Holler is designed for incandescent bulbs operating at voltages around 15 V per bulb. EX1004 at 1:85-87. A typical forward voltage of an LED ranges from 1.2 to 3.6 V. The bypass resistors in Holler would reasonably fail to protect the LED but also create a mismatch in voltage distribution across the bypass circuit.

78. Additionally, a bypass resistor carrying twice the current of an LED would result in significant overcurrent flowing through the LED during normal operation or a failure. LEDs, with their non-linear behavior and sensitivity to overcurrent, would not function safely in Holler's circuit without additional current-limiting components.

79. Holler is likely taking a normal precautionary step of over building a component in order to safeguard against failure. There is nothing material about twice the current carrying capacity. The increased current carrying capacity would not alleviate any of current and voltage characteristic differences between LEDs and incandescent bulbs.

D. Ground 4: Fisherman combined with Callahan does not render claims 1, 5, 6, 7, or 9 obvious

80. Dr. Schubert contends a POSITA would not have been motivated to use the lighting circuit in Fisherman with the LED light sources of Callahan. EX1013 at 87 ¶ 3. Dr. Schubert contends "the combination would be a predictable combination of elements disclosed in the prior art." EX1013 at 87 ¶ 4. Dr. Schubert further contends that a "POSA would be motivated to take advantage of Callahan's LED light sources when implementing the Fisherman lighting circuit." *Id.*

81. In my opinion, a POSITA would have been motivated to use the circuit in Fisherman with the LED light disclosed in Callahan. The lighting circuit in Fisherman relies on features, such as bi-metallic strips, specifically designed to accommodate the linear and self-regulating resistance properties of incandescent bulbs. EX1008 at 1:36–44. In contrast, LEDs, like the ones disclosed in Callahan, require precise current regulation and do not exhibit inherent resistance present in the incandescent bulbs used with the lighting circuit in Fisherman, making substitution impractical without significant redesign of the circuit. EX1009 at [0025]. Again, LEDs have a very different current vs. voltage characteristic than incandescent bulbs. LED lights do not have resistance like an incandescent bulb. LED lights have an exponential current vs. voltage relationship (described by the

Shockley diode equation) rather than a linear current vs. voltage relationship as found in a simple resistance.

82. Moreover, as discussed above, decorative incandescent light strings continue to sell to this day because of their illumination appearance. A POSITA would not be motivated to replace an incandescent light bulb with an LED as incandescent light sources still have a place in decorative lighting, compared to other industries, both lighting and non-lighting.

83. A POSITA would not have a reasonable expectation that use of the shunt in Fisherman's circuit would be successful for use with the LED disclosed in Callahan.

84. Resistance is very different in LEDs than incandescent bulbs. As I have mentioned above, LED lights have an exponential current vs. voltage relationship (described by the Shockley diode equation) rather than a linear current vs. voltage relationship as found in a simple resistance.

85. Fisherman's shunt is designed for incandescent bulbs, relying on their linear resistance and thermal regulation to handle current. EX1008 at 2:22-29. As previously discussed, LEDs require current regulation and lack the thermal-driven resistance increase seen in incandescent bulbs, making Fisherman's shunt unsuitable for protecting LEDs from overcurrent. EX1009 at [0025].

E. Ground 5: Inoue combined with Smith does not render claims 2, 3, 4, 5, 6, 8, or 9 obvious

86. Claims 2, 3, 4, 5, 6, 7, and 8 depend from claim 1. EX1001 at 13:51-63. Dr. Schubert contends it would have been obvious to a POSITA to combine the circuit configuration disclosed in Inoue with the LED light disclosed in Smith, to satisfy the additional limitations found in dependent claims 2, 3, 4, 5, 6 and 8. EX1013 at 98-108. Dr. Schubert identifies the same alleged bypass resistor R13 in Fig. 3 of Inoue as satisfying claim 1's requirement of a "resistor bypass circuit for a series lighting circuit," that was relied upon in Ground 1. EX1013 at 100-101; *see also* EX1013 at 48-49 (Ground 1). Dr. Schubert does not rely on any of the disclosures of Smith to satisfying the underlying limitations of claim 1.

87. In my opinion, Inoue fails to disclose a "resistor bypass circuit" as required by claim 1 and 9. Please see my opinion above regarding Ground 1 in the Petition, and why Inoue does not anticipate claim of the '252 patent. Because Inoue fails to anticipate claim 1, Dr. Schubert's proposed combination of Inoue and Smith fails to render obvious dependent claims 2, 3, 4, 5, 6, 7, and 8.

88. Like claim 1, independent claim 9 requires a "resistor bypass circuit for a series lighting circuit comprising … conducting current at all times when current is flowing through the circuit regardless of whether the LED light sources are conducting current therethrough". EX1001 at 13:52-60 and 14:26-35. Claim 9

additionally requires a "LED flashing light source which includes a flashing circuit". However, Dr. Schubert's proposed combination of Inoue and Smith fails to render obvious claim 9 for the same reasons that Inoue fails to anticipate claim 1—Inoue fails to disclose a resistor bypass that continues to conduct electricity and remaining lights lit, even when one more individual lighting elements in the series are burned out. Please see my opinion above regarding Ground 1 in the Petition, and why Inoue does not anticipate claim of the '252 patent.

89. Inoue discloses "shunt sections that are connected in parallel to at least one of the serial circuits and shunts current when a voltage higher than rated voltages of the light sources is applied" to the circuit. EX1004 at [0011]. The luminance level of the LEDs vary in accordance with a change in a voltage value. EX1003 at [0005]. Inoue does not disclose that LED2 in Figure 3 will remain lit if LED1 burns out or stops carrying current, and that all current will flow through the bypass containing R12. Inoue teaches how to uses R12 and R13 to change the luminance in response to an increased or decreased the power voltage level. EX1003 at [0034]. Therefore, Inoue also does not teach the resistor bypass required by claim 9.

F. Ground 6: Holler combined with Callahan does not render claims 10, 11, 12, 13 or 14 obvious

90. Dr. Schubert contends it would have been obvious to a POSITA to combine the circuit configuration disclosed in Holler with the LED light disclosed

in Callahan, to satisfy the limitations of claims 10, 11, 12, 13 and 14. EX1013 at 111-128.[1] Dr. Schubert contends a POSITA would have been motivated to use the drive circuit in Holler with the LED light source in Callahan. EX1013 at 112-113, 122 (discussing Holler's circuit as satisfying the "bypass circuit" in independent claims 1 and 10), and at 111-112, 114, 122 (discussing motivation to combine Callahan's LED with Holler's circuit).

91. Dr. Schubert contends a POSITA would have been "motivated to implement Hollers's series lighting circuit, including the bypass resistors, by using Callahan's LED light sources, thereby conserving electrical power, attaining greater reliability, and attaining a high degree of lighting control that includes, color, brightness, and blink rate." EX1013 at 112 ¶ 3. Dr. Schubert further contends that the combination of Holler and Smith "would be a predictable combination of elements disclosed in the prior art." *Id.* ¶ 4.

92. In my opinion, a POSITA would not have been motivated to use the bypass circuit in Holler with the LED light disclosed in Callahan. LEDs have a very

[1] Dr. Schubert also provides opinions in his declaration regarding claims 1, 2, 4, and 8. EX1013 at 111. However, Ground 6 only challenges claims 10, 11, 12, 13, and 14. Pet. at 55-56. I have limited my opinions to the Challenged Claims and Grounds in the Petition.

different voltage characteristic than incandescent bulbs. LED lights do not have resistance like an incandescent bulb. As explained above, LED lights have an exponential current vs. voltage relationship (described by the Shockley diode equation) rather than a linear current vs. voltage relationship as found in a simple resistance. As previously discussed, the bypass circuit in Holler is designed for incandescent bulbs, which tolerate voltage fluctuations and rely on thermal resistance changes for current regulation. EX1004 at 1:96–101. LEDs, like the ones in Callahan, require current regulation and lack the thermal-driven resistance increase seen in incandescent bulbs, making the bypass circuit in Holler unsuitable for protecting LEDs from overcurrent. EX1009 at [0025].

G. Ground 7: Yu

93. As I have stated above, I have not considered the Petition's arguments in Ground 7, based on Yu, although I reserve the right to do so at a later time, to the full extent allowable by the Board's procedural rules.

I, Ted K. Higman, Ph.D., declare under penalty of perjury that the foregoing is true and correct to the best of my understanding and belief.

Dated: November 21, 2024

Ted K. Higman, Ph.D.

Appendix A

Ted King Higman

Professional Preparation

Purdue University	W. Lafayette, IN	Electrical Engineering	BSEE 1981
Purdue University	W. Lafayette, IN	Electrical engineering	MSEE 1982
University of Illinois	Champaign, IL	Electrical Engineering	Ph. D. 1989

Appointments

Associate Professor, University of Minnesota, Twin-Cities, 1994-present

Assistant Professor, University of Minnesota, Twin Cities, 1989-1994

Research Assistant. University of Illinois at Urbana-Champaign, 1985-1989

LSI Process Engineer, Magnavox Corp., Ft. Wayne, IN, 1983-1984

Publications

1.2V constant-gm rail-to-rail CMOS Op-Amp input stage with new overlapped transition regions technique for ECG amplifier

Lee, B. & Higman, T., 2013, *Proceedings of the Annual International Conference of the IEEE Engineering in Medicine and Biology Society, EMBS.* Vol. 2013. p. 3451-3454 4 p. 6610284. (Proceedings of the Annual International Conference of the IEEE Engineering in Medicine and Biology Society, EMBS).

1V rail-to-rail constant Gm amplifier with common-mode elimination technique

Lee, B. & Higman, T., Sep 9 2013, *2013 IEEE International Symposium on Circuits and Systems, ISCAS 2013.* p. 385-388 4 p. 6571861. (Proceedings - IEEE International Symposium on Circuits and Systems).

A 1.0 V 12-bit 500 kS/s SAR ADC with background calibration for biomedical application

Hu, C. L. & Higman, T. K., Jun 4 2013, In: Journal of Medical Devices, Transactions of the ASME. 7, 2, 020904.

A 1.2v comparator for low power adc biomedical application

Hu, C. L. & Higman, T. K., Mar 2012, In: Journal of Medical Devices, Transactions of the ASME. 6, 1, p. 1 1 p.

Extremely simple constant-gm technique for low voltage rail-to-rail amplifier input stage for portable ecg Lee, B. & Higman, T. K., Mar 2012, In: Journal of Medical Devices, Transactions of the ASME. 6, 1, p. 1 1 p.

2011

Extremely simple constant-gm technique for low voltage rail-to-rail amplifier input stage

Lee, B. & Higman, T., Dec 1 2011, *2011 18th IEEE International Conference on Electronics, Circuits, and Systems, ICECS 2011.* p. 314-317 4 p. 6122276. (2011 18th IEEE International Conference on Electronics, Circuits, and Systems, ICECS 2011).

Properties of high-k/ultrahigh purity silicon nitride stacks

Shi, X., Shriver, M., Zhang, Z., Higman, T. & Campbell, S. A., Jul 2004, In: Journal of Vacuum Science and Technology A: Vacuum, Surfaces and Films. 22, 4, p. 1146-1151 6 p.

High permittivity oxide gate stacks on silicon incorporating UHV silicon nitride interfacial layers

Shriver, M. A., Gabrys, A. M., Higman, T. K. & Campbell, S. A., 2001, *Materials Research Society Symposium - Proceedings.*Campbell, S. A., Clevenger, L. A., Griffin, P. B. & Hobbs, C. C. (eds.). Vol. 670.

Low-oxygen nitride layers produced by UHV ammonia nitridation of silicon

Shriver, M. A., Higman, T. K., Campbell, S. A., Taylor, C. J. & Roberts, J., 2001, *Materials Research Society Symposium - Proceedings.* Clenvenger, L. A., Campbell, S. A., Besser, P. R., Herner, S. B. & Kittl, J. (eds.). Vol. 611.

Real-time control of etching processes: Experimental results

Berg, J., Higman, T. K. & Tannenbaum, A. R., 1997, In: Proceedings of SPIE - The International Society for Optical

Silicon metal-oxide-semiconductor field-effect transistor with gate structures defined by scanned probe lithography

Hagedorn, M. S., Litfin, D. D., Price, G. M., Gordon, A. E. & Higman, T. K., 1996, In: Journal of Vacuum Science and Technology B: Microelectronics and Nanometer Structures. 14, 6, p. 4153-4156 4 p.

Atomic force microscope-based lithography of titanium

Gordon, A. E., Litfin, D. D., Hagedorn, M. S., Chen, J., Fayfield, R. T. & Higman, T. K., 1995, In: Materials Research Society Symposium - Proceedings. 380, p. 125-130 6 p.

Fabrication and transport measurements of atomic force microscope modified silicon metal-oxide-semiconductor field-effect transistors

Fayfield, T. & Higman, T. K., May 1995, In: Journal of Vacuum Science and Technology B: Microelectronics and Nanometer Structures. 13, 3, p. 1285-1289 5 p.

Low-pressure plasma deposition of photosensitive organosilicon polymers

Hagedorn, M. S., Higman, T. K., Fayfield, R. T. & Chen, J., May 1995, In: Journal of Vacuum Science and Technology B: Microelectronics and Nanometer Structures. 13, 3, p. 862-864 3 p.

Ultrathin nitride layers grown by molecular-beam epitaxy and their effects on interface states in silicon metal-insulator-semiconductor field-effect transistors

Fayfield, R. T., Chen, J., Hagedorn, M. S., Higman, T. K., Moy, A. M. & Cheng, K. Y., Mar 1995, In: Journal of Vacuum Science and Technology B: Microelectronics and Nanometer Structures. 13, 2, p. 786-788 3 p.

Real-space transfer by hot electron resonant tunneling

Higman, T. K., Chen, J., Hagedorn, M. S. & Williamson, F., Jun 1993, In: Superlattices and Microstructures. 13, 4, p. 397-400 4 p.

Scanning tunneling microscope-based nanolithography for electronic device fabrication

Lyding, J. W., Brockenbrough, R. T., Fay, P. J., Tucker, J. R., Hess, K. & Higman, T. K., Oct 3 1993, In: Proceedings of SPIE - The International Society for Optical Engineering. 10310, p. 111-126 16 p., 1031008.

Observation of light emission from real-space transfer devices

Higman, T. K., Hagedorn, M. S., Chen, J. & Cheng, K. Y., 1992, In: Applied Physics Letters. 60, 11, p. 1342-1344 3 p.

Dynamics of heterostructure hot-electron diodes

Arnold, D., Hess, K., Higman, T., Coleman, J. J. & Iafrate, G. J., 1989, In: Journal of Applied Physics. 66, 3, p. 1423-1427 5 p.

Observation of apparent inelastic tunneling between Landau levels in superlattices

Higman, T. K., Favaro, M. E., Miller, L. M., Emanuel, M. A. & Coleman, J. J., 1989, In: Applied Physics Letters. 54, 18, p. 1751-1753 3 p.

Strained layer InGaAs channel negative-resistance field-effect transistor

Favaro, M. E., Fernández, G. E., Higman, T. K., York, P. K., Miller, L. M. & Coleman, J. J., 1989, In: Journal of Applied Physics. 65, 1, p. 378-380 3 p.

Ensemble Monte Carlo simulation of real space transfer (NERFET/CHINT) devices

Kizilyalli, I. C., Hess, K., Higman, T., Emanuel, M. & Coleman, J. J., 1988, In: Solid State Electronics. 31, 3-4, p. 355-357 3 p.

Microwave Frequency Operation of the Heterostructure Hot-Electron Diode

Kolodzey, J., Laskar, J., Higman, T. K., Emanuel, M. A., Coleman, J. J. & Hess, K., 1988, In: IEEE Electron Device Letters. 9, 6, p. 272-274 3 p.

Room-temperature switching and negative differential resistance in the heterostructure hot-electron diode

Higman, T. K., Miller, L. M., Favaro, M. E., Emanuel, M. A., Hess, K. & Coleman, J. J., 1988, In: Applied Physics Letters. 53, 17, p. 1623-1625 3 p.

Theoretical and experimental investigations of the heterostructure hot electron diode

Emanuel, M. A., Higman, T. K., Higman, J. M., Kolodzey, J. M., Coleman, J. J. & Hess, K., Jan 1 1988, In: Solid State Electronics. 31, 3-4, p. 589-592 4 p.

Observation of the transition associated with real-space transfer of a two-dimensional electron gas to a three-dimensional electron distribution in semiconductor heterolayers

Higman, T. K., Manion, S. J., Kizilyalli, I. C., Emanuel, M. A., Hess, K. & Coleman, J. J., 1987, In: Physical Review B. 36, 17, p. 9381-9383 3 p.

SWITCHING MECHANISM IN THE HETEROSTRUCTURE HOT-ELECTRON DIODE.

Higman, T. K., Higman, J. M., Emanuel, M. A., Hess, K., Coleman, J. J. & Kolodzey, J., Nov 1 1987, In: IEEE Transactions on Electron Devices. ED-34, 11

Theoretical and experimental analysis of the switching mechanism in heterostructure hot-electron diodes

Higman, T. K., Higman, J. M., Emanuel, M. A., Hess, K. & Coleman, J. J., 1987, In: Journal of Applied Physics. 62, 4, p. 1495-1499 5 p.

VIA-1 The Switching Mechanism in the Heterostructure Hot-Electron Diode

Higman, T. K., Higman, J. M., Emanuel, M. A., Hess, K., Coleman, J. J. & Kolodzey, J., Nov 1987, In: IEEE Transactions on Electron Devices. 34, 11, p. 2381 1 p.

New ultrafast switching mechanism in semiconductor heterostructures

Hess, K., Higman, T. K., Emanuel, M. A. & Coleman, J. J., 1986, In: Journal of Applied Physics. 60, 10, p. 3775-3777 3 p.

Structural analysis of Au-Ni-Ge and Au-Ag-Ge alloyed ohmic contacts on modulation-doped AlGaAs-GaAs heterostructures

Higman, T. K., Emanuel, M. A., Coleman, J. J., Jeng, S. J. & Wayman, C. M., 1986, In: Journal of Applied Physics. 60, 2, p. 677-680 4 p.