UNITED STATES PATENT AND TRADEMARK OFFICE

BEFORE THE PATENT TRIAL AND APPEAL BOARD

LEDUP MANUFACTURING GROUP LTD.,
Petitioner,

v.

SEASONAL SPECIALTIES, LLC,
Patent Owner.

Case IPR2024-01258
U.S. Patent No. 11,096,252

PATENT OWNER RESPONSE

TABLE OF CONTENTS

I. Introduction 1

II. The ’252 Patent 2

A. Date of Invention 2

B. Person of Ordinary Skill in the Art (POSITA) 2

C. Overview of the ’252 Patent 3

III. Claim Construction 7

A. “A resistor bypass circuit for a series lighting circuit” 7

IV. Petitioner’s Cited References 9

A. Inoue (EX1003) 9

B. Holler (EX1004) 10

C. Smith (EX1007) 11

D. Fisherman (EX1008) 12

E. Callahan (EX1009) 12

F. Yu (EX1010) 13

V. None of the Grounds in the Petition Establish a Reasonable Likelihood that Any Challenged Claim Is Unpatentable 13

A. Ground 1: Inoue does not anticipate any of the Challenged Claims 14

B. Ground 2: Inoue combined with Holler does not render claims 1 and 10 obvious 16

C. Ground 3: Holler combined with Smith does not render claims 1, 10, or 11 obvious 21

D. Ground 4: Fisherman combined with Callahan does not render claims 1, 5, 6, 7, or 9 obvious 24

E. Ground 5: combining Inoue with Holler is non-obvious 27

F. Ground 6: Holler combined with Callahan does not render claims 10, 11, 12, 13 or 14 obvious 29

G. Ground 7: Yu does not constitute prior art.....30

H. Grounds 2-7: The Petition Should Be Denied Because Petitioner Failed to Address Compelling Objective Evidence of Non-Obviousness that Petitioner Was Aware Of.....35

VI. Conclusion 42

TABLE OF AUTHORITIES

Cases

Coalition for Affordable Drugs V LLC v. Hoffman-LaRoche Inc.
IPR2015-01792 (PTAB Mar. 11, 2016) 38

Cooper v. Goldfarb
154 F.3d 1321 (Fed. Cir. 1998) 31

Dynamic Drinkware, LLC v. Nat'l Graphics, Inc.
800 F.3d 1375 (Fed. Cir. 2015) 32

Ecolochem, Inc. v. S. Cal. Edison Co.
227 F.3d 1361 (Fed. Cir. 2000) 38

Gilead Scis., Inc. v. United States
IPR2019-01453 (PTAB Feb. 20, 2020).....38

Gilead Scis., Inc. v. United States
IPR2019-01455 (PTAB Feb. 5, 2020).....38

In re Cyclobenzaprine Hydrochloride Extended-Release Capsule Patent Litig.
676 F.3d 1063 (Fed. Cir. 2012) 35

Knorr v. Pearson
671 F.2d 1368 (C.C.P.A. 1982). 32

LG Elec.s, Inc. v. Wi-LAN Inc.
No. IPR2018-00704 (PTAB Sept. 5, 2018).....30

Medtronic, Inc. v. Teleflex Innov. S.À.R.L.
68 F.4th 1298 (Fed. 2023) 31, 32

Merial Ltd. v. Virbac
IPR2014-01279 (PTAB Jan. 22, 2015).....38

Paulik v. Rizkalla
760 F. 2d 1270 (Fed. Cir. 1985) 30

Perfect Surgical Techniques, Inc. v. Olympus Am., Inc.
841 F.3d 1004 (Fed. Cir. 2016) 32

Polaris Indus. v. Arctic Cat, Inc.
882 F.3d 1056 (Fed. Cir. 2018) 39, 40

Robert Bosch Tool Corp. v. SD3, LLC
IPR2016-01753 (PTAB Mar. 22, 2017) 37, 38, 40

Sequenom v. Leland Stanford Junior Univ.
No. IPR2013-00390 (PTAB Nov. 25, 2014) 31

Shindlear v. Holdeman
628 F.2d 1337 (C.C.P.A. 1980) 30

Stryker Corp. v. KFx Medical, LLC
No. IPR2019-00817 (PTAB Sept. 16, 2019) 38

Transocean Offshore Deepwater Drilling, Inc. v. Maersk Drilling USA, Inc.
699 F.3d 1340 (Fed. Cir. 2012) 35

WBIP, LLC v. Kohler Co.
829 F.3d 1317 (Fed. Cir. 2016) 40

Statutes

35 U.S.C. § 102 .....1, 12, 30, 31

35 U.S.C. § 103 1

EXHIBIT LIST

Exhibit Number	Description
2001	Affidavit of Courtland C. Merrill in Support of Pro Hac Vice Admission
2002	Declaration of Ted K. Higman, Ph.D.
2003	Curriculum Vitae of Ted. K. Higman, Ph.D.
2004	U.S. Provisional App. No. 60/876,868
2005	Declaration of Steven Altamura, dated September 1, 2022, filed during prosecution of US 11,533,794 (SS00000974-975)
2006	U.S. Patent No. 5,886,423 to Gershen
2007	Scocca, T., *The New Light is Bad, There's something off about LED bulbs—which soon be, thanks to a federal ban, the only king you can buy*, The Strategist, New York Magazine, March 30, 2023
2008	Christmas Light Source, *Current light bulb laws: Can I still purchase glass Christmas lights?* July 19, 2023
2009	Intentionally Left Blank
2010	First Amended Complaint for Patent Infringement, in *Seasonal Specialties, LLC v. LEDup Mfg. Group Ltd.*, 2:23-cv-06318 (C.D. Cal.) (Dkt. 19), filed on November 7, 2023
2011	Plaintiff's Responses to Defendant's First Set of Interrogatories, in *Seasonal Specialties, LLC v. LEDup Mfg. Group Ltd.*, 2:23-cv-06318 (C.D. Cal.), served on Petitioner June 24, 2024.
2012	Product Packaging, Philips 70 Mini Lights Warm White, by Patent Owner SS000002385
2013	Product Packaging, Philips 70 Mini Lights Multicolor, by Patent Owner SS000002386
2014	Product Packaging, Philips 100 Remains Lit Multicolor, by Patent Owner SS000002387
2015	Product Packaging, Philips 50 Remains Lit Multicolor, by Patent Owner SS000002388

Exhibit Number	Description
2016	Product Packaging, Philips 70 Superbright Mini Warm White, by Patent Owner SS000002390
2017	Product Packaging, Philips 70 Superbright Mini Multicolor, by Patent Owner SS000002391

I. Introduction

Patent Owner Seasonal Specialties, LLC submits this Patent Owner Response to the Petition for *Inter Partes* Review by Petitioner related to claims 1-14 (the "Challenged Claims") of U.S. Patent 11,096,252 (the "'252 patent"). Patent Owner respectfully requests the Board deny the Petition. Patent Owner submits that the Grounds presented and the prior art relied on by Petitioner fail to render any of the Challenged Claims unpatentable under 35 U.S.C. §§ 102 or 103 because the prior art fails to disclose or render obvious all of the limitations of the Challenged Claims. Patent Owner's Preliminary Response is supported by the Declaration of Ted K. Higman, Ph.D. EX2002.[1] Moreover, art relied on by Petitioner does not qualify as prior art. Finally, Petitioner does not address the objective indicia of non-obviousness, even though Petitioner was fully aware of the commercial success and long-felt need associated with the claimed invention before filing the Petition. There is nothing in the Petition to explain that Petitioner has counteracted this known

[1] All Exhibits (EX2001-EX2017) to this Response are identical to the exhibits submitted in Patent Owner's Preliminary Response (Paper No. 8), and are incorporated herein.

evidence and established invalidity by a preponderance of the evidence. For at least these reasons, the Board should deny this Petition.

II. The '252 Patent

A. Date of Invention

Patent Owner submits that for the reasons discussed in section V(G) below, the date of invention for each of the Challenged Claims is no later than January 15, 2006.

B. Person of Ordinary Skill in the Art (POSITA)

The Petition proposes a definition of a person of ordinary skill in the art (POSITA) as having: "*a bachelor's degree in electrical engineering, physics, materials science, or a related discipline, and four years of practical experience in designing or fabricating LED lighting systems, including controlling and driving LEDs. Alternatively, a POSITA would have had a master's degree and three years of experience, or a Ph.D. degree and two years of experience.*" Pet. at 18 referring to Expert Declaration EX1013[2] at 31-32 ¶ 1-4. Patent Owner does not necessarily agree with this proposed definition, but accepts the definition for purposes of this Response, reserving all of rights to object to and propose a different or an amended definition.

[2] Exhibits EX1001-EX1014 to the Petition (Paper No. 2) are incorporated herein.

C. Overview of the ’252 Patent

1. Background of the Invention

Decorative lighting products are often connected in “series” in a string of lights, whereby electrical current flows from one light to the next in the circuit, end-to-end. EX1001 at 1:26-34. A drawback to series connected decorative lighting strings is that when a lighting source, e.g., a bulb, is removed from the circuit, is burnt out, defective, broken, is missing, or has a loose connection, the entire lighting circuit is rendered inoperable. *Id.* at 1:35-45.

To address this drawback, lighting string manufacturers utilize circuit bypasses to permit electrical current to continue to flow through the circuit even though after one or more bulbs in the lighting string have become inoperable. For example, U.S. Patent No. 5,886,423 to Gershen discloses a lighting string containing incandescent bulbs with a parallel solid state bypass circuit that conducts electricity only when the bulb becomes inoperable. EX2006; EX1002, File History at 130-32. When one or more bulbs in the Gershen system become inoperable, the bypass then permits current to bypass the inoperable lamp and flow to the remaining bulbs.

Drawbacks remain, however, with circuit bypasses. The solid state bypass circuit in Gershen creates no voltage load on the circuit, until engaged when a bulb in the circuit fails. EX1002, File History at 160; EX2002 ¶ 31. When engaged, the

bypass circuits like those described in Gershen provide insufficient resistance to that portion of the circuit bypassed. If enough bulbs fail, the circuit current will increase causing early failure of the remaining bulbs as too much current flows through the remaining bulbs, overheating them and causing them to prematurely fail.

2. The ’252 Resistive Bypass Patent

The ’252 patent discloses an improved light circuit for series circuits disclosing a resistive bypass element that will continue to conduct electricity and keep the remainder of the series circuit of lights lit even when one or more individual lighting elements are burnt out, defective, broken, removed/missing, have a loose connection or a broken connection. EX1001, Technical Field of Invention.

FIG. 2 of the ’252 patent illustrates an embodiment of the invention that uses LEDs as a light source. EX1001 at 5:66-6:13. A power source 12 provides power to bypass circuit 20.

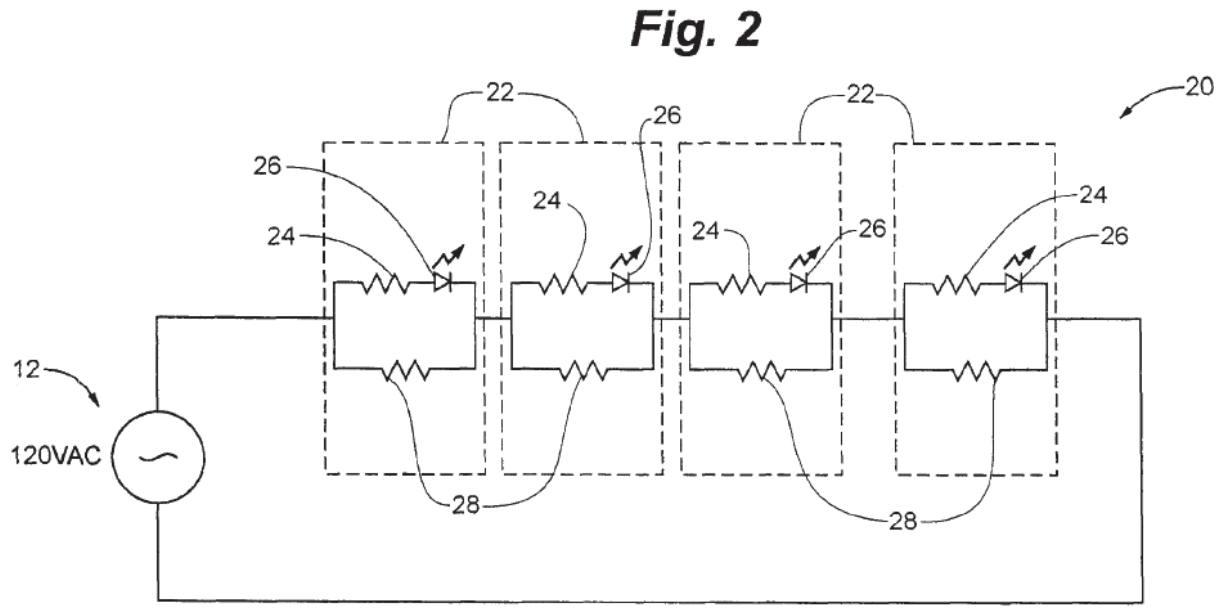

EX1001 at Figure 2.

When all light sources 26 are operable, current flows through the circuit, with a portion of the total current flows through the path containing current limiting resistor 24 and light source 26, while the remainder flows through bypass resistor 28. EX1001 at 6:14-19. When current flow is interrupted through a light source 26, total current flows through the corresponding bypass resistor 28, allowing the remaining light sources 26 to operate. *Id.* at 6:19-22.

The ’252 patent contains three independent claims: 1, 9 and 10. Illustrative independent claim 1 recites:

> 1. A resistor bypass circuit for a series lighting circuit comprising a plurality of serially connected LED light sources and a bypass resistor

> being connected in parallel with at least one of the respective light sources, said bypass resistor being in circuit and conducting current at all times when current is flowing through the circuit regardless of whether the LED light sources are conducting current therethrough and wherein said bypass resistor is capable operating on a one hundred percent duty cycle.

EX1001 at 13:52-59.

Claims 2, 3, 4, 5, 6, 7, and 8 depend from claim 1. EX1001 at 13:51-63. Claim 2 adds the requirement that the resistor bypass circuit of claim 1 is "series-parallel connected." *Id.* at 13:61-62. Claims 3 and 5 add the requirement that the light source provides a "twinkling effect." *Id.* at 13:63-14:3, 14:6-8. Claim 4 limits power usage of the LED to "0.20 watts or less." *Id.* at 14:3-5. Claim 6 requires a "light source utilizing . . . circuits that control the flashing rate of the light source". *Id.* at 14:8-13. Claim 8 specifies power source of the circuit, e.g., batteries, or step down transformers. *Id.* at 14:20-25.

Claims 11, 12, 13, and 14 depend from claim 10. EX1001 at 14:48-63. Claim 11 adds the requirement that the light source provide "color changing characteristics." *Id.* at 14:48-49. Claim 12 adds the requirement that the light sources "utilize[e] LED packages that incorporate two or more LED chips". *Id.* at 14:50-54.

Claim 13 adds the requirement that integrated circuit used in the circuit provide for mixing of LED colors. *Id.* at 14:55-59. Claim 14 adds the requirement that the integrated circuit providing control only affect individual lighting elements. *Id.* at 14: 59-63.

III. Claim Construction

Petitioner identifies multiple claim terms that purportedly have "a special meaning that is set forth in the specification or, a special meaning in the lighting industry". Pet. at 18. Patent Owner does not necessarily agree with Petitioner's proposed constructions. However, for purposes of addressing the issue, only the construction of the claim phrase "resistor bypass circuit for a series lighting circuit," contained in each independent claim 1, 9, and 10, is necessary.

A. "A resistor bypass circuit for a series lighting circuit"

The '252 patent claims a specific "bypass resistor" designed to ensure that other lights in the series circuit remain lit when one light breaks, burns out, becomes defective, is missing/removed, or has a loose connection. This "bypass" is not merely any generic bypass but one with particular attributes and functionalities that are integral to the invention's purpose and claims. For instance, the '252 patent discloses that "[t]he bypass circuit . . . has an advantage of keeping the remainder of lights within a series lighting circuit lit when a light source is missing from, or

becomes loose in, one or more light source sockets or circuits, or becomes defective". EX1001 at 4:16–24.

Moreover, the claims themselves establish that the "resistor bypass circuit for a series lighting circuit" is limited to one in which keeps the remaining lights within a series circuit lit when a light source is missing, becomes loose, or becomes defective. Claim 1 of the '252 patent recites a "resistor bypass circuit for a series lighting circuit comprising … *conducting current at all times when current is flowing through the circuit regardless of whether the LED light sources are conducting current therethrough*". EX1001 at 13:52-60; *see also* claims 9 and 10 (same language). This additional claim language, requiring that the bypass conduct current at all times "regardless of whether the LED light sources are conducting current therethrough," makes clear that the claimed bypass continues to conduct electricity, and keeps the remaining lights lit, even when one more individual lighting elements in the series are burned out, missing or defective. EX1001, Technical Field of Invention.

Patent Owner submits that limiting the claim phrase, a "resistor bypass circuit for a series lighting circuit," to a bypass that continues to conduct electricity, and keeps the remaining lights lit, even when one more individual lighting elements in

the series are burned out, missing or defective, is also consistent with the multiple "special" constructions that Petitioner proposes.

IV. Petitioner's Cited References

Petitioner's cited references are readily distinguished from the Challenged Claims, and merely illustrate early approaches to decorative lighting improved upon by the '252 patent.

A. Inoue (EX1003)

Inoue discloses "a lighting device and a lighting system that allows a plurality of light sources to light up at different luminance levels from each other." EX1003 ¶ [0002].

FIG. 3

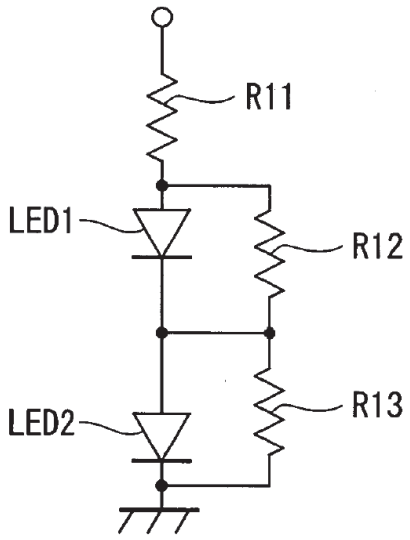

EX1003, Fig. 3.

Inoue does not disclose a resistive bypass element that will continue to conduct electricity and keep the remainder of the series circuit of lights lit even when one or more individual lighting elements are burnt out, defective, broken, missing/removed, have a loose connection or a broken connection. EX2002 ¶ 43. Inoue teaches a circuit configuration that allows the luminance levels of each LED to vary in accordance with a change in a voltage value without using a constant-voltage circuit, simplifying the circuit configuration. EX1003 at [0005].

In the lighting circuit shown in Fig. 3 in Inoue, "the resistance valued of the resistors R12 and R13 are set such that luminance levels under the rated voltage become desired luminance levels, so that each of the LEDs 1 and 2 lights up at a predetermined luminance level". EX2002 ¶ 44, citing EX1003 at [0034]. The shunt sections containing R12 and R13 connected in parallel with the LEDs in Fig. 3 adjust luminance levels of the LEDs. *Id.* The bypass containing resistors R12 and R13 do not permit LED1 or LED2 to remain lit if either lighting element burns out, breaks, or has a loose or a broken connection. *Id.*

B. Holler (EX1004)

Holler discloses a plurality of incandescent lamps 5 connected in series; it does not disclose use of LED lights. EX1004 at 1:42-43 and Figures 4-5. EX2002 ¶ 45.

Holler discloses resistance shunts 6 (see Fig. 2) with resistance at least equal to lamps 5 and approximately twice the current carrying capacity. EX1004 at 2:96-102.

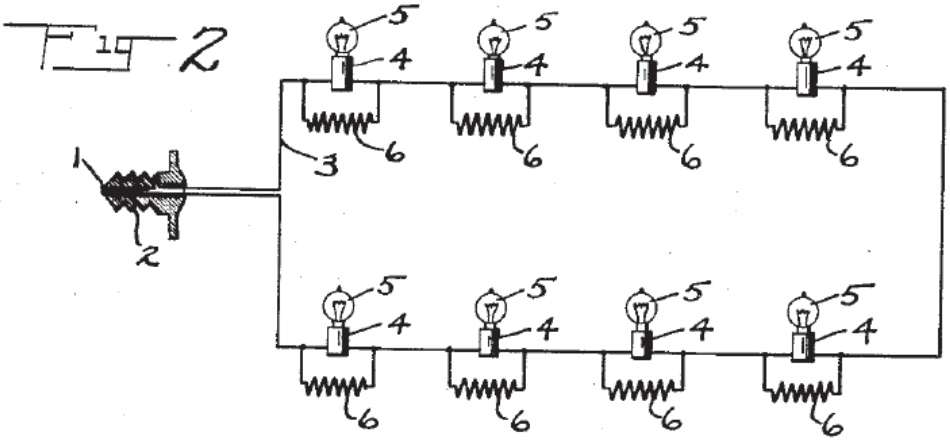

EX1004 at Fig. 2; EX2002 ¶ 46. Holler issued as a patent in 1922. Holler predates any use of LEDs and does not provide any disclosures specific to LEDs.

C. Smith (EX1007)

Smith discloses light-emitting diode (LED) string lights connected in series. EX1007 at Abstract. Smith describes the "shortcomings" of incandescent light bulbs, including "relatively short life due to frequent, burnout, breakage, and the like," among other issues. EX1007 at 1:20-33. Smith, however, does not suggest that the LED light strings would benefit from use with a bypass resistor, to keep the string lit one of the LEDs becomes burned out, broken or otherwise inoperable.

D. Fisherman (EX1008)

Fisherman is discussed in the specification of the Resistive Bypass Patents and of record during examiner. EX1001 at 1:46-64; see also References Cited. Fisherman discloses a series circuit for a light set with individual incandescent bulbs. EX1008 at 2:9-17 describing lighting filament 11 and lamp 10.

Fisherman discloses that the lighting filament 11 of lamp 10 is shunted by resistance 13. EX1008 at 1:39-40, 2:9-20. Fisherman also discloses that the "resistance 13 are so dimensioned that when the system functions normally, the electrical current will flow through the filaments 11 of the lamps 10, so that all the lamps 10 will be illuminated." *Id.* 2:18-21. Therefore, Fisherman discloses that the resistance 13 is largely non-conducting current, until the bimetallic strip 12 overheats and moves away from the filament. *Id.* 2:23-32. The lamp then ceases to be illuminated, the electrical current is diverted to the shunt 13, but all the remaining lamps continue to be illuminated. *Id.*

E. Callahan (EX1009)

Callahan discloses a decorative lighting system that uses Pulse Width Modulation (PWM), controlled by an integrated circuit, to create blink rates undetectable to the human eye, to control brightness and otherwise vary the lighting display. EX1009 at 4:17-22, 4:29-35, 4:41-45. Callahan disclose use of an integrated

circuit to create PWM waveforms and "prescaler registers 36, 38 that combine to permit blink rates of the LEDs to be selected. The prescalers 36, 38 generate the period the PWM signal from a high frequency oscillator." *Id.* at 4:17-20. Callahan discloses that brightness is also controlled by brightness registers generating a high frequency PWM signal. *Id.* 4:41-45.

F. Yu (EX1010)

Yu was filed on July 31, 2006. EX1010. Yu was made of record before the examiner during prosecution of the Resistive Bypass Patents. EX1001, References Cited. Yu, however, does not qualify as prior art under 35 U.S.C. § 102(e) (pre-AIA) because date of invention for the Resistive Bypass Patents predates the July 31, 2006, filing date of Yu. See section V(G) below.

V. None of the Grounds in the Petition Establish by a Preponderance of the Evidence that Any Challenged Claim Is Unpatentable

The Petition asserts the following Grounds for cancellation:

	Grounds	Reference(s)	Challenged Claims
1.	§ 102	Inoue	1
2.	§ 103	Inoue in view of Holler	1, 10
3.	§ 103	Holler in view of Smith	1, 10, 11
4.	§ 103	Fisherman in view of Callahan	1, 5, 6, 7, 9

5	§ 103	Inoue in view of Smith	2, 3, 4, 5, 6, 8, 9
6	§ 103	Holler in view of Callahan	10, 11, 12, 13, 14
7	§ 103	Yu	1, 2, 10

Pet. at 24.

The Petition should be denied. Grounds 1-6 fail to account for key claim limitations that are expressly missing from the asserted references. The arguments for motivation to combine references in Grounds 2-7 fail to pass muster. Ground 7 fails because the Yu reference does not quality as prior art. Grounds 2-7 also fail because Petitioner does not address the objective indicia of non-obviousness it was aware of before it filed the Petition. Accordingly, the Petition must be denied.

A. Ground 1: Inoue does not anticipate any of the Challenged Claims

The Petition fails to establish that Inoue discloses a "resistor bypass circuit" as claimed in the '252 patent. The Petition contends that Inoue discloses every limitation, and, therefore, anticipates claim 1 of the '252 patent. Pet. at 24; EX1013 at 47-56. The Petition identifies the bypass resistor R13 in Fig. 3 of Inoue as satisfying claim 1's requirement of a "*resistor bypass circuit for a series lighting circuit.*" Pet. at 24-25; EX1013 at 48-49.

Inoue discloses a lighting device and lighting systems that "allows a plurality of light sources to light up at different levels." EX1003 at [0002]. Inoue discloses a

circuit configuration that "allows luminance levels of each of LEDs to vary in accordance with a change in a voltage value without using a constant-voltage circuit". EX1003 at [0005].

Claim 1 of the '252 patent recites a "resistor bypass circuit for a series lighting circuit comprising … conducting current at all times when current is flowing through the circuit regardless of whether the LED light sources are conducting current therethrough". EX1001 at 13:52-60. The additional claim language, requiring that the bypass conduct current at all times "regardless of whether the LED light sources are conducting current therethrough," makes clear that the claimed bypass continues to conduct electricity, and keep the remaining lights lit, even when one more individual lighting elements in the series are burned out, loose, broken/missing, or defective. EX1001, Technical Field of Invention.

Inoue's bypass is not a resistor bypass that continues to conduct electricity and keeps the remaining lights lit, even when one more individual lighting elements in the series are out, loose, broken, missing/removed, or defective. EX2002 ¶ 57. Inoue's circuit configuration shown in Fig. 3 and other figures in the patent's specification has the LEDs always carrying current when the circuit is powered. *Id.*

Inoue discloses "shunt sections that are connected in parallel to at least one of the serial circuits and shunts current when a voltage higher than rated voltages of the

light sources is applied" to the circuit. EX1003 at [0011]. The luminance level of the LEDs vary in accordance with a change in a voltage value. *Id.* at [0005].

Inoue does not disclose that LED2 in Figure 3 will remain lit if LED1 burns out or stops carrying current, for example if the LED is loose, missing , or removed from the circuit, and that all current will flow through the bypass containing R12. EX2002 ¶ 59. Inoue teaches how to use R12 and R13 to change the luminance in response to an increased or decreased the power voltage level. EX1003 at [0034].

The figure on page 53 of Petitioner's expert declaration, showing Figure 3 of Inoue with an "open circuit," is an annotation of Figure 3, in which Petitioner's expert drew the circuit open. EX2002 ¶ 60. Nowhere in the specification or drawings does Inoue suggest or encourage use of the circuit configuration as suitable as bypass if the light source LED1 or LED2 has failed (burned out, or is loose, missing, or removed from the circuit). EX1013 at 54 ¶ 4.

B. Ground 2: Inoue combined with Holler does not render claims 1 and 10 obvious

The Petition fails to show that a POSITA would have been motivated to combine the LED disclosed in Inoue with the circuit configuration in Holler's 1924 patent. The Petition contends a POSITA would have been motivated to use the drive circuit in Holler with the LED light sources of Inoue. Pet. at 26-27; EX1013 at 60 ¶ 2.

Petitioner's expert contends "Inoue teaches that LEDs and incandescent bulbs are equally suitable for us in lighting strings, and, given the similar drive voltages for both types of light sources (about 3.0 V), are in fact interchangeable." EX1013 at 57. Petitioner's expert further contends that in 2006 a POSITA would have been motivated to replace the incandescent light source of Holler with the LED light source taught by Inoue. *Id.*

However, the Petition fails to offer a reasoned explanation why a POSITA would have been motivated to use the bypass circuit in Holler with the LED light disclosed in Inoue. The Petition contends motivation only generally because Inoue and Holler are from the larger field of all illumination devices connected in parallel. Pet. at 26-27. As discussed above regarding Ground 1, Inoue's bypass is not a resistor bypass that continues to conduct electricity and keeps the remaining lights lit, even when one more individual lighting elements in the series are out. Inoue and Holler's alleged resistor bypass circuit serve a very different function. Inoue's circuit is not intended to keep other light sources lit if one light source fails.

The Petition's suggestion (at 27) that Holler's teaching of selective resistive values would suggest replacement of an incandescent bulb with an LED is not technologically correct, and even Petitioner's expert does not seem to claim that Holler's resistive values are appliable to LEDs. LEDs have a very different current

vs. voltage characteristic than incandescent bulbs. EX2002 ¶ 62. LED lights do not have resistance like an incandescent bulb. LED lights have an exponential current vs. voltage relationship (described by the Shockley diode equation) rather than a linear current vs. voltage relationship such as is found in a simple resistance, such as seen in an incandescent bulb. A POSITA who considered using a resistor bypass would quickly come to the conclusion that the design procedure in Holler is not useful. *Id*.

Moreover, decorative incandescent light strings continue to sell to this day because of their illumination appearance. EX2002 ¶ 63. A POSITA would not be motivated to replace an incandescent light bulb with an LED, as incandescent light sources still have a place in decorative lighting, compared to other industries, both lighting and non-lighting. This is true today and would have been true even more so at the time of effective filing date for the ’252 patent. For example, in contrast, commercial lighting is almost all LED, same with automotive lighting. Much of this is due to the comforting effects of incandescent lights to those familiar to them verses some of the harsh or vibrant lighting LEDs can produce. EX2007 and EX2008 (articles showing users’ preferences for incandescent decorative lights despite availability of LEDs).

The Petition argues that one would make the proposed modification with a reasonable expectation of success "since Holler expressly teaches that the other serially connected LEDs will remain lit with the same illumination if a light source fails," Pet. at 27, and that doing so would have "predicable" results. Pet. at 28. But neither the Petition nor Petitioner's expert addresses the differences between LEDs and incandescent bulbs in terms of voltage characteristics.

A POSITA would not have a reasonable expectation that use of the shunt in Holler's circuit would be successful for use with the LED disclosed in Inoue, due to the very different current vs. voltage characteristic between LEDs and incandescent bulbs. EX2002 ¶ 64. LEDs have a non-linear current-voltage relationship and are sensitive to small changes in voltage. The circuit design in Inoue includes Zener diodes in which each Zener diode has a breakdown voltage that is equivalent or slightly greater than each of the rated voltage of each LED. EX1003 at [0025]. The Zener diodes serve to handle the sensitivity of LEDS from voltage variations.

In contrast, incandescent bulbs have a linear resistive relationship between voltage and current under steady-state conditions (i.e., their resistance changes predictably with temperature which stabilizes in milliseconds as the filament heats up when the incandescent bulb is first turned on). EX2002 ¶ 65. Because of this, the bypass circuit in Holler does not need components for precise current control such

as Zener diodes because the bulbs can tolerate and moderate voltage variations themselves. EX1004 at FIG. 3.

Neither the Petitioner nor Petitioner's expert addresses these differences between LEDs and incandescent bulbs. Petitioner's expert mentions Holler's disclosure of bypass resistance equal to the resistance of the lamp. EX1013 at 58, citing Holler 1:96-101. However, the word resistance is not useful when describing LEDs as opposed to incandescent bulbs. EX2002 ¶ 66. LED lights have an exponential current vs. voltage relationship (described by the Shockley diode equation) rather than a linear current vs. voltage relationship as found in a simple resistance, such as seen in incandescent light bulbs. *Id.*

As previously discussed, incandescent bulbs possess inherent resistance, which increases with temperature and stabilizes in milliseconds as the filament heats up when the incandescent bulb is first turned on. EX2002 ¶ 67. This property helps self-regulate the current through the bulb. *Id.* LEDs, however, do not exhibit self-regulating resistance. *Id.* Without a proper current-regulating mechanism, the bypass resistances in Holler's circuit would fail to prevent current surges, resulting in possible LED damage. *Id.* The bypass circuit in Holler does not include Zener diodes as it relies on the resistances in parallel with incandescent bulbs, which are linear resistive elements and can tolerate larger voltage variations without damage.

EX1004 at 1:96–101. In other words, Holler's bypass circuit uses resistors without the precise current regulation needed for LEDs, making it unsuitable for LED operation.

The shunt in the bypass circuit of Holler is designed for incandescent bulbs with their linear resistance and higher voltage tolerances. EX2002 ¶ 68. Applying this shunt to LEDs, like those in Inoue, would likely result in overcurrent damage to the LEDs without current-limiting components. *Id.*

This would have made the design a much more involved mathematical exercise than the simple one suggested by Holler where he suggests matching the bypass resistor to the resistance of the light source. EX2002 ¶ 69. Petitioner's expert's assertion that Holler's teachings can be applied in a predictable manner to Inoue's bypass resistors (page 58, first paragraph of Schubert declaration) is a gross oversimplification of the design process. EX2002 ¶ 69.

C. Ground 3: Holler combined with Smith does not render claims 1, 10, or 11 obvious

The Petition fails to show that a POSITA would have been motivated to use the drive circuit in Holler with the LED light sources of Smith. Pet. at 32-33; EX1013 at 69-71 ¶ 5. Petitioner's expert contends a POSITA "would be motivated to replace the obsolete … incandescent light sources with modern . . . LED light sources." EX1013 at 71 ¶ 5. Petitioner's expert further contends that "the incandescent light

sources of Holler can be easily replaced by the LED light sources of Smith, and a POSA would be motivated to implement such a replacement". *Id.* ¶ 6.

The Petition does not explain, however, why a POSITA would have expected to successfully overcome the very different current vs. voltage characteristics of incandescent bulbs versus LEDs. EX2002 ¶ 71. LED lights do not have resistance like an incandescent bulb. *Id.* LED lights have an exponential current vs. voltage relationship (described by the Shockley diode equation) rather than a linear current vs. voltage relationship as found in a simple resistance, such as seen in an incandescent bulb. *Id.* This is not to be confused with the terms "small signal resistance" or "dynamic resistance" which do not apply here. *Id.*

Moreover, as discussed above, decorative incandescent light strings continue to sell to this day because of their illumination appearance. EX2007 and EX2008 (articles showing users' preferences for incandescent decorative lights despite availability of LEDs); EX2002 ¶ 72.

A POSITA would not have been motivated to replace an incandescent light bulb with and LED as incandescent light sources still have a place in decorative lighting, compared to other industries, both lighting and non-lighting. EX2002 ¶ 72. This is true today and would have been true even more so at the time of effective filing date for the '252 patent. *Id.*

As previously discussed, incandescent bulbs possess inherent resistance, which increases with temperature and stabilizes in milliseconds as the filament heats up when the incandescent bulb is first turned on. EX2002 ¶ 73. This property helps self-regulate the current through the bulb. *Id.* LEDs, like the ones used in Smith, have non-linear current-voltage relationship such that small voltage increases can lead to disproportionately large current surges, which LEDs are unable to handle without appropriate current regulation. *Id.*

A POSITA would not have a reasonable expectation that use of the shunt in Holler's circuit would be successful for use with the LED disclosed in Smith. The LEDs in Smith "generate very little heat" due to its low energy consumption while presenting no dangers of fire. EX1007 at 240–42; EX2002 ¶ 74. Although the LEDs in Smith generate minimal heat, LEDs that generate minimal heat are prone to overcurrent, and the bypass circuit in Holler lacks current-limiting features as it primarily relies on the thermal resistance of incandescent bulbs. *Id.*

Petitioner's expert mentions Holler's disclosure of bypass resistance approximately twice the current carrying capacity to that of the lamp. EX1013 at 79 ¶ 3, citing Holler 1:97-101. However, resistance is very different in LEDs than incandescent bulbs. EX2002 ¶ 76.

The bypass circuit in Holler is designed for incandescent bulbs operating at voltages around 15 V per bulb. EX1004 at 1:85-87. A typical forward voltage of an LED ranges from 1.2 to 3.6 V. EX2002 ¶ 77. The bypass resistors in Holler would reasonably fail to protect the LED but also create a mismatch in voltage distribution across the bypass circuit. *Id.*

Additionally, a bypass resistor carrying twice the current of an LED would result in significant overcurrent flowing through the LED during normal operation or a failure. EX2002 ¶ 78. LEDs, with their non-linear behavior and sensitivity to overcurrent, would not function safely in Holler's circuit without additional current-limiting components. *Id.*

Holler is likely taking a normal precautionary step of over building a component in order to safeguard against failure. EX2002 ¶ 79. There is nothing material about twice the current carrying capacity. *Id.* The increased current carrying capacity would not alleviate any of current and voltage characteristic differences between LEDs and incandescent bulbs. *Id.*

D. Ground 4: Fisherman combined with Callahan does not render claims 1, 5, 6, 7, or 9 obvious

The Petition fails to show that a POSITA would have been motivated to use the lighting circuit in Fisherman with the LED light sources of Callahan. Pet. at 38-39; EX1013 at 87 ¶ 3. Petitioner's expert contends "the combination would be a

predictable combination of elements disclosed in the prior art." EX1013 at 87 ¶ 4. Petitioner's expert further contends that a "POSA would be motivated to take advantage of Callahan's LED light sources when implementing the Fisherman lighting circuit." *Id.*

However, much like the deficiencies in Grounds 2 and 3, neither the Petition nor Petitioner's expert explain why a POSITA would have expected to successfully incorporate Callahan's LED in Fisherman's circuit from 1956. EX2002 ¶ 81. The lighting circuit in Fisherman relies on features, such as bi-metallic strips, specifically designed to accommodate the linear and self-regulating resistance properties of incandescent bulbs. EX1008 at 1:36–44; EX2002 ¶ 81. In contrast, LEDs, like the ones disclosed in Callahan, require precise current regulation and do not exhibit inherent resistance present in the incandescent bulbs used with the lighting circuit in Fisherman, making substitution impractical without significant redesign of the circuit. EX1009 at [0025]. Again, LEDs have a very different current vs. voltage characteristic than incandescent bulbs. EX2002 ¶ 81. LED lights do not have resistance like an incandescent bulb. LED lights have an exponential current vs. voltage relationship (described by the Shockley diode equation) rather than a linear current vs. voltage relationship as found in a simple resistance. *Id.*

Moreover, as discussed above, decorative incandescent light strings continue to sell to this day because of their illumination appearance. EX2007 and EX2008 (articles showing users' preferences for incandescent decorative lights despite availability of LEDs). A POSITA would not be motivated to replace an incandescent light bulb with an LED as incandescent light sources still have a place in decorative lighting, compared to other industries, both lighting and non-lighting. EX2002 ¶ 82.

A POSITA would not have a reasonable expectation that use of the shunt in Fisherman's circuit would be successful for use with the LED disclosed in Callahan. EX2002 ¶ 83. Resistance is very different in LEDs than incandescent bulbs. *Id.* As mentioned above, LED lights have an exponential current vs. voltage relationship rather than a linear current vs. voltage relationship as found in a simple resistance, such as seen in an incandescent bulb.

Fisherman's shunt is designed for incandescent bulbs, relying on their linear resistance and thermal regulation to handle current. EX1008 at 2:22-29; EX2002 ¶ 85. As previously discussed, LEDs, require current regulation and lack the thermal-driven resistance increase seen in incandescent bulbs, making Fisherman's shunt unsuitable for protecting LEDs from overcurrent. EX1009 at [0025].

E. Ground 5: combining Inoue with Holler is non-obvious

Claims 2, 3, 4, 5, 6, 7, and 8 depend from claim 1. EX1001 at 13:51-63. The Petition contends it would have been obvious to a POSITA to combine use of the circuit configuration disclosed in Inoue with the LED light disclosed in Smith, to satisfy the additional limitations found in dependent claims 2, 3, 4, 5, 6 and 8. Pet. at 46; EX1013 at 98-108. Petitioner's expert identifies the same alleged bypass resistor R13 in Fig. 3 of Inoue as satisfying claim 1's requirement of a "resistor bypass circuit for a series lighting circuit," that was relied upon in Ground 1. EX1013 at 100-101; *see also* EX1013 at 48-49 (Ground 1). Petitioner's expert does not rely on any of the disclosures of Smith to satisfying the underlying limitations of claim 1.

However, Inoue fails to disclose a "resistor bypass circuit," as required by claims 1 and 9, as explained above regarding Ground 1. EX2002 ¶ 87. Inoue does not anticipate claim of the '252 patent because Inoue lacks the claimed "resistor bypass circuit for a series lighting circuit". *Id.* The proposed combination of Inoue and Smith fails to render obvious dependent claims 2, 3, 4, 5, 6, 7, and 8. *Id.*

Like claim 1, independent claim 9 requires a "resistor bypass circuit for a series lighting circuit comprising … conducting current at all times when current is flowing through the circuit regardless of whether the LED light sources are

conducting current therethrough". EX1001 at 13:52-60 and 14:26-35. Claim 9 additionally requires a "LED flashing light source which includes a flashing circuit". However, the Petitioner's proposed combination of Inoue and Smith fails to render obvious claim 9 for the same reasons that Inoue fails to anticipate claim 1 -- Inoue fails to disclose a resistor bypass that continues to conduct electricity and remaining lights lit, even when one more individual lighting elements in the series are burned out. EX2002 ¶ 88. Please see above section V(A) in response to Ground 1, and why Inoue does not anticipate claim of the '252 patent.

Inoue discloses "shunt sections that are connected in parallel to at least one of the serial circuits and shunts current when a voltage higher than rated voltages of the light sources is applied" to the circuit. EX1004 at [0011]. The luminance level of the LEDs vary in accordance with a change in a voltage value. EX1003 at [0005]. Inoue does not disclose that LED2 in Figure 3 will remain lit if LED1 burns out, stops carrying current, is lose, or is missing/removed, and that all current will flow through the bypass containing R12. EX2002 ¶ 89. Inoue teaches how to uses R12 and R13 to change the luminance in response to an increased or decreased the power voltage level. EX1003 at [0034]. Therefore, Inoue also does not teach the resistor bypass required by claim 9. EX2002 ¶ 89.

F. Ground 6: Holler combined with Callahan does not render claims 10, 11, 12, 13 or 14 obvious

The Petition contends it would have been obvious to a POSITA to combine the circuit configuration disclosed in Holler with the LED light disclosed in Callahan, to satisfy the limitations of claims 10, 11, 12, 13 and 14. Pet. at 56-57; EX1013 at 111-128. But the Petition offers no explanation why a POSITA would have been motivated to do so, given the significant technological difference between LEDs and incandescent bulbs.

Plaintiff's expert contends a POSITA would have been motivated to use the drive circuit in Holler with the LED light source in Callahan. EX1013 at 112-113, 122 (discussing Holler's circuit as satisfying the "bypass circuit" in independent claims 1 and 10), and at 111-112, 114, 122 (discussing motivation to combine Callahan's LED with Holler's circuit). The Petition, however, does not offer a proposal for how a POSITA would have addressed the technological differences between LEDs and incandescent bulbs. EX2002 ¶ 91. Plaintiff's expert contends a POSITA would have been "motivated to implement Hollers's series lighting circuit, including the bypass resistors, by using Callahan's LED light sources, thereby conserving electrical power, attaining greater reliability, and attaining a high degree of lighting control that includes, color, brightness, and blink rate." EX1013 at 112

¶ 3. Plaintiff's expert further contends that the combination of Holler and Smith "would be a predictable combination of elements disclosed in the prior art." Id. ¶ 4.

As discussed above, LEDs have a very different voltage characteristic than incandescent bulbs. EX2002 ¶ 92. LED lights do not have resistance like an incandescent bulb. *Id.* As explained above, LED lights have an exponential current vs. voltage relationship (described by the Shockley diode equation) rather than a linear current vs. voltage relationship as found in a simple resistance, such as seen in an incandescent bulb. *Id.* As previously discussed, the bypass circuit in Holler is designed for incandescent bulbs, which tolerate voltage fluctuations and rely on thermal resistance changes for current regulation. EX1004 at 1:96–101. LEDs, like the ones in Callahan, require current regulation and lack the thermal-driven resistance increase seen in incandescent bulbs, making the bypass circuit in Holler unsuitable for protecting LEDs from overcurrent. EX1009 at [0025].

G. Ground 7: Yu does not constitute prior art

The Board has previously found antedating prior art references is sufficient grounds for denying *inter partes* review. *LG Elecs., Inc. v. Wi-LAN Inc.*, No. IPR2018-00704, Paper No. 14 at 20 (PTAB Sept. 5, 2018) ("[W]e determine that Patent Owner has provided sufficient evidence to antedate ZTE . . . [and therefore] Petitioner has not demonstrated a reasonable likelihood of prevailing[.]").

Yu was made of record before the examiner during prosecution of the ’252 patent. EX1001, References Cited. Yu, however, does not qualify as prior art under 35 U.S.C. § 102(e) (pre-AIA) because the “date of invention” for the ’252 patent predates the July 31, 2006, filing date of Yu.

Patent Owner submitted the declarations of Steven Altamura, the inventor, during prosecution of the ’252 patent and its continuation U.S. 11,533,794, describing how he documented conception of the invention and then built a working prototype in order to show it to a customer. EX1002 at 122-23 ¶¶ 2, 7; EX2005 ¶¶ 2, 7.

Mr. Altamura’s declarations establish diligence in the filing of the application following conception. However, his actual reduction to practice—before Yu’s filing date—renders irrelevant the issue of reasonable diligence. *Shindlear v. Holdeman*, 628 F.2d 1337, 1341 (C.C.P.A. 1980); *Paulik v. Rizkalla*, 760 F. 2d 1270, 1273 (Fed. Cir. 1985). Because the Altamura declarations establish a reduction to practice before Yu’s filing date, Yu is removed as reference that could sustain the Petition’s request for cancellation.

1. Legal Standard

A reference is prior art only if filed before the date of "the invention by the [patent owner]." 35 U.S.C. § 102(e) (pre-AIA). *See, e.g.*, *Sequenom v. Leland*

Stanford Junior Univ., No. IPR2013-00390, at 5 (PTAB Nov. 25, 2014). A patent owner may antedate an asserted prior art patent by showing conception of the claimed invention prior to the critical date and either actual reduction to practice prior to the critical date **or** "reasonably continuous diligence" in reducing the invention to practice until its effective filing date. *Medtronic, Inc. v. Teleflex Innov. S.À.R.L.*, 68 F.4th 1298, 1303 (Fed. 2023).

To establish actual reduction to practice before the critical date, it must have been shown that "(1) [the inventors] constructed an embodiment or performed a process that met all the limitations of the [claimed invention]; and (2) [the inventors] determined that the invention would work for its intended purpose." *Id.,* quoting *Cooper v. Goldfarb*, 154 F.3d 1321, 1327 (Fed. Cir. 1998). Inventor testimony may serve as evidence of reduction to practice, but it must be corroborated by independent evidence. *Medtronic*, 68 F.4th at 1307; *Perfect Surgical Techniques, Inc. v. Olympus Am., Inc.*, 841 F.3d 1004, 1009 (Fed. Cir. 2016).

In an IPR, the petitioner bears the ultimate burden of persuasion on invalidity, which never shifts to the patent owner. *Medtronic*, 68 F.4th at 1303, citing *Dynamic Drinkware, LLC v. Nat'l Graphics, Inc.*, 800 F.3d 1375, 1378-79 (Fed. Cir. 2015). When a patent owner seeks to antedate an asserted prior art reference, the patent

owner takes on a temporary burden of production. *Id.* Once that burden is met, the burden shifts back to the petitioner. *Id.*

Moreover, the "law does not impose an impossible standard of `independence' on corroborative evidence by requiring that every point of a reduction to practice be corroborated by evidence having a source totally independent of the inventor; indeed, such a standard is the antithesis of the rule of reason." *Medtronic,* 68 F.4th at 1307, quoting *Knorr v. Pearson*, 671 F.2d 1368, 1374 (C.C.P.A. 1982).

2. The Inventor Reduced the Claimed Invention to Practice Before the July 2006 Critical Date of Yu

Here, the '252 patent claims priority to Provisional Application No. 62/876,868, filed on December 22, 2006, after the July 31, 2006, critical date for Yu. EX2004. Patent Owner submitted the declaration of Steven Altamura, inventor of the '252 patent, during prosecution in 2020, describing conception and reduction to practice before July 31, 2006. EX1002 at 122-23 ¶¶ 2, 7.

Petitioner contends that the Altamura declaration submitted during prosecution of the '252 patent lacked the exhibits. Pet. at 71. Patent Owner does not agree. However, a revised declaration from Mr. Altamura was submitted by Patent Owner during subsequent prosecution of U.S. 11,533,794, a continuation of the '252 patent. EX2005.

Mr. Altamura's declaration describes how he built a functioning prototype of the invention at least as early as January 15, 2006, in order to have it reviewed by a customer. *Id.* ¶¶ 2, 7. The exhibits are unquestionably attached to the revised declaration. *Id.*

Exhibits A, B, C, and D to the declaration documents Mr. Altamura's conception of the invention. EX2005 ¶ 7. Exhibit A is his first documentation of the invention and is dated January 12, 2006. *Id.* ¶ 6. Mr. Altamura documented in writing further refinements of the bypass concept on January 31, 2006, and February 27, 2006, as shown by Exhibits B, C, and D. *Id.* ¶ 7. Mr. Altamura built the prototype of the invention shown in his drawings "at least as early as 15 Jan 2006, in order to have it reviewed by a customer." EX2005 ¶ 7.

Here, Mr. Altamura's declaration testimony regarding reduction to practice is sufficiently corroborated under the rule of reason standard. Making and using the invention to show to a customer establishes that the invention worked for its intended purpose and provides independent corroboration sufficient to carry Patent Owner's burden of production.

Petitioner's argument against giving the Altamura declarations weight essentially boils down to that the Examiner would not have considered the declarations during prosecution because they were unsolicited and without reference

to a specific prior art rejection. Pet. 71. But just because the Examiner did or did not consider them during prosecution, the declarations stand on their own as evidence of conception and reduction to practice of the invention. Patent Owner has established its burden of production to remove Yu from consideration as prior art. Petitioner was aware of Mr. Altamura's declarations before filing the Petition, and offer no rebuttal in the Petition. Because Patent Owner has offered unrebutted evidence of a prior invention eliminating Yu as prior art, Petitioner has failed to show a reasonable probability that the claims are unpatentable based on Yu.

H. Grounds 2-7: The Petition Should Be Denied Because Petitioner Failed to Address Compelling Objective Evidence of Non-Obviousness that Petitioner Was Aware Of

Grounds 2-7 also fail for at least one additional reason: well before filing this Petition, Petitioner was aware of compelling, substantial objective evidence of non-obviousness regarding the Challenged Claims, including Patent Owner's and Petitioner's own commercial success, as well as long-felt need for the invention. Such objective evidence of non-obviousness "may often be the most probative and cogent evidence in the record." *Transocean Offshore Deepwater Drilling, Inc. v. Maersk Drilling USA, Inc.*, 699 F.3d 1340, 1349 (Fed. Cir. 2012). Indeed, it is error to not consider objective evidence. *In re Cyclobenzaprine Hydrochloride Extended-Release Capsule Patent Litig.*, 676 F.3d 1063, 1075-80 (Fed. Cir. 2012).

Petitioner strategically chose not to address this evidence in its Petition, instead claiming that "Petitioner has studied the prosecution history of the application of the '252 patent. Petitioner is not aware of any assertion of objective indicia of non-obviousness that was made during the prosecution of the application." Pet. at 71. What Petitioner fails to mention is that Patent Owner asserted objective evidence of non-obviousness supported patentability of the Challenged Claims during district court litigation between Patent Owner and Petition concerning the '252 patent.

As Petitioner correctly acknowledged, the '252 patent is asserted against Petitioner in *Seasonal Specialties, LLC v. LEDup Mfg. Group Ltd.*, 2:23-cv-06318 (C.D. Cal.), filed on August 3, 2023 ("the Litigation"). Pet. 73. In the Litigation, Patent Owner contends that Petitioner's Light String products infringe claims 2, 3, 4, 8, and 10 of the '252 patent. EX2010 ¶ 49, 90 & Exhibit I.

In the Litigation, Petitioner served interrogatories on Patent Owner asking "[f]or each Claims-in-Suit [claims 2, 3, 4, 8, and 10 of the '252 patent] that the Preliminary Invalidity Contentions assert would have been obvious in light of the cited prior art, provide the factual basis for any counter-contention that it would have been non-obvious in light of the cited prior art including a description of any

evidence and documents related to Second Considerations that You assert exist." EX2011, Interrogatory No. 4.

Patent Owner responded to Interrogatory No. 4, identifying objective evidence of commercial success, and long felt need as supporting non-obviousness of the asserted claims. EX2011 at 18-19. The section addressing commercial success identified Patent Owner's own "products practicing the Resistive Bypass Patents have been commercially successful due to inclusion of the patented invention. Other companies, including at least [Petitioner] LEDup and Inliten, have incorporated the Resistive Bypass invention into their competing decorative lighting products, and have also enjoyed commercial success due to inclusion of the invention." *Id.*

The section addressing long-felt need identified problems remaining with circuit bypasses, despite earlier circuit bypasses, such as the solid state bypass circuit disclosed in Gershen. EX2011 at 19. Patent Owner's interrogatory answer disclosed that Patent Owner's engineers developed an improved circuit bypass that addresses problems in bypass circuits including a reduction in the cost, complexity, and size of the solid state bypass circuits. *Id.* The invention claimed in the '252 patent permits serially-connected LED lights to remain lit, after one or more bulbs become defective, burnt out, loose, or removed, by conducting current at all times when

current is flowing through the circuit, regardless of whether the LED light sources are conducting current therethrough. *Id.*

Petitioner's statement that it is "unaware of an assertion of objective indicia of non-obviousness" is obscured by Petitioner's qualification "made during prosecution of the application." Pet. at 71. Petitioner was plainly aware of Patent Owner's assertion of objective indicia of non-obviousness from the Litigation. And objective evidence of non-obviousness need not be limited to evidence found in the prosecution history.

The Board has been clear—"known evidence of secondary considerations should be addressed in the Petition." *Robert Bosch Tool Corp. v. SD3, LLC*, IPR2016-01753, Paper 15 at 27–30 (PTAB Mar. 22, 2017). When a petitioner fails to address known objective evidence of nonobviousness in its petition, particularly when the failure to do so is a strategic decision, it forces the Board to make a decision without the ability to consider the full scope of evidence material to patentability that is known to the parties. For this reason, the Board frequently finds that failure to address known objective indicia weighs strongly in favor of denial of review, let alone patentability. The Board should do the same here. *E.g., Robert Bosch Tool Corp.*, IPR2016-01753, Paper 15 at 27–30 (denying institution for failure to address objective indicia of nonobviousness introduced in a prior ITC proceeding to which

the petitioner was party); *Stryker Corp. v. KFx Medical, LLC,* IPR2019-00817, Paper 10 at 29 (PTAB Sept. 16, 2019) (denying institution and noting that "Petitioner's failure to address the known evidence of secondary considerations [from district court litigation] further weighs in favor of denying institution."); *Gilead Scis., Inc. v. United States*, IPR2019-01453, Paper 14 at 28–29 (PTAB Feb. 20, 2020); *Gilead Scis., Inc. v. United States*, IPR2019-01455, Paper 16 at 52 (PTAB Feb. 5, 2020); *Coalition for Affordable Drugs V LLC v. Hoffman-LaRoche Inc.*, IPR2015-01792, Paper 14 at 17–18 (PTAB Mar. 11, 2016); *Merial Ltd. v. Virbac*, IPR2014-01279, Paper 13 at 26–27 (PTAB Jan. 22, 2015).

1. Commercial Success

Commercial success can be strong evidence of non-obviousness. Moreover, commercial success is presumed when a patentee shows "significant sales in a relevant market, and that the successful product is the invention disclosed and claimed in the patent." *Ecolochem, Inc. v. S. Cal. Edison Co*., 227 F.3d 1361, 1377 (Fed. Cir. 2000); *see also Polaris Indus. v. Arctic Cat, Inc.*, 882 F.3d 1056, 1072 (Fed. Cir. 2018).

Here, Petitioner knew from Patent Owner's interrogatory answer in the Litigation that Patent Owner's products are covered by the Challenged Claims. EX2011, Answer Interrogatory No. 4. Patent Owner's district court complaint

against Petitioner also alleged that Patent Owner "promotes the advantages of the ['252 patent] in packaging and descriptive materials for products practicing the claims of the ['252 patent]." EX2010 ¶ 37. Patent Owner's complaint also attached claim charts showing how Petitioner's own products practice the claims of the '252 patent. *Id.*, Ex. I. Patent Owner identified Petitioner's infringing products as evidence of commercial success of products practicing the claimed invention.

Patent Owner produced in discovery to Petitioner product packaging for Patent Owner's products practicing the '252 patent and marked with the patent's number. Examples of those product packaging are EX2012-2017.

Patent Owner's product packaging prominently displays the "Remains Lit" branding, indicating that "even if one or more bulbs are … burnt out, loose, broken, or missing," that the bulbs will "remain lit." *Id.* Petitioner cannot credibly say it was not fully aware of the commercial success of the claim invention before it filed its Petition.

Because the evidence shows that the Patent Owner's products embody the challenged claims and is coextensive with them, commercial success is presumed. *E.g., Polaris*, 882 F.3d at 1072. The Board has been clear: "known evidence of secondary considerations should be addressed in the Petition." *E.g., Robert Bosch Tool Corp.*, IPR2016-01753, Paper 15 at 28. Here, Petitioner knew about the Patent

Owner's commercial success, yet chose not to even try to address it. This factor weighs strongly in favor of denying the Petition.

2. Long Felt Need

"Long-felt need" is also strong objective evidence that an invention is nonobvious. *WBIP, LLC v. Kohler Co.*, 829 F.3d 1317, 1332 (Fed. Cir. 2016) ("Evidence of a long felt but unresolved need tends to show non-obviousness because it is reasonable to infer that the need would have not persisted had the solution been obvious.").

Again, Petitioner was aware of evidence of long-felt need before it filed the Petition on August 2, 2024. As Patent Owner had explained in detail in its June 24, 2024, interrogatory answer, that Patent Owner's products solved a long felt problems remaining with circuit bypasses, despite earlier circuit bypasses, such as the solid state bypass circuit disclosed in Gershen. EX2011 at 19.

The solid state bypass circuit in Gershen creates no voltage load on the circuit, until engaged when a bulb in the circuit fails. When engaged, the bypass circuits like those described in Gershen provide insufficient resistance to that portion of the circuit bypassed. If enough bulbs fail, the circuit current will increase causing early failure of the remaining bulbs as too much current flows through the remaining bulbs, overheating them and causing them to prematurely fail.

The invention claimed in the ’252 patent permits serially-connected LED lights to remain lit, after one or more bulbs become defective, burnt out, loose, or removed, by conducting current at all times when current is flowing through the circuit, regardless of whether the LED light sources are conducting current therethrough. EX2011 at 19.

Petitioner’s deliberate decision to ignore this clear and clearly-explained evidence weighs strongly in favor of denying the Petition.

VI. Conclusion

For the reasons, Patent Owner respectfully requests the Board deny the Petition for *Inter Partes Review* of the Challenged Claims.

Dated: May 15, 2025

/*Joseph M. Kuo*/
Joseph M. Kuo (Reg. No. 38,943)
(Lead Counsel)
SAUL EWING LLP
161 N. Clark Street, Suite 4200
Chicago, Illinois 60601
Telephone: (312) 876-7100
Facsimile: (312) 876-0288
joseph.kuo@saul.com

Brian Landry (Reg. No. 52,074)
(Back-Up Counsel)
SAUL EWING LLP
131 Dartmouth Street, Suite 501
Boston, MA 02116
Telephone: (617) 723-3300
Facsimile: (617) 723-4151
brian.landry@saul.com

Courtland C. Merrill (Pro Hac Vice)
Saul Ewing LLP
33 South Sixth Street, Suite 4750
Minneapolis, MN 55402
Tel: (612) 225-2949
courtland.merrill@saul.com

Counsel for Patent Owner

CERTIFICATION OF WORD COUNT UNDER 37 C.F.R. § 42.6(D)

The undersigned hereby certifies that the foregoing complies with the type-volume limitation in 37 C.F.R. § 42.24(b)(1). According to the word-processing system's word count, the document contains 8,682 words, excluding the parts of the brief exempted by 37 C.F.R § 42.24(b).

/*Joseph M. Kuo*/
Joseph M. Kuo

CERTIFICATE OF SERVICE

Pursuant to 37 C.F.R. § 42.6(e) and the agreement of the parties, the undersigned certifies that on May 15, 2025, a true and correct copy of the foregoing **Patent Owner Response** was served by filing through the Patent Trial and Appeal Board End to End (PTAB E2E), as well as providing a courtesy copy via e-mail to the following attorneys of record for Petitioner listed below:

William W. Cochran (Reg. No. 26,652)
Christopher P. Whitham (Reg. No. 53,769)
Bridget A. Cochran (Reg. No. 64,599)
Cochran Freund & Young LLC
2026 Caribou Drive, Suite 201
Fort Collins, CO 80525
(970) 492-1100
billc@patentlegal.com
chrisw@patentlegal.com
bridgetc@patentlegal.com

/Joseph M. Kuo/
Joseph M. Kuo