PTO/AIA/14 (02-18)
Approved for use through 11/30/2020. OMB 0651-0032
U.S. Patent and Trademark Office; U.S. DEPARTMENT OF COMMERCE
Under the Paperwork Reduction Act of 1995, no persons are required to respond to a collection of information unless it contains a valid OMB control number.

Application Data Sheet 37 CFR 1.76	Attorney Docket Number	40617.0493USC4
	Application Number	
Title of Invention	RESISTIVE BYPASS FOR SERIES LIGHTING CIRCUIT	

The application data sheet is part of the provisional or nonprovisional application for which it is being submitted. The following form contains the bibliographic data arranged in a format specified by the United States Patent and Trademark Office as outlined in 37 CFR 1.76.
This document may be completed electronically and submitted to the Office in electronic format using the Electronic Filing System (EFS) or the document may be printed and included in a paper filed application.

Secrecy Order 37 CFR 5.2:

☐ Portions or **all** of the application associated with this Application Data Sheet may fall under a Secrecy Order pursuant to 37 CFR 5.2 (Paper filers only. Applications that fall under Secrecy Order may not be filed electronically.)

Inventor Information:

Inventor 1 Remove

Legal Name

Prefix	Given Name	Middle Name	Family Name	Suffix
	Steven	J.	Altamura	

Residence Information (Select One) ● US Residency Non US Residency Active US Military Service

City	Scarsdale	State/Province	NY	Country of Residence i	US

Mailing Address of Inventor:

Address 1	14 Elba Place		
Address 2			
City	Scarsdale	**State/Province**	NY
Postal Code	10583	**Country** i	US

All Inventors Must Be Listed - Additional Inventor Information blocks may be generated within this form by selecting the **Add** button. Add

Correspondence Information:

Enter either Customer Number or complete the Correspondence Information section below.
For further information see 37 CFR 1.33(a).

☐ **An Address is being provided for the correspondence Information of this application.**

Customer Number	52835		
Email Address		Add Email	Remove Email

Application Information:

Title of the Invention	RESISTIVE BYPASS FOR SERIES LIGHTING CIRCUIT		
Attorney Docket Number	40617.0493USC4	**Small Entity Status Claimed**	☒
Application Type	Nonprovisional		
Subject Matter	Utility		
Total Number of Drawing Sheets (if any)	15	**Suggested Figure for Publication (if any)**	

Under the Paperwork Reduction Act of 1995, no persons are required to respond to a collection of information unless it contains a valid OMB control number.

Application Data Sheet 37 CFR 1.76	Attorney Docket Number	40617.0493USC4
	Application Number	
Title of Invention	RESISTIVE BYPASS FOR SERIES LIGHTING CIRCUIT	

Filing By Reference:

Only complete this section when filing an application by reference under 35 U.S.C. 111(c) and 37 CFR 1.57(a). Do not complete this section if application papers including a specification and any drawings are being filed. Any domestic benefit or foreign priority information must be provided in the appropriate section(s) below (i.e., "Domestic Benefit/National Stage Information" and "Foreign Priority Information").

For the purposes of a filing date under 37 CFR 1.53(b), the description and any drawings of the present application are replaced by this reference to the previously filed application, subject to conditions and requirements of 37 CFR 1.57(a).

Application number of the previously filed application	Filing date (YYYY-MM-DD)	Intellectual Property Authority or Country

Publication Information:

☐ Request Early Publication (Fee required at time of Request 37 CFR 1.219)

☐ **Request Not to Publish.** I hereby request that the attached application not be published under 35 U.S.C. 122(b) and certify that the invention disclosed in the attached application **has not and will not** be the subject of an application filed in another country, or under a multilateral international agreement, that requires publication at eighteen months after filing.

Representative Information:

Representative information should be provided for all practitioners having a power of attorney in the application. Providing this information in the Application Data Sheet does not constitute a power of attorney in the application (see 37 CFR 1.32).
Either enter Customer Number or complete the Representative Name section below. If both sections are completed the customer Number will be used for the Representative Information during processing.

Please Select One:	● Customer Number	US Patent Practitioner	○ Limited Recognition (37 CFR 11.9)
Customer Number	52835		

Domestic Benefit/National Stage Information:

This section allows for the applicant to either claim benefit under 35 U.S.C. 119(e), 120, 121, 365(c), or 386(c) or indicate National Stage entry from a PCT application. Providing benefit claim information in the Application Data Sheet constitutes the specific reference required by 35 U.S.C. 119(e) or 120, and 37 CFR 1.78.
When referring to the current application, please leave the "Application Number" field blank.

Prior Application Status			Remove
Application Number	Continuity Type	Prior Application Number	Filing or 371(c) Date (YYYY-MM-DD)
	Continuation of	15899264	2018-02-19

Under the Paperwork Reduction Act of 1995, no persons are required to respond to a collection of information unless it contains a valid OMB control number.

Application Data Sheet 37 CFR 1.76	Attorney Docket Number	40617.0493USC4
	Application Number	
Title of Invention	RESISTIVE BYPASS FOR SERIES LIGHTING CIRCUIT	

Prior Application Status	Patented				Remove
Application Number	Continuity Type	Prior Application Number	Filing Date (YYYY-MM-DD)	Patent Number	Issue Date (YYYY-MM-DD)
15899264	Continuation of	14840705	2015-08-31	9900968	2018-02-20
Prior Application Status	Abandoned				Remove
Application Number	Continuity Type	Prior Application Number	Filing or 371(c) Date (YYYY-MM-DD)		
14840705	Continuation of	14052124	2013-10-11		
Prior Application Status	Abandoned				Remove
Application Number	Continuity Type	Prior Application Number	Filing or 371(c) Date (YYYY-MM-DD)		
14052124	Continuation of	12947488	2010-11-16		
Prior Application Status	Patented				Remove
Application Number	Continuity Type	Prior Application Number	Filing Date (YYYY-MM-DD)	Patent Number	Issue Date (YYYY-MM-DD)
12947488	Division of	11962964	2007-12-21	7851981	2010-12-14
Prior Application Status	Expired				Remove
Application Number	Continuity Type	Prior Application Number	Filing or 371(c) Date (YYYY-MM-DD)		
11962964	Claims benefit of provisional	60876868	2006-12-22		

Additional Domestic Benefit/National Stage Data may be generated within this form by selecting the **Add** button. Add

Foreign Priority Information:

This section allows for the applicant to claim priority to a foreign application. Providing this information in the application data sheet constitutes the claim for priority as required by 35 U.S.C. 119(b) and 37 CFR 1.55. When priority is claimed to a foreign application that is eligible for retrieval under the priority document exchange program (PDX)[i] the information will be used by the Office to automatically attempt retrieval pursuant to 37 CFR 1.55(i)(1) and (2). Under the PDX program, applicant bears the ultimate responsibility for ensuring that a copy of the foreign application is received by the Office from the participating foreign intellectual property office, or a certified copy of the foreign priority application is filed, within the time period specified in 37 CFR 1.55(g)(1).

Remove

Application Number	Country[i]	Filing Date (YYYY-MM-DD)	Access Code[i] (if applicable)

Additional Foreign Priority Data may be generated within this form by selecting the **Add** button. Add

Under the Paperwork Reduction Act of 1995, no persons are required to respond to a collection of information unless it contains a valid OMB control number.

Application Data Sheet 37 CFR 1.76	Attorney Docket Number	40617.0493USC4
	Application Number	
Title of Invention	RESISTIVE BYPASS FOR SERIES LIGHTING CIRCUIT	

Statement under 37 CFR 1.55 or 1.78 for AIA (First Inventor to File) Transition Applications

☐ This application (1) claims priority to or the benefit of an application filed before March 16, 2013 and (2) also contains, or contained at any time, a claim to a claimed invention that has an effective filing date on or after March 16, 2013.
NOTE: By providing this statement under 37 CFR 1.55 or 1.78, this application, with a filing date on or after March 16, 2013, will be examined under the first inventor to file provisions of the AIA.

Application Data Sheet 37 CFR 1.76	Attorney Docket Number	40617.0493USC4
	Application Number	
Title of Invention	RESISTIVE BYPASS FOR SERIES LIGHTING CIRCUIT	

Authorization or Opt-Out of Authorization to Permit Access:

When this Application Data Sheet is properly signed and filed with the application, applicant has provided written authority to permit a participating foreign intellectual property (IP) office access to the instant application-as-filed (see paragraph A in subsection 1 below) and the European Patent Office (EPO) access to any search results from the instant application (see paragraph B in subsection 1 below).

Should applicant choose not to provide an authorization identified in subsection 1 below, applicant **must opt-out** of the authorization by checking the corresponding box A or B or both in subsection 2 below.

NOTE: This section of the Application Data Sheet is **ONLY** reviewed and processed with the **INITIAL** filing of an application. After the initial filing of an application, an Application Data Sheet cannot be used to provide or rescind authorization for access by a foreign IP office(s). Instead, Form PTO/SB/39 or PTO/SB/69 must be used as appropriate.

1. Authorization to Permit Access by a Foreign Intellectual Property Office(s)

A. Priority Document Exchange (PDX) - Unless box A in subsection 2 (opt-out of authorization) is checked, the undersigned hereby **grants the USPTO authority** to provide the European Patent Office (EPO), the Japan Patent Office (JPO), the Korean Intellectual Property Office (KIPO), the State Intellectual Property Office of the People's Republic of China (SIPO), the World Intellectual Property Organization (WIPO), and any other foreign intellectual property office participating with the USPTO in a bilateral or multilateral priority document exchange agreement in which a foreign application claiming priority to the instant patent application is filed, access to: (1) the instant patent application-as-filed and its related bibliographic data, (2) any foreign or domestic application to which priority or benefit is claimed by the instant application and its related bibliographic data, and (3) the date of filing of this Authorization. See 37 CFR 1.14(h)(1).

B. Search Results from U.S. Application to EPO - Unless box B in subsection 2 (opt-out of authorization) is checked, the undersigned hereby **grants the USPTO authority** to provide the EPO access to the bibliographic data and search results from the instant patent application when a European patent application claiming priority to the instant patent application is filed. See 37 CFR 1.14(h)(2).

The applicant is reminded that the EPO's Rule 141(1) EPC (European Patent Convention) requires applicants to submit a copy of search results from the instant application without delay in a European patent application that claims priority to the instant application.

2. Opt-Out of Authorizations to Permit Access by a Foreign Intellectual Property Office(s)

☐ A. Applicant **DOES NOT** authorize the USPTO to permit a participating foreign IP office access to the instant application-as-filed. If this box is checked, the USPTO will not be providing a participating foreign IP office with any documents and information identified in subsection 1A above.

☐ B. Applicant **DOES NOT** authorize the USPTO to transmit to the EPO any search results from the instant patent application. If this box is checked, the USPTO will not be providing the EPO with search results from the instant application.

NOTE: Once the application has published or is otherwise publicly available, the USPTO may provide access to the application in accordance with 37 CFR 1.14.

Under the Paperwork Reduction Act of 1995, no persons are required to respond to a collection of information unless it contains a valid OMB control number.

Application Data Sheet 37 CFR 1.76	Attorney Docket Number	40617.0493USC4
	Application Number	
Title of Invention	RESISTIVE BYPASS FOR SERIES LIGHTING CIRCUIT	

Applicant Information:

Providing assignment information in this section does not substitute for compliance with any requirement of part 3 of Title 37 of CFR to have an assignment recorded by the Office.

Applicant 1 Remove

If the applicant is the inventor (or the remaining joint inventor or inventors under 37 CFR 1.45), this section should not be completed. The information to be provided in this section is the name and address of the legal representative who is the applicant under 37 CFR 1.43; or the name and address of the assignee, person to whom the inventor is under an obligation to assign the invention, or person who otherwise shows sufficient proprietary interest in the matter who is the applicant under 37 CFR 1.46. If the applicant is an applicant under 37 CFR 1.46 (assignee, person to whom the inventor is obligated to assign, or person who otherwise shows sufficient proprietary interest) together with one or more joint inventors, then the joint inventor or inventors who are also the applicant should be identified in this section.

Clear

● Assignee	Legal Representative under 35 U.S.C. 117	Joint Inventor
Person to whom the inventor is obligated to assign.	Person who shows sufficient proprietary interest	

If applicant is the legal representative, indicate the authority to file the patent application, the inventor is:

Name of the Deceased or Legally Incapacitated Inventor:

If the Applicant is an Organization check here. ☒

Organization Name	Seasonal Specialties, LLC		
Mailing Address Information For Applicant:			
Address 1	11455 Valley View Road		
Address 2			
City	Eden Prairie	**State/Province**	MN
Country	US	Postal Code	55344
Phone Number		Fax Number	
Email Address			

Additional Applicant Data may be generated within this form by selecting the Add button. Add

Assignee Information including Non-Applicant Assignee Information:

Providing assignment information in this section does not substitute for compliance with any requirement of part 3 of Title 37 of CFR to have an assignment recorded by the Office.

Under the Paperwork Reduction Act of 1995, no persons are required to respond to a collection of information unless it contains a valid OMB control number.

Application Data Sheet 37 CFR 1.76	Attorney Docket Number	40617.0493USC4
	Application Number	
Title of Invention	RESISTIVE BYPASS FOR SERIES LIGHTING CIRCUIT	

Assignee 1

Complete this section if assignee information, including non-applicant assignee information, is desired to be included on the patent application publication. An assignee-applicant identified in the "Applicant Information" section will appear on the patent application publication as an applicant. For an assignee-applicant, complete this section only if identification as an assignee is also desired on the patent application publication.

Remove

If the Assignee or Non-Applicant Assignee is an Organization check here. ☐

Prefix	**Given Name**	Middle Name	**Family Name**	Suffix

Mailing Address Information For Assignee including Non-Applicant Assignee:

Address 1			
Address 2			
City		**State/Province**	
Country i		Postal Code	
Phone Number		Fax Number	
Email Address			

Additional Assignee or Non-Applicant Assignee Data may be generated within this form by selecting the Add button. Add

Signature:

Remove

NOTE: This Application Data Sheet must be signed in accordance with 37 CFR 1.33(b). **However, if this Application Data Sheet is submitted with the INITIAL filing of the application and either box A or B is not checked in subsection 2 of the "Authorization or Opt-Out of Authorization to Permit Access" section, then this form must also be signed in accordance with 37 CFR 1.14(c).**

This Application Data Sheet **must** be signed by a patent practitioner if one or more of the applicants is a **juristic entity** (e.g., corporation or association). If the applicant is two or more joint inventors, this form must be signed by a patent practitioner, **all** joint inventors who are the applicant, or one or more joint inventor-applicants who have been given power of attorney (e.g., see USPTO Form PTO/AIA/81) on behalf of **all** joint inventor-applicants.

See 37 CFR 1.4(d) for the manner of making signatures and certifications.

Signature	/Michael Lasky/			Date (YYYY-MM-DD)	2019-11-25
First Name	Michael B.	Last Name	Lasky	Registration Number	29555

Additional Signature may be generated within this form by selecting the Add button. Add

Under the Paperwork Reduction Act of 1995, no persons are required to respond to a collection of information unless it contains a valid OMB control number.

Application Data Sheet 37 CFR 1.76	Attorney Docket Number	40617.0493USC4
	Application Number	
Title of Invention	RESISTIVE BYPASS FOR SERIES LIGHTING CIRCUIT	

This collection of information is required by 37 CFR 1.76. The information is required to obtain or retain a benefit by the public which is to file (and by the USPTO to process) an application. Confidentiality is governed by 35 U.S.C. 122 and 37 CFR 1.14. This collection is estimated to take 23 minutes to complete, including gathering, preparing, and submitting the completed application data sheet form to the USPTO. Time will vary depending upon the individual case. Any comments on the amount of time you require to complete this form and/or suggestions for reducing this burden, should be sent to the Chief Information Officer, U.S. Patent and Trademark Office, U.S. Department of Commerce, P.O. Box 1450, Alexandria, VA 22313-1450. DO NOT SEND FEES OR COMPLETED FORMS TO THIS ADDRESS. **SEND TO: Commissioner for Patents, P.O. Box 1450, Alexandria, VA 22313-1450.**

Privacy Act Statement

The Privacy Act of 1974 (P.L. 93-579) requires that you be given certain information in connection with your submission of the attached form related to a patent application or patent. Accordingly, pursuant to the requirements of the Act, please be advised that: (1) the general authority for the collection of this information is 35 U.S.C. 2(b)(2); (2) furnishing of the information solicited is voluntary; and (3) the principal purpose for which the information is used by the U.S. Patent and Trademark Office is to process and/or examine your submission related to a patent application or patent. If you do not furnish the requested information, the U.S. Patent and Trademark Office may not be able to process and/or examine your submission, which may result in termination of proceedings or abandonment of the application or expiration of the patent.

The information provided by you in this form will be subject to the following routine uses:

1 The information on this form will be treated confidentially to the extent allowed under the Freedom of Information Act (5 U.S.C. 552) and the Privacy Act (5 U.S.C. 552a). Records from this system of records may be disclosed to the Department of Justice to determine whether the Freedom of Information Act requires disclosure of these records.

2. A record from this system of records may be disclosed, as a routine use, in the course of presenting evidence to a court, magistrate, or administrative tribunal, including disclosures to opposing counsel in the course of settlement negotiations.

3 A record in this system of records may be disclosed, as a routine use, to a Member of Congress submitting a request involving an individual, to whom the record pertains, when the individual has requested assistance from the Member with respect to the subject matter of the record.

4. A record in this system of records may be disclosed, as a routine use, to a contractor of the Agency having need for the information in order to perform a contract. Recipients of information shall be required to comply with the requirements of the Privacy Act of 1974, as amended, pursuant to 5 U.S.C. 552a(m).

5. A record related to an International Application filed under the Patent Cooperation Treaty in this system of records may be disclosed, as a routine use, to the International Bureau of the World Intellectual Property Organization, pursuant to the Patent CooperationTreaty.

6. A record in this system of records may be disclosed, as a routine use, to another federal agency for purposes of National Security review (35 U.S.C. 181) and for review pursuant to the Atomic Energy Act (42 U.S.C. 218(c)).

7. A record from this system of records may be disclosed, as a routine use, to the Administrator, General Services, or his/her designee, during an inspection of records conducted by GSA as part of that agency's responsibility to recommend improvements in records management practices and programs, under authority of 44 U.S.C. 2904 and 2906. Such disclosure shall be made in accordance with the GSA regulations governing inspection of records for this purpose, and any other relevant (i.e., GSA or Commerce) directive. Such disclosure shall not be used to make determinations about individuals.

8. A record from this system of records may be disclosed, as a routine use, to the public after either publication of the application pursuant to 35 U.S.C. 122(b) or issuance of a patent pursuant to 35 U.S.C. 151. Further, a record may be disclosed, subject to the limitations of 37 CFR 1.14, as a routine use, to the public if the record was filed in an application which became abandoned or in which the proceedings were terminated and which application is referenced by either a published application, an application open to public inspections or an issued patent.

9. A record from this system of records may be disclosed, as a routine use, to a Federal, State, or local law enforcement agency, if the USPTO becomes aware of a violation or potential violation of law or regulation.

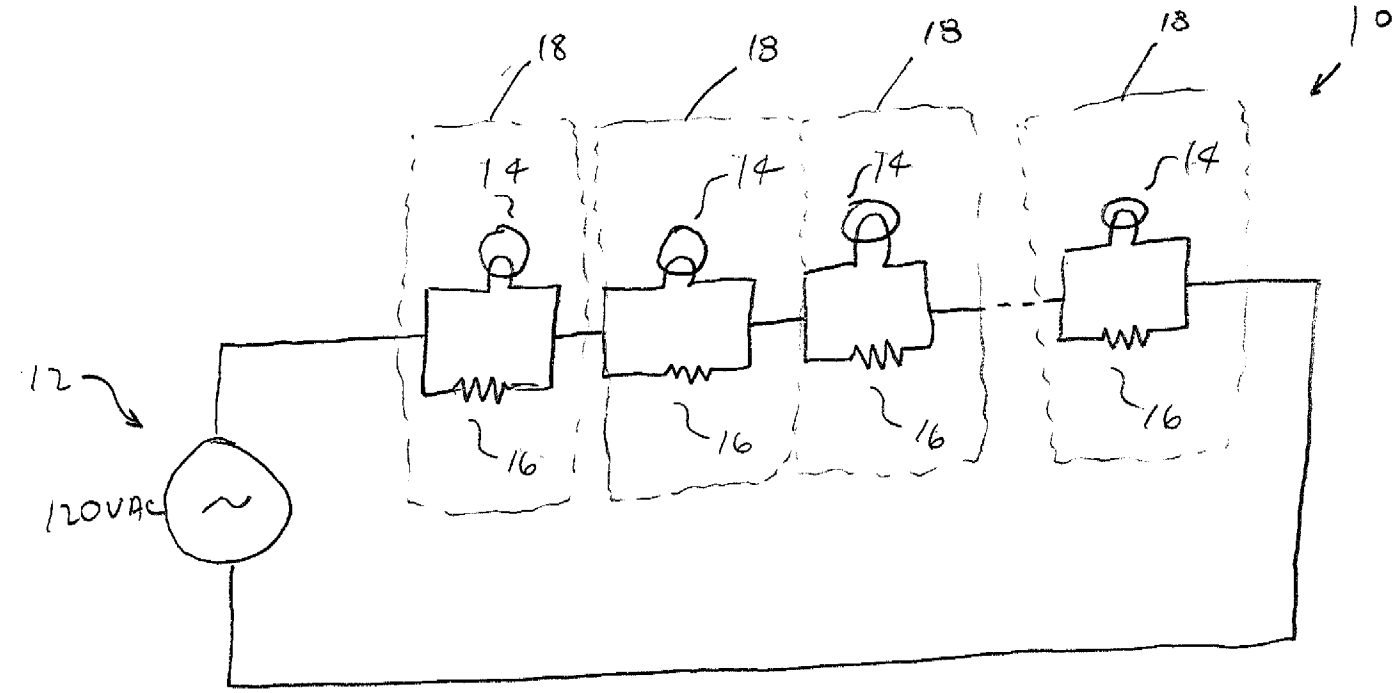

Key

Resistor

Bulb, incandescent

FIG. 1

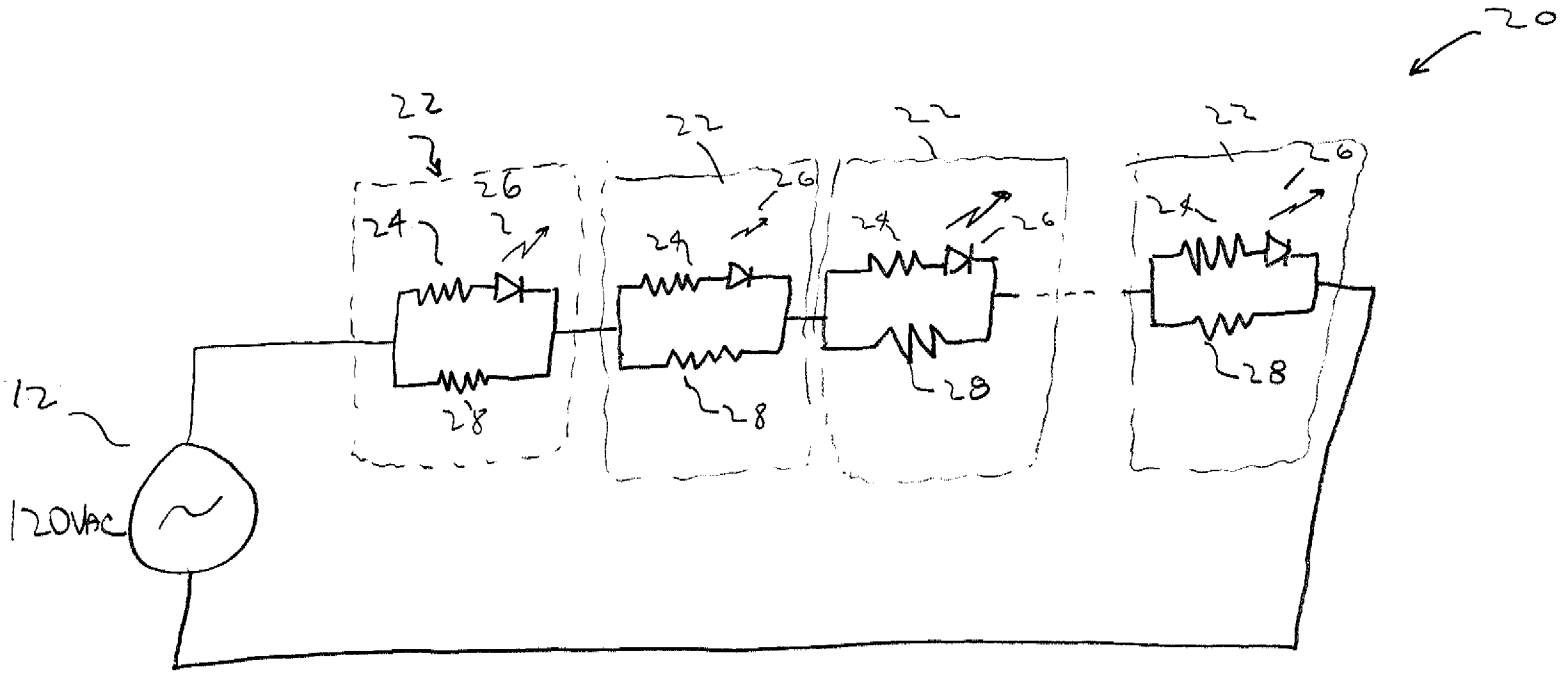

Key

Resistor

LED

FIG. 2

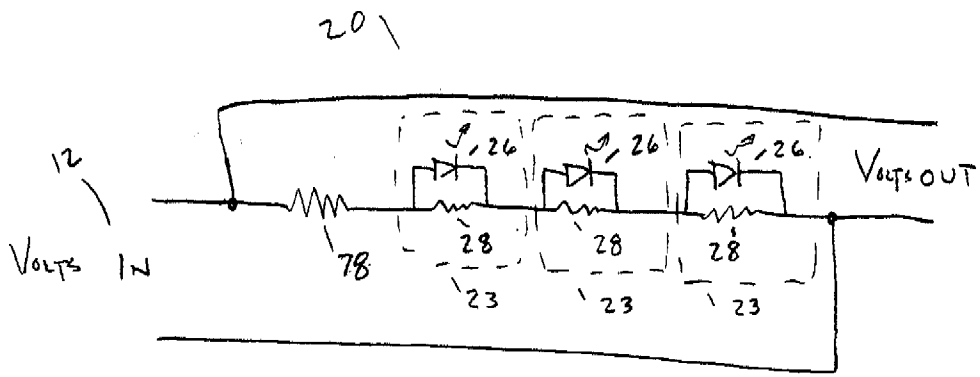

FIG 2a

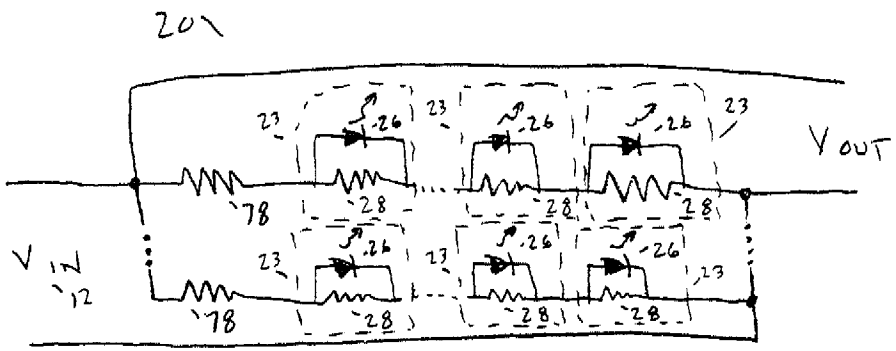

FIG 2b

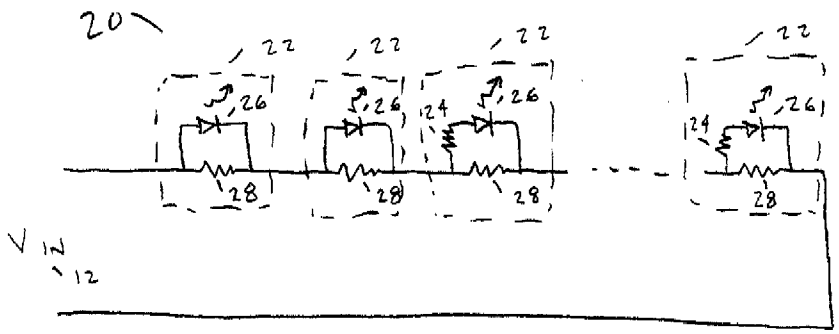

FIG 2c

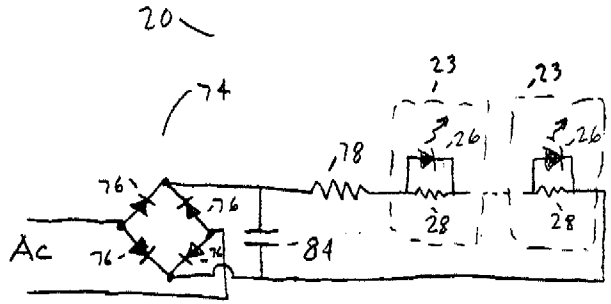

FIG 2D

KEY

RESISTOR

76 — DIODE

26 — LED

84 — CAPACITOR

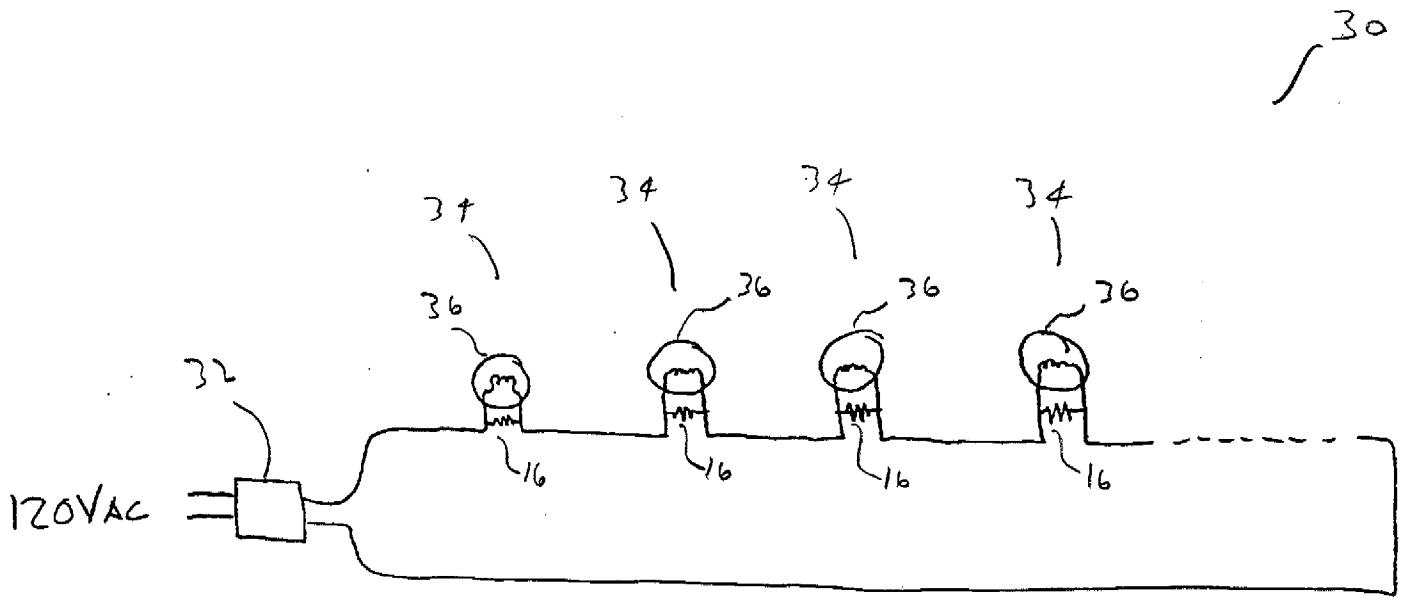

KEY

= MINI BULB 2.5V, 100 mA

= RESISTOR

FIG. 3

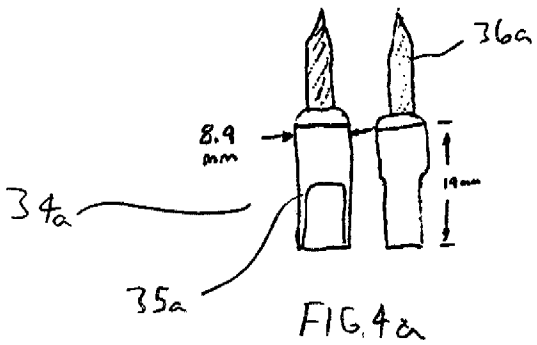

FIG. 4a

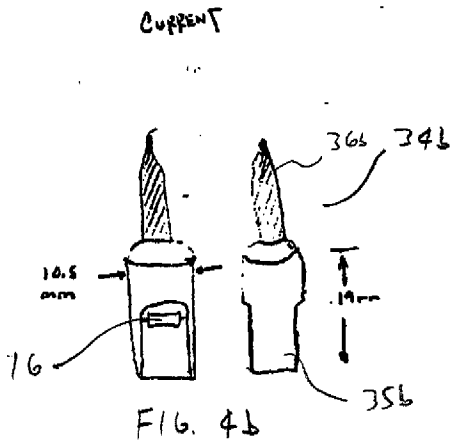

FIG. 4b

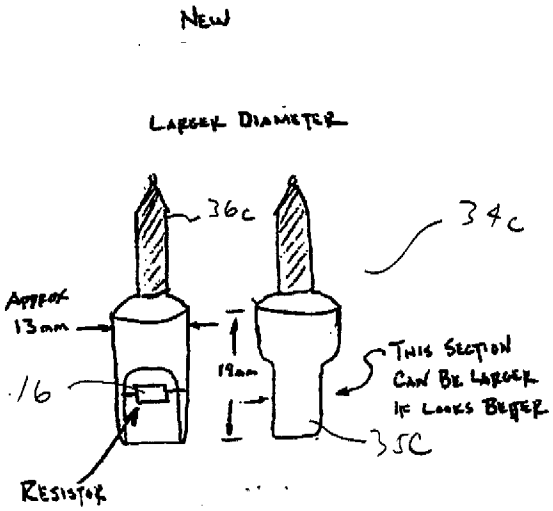

RESISTOR IS BETWEEN CONTACTS

FIG. 4c

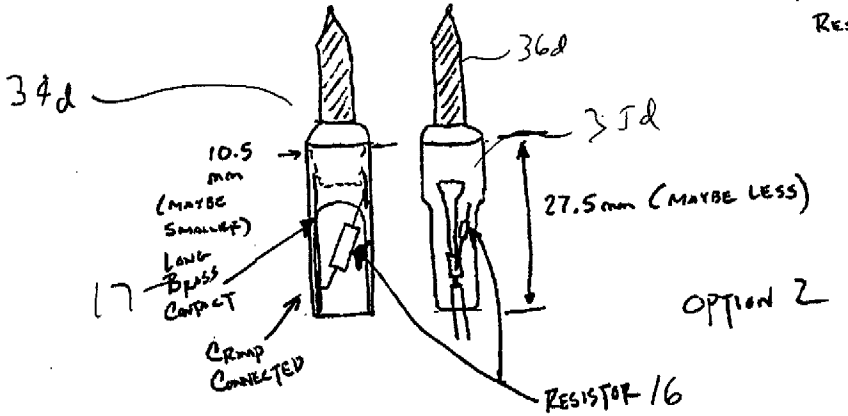

- LONGER BASE

FIG. 4d

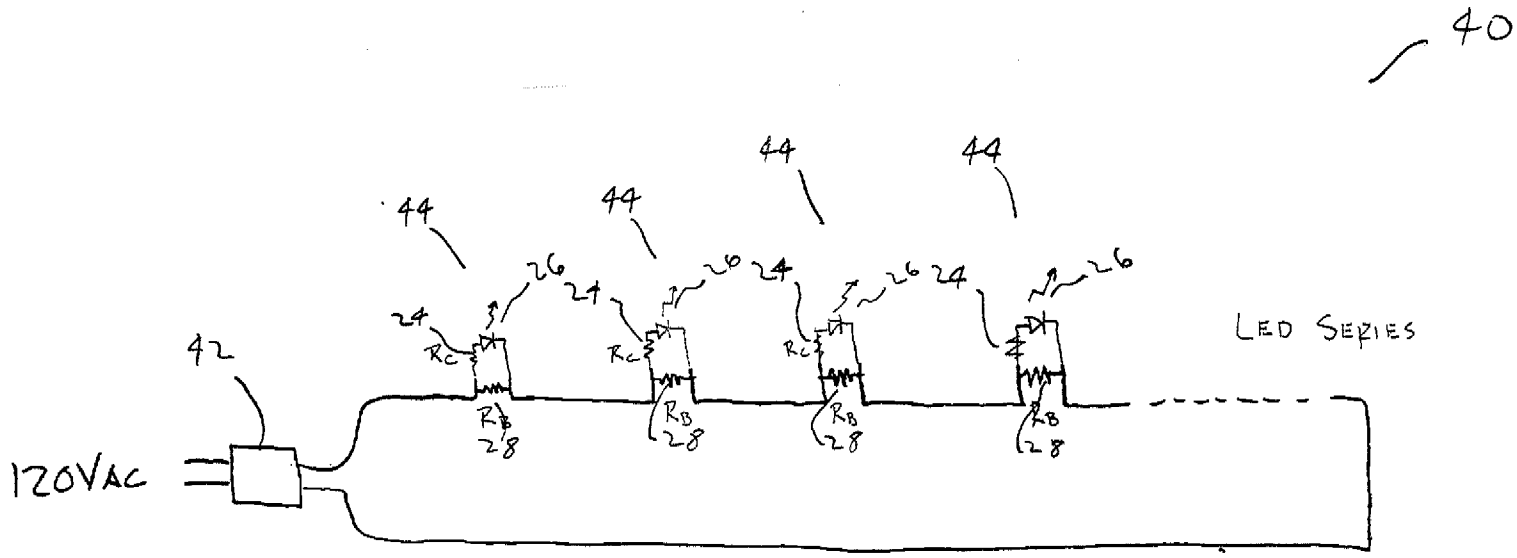

KEY

R_B = BYPASS RESISTOR

R_C = CURRENT LIMITING RESISTOR

= RESISTOR

Ω = OHM

= LED

FIG. 5

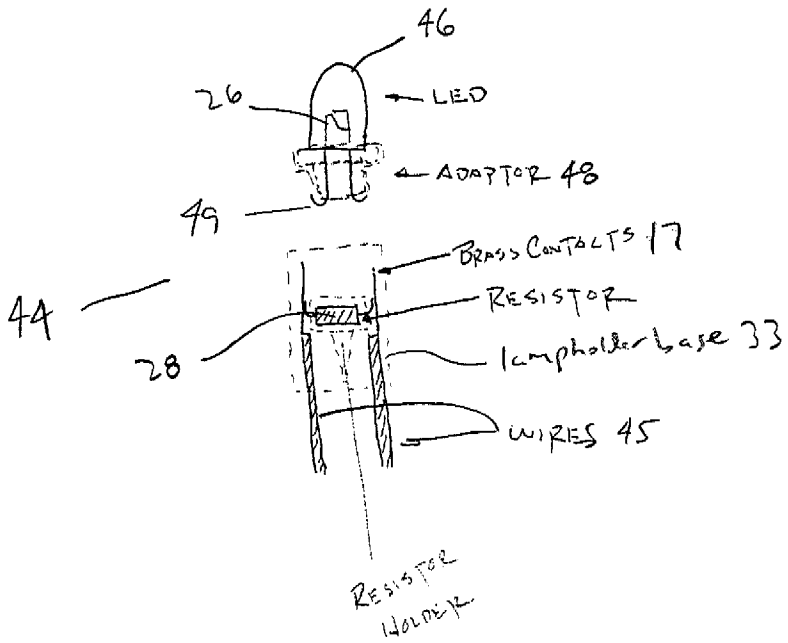
46
26
LED
ADAPTOR 48
49
BRASS CONTACTS 17
44
RESISTOR
28
lampholder base 33
WIRES 45
RESISTOR HOLDER

FIG. 6

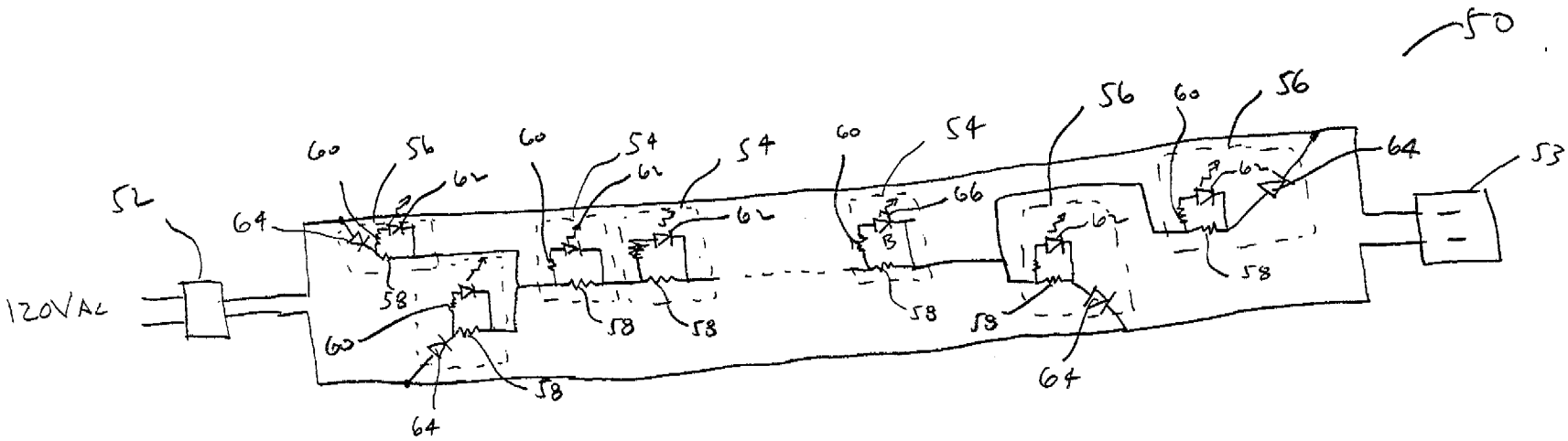

= DIODE

= LED

= LED WITH BLINKING IC INSIDE EPOXY

FIG. 7

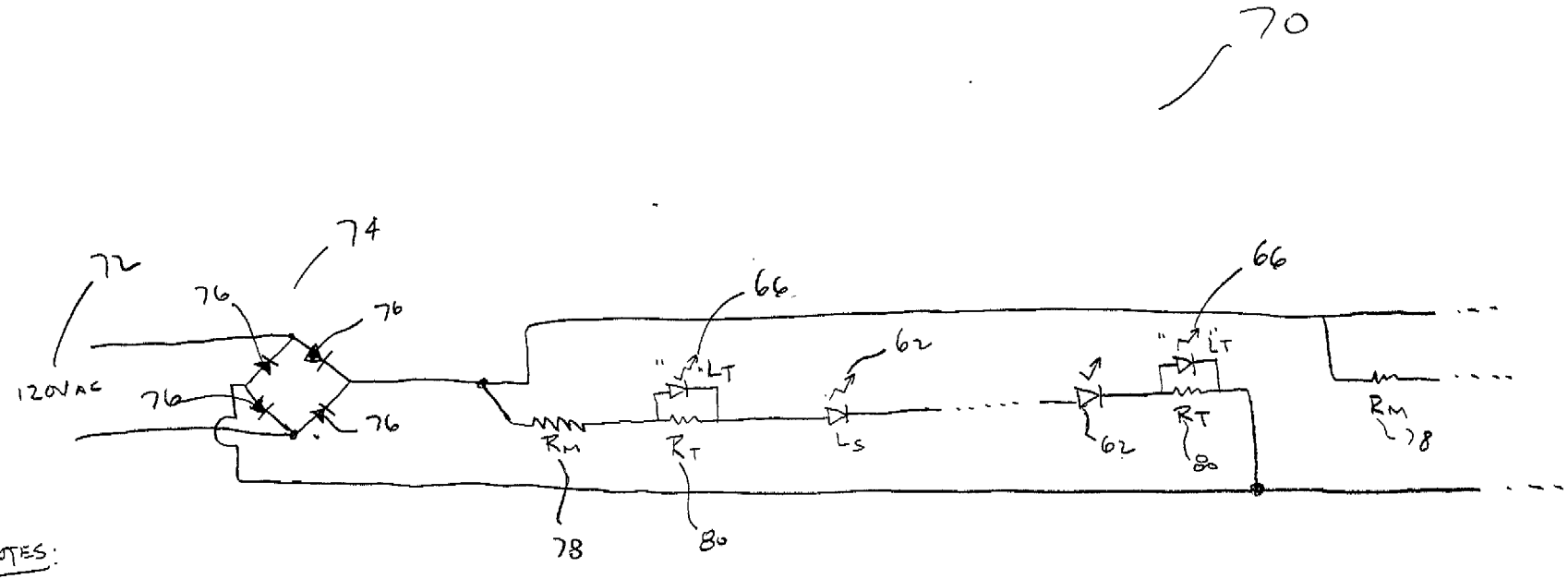

NOTES:

76 = DIODE

62 LS = STEADY ON LED

66 LT = BLINKING LED WITH IC INSIDE EPOXY

78 RM = MAIN CURRENT LIMITING RESISTOR FOR LEDS

80 RT = BYPASS RESISTOR FOR BLINKING LED APROX 560Ω

FIG. 8

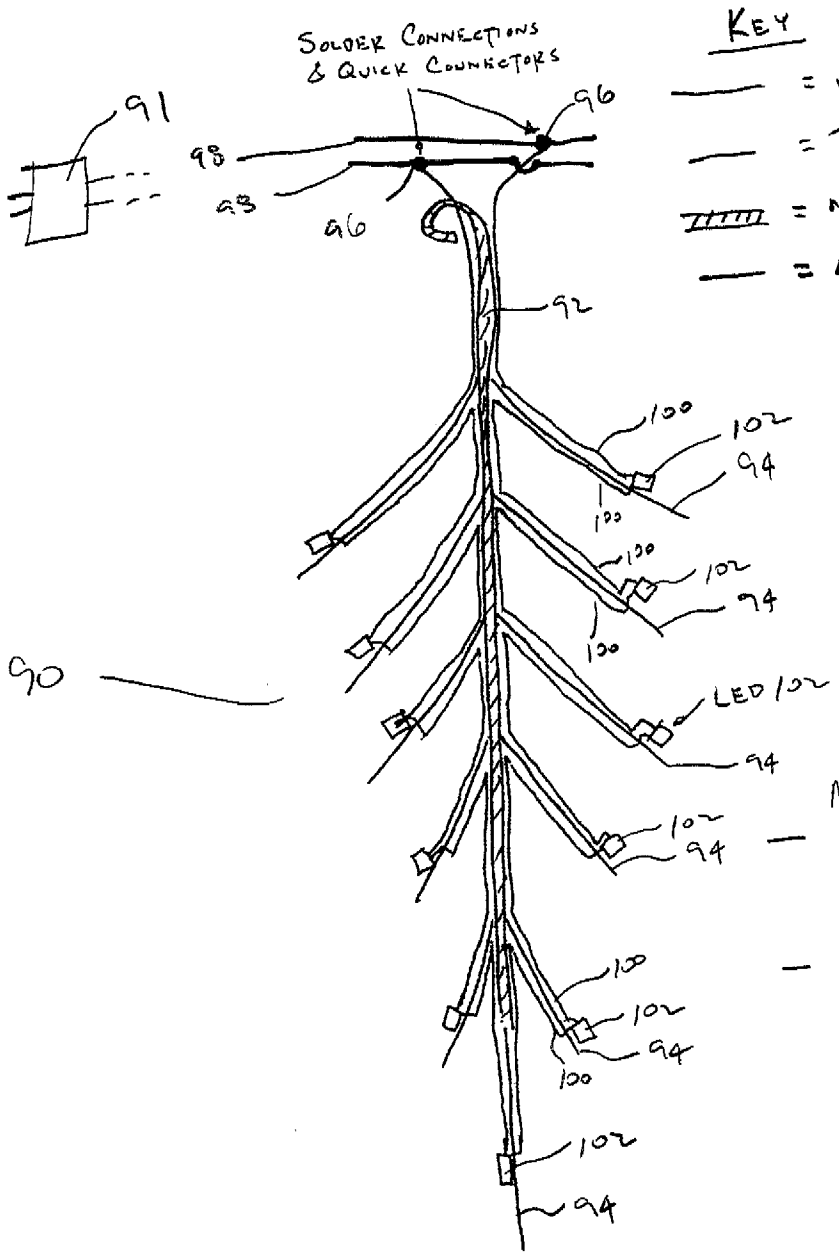

KEY

= WIRE & LED ~~28 AWG~~ 28 AWG

= BRANCHES/TIPS

= MAIN METAL ROD

= MAIN POWER WIRE 24 AWG

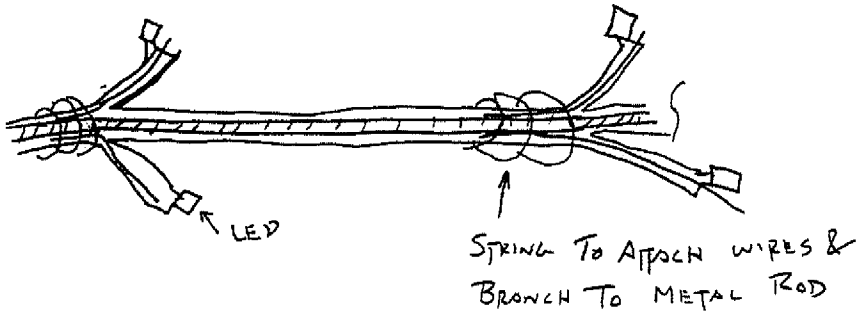

— May USE A 45V TO 50V DC CLASS 2 TRANSFORMER (UL LISTED) OUTPUT AMPS = 1.2A

— 10 BULBS PER CIRCUIT

LED TREE - CLASS 2 - REMAINS LIT

FIG. 9

RL-3

0019

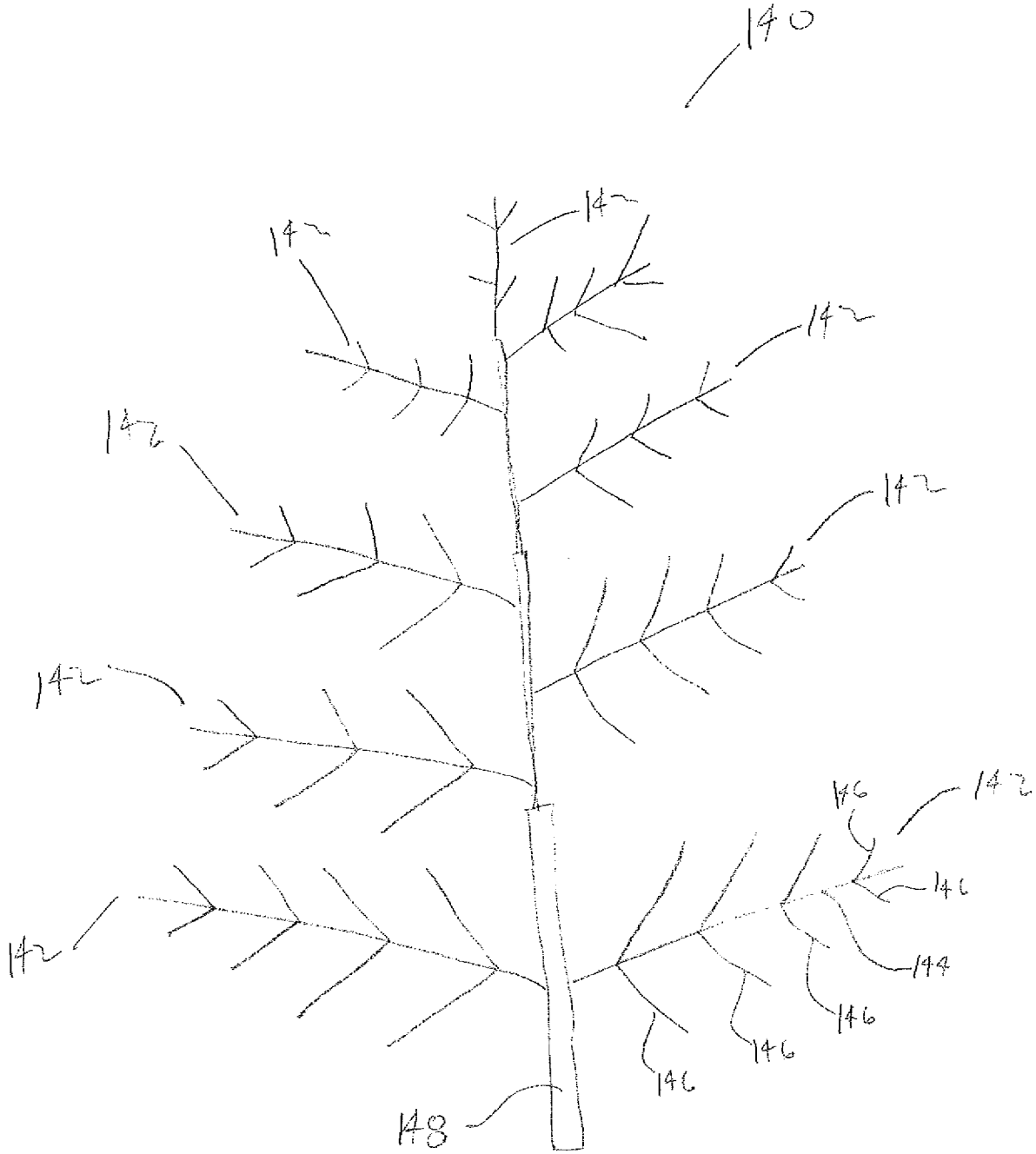

FIG. 10

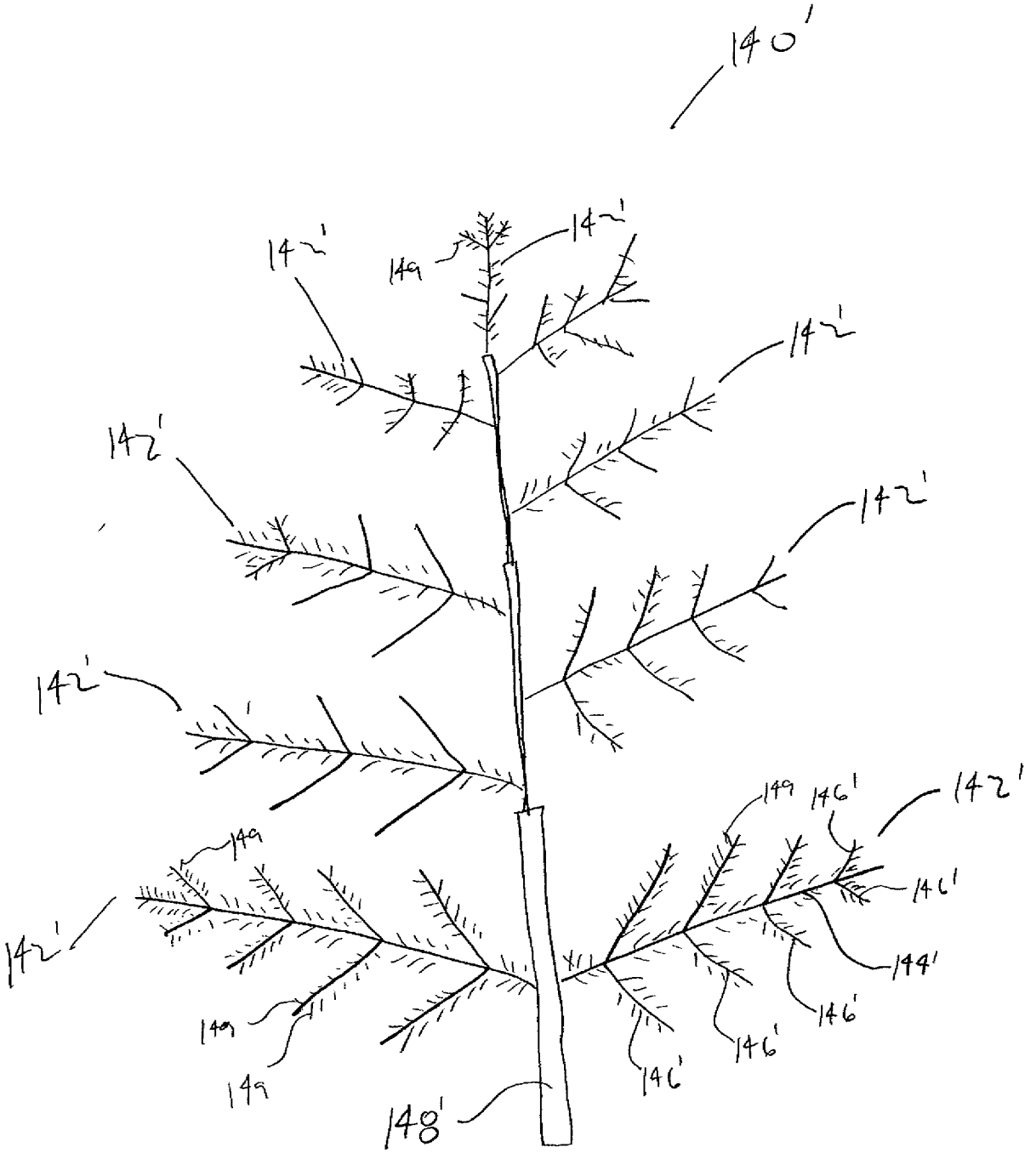
140'
142'
142'
142'
142'
142'
142'
142'
142'
149
149
149
149
149
146'
146'
146'
146'
146'
144'
148'

FIG. 11

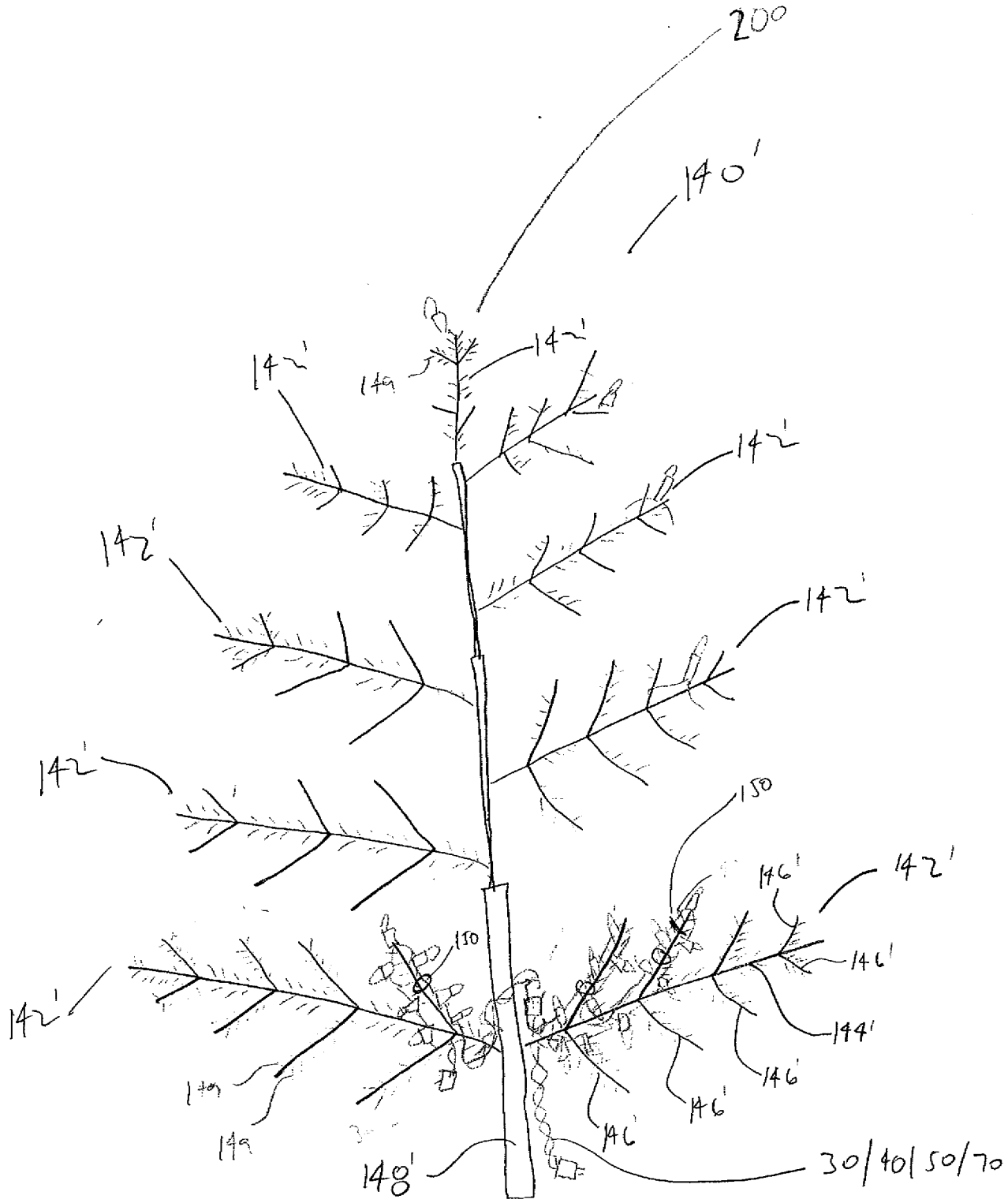
200
140'
142'
149
142'
142'
142'
142'
142'
142'
150
146'
142'
146'
144'
146'
146'
146'
150
149
149
148'
30/40/50/70

FIG. 12

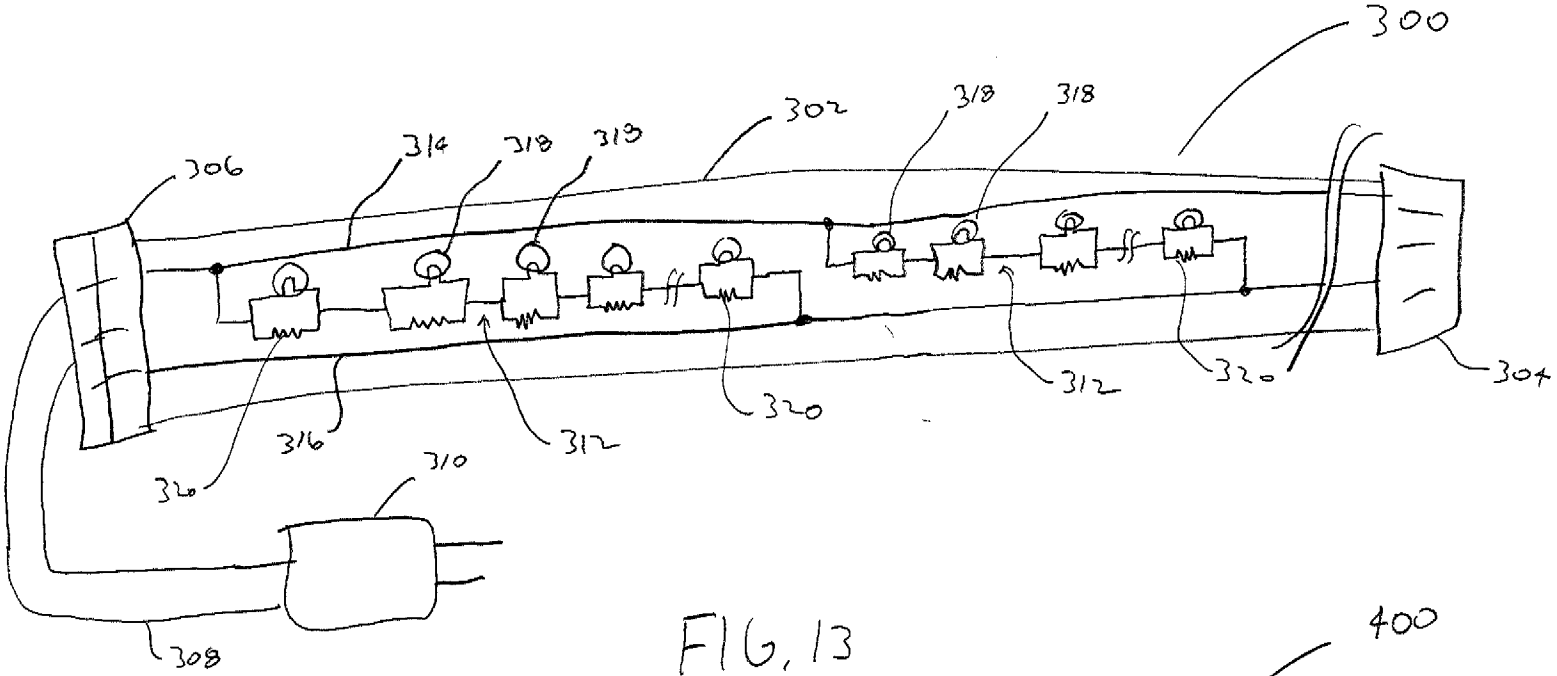
300
302
306
314
318
318
318
318
316
320
312
320
312
320
304
310
308

FIG. 13

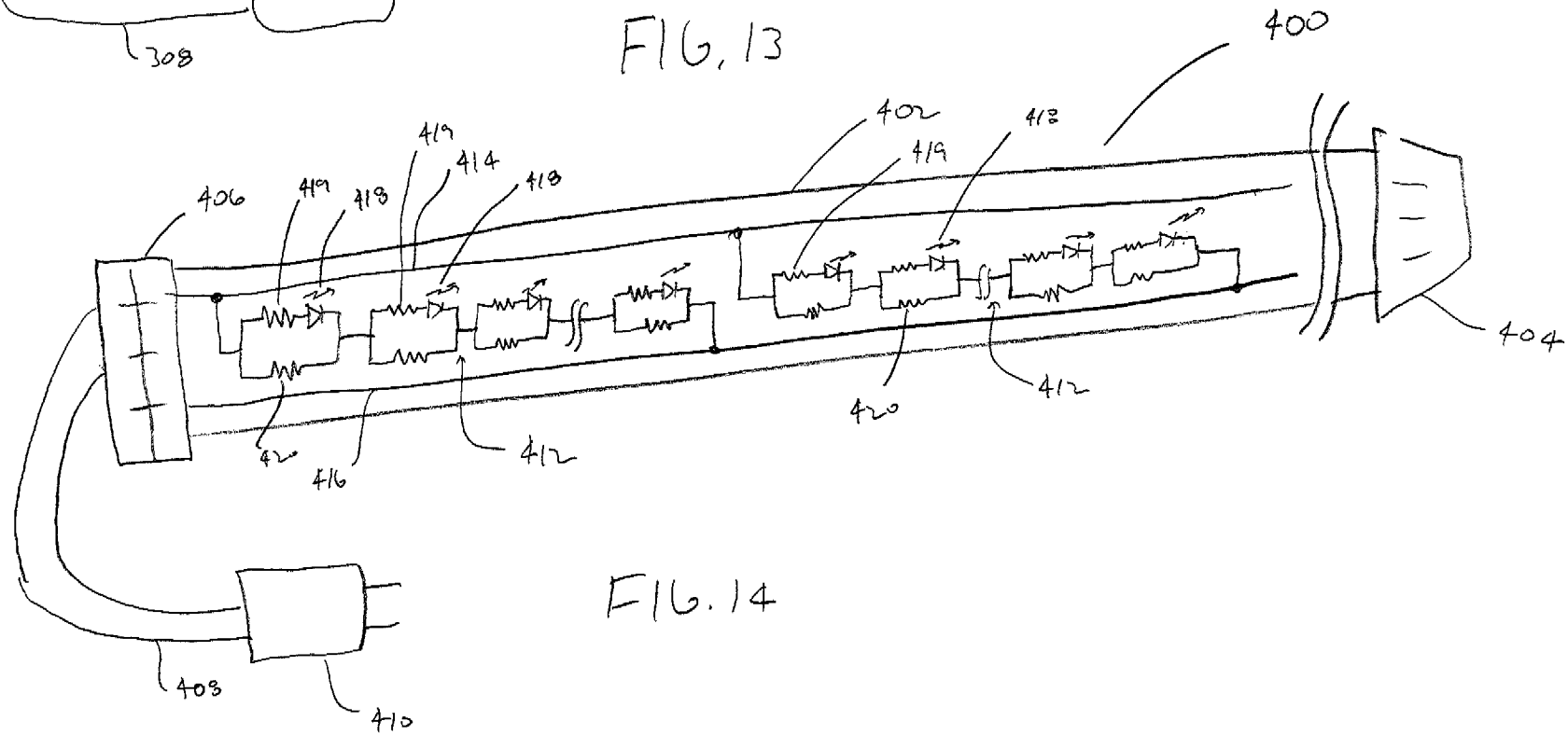
400
402
406
419
418
419
414
418
419
418
420
416
412
420
412
404
408
410

FIG. 14

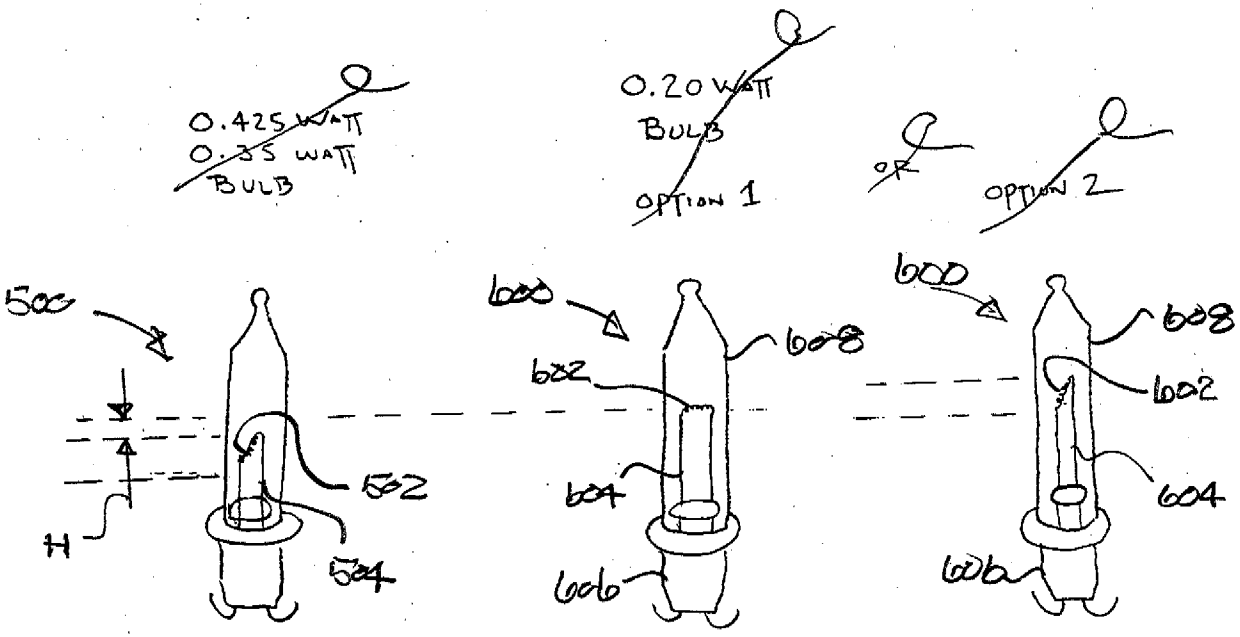

PRIOR ART
FIG. 15

FIG. 16

FIG. 17

LOW WATTAGE ENERGY SAVING BULB

SEASONAL SPECIALTIES
12/14/17

RESISTIVE BYPASS FOR SERIES LIGHTING CIRCUIT

Related Applications

The present invention claims the benefit of U.S. Provisional Application 60/876,868, filed on December 22, 2006, incorporated herein in its entirety by reference.

Technical Field of the Invention

The present invention is generally related to an improved light circuit for series circuits or series-parallel circuits utilizing incandescent, LED, or other types of lighting sources, and more particularly, the present invention relates to a resistive bypass element that will continue to conduct electricity and keep the remainder of the series circuit of lights lit even when one or more individual lighting elements are burnt out, defective, broken, have a loose connection or a broken connection in the series circuit, including series parallel circuits.

Background of the Invention

Series connected circuits containing lighting sources are well known especially in lighting strings and flexible lighting (Rope Lights) around the holidays when such light strings are used for decorative purposes. More recently, series connected lighting sources are becoming popular in task lighting, general illumination, automotive lighting, and specialty lighting utilizing LEDs. Generally, the lights in these lighting circuits are electrically in series rather than in parallel. One particular drawback to these types of lighting circuits is that when a lighting source is removed from the circuit, is burnt out, defective, or has a loose connection, the entire lighting circuit is rendered inoperable. Each lighting element within the circuit completes the electrical circuit, so when a light source is removed (for a replaceable type), a connection becomes loose, or the lighting

element burns out or other lighting component within the light source, a gap is created in the circuit and electricity is unable to continue to flow through the circuit. When a "good" light source is inserted into the circuit or socket, it completes the circuit, thus allowing electricity to flow uninterrupted.

Specifically, Fisherman, U.S. 2,760,120, discloses a series circuit for a light set with individual incandescent flasher or twinkle bulbs that include a bypass resistor in parallel with the bulb element. The operation of the Fisherman light set is limited to a set with a bulb that flashes on and off, a duty cycle of less than 100%. The on time of the bulb is necessary to control heat generation in the resistor, the resistor conducting during the off time of the bulb, thereby regulating the heat produced in the resistor circuit. The Fisherman device cannot be applied to a set wherein a bulb is burnt out, removed, or loose (and not conducting) to continue to illuminate the remaining bulbs in the circuit. In such situation, the bypass resistor is continually conducting and the temperatures generated on any bypass resistor of practical size (let alone one that fits into a socket) will far exceed ignition temperatures of near by materials used in construction of the set. Further, the Fisherman bulb is a high energy bulb, being 8 volt and ¼ amp, for a power consumption of 2 watts. A more energy efficient bulb is in demand at the present time. Presently, bulbs, such as that depicted generally at 500 in prior art Fig. 15, are utilized. Such bulbs are a considerable improvement when compared to the Fisherman bulb, having 0.35 – 0.425 watt power consumption. There is still a need in the industry for a more energy efficient bulb.

While previous mechanical and electrical circuit configurations have been used in an attempt to address the problems described above, none do so with the reliability,

simplicity, low cost of the present invention, and reduced energy consumption. The difficulties and drawbacks of previous lighting series circuit configurations are overcome by the resistive bypass for a series light circuit of the present invention.

Summary of the Invention

The systems and methods of the invention have several features, no single one of which is solely responsible for its desirable attributes. Without limiting the scope of the invention as expressed by the claims which follow, its more prominent features will now be discussed briefly. After considering this discussion, and particularly after reading the section entitled "Detailed Description of the Drawings" one will understand how the features of the light unit for a light string provide several advantages over traditional series light circuit.

Accordingly, it is an object of the present invention to provide a novel and improved bypass circuit for a series light circuit configuration capable of keeping uninterrupted current flow on condition that a light source of the circuit is removed, becomes loose, fails to conduct, or lighting element or other lighting device of the light source burns out, or becomes defective within the light source.

A further object of the present invention is to provide an incandescent bulb of reduced energy consumption while at the same time maintaining the level of brightness apparent to the human eye as is produced by current higher energy consuming bulbs (the standard bulb having a power consumption of 0.35 – 0.425 watts). The present invention utilizes bulbs that are less than 0.25 watts and are more preferably 0.20 watts. In order to achieve substantially the same brightness as the standard bulb, the bulb of the present

invention uses a higher purity tungsten filament, along with a tighter coil for the filament when rated 0.20 watts. Further, to improve the brightness, the filament is placed higher into the bulb canopy, so that losses from the plastic bulb adaptor at the bottom of the bulb do not absorb as much light. This provides for a measurably brighter bulb, and also provides to the human eye an even apparently brighter bulb, as the filament is higher up into the bulb, something that hasn't been done in the industry to date. Such bulbs can be utilized with a duty cycle of 100% and, when disabled, the conducting bypass resistor in the circuit of the present invention does not achieve dangerous temperature levels due to the reduced current flow. The Fisherman device is necessarily restricted to employment with flasher bulbs, and these must be used in a set where the bulbs are never fully off (disabled) so that the bypass resistor is not continually conducting.

Another object of the present invention is to provide the ability to allow for semiconductor light sources, such as light emitting diodes (LEDs), to provide a twinkling affect, by utilizing LED packages that incorporate integrated circuits (ICs) or other types of electronic circuits that control the flashing rate of the light source, which would only effect the individual lighting element as the resistive bypass would allow current to continue to flow in remaining lighting elements in the series circuit. In another embodiment of the invention, one or more semiconductor light sources, each with a flashing circuit, but without an associated bypass element in parallel, can be located in the lighting circuit in order to flash all the remaining light sources in the series circuit.

In yet another embodiment of the invention, one or more incandescent light sources, each with a flashing device, but without an associated bypass element in parallel,

can be located in the lighting circuit in order to flash all the remaining light sources in the circuit.

Yet another object of the present invention is to provide the ability to allow for semiconductor light sources, such as LEDs, to provide color changing characteristics by utilizing LED packages that incorporate two or more LED chips, and an IC, or other electronic circuit, that controls each LED chip in the LED package independently, while the electronic circuit or IC controls the current and/or voltage to the individual LEDs in the LED package, allowing for the mixing of the LED chip colors to get various resultant colors, which would only affect the individual lighting element as the resistive bypass would allow current to continue to flow in remaining lighting elements in the series circuit. Those skilled in the art would also recognize that a zener diode could be used in parallel to the light source and bypass circuit to help regulate the voltage across the light source.

Further objects and features of the invention will be readily apparent to those skilled in the art from the following specification which includes the appended claims and drawings.

To achieve the above objects and in accordance with the purpose of the invention, as embodied and broadly described herein, one embodiment of a light circuit for a series lighting circuit of the present invention comprises lighting sources connected in series with each other, where each lighting source has a resistive bypass element connected in parallel across it.

The embodiment of this device is to provide a low cost resistive bypass element for series connected light sources. The current movement towards low energy

incandescent bulbs, LEDs, and other energy saving light sources allows for a simple resistor to be utilized without creating the heating issues previously faced if such a device was attempted. Now with these low power consuming lighting sources, a resistive bypass element becomes the forefront of products, providing a low-cost bypass circuit.

In addition, the use of the resistive bypass element in series connected lighting circuits enables longevity and durability to continue without affect from the failure of any single light source due to defect, or connection issues.

In another embodiment of the present invention, the resistive bypass element may be connected in parallel with more than one light source, where the failure of one bulb would then only affect a limited amount of light sources in the lighting circuit, further saving the cost of bypass resistive elements across each lighting source.

In another embodiment of the present invention, a resistive bypass circuit allows for other types of lighting effects, such as twinkle type products where a semiconductor light source can utilize miniature ICs inside a lighting package, and will only affect that lighting source, allowing the remaining light sources to function independently. Also, more than one light package may have the twinkling effect. For this embodiment, the resistive bypass may only be used across those twinkling effect light sources, as an additional embodiment, or may be used across all lighting sources.

One more embodiment of the resistive bypass circuit is that it also allows for the use of color changing LED packages, that utilize more than one LED chip inside, and may consist of an IC controlled mixing of the LED chips to create other resultant colors, and will only effect that lighting source, allowing the remaining light sources to function independently. Also, more than one light package may have this color changing effect.

For this embodiment, the resistive bypass may only be used across those color changing light sources, as an additional embodiment, or may be used across all lighting sources.

The series circuits above with bypass resistors, can also be employed in series – parallel circuits, and be employed in products with or without lampholders, including directly connected to printed circuit boards, as other embodiments of the invention.

The present invention has numerous features and advantages associated therewith.

The bypass circuit of the present invention herein described has an advantage of keeping the remainder of lights within a series lighting circuit lit when a light source is missing from, or becomes loose in, one or more light source sockets or circuits, or becomes defective. This is accomplished by continuing to conduct electricity through the series light circuit even when a light source is broken, loose, poor connection, or defective light source.

The bypass circuit can be utilized in AC or DC circuits powered by batteries, step down transformers, AC utility power, or converters from AC to DC or DC to AC power, pulsed DC, and filtered or unfiltered DC.

As will be realized, the invention is capable of other and different embodiments and its several details are capable of modifications in various respects, all without departing from the invention. Accordingly, the drawing and description are to be regarded as illustrative and not restrictive.

Other objects, advantages and novel features of the present invention will be drawn from the following detailed description of preferred embodiment of the present invention with the attached drawings. The accompanying drawings are included to provide a further understanding of the invention, and are incorporated in and constitute a

part of this specification. The drawings illustrate embodiments of the invention and, together with the description, serve to explain the principles of the invention, in which:

Brief Description of the Drawings

Fig. 1 is a circuit diagram of one embodiment of the present invention where the lighting sources are incandescent bulbs;

Fig. 2 is a circuit diagram of one embodiment of the present invention where the lighting sources include LEDs;

Figs. 2a – 2c show various configurations and locations of the current limiting resistor and series and series-parallel configurations of Fig. 2;

Fig. 2D shows a circuit diagram of one embodiment using a full wave rectifier with an optional filter capacitor;

Fig. 3 is a diagram of a light string embodiment of the present invention where the lighting sources are incandescent bulbs and the lighting element is a filament;

Fig. 4a is a front and side view of a light source assembly where the light source is an incandescent bulb;

Fig. 4b is a front and side view of a light source assembly that includes an incandescent light bulb and a resistor;

Fig. 4c is a front and side view of a light source assembly that includes an incandescent light bulb, a resistor, and a large-diameter lamp holder;

Fig. 4d is a front and side view of a light source assembly showing the brass contacts of the light source assembly and an alternate resistor mounting position;

Fig. 5 is a diagram of a light string embodiment of the present invention where the light sources LEDs and the lighting element is an LED semiconductor chip;

Fig. 6 is a front view of a light source assembly where the light source includes an LED encased in an epoxy lens;

Fig. 7 is a diagram of one embodiment of the present invention that produces a twinkling effect and includes a split construction of a full wave rectifier;

Fig. 8 is diagram of another embodiment of the present invention that produces a twinkling effect and includes traditional full-wave rectification;

Fig. 9 is a front and close-up view of the present invention embodied in a wire tree branch;

Fig. 10 is a front view of a needless artificial tree as used in a lighted green goods system of the present invention;

Fig. 11 is a front view of an artificial tree with needles as used in a lighted green goods system of the present invention;

Fig. 12 is a front view of one embodiment of a lighted green goods system using bypass circuit light strings;

Fig.13 is a view of a flexible lighting system with a bypass circuit using incandescent light sources;

Fig.14 is a view of a flexible lighting system with a bypass circuit using LED light sources;

Fig. 15 is an elevational view of a prior art bulb;

Fig. 16 is an elevational view of a bulb of the present invention; and

Fig. 17 is an elevational view of a bulb of a further embodiment of the present invention.

Detailed Description of the Drawings

The resistive bypass circuit 10, being a set or sting of lights, as shown in Fig. 1 includes a power source 12, light sources 14, and bypass resistors 16. Power source 12 is shown in Fig. 1 is a 120 volt alternating current (AC) power source, power source can be any voltage AC, direct current (DC), AC converted to DC, or DC converted to AC, both filtered or unfiltered DC, and pulsating DC or any other power source that can power the lighting sources. Light sources 14 may include incandescent bulbs, LEDs, or other lighting devices. Light sources 14 of Fig. 1 are incandescent bulbs.

Bypass resistors 16 are configured in parallel with light sources 14, and combinations of bypass resistors 16 and light sources 14 are configured in series. Light sources 14 and bypass resistors 16 may be packaged together into light source assemblies 18. When all light sources 14 are operating properly, a portion of the total current flowing through bypass circuit 10 flows through light source 14, while the remainder flows through bypass resistor 16.

In the event that a light source 14 ceases to conduct, and current flow is interrupted through that light source 14, the total current will flow through its corresponding bypass resistor 16. A missing, broken, or improperly connected light source 14 may cause a light source 14 to fail to conduct. In the case where light source 14 is an incandescent bulb, filament failure, or burnout, may be the cause of a light source failing to conduct. Without bypass resistors 16 operating in parallel with light sources 14, any failure in a light source 14 would interrupt power to all other light sources 14. The values of bypass resistors 16 are typically the same, and are chosen such

that an appropriate current flows through light sources 14 when all light sources are operating properly.

Fig. 2 illustrates another embodiment of the present invention that uses LEDs as a light source. Resistive bypass circuit 20 includes power source 12, light sources 26, optional current limiting resistors 24, and bypass resistor 28. Light sources 26, optional current limiting resistors 24, and bypass resistors 28 may be packaged together into light source assemblies 22. In the embodiment shown in Fig. 2, light source 26 is a single LED, preferably of equal to or less than 0.25W. In other embodiments, light source 26 may be an LED chip that includes more than one LED. Those skilled-in-the-art will appreciate that the value of current limiting resistors 24 will be chosen based on the type of light source 26, the number of light sources 26, the number of bypass resistors 24, and the number and value of bypass resistors 28.

In the embodiment shown in Fig. 2, power source 12 provides power to bypass circuit 20. When all light sources 26 are operable, current flows through the circuit, with a portion of the total current flows through the path containing current limiting resistor 24 and light source 26, while the remainder flows through bypass resistor 28. When current flow is interrupted through a light source 26, total current flows through the corresponding bypass resistor 28, allowing the remaining light sources 26 to operate.

Resistive bypass circuits 10 and 20 may be used with any series, or series-parallel connected lighting device where failure of the bulb or its connection will turn off some or all of the bulbs. This includes mini-bulb lighting strings used for Christmas and other holiday decorative lighting, rope lights (also known as flexible lighting) and other general

lighting applications that use series connected lamps or LEDs, such as a LED desk lamp, or under-counter light.

Power source 12 is shown in Fig. 2 is a 120 volt alternating current (AC) power source, power source can be any voltage AC, direct current (DC), AC converted to DC, or DC converted to AC, both filtered or unfiltered DC, and pulsating DC, or any other power source that can power the lighting sources.

Figs. 2a – 2c show various configurations and locations of the current limiting resistor and series and series-parallel configurations of Fig. 2. Figures 2a and 2b, show light source assemblies, 22, that contain only the light source, 26, and the bypass resistor, 28, with the current limiting resistor located outside of the light source assembly 22.

Fig. 2D shows a circuit diagram utilizing a filtered full wave rectifier, 82 with an optional filter capacitor 84. The full wave rectifier could be replaced by a single rectifier diode, 76, to produce ½ wave rectification, and can be optionally filtered by capacitor 84. If a large enough capacitor 84 is selected, utilizing a single diode, 76, it could simulate full wave rectification to the circuit.

It was desired to utilize incandescent bulbs with the resistive bypass circuit 10 as shown in Fig. 1. In order to make the resistor set 10 work with modern, high temperature materials, it was needed to reduce the wattage of the bulbs to at least 0.25W (standard bulbs in the industry are either the common 0.425W bulb, or the less common 0.35W bulb, as noted in prior art Fig. 15), but it is preferable to use 0.20 Watts. Sets using 0.25W bulbs are on the edge of passing ANSI/UL standards, a critical condition for placing such sets in the marketplace. The 0.20W bulbs, on the other hand, more safely allow the set to operate, however, either could be used.

While the 0.25W bulbs (2.5V, 100mA) were close in brightness to the 0.425W bulbs (2.5V, 170mA) that are commonly used, by using a thinner filament wire or other techniques to compensate for lumen output, the brightness of the 0.25 watt bulb is substantially equal to the standard 0.425 bulb. A conventionally constructed 0.20W bulb (2.5V, 80mA) bulb is even dimmer than the 0.35W bulb (2.5V, 140mA), and in the holiday market, the market demands bright bulbs.

To make up for the shortcomings of a conventionally constructed 0.20W bulb, the bulbs of the present invention, noted generally at 600 in Figs.16 and 17, employ a higher purity tungsten filament, along with a tighter coil of the filament 602. Further, the filament 602 is disposed higher into the bulb canopy 608 by the dimension H, noted in Fig. 15. The filament 602 is connected by relatively longer leads 604 than the leads 504 of the prior art that support the prior art filament 502. An advantage of such disposition is that losses from the plastic bulb adaptor 606 at the bottom of the bulb 600 did not absorb as much light. Such disposition of the filament 602 provides for a measurably brighter bulb 600, and also, as viewed by the human eye, an even brighter bulb 600 is perceived as compared with the prior art construction of Fig. 15, as the filament 602 is higher up into the bulb canopy 608, a construction that hasn't been done in the industry.

Further, to enhance the brilliance of the reduced wattage, one version of the low energy bulb 600 of the present invention, the filament 602 is formed of a purer form of tungsten and is of thinner construction as compared to the prior art bulb 500. Additionally, the filament 602 is wound tighter than the filament 502 of the prior art. However, one skilled in the art would recognize that if brighter bulbs were not desired, standard bulb construction could be utilized.

In addition, as noted with respect to Fig. 2 above, resistor sets 10 may be employed with light sources 26 being LEDs. Such LEDs typically operate at much lower current (20mA) with a power draw of 0.08W or less, and therefore allow for very cool operation of the resistor bypass circuit 28, even when the bypass resistor 28 is continually conducting. In either case, there is substantial energy savings. In another embodiment, higher power LEDs or several LEDs in parallel may be employed across the bypass resistor.

The above noted features allow the resistor bypass circuit 10 to operate as a twinkling set by inserting a flasher bulb into any part of the circuit or, if provided, into a socket socket. Flasher bulbs are bulbs where a bimetallic strip heats, and open circuits the bulb (see for example, Fisherman), where a normal holiday light set that creates a twinkling effect has to use twinkling bulbs, where when the bimetallic strip is heated by the filament, it shorts out the bulb, allowing the remaining bulbs to light. In such sets where the bulbs short, ANSI/UL has very stringent requirements for construction and operation. In contrast however, in the resistor bypass set 10 of the present invention, use of a flasher bulb is not restricted, nor does it pose any additional safety concerns, as when the flasher bulb open circuits, it allows the resistor bypass set to work as it would normally, and actually reduces the current to the remaining bulbs, allowing the remaining bulbs to run cooler, as compared to the twinkle bulb set where it operates hotter when one or more bulbs is in the shorted condition.

The resistor bypass set 10 also has the advantage of being a safer set than the standard mini light sets that commonly use a shunt wire inside the bulb to allow the current to continue flowing, as sets containing shunted bulbs create short circuits across

the bulb, further dividing the input voltage by the remaining bulbs, increasing the power drop across each bulb. The increased power drop increases the surface temperature of the bulb, and causing the remaining bulbs in the set to burn out faster. This repeated action causes the bulbs to become very hot, where as the resistor bypass set 10 of the present invention operates such that every bulb failure, places a higher resistance into the set than the bulb it replaces, causing the remaining bulbs to proportionally dim, causing them to increase their life, and to run cooler. However, the resistor could be sized such that the current is not reduced, and may remain relatively constant, or even slightly increase, depending on the effect desired.

Fig. 3 is an embodiment of the present invention in the form of a series-connected decorative light string 30. Decorative light string 30 includes power plug 32, optional light source assemblies 34, incandescent bulbs 36 and bypass resistors 16. Power plug 32 may directly plug into utility power (120V, 208V, 220V, 240V, 280V, etc), connect to a step down power supply (such as a Class 2 power supply) or may be omitted for direct connection to a power source. As shown in Fig. 3, incandescent bulbs 36 may be a miniature bulb-type (mini bulb) operating on 2.5 VAC at 70-120 mA, or some other low current draw bulb. Resistors 16 may be in the range of 30 ohms to 60 ohms, though the value of resistors 16 will vary according to the total current flow desired, as well as according to other factors mentioned above. Resistors 16 are configured in parallel with light sources 36. Light source assemblies 34, if provided, are configured electrically in series with each other. As indicated earlier, when a light source assembly 36 fails, total system current will flow through the corresponding bypass resistor 16, allowing the other light sources 36 to remain lit.

In one embodiment of the decorative light string 30 includes one or more light source assemblies 34 that includes a flashing device, but does not include a bypass element 16 in parallel, causing all of the remaining light source assemblies 34 in the series circuit of decorative light string 30 to flash.

Some methods of making light source assemblies 34 are further described in Figs. 4a-d, but the present invention is not limited to the embodiments depicted in the figures. Fig. 4a illustrates a light source assembly 34a including a light source 36a in the form of a mini bulb, and a lamp holder 35a. Fig. 4b illustrates a light source assembly 34b that includes a light source assembly 34b, a light source 36b in the form of a mini bulb, a bypass resistor 16, and a lamp holder 35b. Lamp holder 35b may be larger than lamp holder 35a to accommodate bypass resistor 16. Bypass resistor 16 is connected across light source 36b in parallel. The connection may be accomplished by soldering, crimping, friction fit, compression fit, or other means, including connecting to a pair of brass contacts (not shown), to the leads of light source 26b, or to other conductors.

Fig. 4c illustrates yet another light source assembly, light source assembly 34c, which includes a light source assembly 34c, a light source 36c in the form of a mini bulb, a bypass resistor 16, and a lamp holder 35c. In this embodiment, lamp holder 34c is even larger than lamp holder 35b.

Fig. 4d illustrates another light source assembly, light source assembly 34d, which includes a light source assembly 34d, a light source 36d in the form of a mini bulb, a bypass resistor 16, and a lamp holder 35d. In this embodiment, lamp holder 34d may be longer than lamp holder 35b. In the embodiment shown in Fig. 4, one lead of bypass resistor 16 can be crimped to the brass contact. The other lead of bypass resistor 16 may

be crimped to a second brass contact 17, or connected by other means, such that it is electrically in parallel with light source 36d. Other means includes being connected to the leads of light source 36. In addition to crimping, soldering, friction fit, compression, and other common connection means may be employed.

In yet another embodiment, light sources 36 may be mini bulbs filled with an inert gas. Since the use of a bypass resistor 16 has the potential to decrease current flow through light sources 36, an inert gas, such as Krypton, can be used in place of a vacuum to allow for the bulb filament to burn whiter and maintaining the same bulb life expected from mini bulbs and get even closer to a standard mini bulb brightness.

Lamp holders 35 of light source assemblies 34 may include molded lamp holders, assembled-on lamp holders, heat-shrink formed lamp holders, and other types of lamp holders. Light sources 36 may be removable, or non-replaceable. In another embodiments, the light source assemblies 34 may by mounted on a rigid or flexible printed circuit board, or connected directly to conductors or wires.

Another embodiment of the present invention is a light string 40 as shown in Fig. 5. Light string 40 includes an optional power plug 42, light sources 26, current-limiting resistors 24, and bypass resistors 28. Light sources 26, current limiting resistors 24, and bypass resistors 28 may be packaged together into light source assemblies 44. The embodiment as shown works substantially as described above.

One embodiment of light source 44 is shown in Fig. 6. Lamp holder base 33 houses bypass resistor 28, brass contacts 17, and the ends of wires 45. Bypass resistor 28 is connected to brass contacts 17 or other contact material to create a parallel configuration. Brass contacts 17 may be crimped on to wires 45 or other conductors.

The optional lamp holder adapter 48 attaches to epoxy or some other material lens 46. The lens 46 encases light source 26, where light source 26 in this embodiment is an LED.

In another embodiment, the bypass resistor 28, may be located directly across the LED leads 49 outside of any optional lens material, 46.

In an alternate embodiment, the bypass resistor 28 may be located within the LED lens material 46 in parallel with the LED, or even inside the glass bulb envelope for incandescent bulbs.

Fig. 7 illustrates another embodiment of the present invention, light string 50, that utilizes partial rectification and blinking LEDs inside the epoxy lens. Light string 50 includes a power plug 52, end connect 53, and light source assemblies 54 and 56. Light source assemblies 54 are connected in a series configuration. Light source assemblies 56 are connected to the series-connected light sources 54 as shown in Fig. 7.

Light source assemblies 56 includes a bypass resistor 58, optional current limiting resistor 60, light source 62, which in this embodiment is an LED, and diode 64. Light source assembly 56 may also includes a lamp holder (not shown), similar to the ones described above.

Light source assemblies 54 includes a bypass resistor 58, optional current limiting resistor 60, and light source 62 or light source 66. In this embodiment, light source 62 is an LED chip, and light source 66 is a "blinking" LED that incorporates a chip that turns the LED on and off for a blinking or flashing effect. Operation of light source 66 is independent of the other light sources 62 due to the bypass resistor 58. Light source assembly 54 may also includes a lamp holder (not shown), similar to the ones described

above. Circuit 50 may utilize more than one blinking LED 66, per circuit, or may only include blinking LED 66 as its light source.

In this embodiment, diodes 64 provide full-wave rectified power to light source assemblies 54, causing light sources 62 and 66 of light source assemblies 54 to remain lit throughout most of the AC power cycle. Light source assemblies 56 receive partial rectification due to the particular configuration of Fig. 7, causing light sources 62 of light source assemblies 56 to be powered throughout approximately half the AC power cycle.

When light source 66 is a blinking LED chip as shown in Fig. 7, current is periodically interrupted to the LED on the chip. Without bypass resistors 58, this would cause all light sources in light string 50 to lose power due to an interruption of current flowing through the series-connected circuit. However, bypass resistor 28 allows current to continue flowing, maintaining power to other light sources 62 and 66. Under normal operation, light source 66 will cause its LED to blink on and off, creating a twinkling effect, while other light sources 62 remain powered and lit. The use of multiple light sources 66 in a light string 50 creates a desirable twinkling effect as light sources 66 turn on and off, while light sources 62 remain lit.

In another embodiment, Light source 66 may be a multi LED chip configuration, programmed to change the light output color of the light source. Alternate embodiments may use a light source 66 where the bypass device 80 is an electronic circuit, or integrated circuit across the LED leads inside or outside of the epoxy housing/lens.

Figure 8 illustrates another embodiment where, a resistive bypass circuit 70 utilizes full-wave rectification to provide power to all light sources 62 and 66. Resistive bypass circuit 70 includes an AC power source 72, full-wave rectifier 74 with optional

filter capacitor (not shown), main current limiting resistor 78, bypass resistors 80, light sources 66 and 62. Full-wave rectifier 74 includes four diodes 76. Full wave rectifier 74 may optionally employ one diode 76, and a sufficiently sized filter capacitor to simulate full wave rectification. The AC power source 72 may be any source voltage.

In this embodiment, full-wave rectifier 74 provides DC power for bypass circuit 70. Main current limiting resistor 78 limits the total amount of current flowing through circuit 70 and is sized partially based on the number of light sources 62 and 66. The use of a single current limiting resistor 78 rather than multiple current limiting resistors simplifies design and manufacturing efforts, but may optionally be manufactured with multiple current limiting resistors as described in the embodiments above. Lights source 66 in the form of blinking LED chips, along with bypass resistors 80 create a twinkling effect when embodied in a light string. The size of bypass resistor 80 depends on the electrical characteristics of light source 66, but in one embodiment may be 300 to 600 ohms. In some embodiments, bypass resistor 80 may only be used in conjunction with light sources 66, and not with light sources 60. This configuration would enable the twinkling effect, but would eliminate the bypass function at light sources 62.

Another embodiment is the use of circuit 70 in a DC-supplied circuit, such that full wave rectifier 74 is not required. Additional embodiments of circuit 70 are configured in a series-parallel configuration. In another embodiment, light source 66 may be a multi LED chip configuration, programmed to change the light output color of the light source.

Fig. 9 depicts a decorative lighting sculpture 90 that includes an optional power plug 91, wires 98, optional connectors 96, main rod 92, branches 94, wires 100 and light

source assemblies 102. Power plug 91 may be connected in one embodiment to a 45 VDC to 50 VDC class 2 transformer with an output of 1.2 A, though other voltage ranges and power sources may be used. Alternatively, light sculpture 90 may not include power plug 91 and may be directly connected a power source. Light source assemblies 102 may be similar in configuration to the other light source assemblies described above, utilizing incandescent bulbs, LEDs, or other light sources configured in parallel with a bypass resistor.

In alternate embodiments, the bypass resistor may be replaced by bypass circuits utilizing transistors or other electronic active circuits.

The circuits and light strings of the present invention as applied to artificial trees, wreaths, garlands, and other artificial greenery, or alternatively to medium to large decorative products, such as stars, figures, icons and other decorative products provide a number of advantages. Replacing light strings due to light sources that have failed on a light string that is attached to an artificial tree or other decorative product, can be a difficult task since the string is not easily removed from the tree or products and the use of electric testers is not practical due to the fields such products produce with the volumes of wires and optional metal support structures. The bypass circuits and light sets described herein ensure that the light string will continue to remain lit even in the event of a light source failure, meaning that the entire light string does not have to be removed from the tree or decorative product. The combination of circuits, light strings and tree make a reliable, convenient lighted green goods system. Figs. 10-12 depict some of the artificial trees used in such a lighted green goods system.

Fig. 10 shows one version of an artificial tree 140 that includes a tree trunk 148, branches 142, branch mains 144, and sub-branches 146. Artificial tree 140 may be constructed of a combination of many materials as described above. In this embodiment, artificial tree 140 is constructed primarily of painted metal, or in another embodiment made primarily of plastic, or a combination of plastic and metal.

Fig. 11 shows another version of an artificial tree, 140'. Artificial tree 140' includes tree trunk 148', branches 142', branch mains 144', sub-branches 146' and needles 149. Needles 149 are commonly derived from PVC, nylon, and/or PE and may be green in color to make artificial tree 140' appear to be an evergreen or pine tree. In another embodiment it may use white needles and branches for different aesthetics.

FIG. 12 light string, such as light string 30, 40, 50, 70, or a combination thereof, attached to branches 142 of tree 140 to form a pre-lit tree system 200. Light strings 30, 40, 50, 70, or other embodiments of the present invention, may be similarly attached to trees 140'. Light string 30, 40, 50, 70 is shown attached to tree 140 via clips 150. Clip 150 may include but are not limited to C clips, snap lock clips, and wire ties.

Figs. 13 and 14 depict the present invention in the form of flexible lighting, or rope lighting. Flexible lighting 300 as depicted in FIG. 13 includes an outer encasement 302, end cap 304, power cap 306, power cord 308, power plug 310, and one or more bypass circuits 312. Flexible lighting 300 may operate on 120VAC, which is transmitted through power plug 310 and power cord 308, though other voltages may be used, and the input may be rectified or DC. Outer encasement 302 is typically made of a PVC material, and houses bypass circuit 312. Power cap 306 assists in attaching power cord

308 to bypass circuit 312 and may attach to outer encasement 302 by any number of known methods.

Bypass circuits 312 are series circuits and each bypass circuit 312 is connected in parallel with the other. Bypass circuit 312 includes a plurality of light sources 314 electrically connected in parallel with bypass resistors 320. Light sources 318 may be incandescent bulbs, LEDs, or other light sources. As described in previous embodiments, bypass resistor 320 may be replaced with another active circuit device. Bypass circuit 312 may also include conductors 314 and 316 which extend the length of flexible lighting 300 and provide power to the bypass circuits 312 when more than one circuit 312 is employed.

Operation of flexible lighting 300 is similar to those embodiments described above. During normal operation, current flows through both light source 318 and bypass resistors 320. If light source 318 fails, the entire bypass circuit 312 current flows through bypass resistor 320, allowing flexible lighting 300 to stay lit.

FIG. 14 depicts a similar flexible lighting system that relies on LEDs, rather than incandescent bulbs. Flexible lighting 400 as depicted in FIG. 14 includes an outer encasement 402, end cap 404, power cap 406, power cord 408, power plug 410, and one or more bypass circuits 412. Flexible lighting 400 may operate on 120VAC, which is transmitted through power plug 410 and power cord 408, though other voltages may be used, and the input may be rectified or DC. Outer encasement 402 is typically made of a PVC material, and houses bypass circuit 412. Power cap 406 assists in attaching power cord 408 to bypass circuit 412 and may attach to outer encasement 402 by any number of known methods.

Bypass circuits 412 are series circuits and each bypass circuit 412 is connected in parallel with the other. Bypass circuit 412 includes a plurality of LEDs 414 electrically connected series with resistors 419. Series connected LEDs 414 and resistors 419 are electrically in parallel with bypass resistors 420. Light sources 418 may be LEDs, or other light sources. As described in previous embodiments, bypass resistor 420 may be replaced with another active circuit device. Bypass circuit 412 may also include conductors 414 and 416 which extend the length of flexible lighting 400 and provide power to the bypass circuits 412 when more than one circuit 412 is employed. The number or location of resistors 419 in each circuit 421 may vary based on circuit requirements, with some bypass circuits 412 not including a resistor 419. In other embodiments, resistor 419 may be located external to circuit 421, and in line with circuit Bypass circuit 412.

Operation of flexible lighting 400 is similar to those embodiments described above. During normal operation, current flows through both light source 418 and bypass resistors 420. If light source 418 fails, the entire bypass circuit 412 current flows through bypass resistor 420, allowing flexible lighting 400 to remain lit.

Other embodiments of flexible lighting 300 and 400 may incorporate twinkling, flashing and color changing properties as previously described above.

It is desired to utilize incandescent bulbs with the embodiment of Fig. 1. In order to make the resistive bypass set 10 function with modern, high temperature materials, it was needed to reduce the wattage of the bulbs to at least 0.25W (standard bulbs in the industry are the 0.30W bulb). It is preferable to use bulbs of 0.20 Watts. Sets using 0.25W bulbs are on the edge of passing ANSI/UL standards, a critical condition for

placing the resistive bypass set 10 in the marketplace. The 0.20W bulbs, on the other hand, safely allows the set to operate and readily meet ANSI/UL standards, however, either 0.25W or 0.20W bulbs could be used.

In addition, the resistor sets with LED sources can also be employed, and as those typically operate at much lower current (20mA) drawing approximately 0.08W, those allow for very cool operation of the resistor bypass circuit. Additional embodiments may use a higher power LED or multiple LEDs connected in parallel across the resistive element.

Both of these lighting changes (lower wattage/higher brightness bulbs, and LEDs) were not anticipated, or contemplated by Fisherman, therefore only restricting it to flasher bulbs, and the use in such a set where the bulbs are never fully off.

In addition, this allows our resistor bypass set to operate as a twinkling set by inserting a flasher bulb into any circuit. Flasher bulbs are bulbs where the bimetallic strip heats, and open circuits the bulb, where a normal holiday light set that creates a twinkling effect has to use twinkling bulbs, where when the bimetallic strip is heated by the filament, it shorts out the bulb, allowing the remaining bulbs to light, however, in such sets where the bulbs short, ANSI/UL does not allow for such constructions in flexible (rope) lighting. However, in the resistor bypass set, use of a flasher bulb is not restricted, nor does it pose any additional safety concerns, as when the flasher bulb open circuits, it allows the resistor bypass set to work as it would normally, and actually reduces the current to the remaining bulbs, allowing to run cooler, vs. the twinkle bulb set where it operates hotter when one or more bulbs is in the shorted condition.

The resistor bypass set also has the advantage providing a shunting circuit, as

ANSI/UL standards do not allow for shunts that short circuit the bulb in rope (flexible) lighting, as the bulbs are not replaceable, and shorts caused by shunt wires in or out to the bulb would create an unsafe condition as more and more bulbs burn out. A shunt wire inside the bulb to allow the current to continue flowing, as those bulbs create short circuits, further dividing the input voltage by the remaining bulbs, increasing the power drop across each bulb, thereby increasing the surface temperature of the bulb, and causing the subsequent bulb to burn out faster, and this repeated action causing the bulbs to become very hot, where as the resistor bypass set operates such that every bulb failure, places a higher resistance into the set than the bulb it replaces, causing the remaining bulbs to proportionally dim, causing them to increase their life, and run cooler. However, the resistor could be sized such hat the current is not reduced, and may remain relatively constant.

In addition to decorative lighting, the bypass circuits of the present invention may also be used in general lighting applications including portable lighting, auto lighting, traffic lights and the like.

The invention addresses many of the deficiencies and drawbacks previously identified. The invention may be embodied in other specific forms without departing from the essential attributes thereof; therefore, the illustrated embodiments should be considered in all respects as illustrative and not restrictive. The claims provided herein are to ensure adequacy of the present application for establishing foreign priority and for no other purpose.

Claims

What is claimed is:

1. A resistor bypass circuit for a series lighting circuit comprising a plurality of serially connected light sources and a bypass resistor being connected in parallel with at least one of the respective light sources, each respective light source low wattage and being capable operating on a one hundred percent duty cycle as desired.

2. The resistor bypass circuit of claim 1, where the circuit is series-parallel connected.

3. The resistor bypass circuit of claim 1, the light source being an incandescent bulb.

4. The resistor bypass circuit of claim 1, the light source being a semiconductor

5. The resistor bypass circuit of claim 1, the light source being an LED.

6. The resistor bypass circuit of claim 4, the light source the semiconductor light source providing a twinkling effect.

7. The resistor bypass circuit of claim 6, the semiconductor light source utilizing electronic circuits that control the flashing rate of the light source, which would only affect the individual lighting element as the resistive bypass would allow current to continue to flow in remaining lighting elements in the series circuit.

8. The resistor bypass circuit of claim 6, the electronic circuits being LED packages that incorporate integrated circuits (ICs)

9. The resistor bypass circuit of claim 5, the light source being a semiconductor light source for providing color changing characteristics.

10. The resistor bypass circuit of claim 9, the semiconductor light source utilizing LED packages that incorporate two or more LED chips, and an integrated circuit (IC), the integrated circuit controlling each LED chip in respective LED packages independently.

11. The resistor bypass circuit of claim 10, the IC controlling the current and/or voltage to the individual LED chips in the LED package, the control providing for the mixing of the LED chip colors to get various resultant colors.

12. The resistor bypass circuit of claim 11, the control only affecting individual lighting element, the bypass resistor providing for current continuing to flow in remaining lighting elements in the series circuit.

13. The resistor bypass circuit of claim 1, a respective resistive bypass resistor being connected in parallel with more than one light source, the failure of one of the light sources thereby only affecting a limited number of the plurality of light sources.

14. The resistor bypass circuit of claim 1 being utilized in AC or DC circuits powered form a power source selected from the list consisting of batteries, step down transformers, AC utility power, or converters from AC to DC or DC to AC power, pulsed DC, and filtered or unfiltered DC, or partially filtered AC.

15. A resistor bypass circuit for a series lighting circuit comprising a plurality of serially connected incandescent light sources and a bypass resistor being connected in parallel with at least one of the respective light sources, each respective light source being low wattage when conducting and being capable operating on a one hundred percent duty cycle as desired.

16. The resistor bypass circuit of claim 15, where the circuit is series-parallel connected.

17. A method of forming a resistor bypass circuit for a series lighting circuit comprising serially connecting a plurality of light sources, connecting a bypass resistor in parallel with at least one of the respective light sources, and to be capable of operating on a one hundred percent duty cycle as desired.

18. The method of claim 17, including forming the light source of an incandescent bulb.

19. The method of claim 17, including forming the light source of a semiconductor

20. The method of claim 19, including forming the light source of an LED.

21. An incandescent light bulb having an illuminating element disposed in a region of a bulb canopy that is displaced distant from a bulb base.

22. The bulb of claim 21, a filament being formed of a relatively pure form of tungsten of relatively thin construction.

23. The bulb of claim 21, with a relatively greater number of windings of the filament.

24. The bulb of claim 21 with a relative tighter turn radius of the filament.

25. The bulb of claim 21, with a filament being formed of a relatively pure form of tungsten of relatively thin construction with a relatively tighter turn radius of the filament.

Abstract

A resistor bypass circuit for a series lighting circuit includes a plurality of serially connected light sources and a bypass resistor being connected in parallel with at least one of the respective light sources, each respective light source being low wattage and being capable operating on a one hundred percent duty cycle as desired.

Doc Code: PA..
Document Description: Power of Attorney

PTO/AIA/82A (07-13)
Approved for use through 03/31/2021. OMB 0651-0035
U.S. Patent and Trademark Office; U.S. DEPARTMENT OF COMMERCE
Under the Paperwork Reduction Act of 1995, no persons are required to respond to a collection of information unless it displays a valid OMB control number.

TRANSMITTAL FOR POWER OF ATTORNEY TO ONE OR MORE REGISTERED PRACTITIONERS

NOTE: This form is to be submitted with the Power of Attorney by Applicant form (PTO/AIA/82B) to identify the application to which the Power of Attorney is directed, in accordance with 37 CFR 1.5, unless the application number and filing date are identified in the Power of Attorney by Applicant form. If neither form PTO/AIA/82A nor form PTO/AIA82B identifies the application to which the Power of Attorney is directed, the Power of Attorney will not be recognized in the application.

Application Number	
Filing Date	25 November 2019
First Named Inventor	Steven J. Altamura
Title	RESISTIVE BYPASS FOR SERIES LIGHTING CIRCUIT
Art Unit	
Examiner Name	
Attorney Docket Number	40617.0493USC4

SIGNATURE of Applicant or Patent Practitioner

Signature	/Michael Lasky/	Date (Optional)	25 November 2019
Name	Michael B. Lasky	Registration Number	29555
Title (if Applicant is a juristic entity)			
Applicant Name (if Applicant is a juristic entity)			

NOTE: This form must be signed in accordance with 37 CFR 1.33. See 37 CFR 1.4(d) for signature requirements and certifications. If more than one applicant, use multiple forms.

☑ *Total of 1 forms are submitted.

This collection of information is required by 37 CFR 1.131, 1.32, and 1.33. The information is required to obtain or retain a benefit by the public which is to file (and by the USPTO to process) an application. Confidentiality is governed by 35 U.S.C. 122 and 37 CFR 1.11 and 1.14. This collection is estimated to take 3 minutes to complete, including gathering, preparing, and submitting the completed application form to the USPTO. Time will vary depending upon the individual case. Any comments on the amount of time you require to complete this form and/or suggestions for reducing this burden, should be sent to the Chief Information Officer, U.S. Patent and Trademark Office, U.S. Department of Commerce, P.O. Box 1450, Alexandria, VA 22313-1450. DO NOT SEND FEES OR COMPLETED FORMS TO THIS ADDRESS. **SEND TO: Commissioner for Patents, P.O. Box 1450, Alexandria, VA 22313-1450.**

If you need assistance in completing the form, call 1-800-PTO-9199 and select option 2.

Doc Code: PA..
Document Description: Power of Attorney

PTO/AIA/82B (07-13)
Approved for use through 03/31/2021. OMB 0651-0035
U.S. Patent and Trademark Office; U.S. DEPARTMENT OF COMMERCE
Under the Paperwork Reduction Act of 1995, no persons are required to respond to a collection of information unless it displays a valid OMB control number

POWER OF ATTORNEY BY APPLICANT

I hereby revoke all previous powers of attorney given in the application identified in either the attached transmittal letter or the boxes below.

Application Number	Filing Date

(Note: The boxes above may be left blank if information is provided on form PTO/AIA/82A.)

☑ I hereby appoint the Patent Practitioner(s) associated with the following Customer Number as my/our attorney(s) or agent(s), and to transact all business in the United States Patent and Trademark Office connected therewith for the application referenced in the attached transmittal letter (form PTO/AIA/82A) or identified above: 52835

OR

☐ I hereby appoint Practitioner(s) named in the attached list (form PTO/AIA/82C) as my/our attorney(s) or agent(s), and to transact all business in the United States Patent and Trademark Office connected therewith for the patent application referenced in the attached transmittal letter (form PTO/AIA/82A) or identified above. (Note: Complete form PTO/AIA/82C.)

Please recognize or change the correspondence address for the application identified in the attached transmittal letter or the boxes above to:

☑ The address associated with the above-mentioned Customer Number

OR

☐ The address associated with Customer Number:

OR

☐ Firm or Individual Name					
Address					
City		State		Zip	
Country					
Telephone		Email			

I am the Applicant (if the Applicant is a juristic entity, list the Applicant name in the box):

Seasonal Specialties, LLC

☐ Inventor or Joint Inventor (title not required below)

☐ Legal Representative of a Deceased or Legally Incapacitated Inventor (title not required below)

☑ Assignee or Person to Whom the Inventor is Under an Obligation to Assign (provide signer's title if applicant is a juristic entity)

☐ Person Who Otherwise Shows Sufficient Proprietary Interest (e.g., a petition under 37 CFR 1.46(b)(2) was granted in the application or is concurrently being filed with this document) (provide signer's title if applicant is a juristic entity)

SIGNATURE of Applicant for Patent

The undersigned (whose title is supplied below) is authorized to act on behalf of the applicant (e.g., where the applicant is a juristic entity).

Signature		Date (Optional)	
Name	David Fagerlee, Jr.		
Title	President		

NOTE: Signature - This form must be signed by the applicant in accordance with 37 CFR 1.33. See 37 CFR 1.4 for signature requirements and certifications. If more than one applicant, use multiple forms.

☑ Total of 1 forms are submitted.

This collection of information is required by 37 CFR 1.131, 1.32, and 1.33. The information is required to obtain or retain a benefit by the public which is to file (and by the USPTO to process) an application. Confidentiality is governed by 35 U.S.C. 122 and 37 CFR 1.11 and 1.14. This collection is estimated to take 3 minutes to complete, including gathering, preparing, and submitting the completed application form to the USPTO. Time will vary depending upon the individual case. Any comments on the amount of time you require to complete this form and/or suggestions for reducing this burden, should be sent to the Chief Information Officer, U.S. Patent and Trademark Office, U.S. Department of Commerce, P.O. Box 1450, Alexandria, VA 22313-1450. DO NOT SEND FEES OR COMPLETED FORMS TO THIS ADDRESS. SEND TO: Commissioner for Patents, P.O. Box 1450, Alexandria, VA 22313-1450.

If you need assistance in completing the form, call 1-800-PTO-9199 and select option 2.

PTO/AIA/01 (06-12)
Approved for use through 01/31/2014. OMB 0651-0032
U.S. Patent and Trademark Office, U.S. DEPARTMENT OF COMMERCE
Under the Paperwork Reduction Act of 1995, no persons are required to respond to a collection of information unless it displays a valid OMB control number.

DECLARATION (37 CFR 1.63) FOR UTILITY OR DESIGN APPLICATION USING AN APPLICATION DATA SHEET (37 CFR 1.76)

Title of Invention	RESISTIVE BYPASS FOR SERIES LIGHTING CIRCUIT

As the below named inventor, I hereby declare that:

This declaration is directed to:

☐ The attached application, or

☒ United States application or PCT international application number 15/899264 filed on 19 February 2018.

The above-identified application was made or authorized to be made by me.

I believe that I am the original inventor or an original joint inventor of a claimed invention in the application.

I hereby acknowledge that any willful false statement made in this declaration is punishable under 18 U.S.C. 1001 by fine or imprisonment of not more than five (5) years, or both.

WARNING:

Petitioner/applicant is cautioned to avoid submitting personal information in documents filed in a patent application that may contribute to identity theft. Personal information such as social security numbers, bank account numbers, or credit card numbers (other than a check or credit card authorization form PTO-2038 submitted for payment purposes) is never required by the USPTO to support a petition or an application. If this type of personal information is included in documents submitted to the USPTO, petitioners/applicants should consider redacting such personal information from the documents before submitting them to the USPTO. Petitioner/applicant is advised that the record of a patent application is available to the public after publication of the application (unless a non-publication request in compliance with 37 CFR 1.213(a) is made in the application) or issuance of a patent. Furthermore, the record from an abandoned application may also be available to the public if the application is referenced in a published application or an issued patent (see 37 CFR 1.14). Checks and credit card authorization forms PTO-2038 submitted for payment purposes are not retained in the application file and therefore are not publicly available.

LEGAL NAME OF INVENTOR

Inventor: Steven J. Altamura Date (Optional) :

Signature:

Note: An application data sheet (PTO/SB/14 or equivalent), including naming the entire inventive entity, must accompany this form or must have been previously filed. Use an additional PTO/AIA/01 form for each additional inventor.

This collection of information is required by 35 U.S.C. 115 and 37 CFR 1.63. The information is required to obtain or retain a benefit by the public which is to file (and by the USPTO to process) an application. Confidentiality is governed by 35 U.S.C. 122 and 37 CFR 1.11 and 1.14. This collection is estimated to take 1 minute to complete, including gathering, preparing, and submitting the completed application form to the USPTO. Time will vary depending upon the individual case. Any comments on the amount of time you require to complete this form and/or suggestions for reducing this burden, should be sent to the Chief Information Officer, U.S. Patent and Trademark Office, U.S. Department of Commerce, P.O. Box 1450, Alexandria, VA 22313-1450. DO NOT SEND FEES OR COMPLETED FORMS TO THIS ADDRESS. **SEND TO: Commissioner for Patents, P.O. Box 1450, Alexandria, VA 22313-1450.**

If you need assistance in completing the form, call 1-800-PTO-9199 and select option 2

IN THE UNITED STATES PATENT AND TRADEMARK OFFICE

Applicant:	Steven J. Altamura	Examiner:	TBD
Serial No.:	TO BE ASSIGNED	Group Art Unit:	TO BE ASSIGNED
Filed:	November 25, 2019	Docket No.:	40617.0493-US-C4
Title:	RESISTIVE BYPASS FOR SERIES LIGHTING CIRCUIT		

PRELIMINARY AMENDMENT

Mail Stop Patent Application
Commissioner for Patents
P.O. Box 1450
Alexandria, VA 22313-1450

Dear Sir:

Please enter the following preliminary amendment into the above-referenced application.

Amendments to the Claims begin on page 2 of this paper.

Amendments to the Drawings begin on page 5 of this paper.

Remarks begin on page 6 of this paper.

AMENDMENTS TO THE CLAIMS

This listing of claims will replace all prior versions, and listings, of claims in the application.

1. (Original) A resistor bypass circuit for a series lighting circuit comprising a plurality of serially connected light sources and a bypass resistor being connected in parallel with at least one of the respective light sources, each respective light source low wattage and being capable operating on a one hundred percent duty cycle as desired.

2. (Original) The resistor bypass circuit of claim 1, where the circuit is series-parallel connected.

3. (Original) The resistor bypass circuit of claim 1, the light source being an incandescent bulb.

4. (Original) The resistor bypass circuit of claim 1, the light source being a semiconductor

5. (Original) The resistor bypass circuit of claim 1, the light source being an LED.

6. (Original) The resistor bypass circuit of claim 4, the light source the semiconductor light source providing a twinkling effect.

7. (Original) The resistor bypass circuit of claim 6, the semiconductor light source utilizing electronic circuits that control the flashing rate of the light source, which would only affect the individual lighting element as the resistive bypass would allow current to continue to flow in remaining lighting elements in the series circuit.

8. (Original) The resistor bypass circuit of claim 6, the electronic circuits being LED packages that incorporate integrated circuits (ICs)

9. (Original) The resistor bypass circuit of claim 5, the light source being a semiconductor light source for providing color changing characteristics.

10. (Original) The resistor bypass circuit of claim 9, the semiconductor light source utilizing LED packages that incorporate two or more LED chips, and an integrated circuit (IC), the integrated circuit controlling each LED chip in respective LED packages independently.

11. (Original) The resistor bypass circuit of claim 10, the IC controlling the current and/or voltage to the individual LED chips in the LED package, the control providing for the mixing of the LED chip colors to get various resultant colors.

12. (Original) The resistor bypass circuit of claim 11, the control only affecting individual lighting element, the bypass resistor providing for current continuing to flow in remaining lighting elements in the series circuit.

13. (Original) The resistor bypass circuit of claim 1, a respective resistive bypass resistor being connected in parallel with more than one light source, the failure of one of the light sources thereby only affecting a limited number of the plurality of light sources.

14. (Original) The resistor bypass circuit of claim 1 being utilized in AC or DC circuits powered form a power source selected from the list consisting of batteries, step down transformers, AC utility power, or converters from AC to DC or DC to AC power, pulsed DC, and filtered or unfiltered DC, or partially filtered AC.

15. (Original) A resistor bypass circuit for a series lighting circuit comprising a plurality of serially connected incandescent light sources and a bypass resistor being connected in parallel with at least one of the respective light sources, each respective light source being low wattage when conducting and being capable operating on a one hundred percent duty cycle as desired.

16. (Original) The resistor bypass circuit of claim 15, where the circuit is series-parallel connected.

17. (Original) A method of forming a resistor bypass circuit for a series lighting circuit comprising serially connecting a plurality of light sources, connecting a bypass resistor in parallel with at least one of the respective light sources, and to be capable of operating on a one hundred percent duty cycle as desired.

18. (Original) The method of claim 17, including forming the light source of an incandescent bulb.

19. (Original) The method of claim 17, including forming the light source of a semiconductor

20. (Original) The method of claim 19, including forming the light source of an LED.

21. (Cancelled).

22. (Cancelled).

23. (Cancelled).

24. (Cancelled).

25. (Cancelled).

AMENDMENTS TO THE DRAWINGS

The attached Replacement sheets of drawings are formalized drawings for the filing of this continuation application. These Replacement sheets of drawings replace all previously filed drawings. No new matter has been added.

Attachment: Replacement Sheets

REMARKS

The above preliminary amendment is made to cancel Claims 21-25 for this Continuation application filing.

Applicant respectfully requests that this preliminary amendment be entered into the record prior to calculation of the filing fee and prior to examination and consideration of the above-identified application.

If a telephone conference would be helpful in resolving any issues concerning this communication, please contact Applicant's attorney of record, Michael B. Lasky at (952) 253-4106.

Respectfully submitted,

Hamre, Schumann, Mueller & Larson, P.C.

Customer No. 52835

Date: November 25, 2019 By: /Michael Lasky/

Michael B. Lasky
Reg. No. 29,555
MBL/jsa

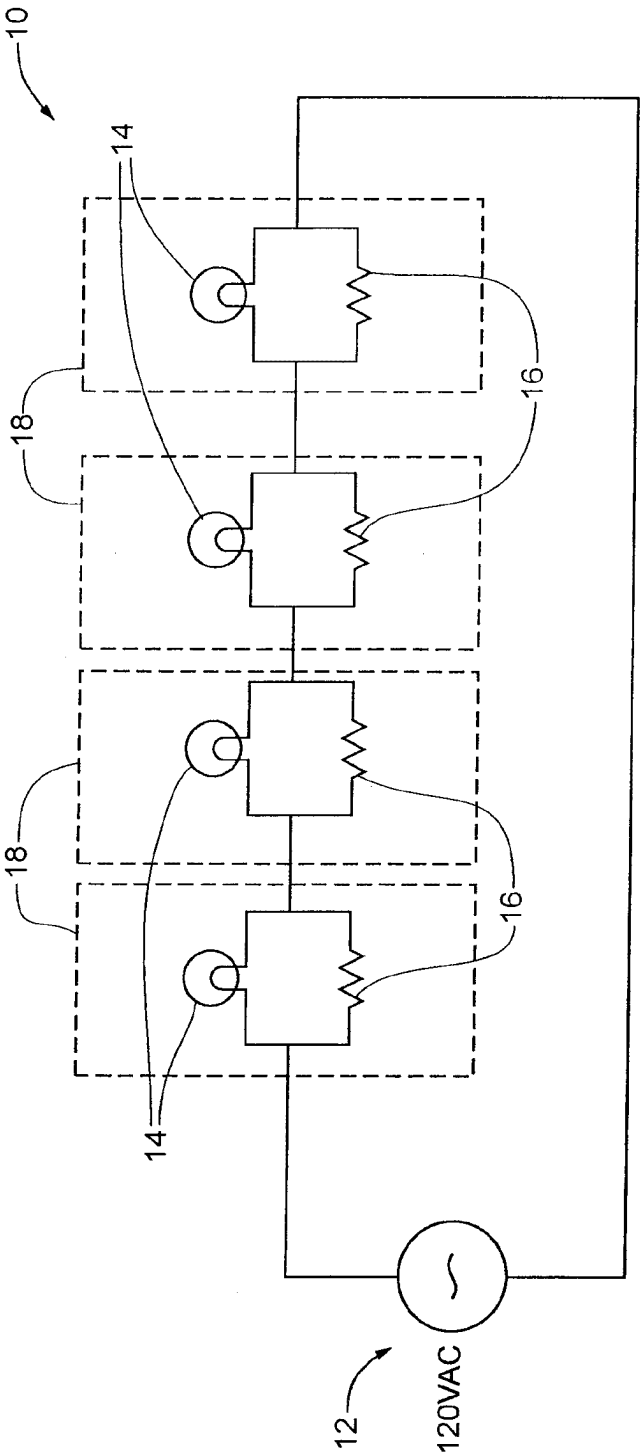

Fig. 1

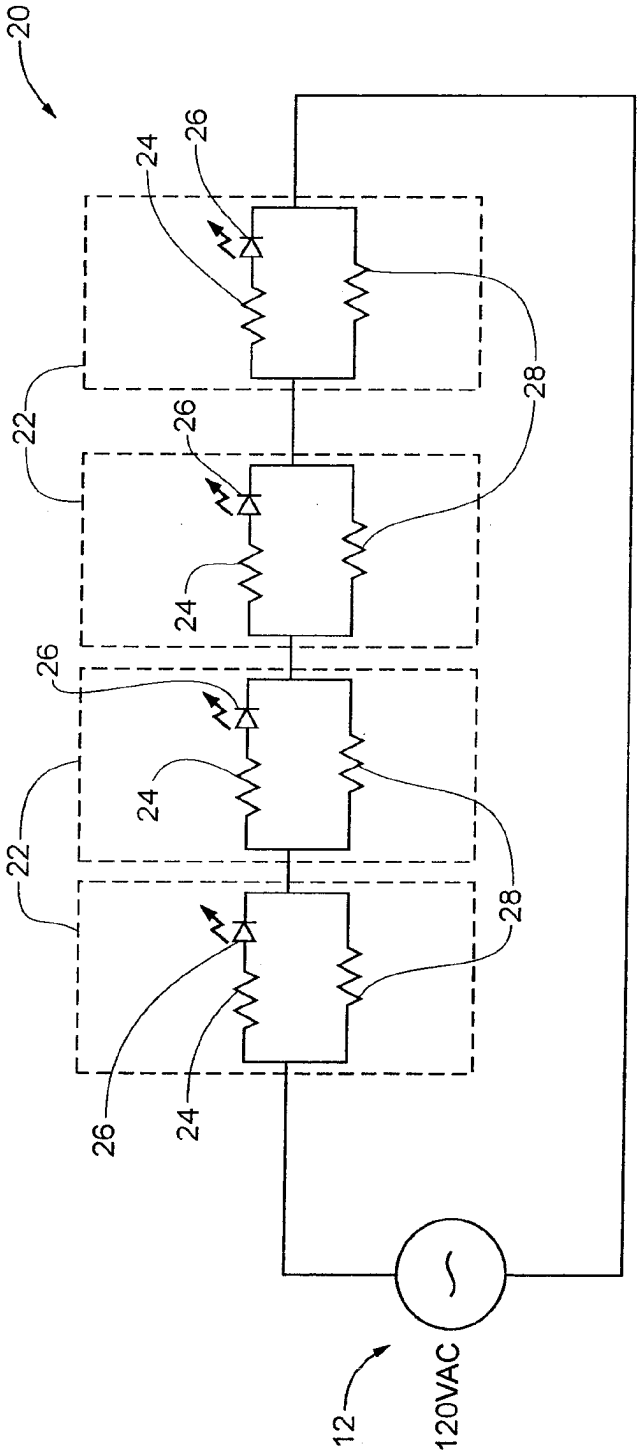

Fig. 2

Fig. 2a

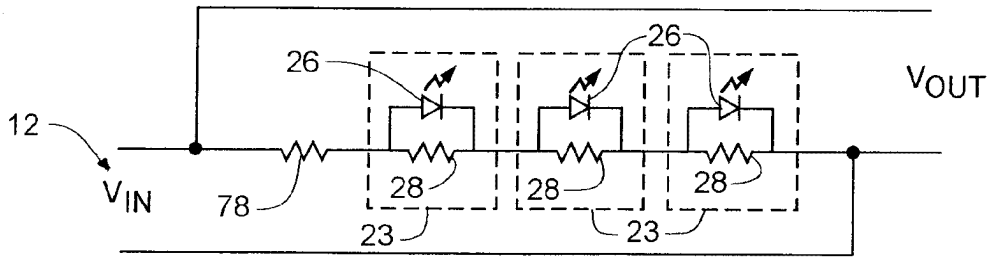
20
26
26
12
V_{OUT}
V_{IN}
78
28
28
28
23
23

Fig. 2b

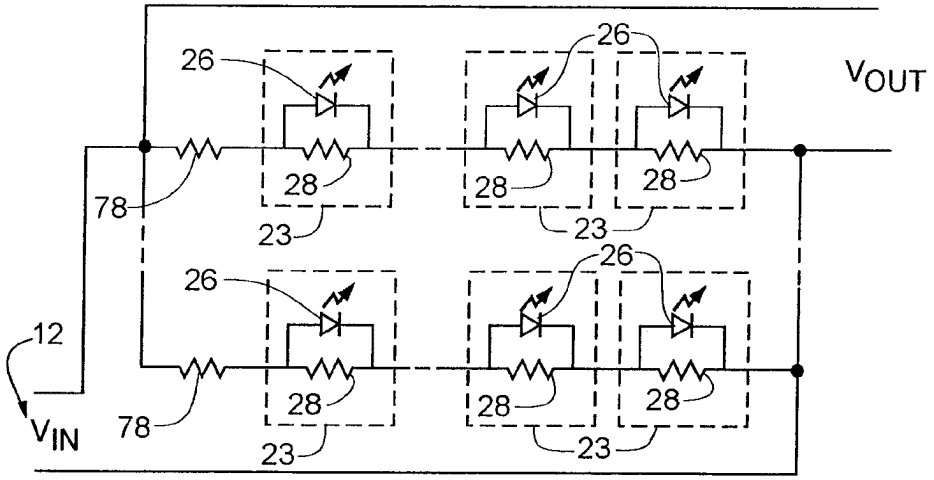
20
26
26
V_{OUT}
78
28
28
28
23
23
26
26
12
V_{IN}
78
28
28
28
23
23

Fig. 2c

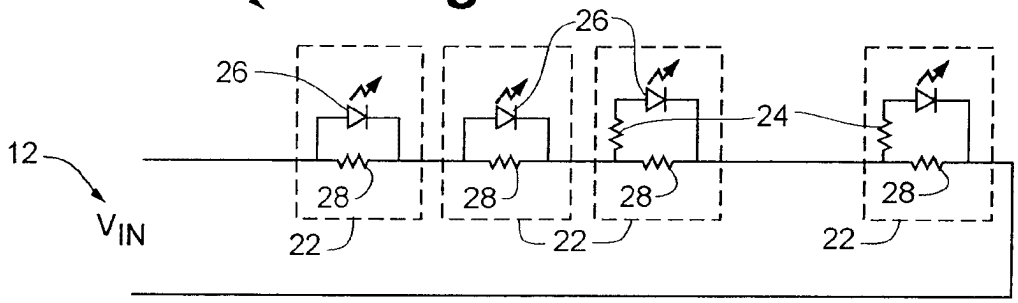
20
26
26
24
12
28
28
28
28
V_{IN}
22
22
22

Fig. 2d

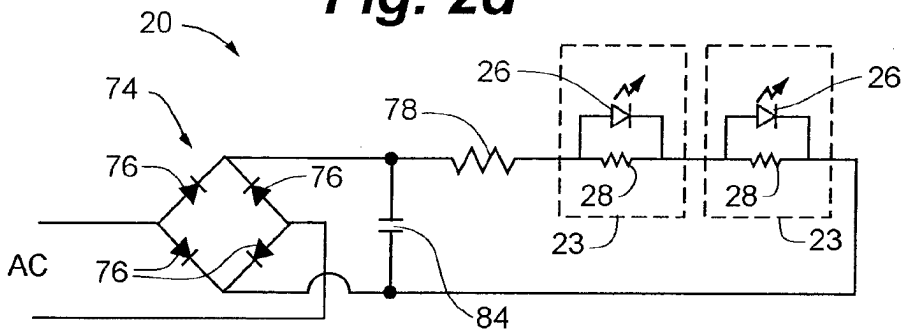
20
74
26
26
78
76
76
28
28
23
23
AC
76
84

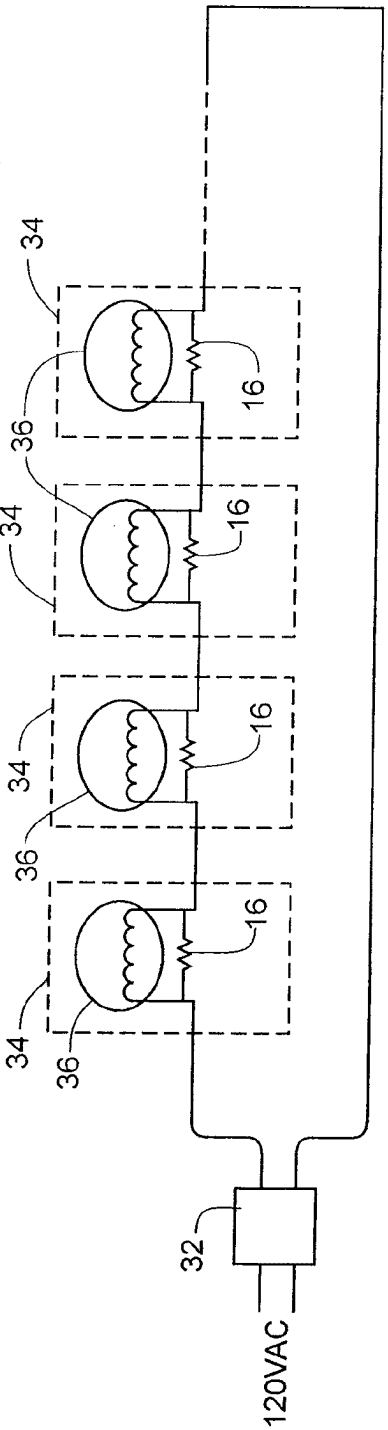

Fig. 3

Fig. 4a

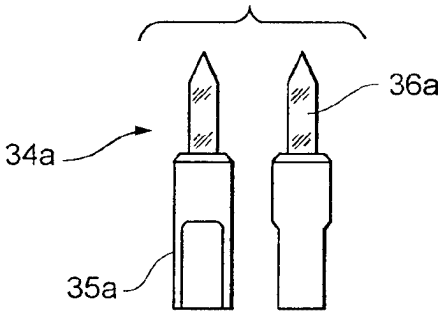

Fig. 4b

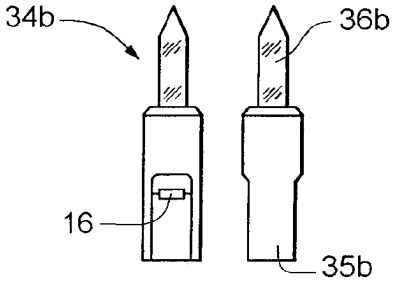

Fig. 4c

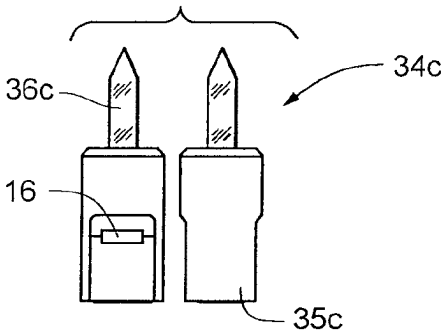

Fig. 4d

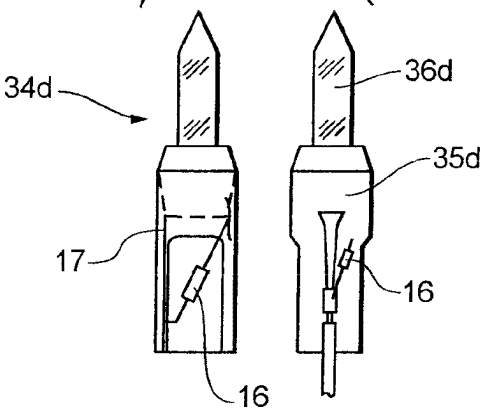

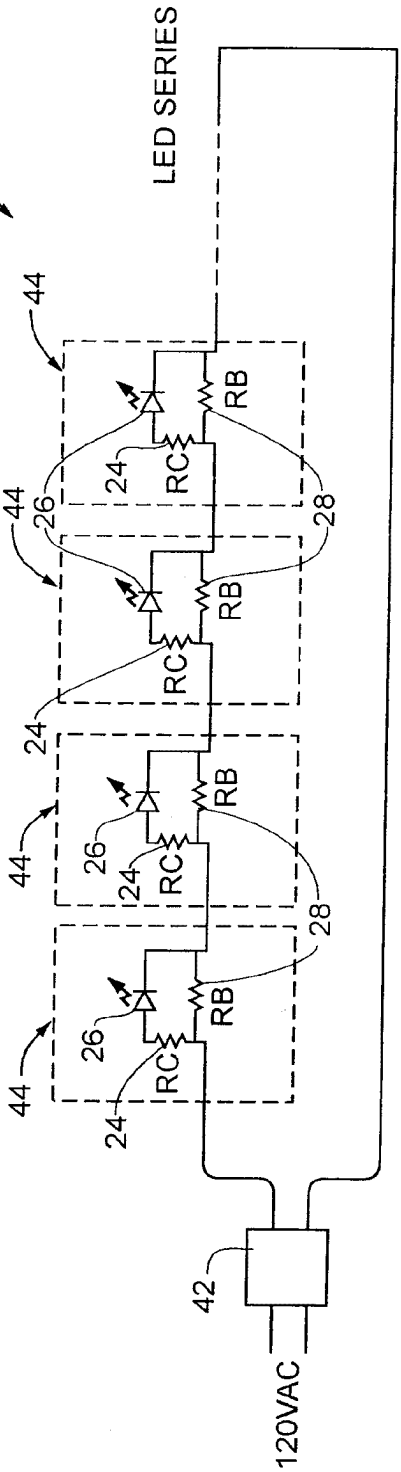

Fig. 5

Fig. 6

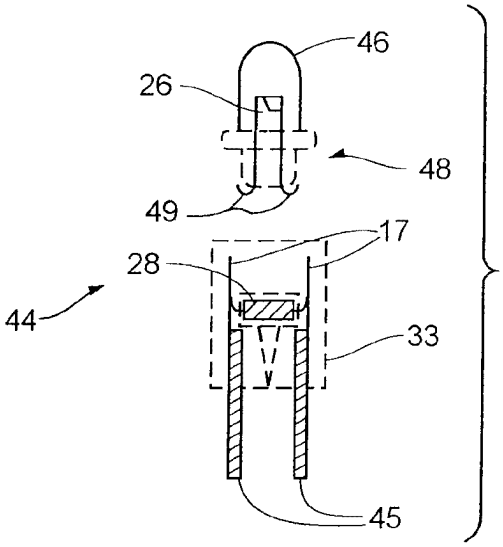

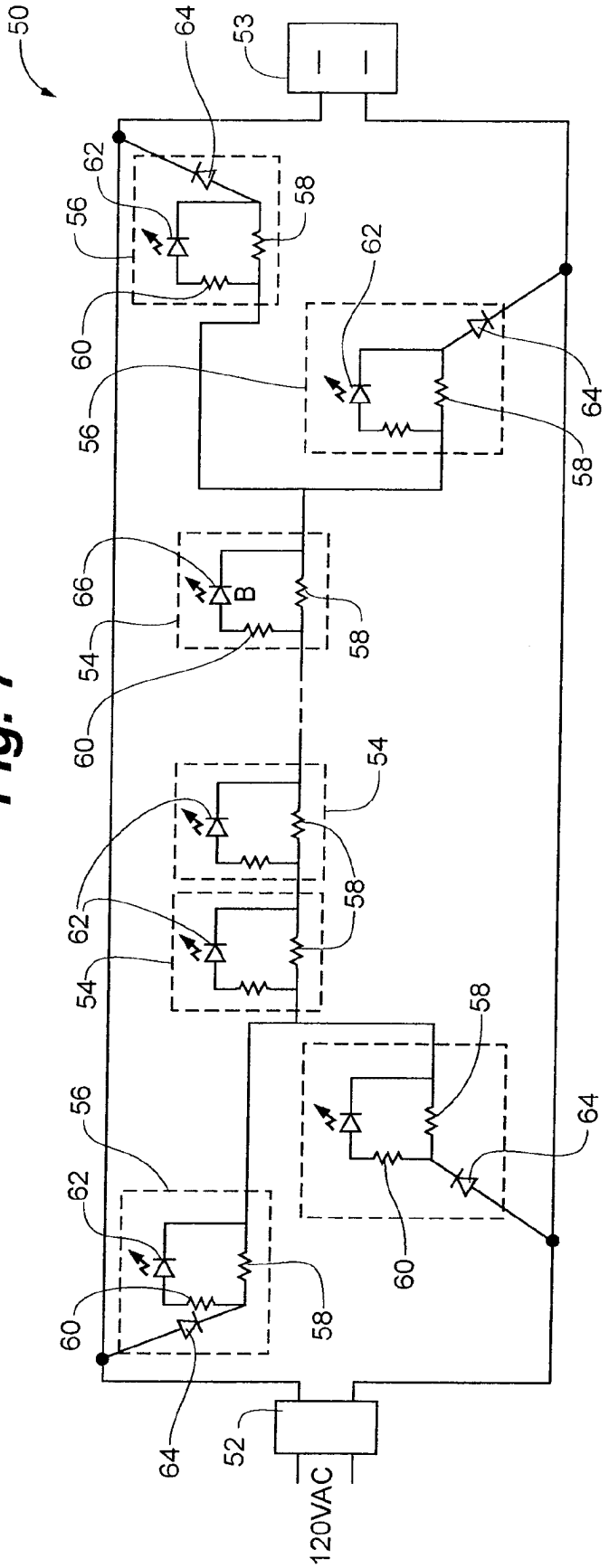

Fig. 7

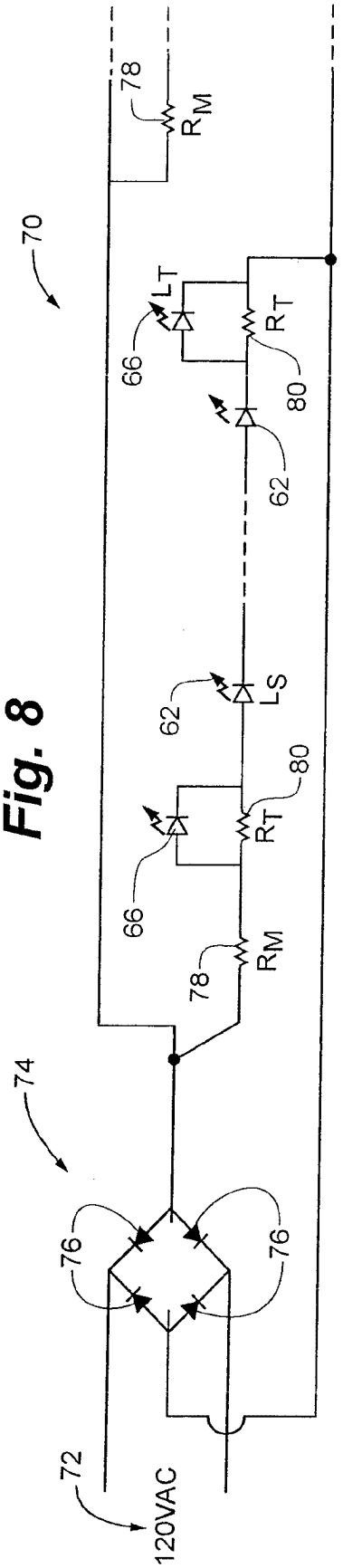

Fig. 8

Fig. 9

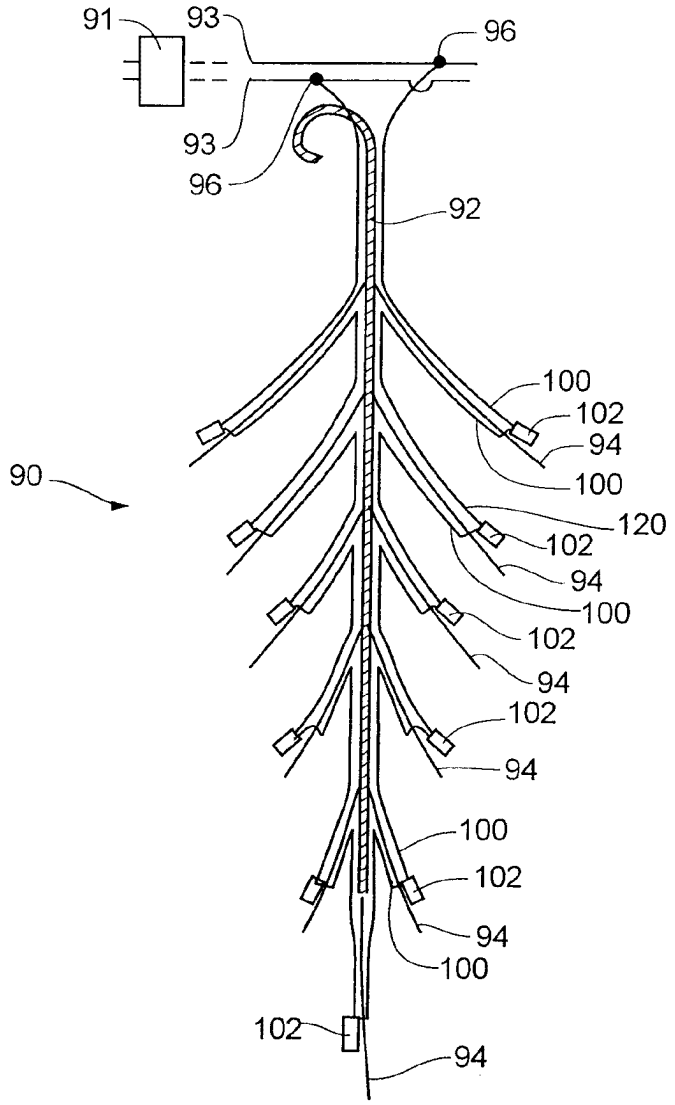
91
93
96
93
96
92
100
102
94
100
90
120
102
94
100
102
94
102
94
100
102
94
100
102
94

Fig. 10

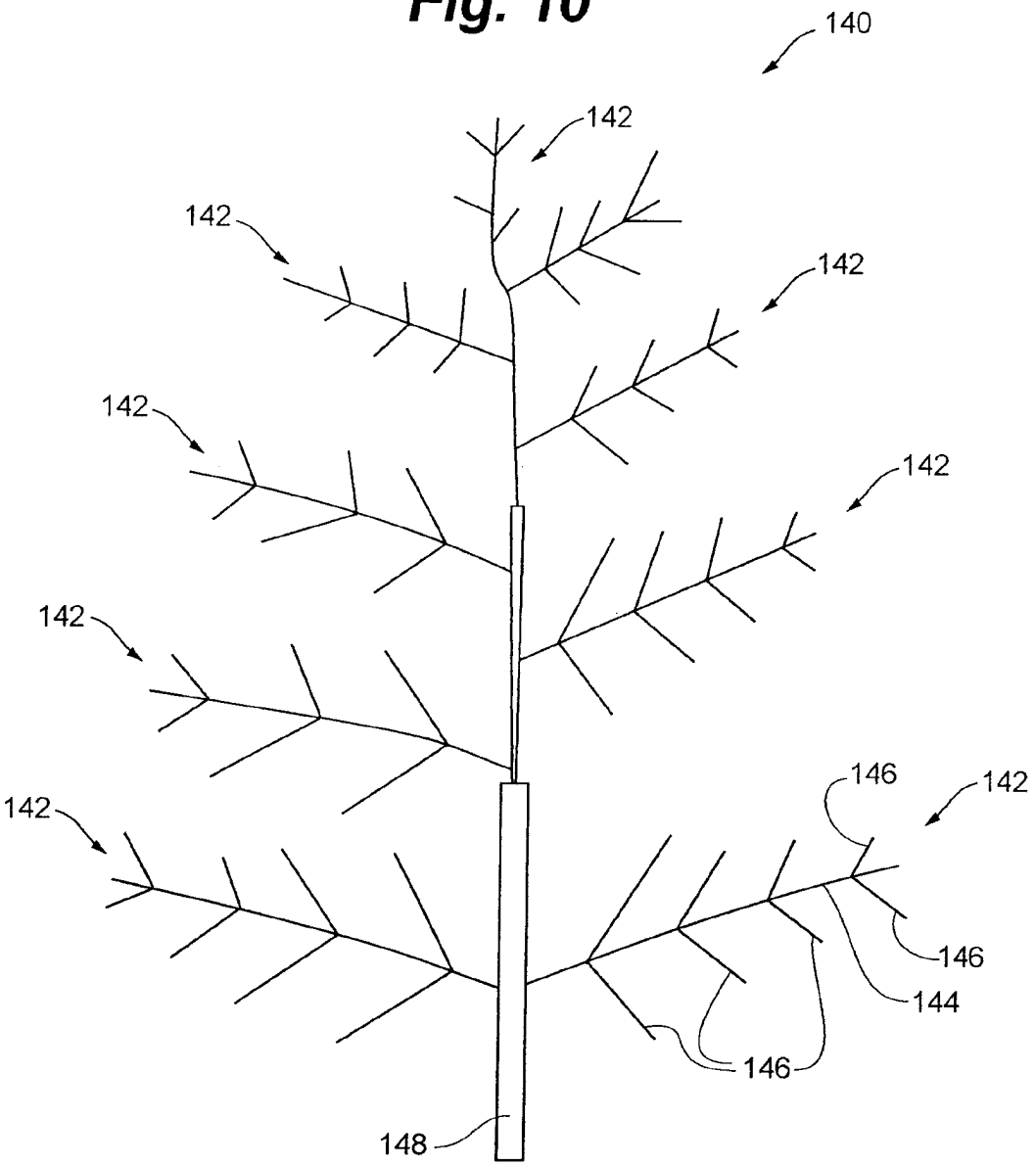

Fig. 11

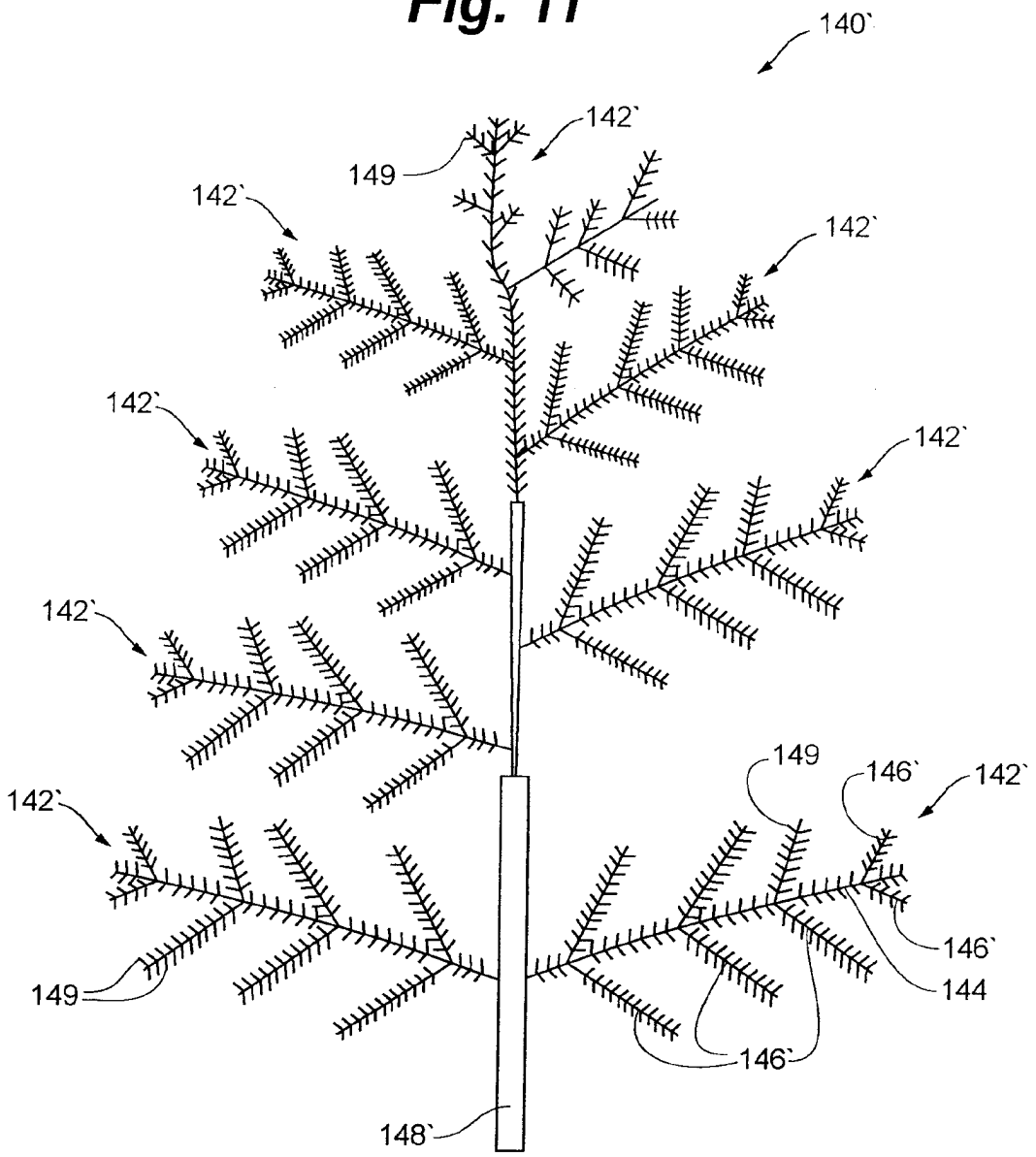
140`
142`
149
142`
142`
142`
142`
142`
142`
142`
149
146`
142`
146`
144
149
146`
148`

Fig. 12

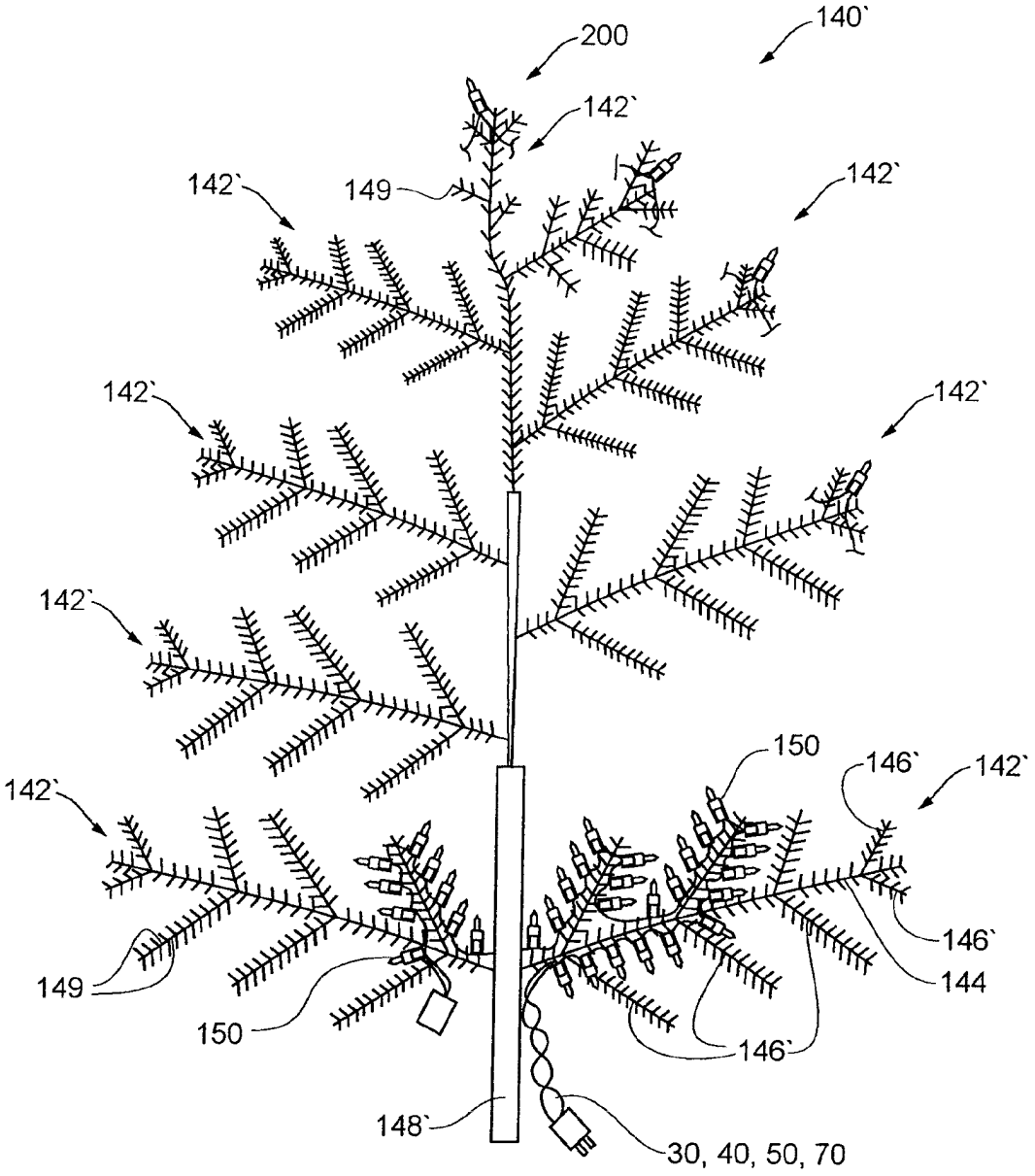
140`
200
142`
142`
149
142`
142`
142`
142`
142`
150
146`
142`
146`
149
144
150
146`
148`
30, 40, 50, 70

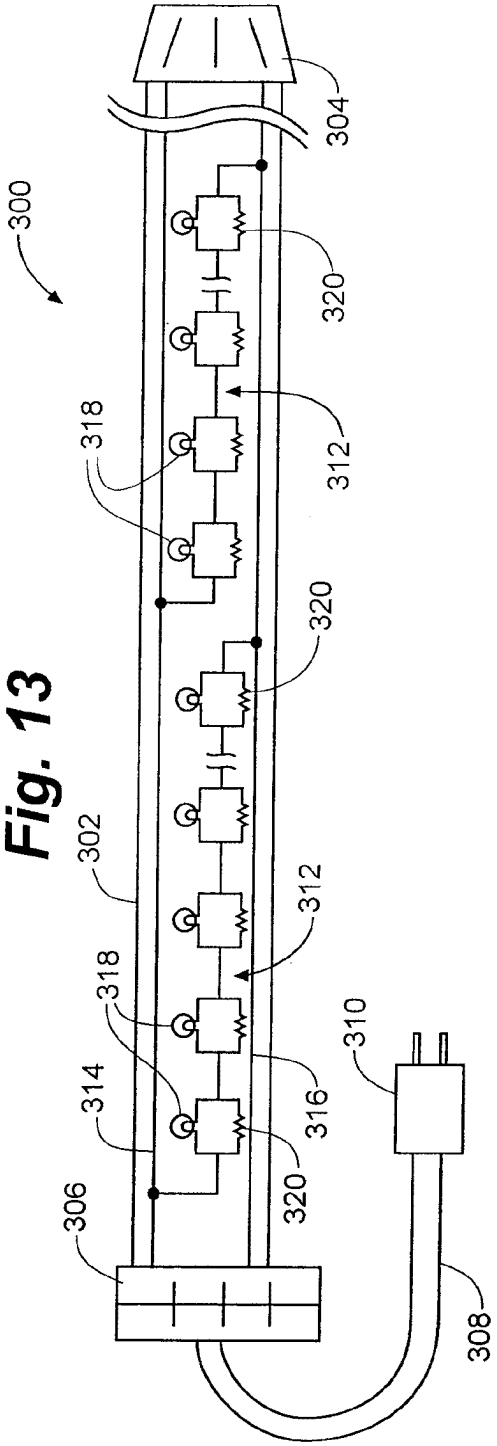
300
304
320
318
312
320
302
312
318
310
314
316
320
306
308

Fig. 13

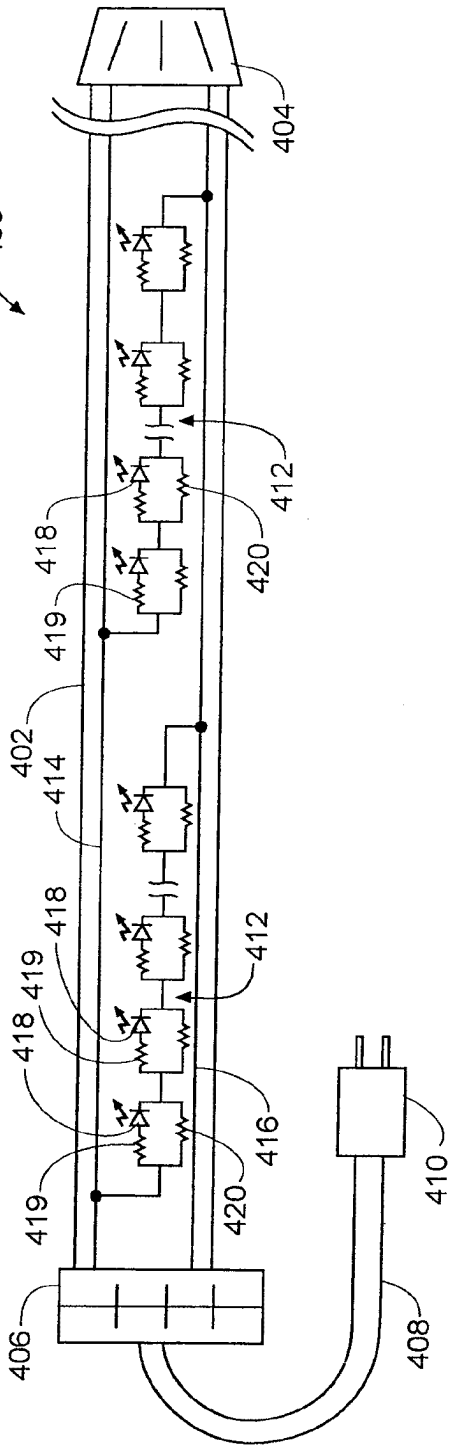
400
404
412
418
420
419
402
414
418
412
419
418
416
419
420
406
410
408

Fig. 14

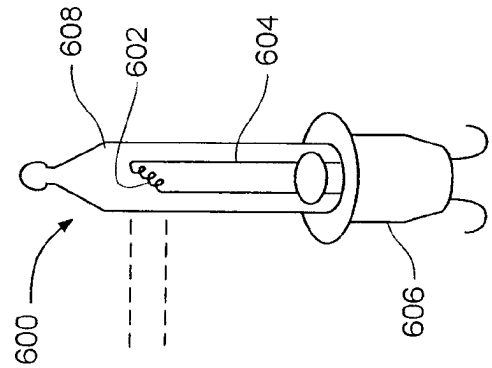

Fig. 17

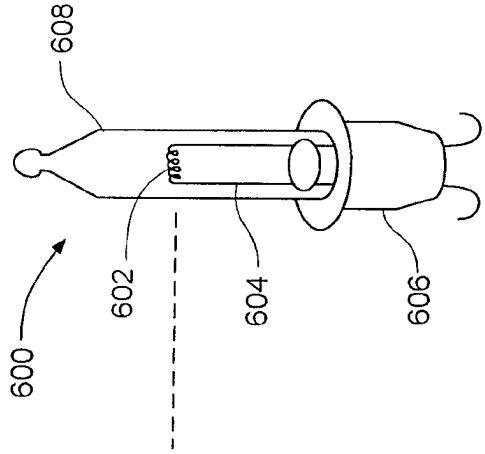

Fig. 16

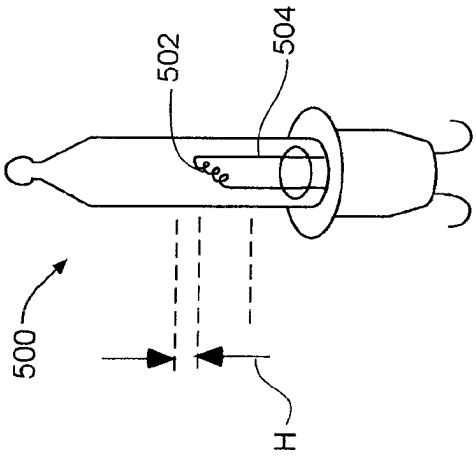

Fig. 15
PRIOR ART

PTO/SB/413C (05-11)
Approved for use through 11/30/2020. OMB 0651-0031
U.S. Patent and Trademark Office; U. S. DEPARTMENT OF COMMERCE
Under the Paperwork Reduction Act of 1995, no persons are required to respond to a collection of information unless it displays a valid OMB control number.

REQUEST FOR FIRST ACTION INTERVIEW (FULL PILOT PROGRAM)

Attorney Docket Number: 40617.0493USC4	Application Number (if known):	Filing date: 25 November 2019
First Named Inventor: Steven J. Altamura	Title: RESISTIVE BYPASS FOR SERIES LIGHTING CIRCUIT	

APPLICANT HEREBY REQUESTS A FIRST ACTION INTERVIEW IN THE ABOVE-IDENTIFIED APPLICATION. See Instruction Sheet on page 2.

1. The application must contain three (3) or fewer independent claims and twenty (20) or fewer total claims.

2. The application must not contain any multiple dependent claims.

3. By filing this request:

   Applicant is agreeing to make an election without traverse if the Office determines that the claims are not obviously directed to a single invention; and

   Applicant is agreeing not to request for a refund of the search fee and any excess claims fee paid in the application after the mailing or notification of the pre-interview communication prepared by the examiner.

4. Other attachments: _____

Signature /Michael Lasky/	Date 25 November 2019
Name (Print/Typed) Michael B. Lasky	Registration Number 29555

Note: *This form must be signed in accordance with 37 CFR 1.33. See 37 CFR 1.4(d) for signature requirements and certifications. Submit multiple forms if more than one signature is required, see below*.*

☒ *Total of 1 forms are submitted.

The information is required to obtain or retain a benefit by the public which is to file (and by the USPTO to process) an application. Confidentiality is governed by 35 U.S.C. 122 and 37 CFR 1.11 and 1.14. This collection is estimated to take 12 hours to complete, including gathering, preparing, and submitting the completed application form to the USPTO. Time will vary depending upon the individual case. Any comments on the amount of time you require to complete this form and/or suggestions for reducing this burden, should be sent to the Chief Information Officer, U.S. Patent and Trademark Office, U.S. Department of Commerce, P.O. Box 1450, Alexandria, VA 22313-1450. DO NOT SEND FEES OR COMPLETED FORMS TO THIS ADDRESS. **SEND TO: Commissioner for Patents, P.O. Box 1450, Alexandria, VA 22313-1450.**

If you need assistance in completing the form, call 1-800-PTO-9199 and select option 2.

Privacy Act Statement

The **Privacy Act of 1974 (P.L. 93-579)** requires that you be given certain information in connection with your submission of the attached form related to a patent application or patent. Accordingly, pursuant to the requirements of the Act, please be advised that: (1) the general authority for the collection of this information is 35 U.S.C. 2(b)(2); (2) furnishing of the information solicited is voluntary; and (3) the principal purpose for which the information is used by the U.S. Patent and Trademark Office is to process and/or examine your submission related to a patent application or patent. If you do not furnish the requested information, the U.S. Patent and Trademark Office may not be able to process and/or examine your submission, which may result in termination of proceedings or abandonment of the application or expiration of the patent.

The information provided by you in this form will be subject to the following routine uses:

1. The information on this form will be treated confidentially to the extent allowed under the Freedom of Information Act (5 U.S.C. 552) and the Privacy Act (5 U.S.C 552a). Records from this system of records may be disclosed to the Department of Justice to determine whether disclosure of these records is required by the Freedom of Information Act.

2. A record from this system of records may be disclosed, as a routine use, in the course of presenting evidence to a court, magistrate, or administrative tribunal, including disclosures to opposing counsel in the course of settlement negotiations.

3. A record in this system of records may be disclosed, as a routine use, to a Member of Congress submitting a request involving an individual, to whom the record pertains, when the individual has requested assistance from the Member with respect to the subject matter of the record.

4. A record in this system of records may be disclosed, as a routine use, to a contractor of the Agency having need for the information in order to perform a contract. Recipients of information shall be required to comply with the requirements of the Privacy Act of 1974, as amended, pursuant to 5 U.S.C. 552a(m).

5. A record related to an International Application filed under the Patent Cooperation Treaty in this system of records may be disclosed, as a routine use, to the International Bureau of the World Intellectual Property Organization, pursuant to the Patent Cooperation Treaty.

6. A record in this system of records may be disclosed, as a routine use, to another federal agency for purposes of National Security review (35 U.S.C. 181) and for review pursuant to the Atomic Energy Act (42 U.S.C. 218(c)).

7. A record from this system of records may be disclosed, as a routine use, to the Administrator, General Services, or his/her designee, during an inspection of records conducted by GSA as part of that agency's responsibility to recommend improvements in records management practices and programs, under authority of 44 U.S.C. 2904 and 2906. Such disclosure shall be made in accordance with the GSA regulations governing inspection of records for this purpose, and any other relevant (*i.e.*, GSA or Commerce) directive. Such disclosure shall not be used to make determinations about individuals.

8. A record from this system of records may be disclosed, as a routine use, to the public after either publication of the application pursuant to 35 U.S.C. 122(b) or issuance of a patent pursuant to 35 U.S.C. 151. Further, a record may be disclosed, subject to the limitations of 37 CFR 1.14, as a routine use, to the public if the record was filed in an application which became abandoned or in which the proceedings were terminated and which application is referenced by either a published application, an application open to public inspection or an issued patent.

9. A record from this system of records may be disclosed, as a routine use, to a Federal, State, or local law enforcement agency, if the USPTO becomes aware of a violation or potential violation of law or regulation.

IN THE UNITED STATES PATENT AND TRADEMARK OFFICE

Applicant:	Steven J. Altamura	Examiner:	TBD
Serial No.:	To be Assigned	Group Art Unit:	TBD
Filed:	November 25, 2019	Docket No.:	00617.0493-US-C4
Title:	RESISTIVE BYPASS FOR SERIES LIGHTING CIRCUIT		

INFORMATION DISCLOSURE STATEMENT UNDER 37 C.F.R.§1.97(b)

Mail Stop Patent application
Commissioner for Patents
P.O. Box 1450
Alexandria, VA 22313-1450

Dear Sir:

Applicant(s) respectfully submit(s) the items of information on the enclosed Form 1449 for the attention of the Examiner in the above-identified application.

This Information Disclosure Statement is being filed within three months of the filing of a national application other than a continued prosecution application under 37 C.F.R. 1.53(d); within three months of the date of entry of the national stage as set forth in 37 C.F.R. 1.491 in an international application; before the mailing date of a first Office Action on the merits, or before the mailing of a first Office Action after the filing of a request for continued examination under 37 C.F.R. 1.114. Accordingly, no fee is due for consideration of the items listed on the enclosed Form 1449.

A copy of each document or other information listed on the enclosed Form 1449 is enclosed in accordance with 37 C.F.R. §1.98(a)(2) and/or a copy of each document is not provided because it was previously cited by or submitted to the U.S. Patent and Trademark Office in a parent application in accordance with 37 C.F.R. §.1.98(d).

No representation is made that a reference is "prior art" within the meaning of 35 U.S.C. §§102 and 103. In addition, Applicant(s) do(es) not represent that a reference has been thoroughly reviewed or that any relevance of any portion of a reference is intended, and reserve the right to establish otherwise under 37 C.F.R. §1.131 or others.

Consideration of the items listed is respectfully requested. According to M.P.E.P. §609, Applicant(s) request(s) that the Examiner return a copy of the attached Form 1449, marked as being considered and initialed by the Examiner, to the undersigned with the next official communication.

Authorization is hereby given to charge any additional fees or credit any overpayments that may be deemed necessary to Deposit Account Number 50-3478.

Respectfully submitted,

Hamre, Schumann, Mueller & Larson, P.C.

Customer No. 52835

Date: November 25, 2019 By: /Michael Lasky/

Michael B. Lasky
Reg. No. 29,555
MBL/jsa

INFORMATION DISCLOSURE STATEMENT PTO Form 1449	Docket Number 40617.0493USC4	Serial Number TBD
	Applicant(s) Steven J. Altamura	
	Filing Date November 25, 2019	Group Art Unit TBD

U.S. PATENT DOCUMENTS

EXAMINER INITIALS	REF	DOCUMENT NUMBER	DATE	NAME	CLASS	SUB-CLASS	FILING DATE (IF APPROPRIATE)
		1024495	04/30/1912	Booth			
		1868689	07/26/1932	Brander			
		2072337	03/02/1937	Kamm			
		2760120	08/21/1956	Fisherman			
		3345482	10/03/1967	Shih-Woo Lou			
		3912966	10/14/1975	Harnden, Jr.			
		4727449	02/23/1988	Fleck			
		4985001	01/15/1991	Nagai			
		5453664	09/26/1995	Harris			
		5777868	07/07/1998	Gibboney, Jr.			
		5886423	03/23/1999	Gershen et al.			
		6084357	07/04/2000	Janning			
		6283797	09/04/2001	Wu			
		6323597	11/27/2001	Janning			
		6344716	02/05/2002	Gibboney, Jr.			
		6580182	06/17/2003	Janning			
		6597125	07/22/2003	Janning			
		6765313	07/20/2004	Janning			
		6929383	08/16/2005	Janning			
		7042116	05/09/2006	Janning			
		7166968	01/23/2007	Janning			
		7178961	02/20/2007	Janning			
		7261458	08/28/2007	Janning			
		2003/0117021	06/26/2003	Janning			
		2005/0174065	08/11/2005	Janning			
		2005/0205971	09/22/2005	Janning			
		1510847	04/18/1922	Holder			
		1865689	06/25/1929	Brander			
		2152228	05/05/1937	Waters			
		2760120	10/26/1955	Fisherman			
		7342327	03/11/2008	Janning			
		6690103	02/2004	Uke			
		6555948	04/2003	Noll			
		4464600	08/1984	Kosmatka et al.			
		4463278	07/1984	Kosmatka et al.			
		3942063	03/1976	Winter et al.			
		3868230	02/1975	Krukonis			
		3461921	08/1969	Ackerman			
		3260888	07/1966	Webb			
		2145911	02/1939	Anderson Waldemar et al.			
		4629943	12/1986	Ponce, Jr.			
		7851981	12/14/2010	Altamura			
		9900968	02/20/2018	Altamura			
		2018/0199419	0712/2018	Altamura			

Examiner:	Date Considered:

Electronic Acknowledgement Receipt

EFS ID:	37844544
Application Number:	16693552
International Application Number:	
Confirmation Number:	8833
Title of Invention:	RESISTIVE BYPASS FOR SERIES LIGHTING CIRCUIT
First Named Inventor/Applicant Name:	Steven J. Altamura
Customer Number:	52835
Filer:	Michael B. Lasky/Jennifer Armstrong
Filer Authorized By:	Michael B. Lasky
Attorney Docket Number:	40617.0493USC4
Receipt Date:	25-NOV-2019
Filing Date:	
Time Stamp:	11:07:04
Application Type:	Utility under 35 USC 111(a)

Payment information:

Submitted with Payment	yes
Payment Type	DA
Payment was successfully received in RAM	$785
RAM confirmation Number	E2019AOB08020714
Deposit Account	
Authorized User	

The Director of the USPTO is hereby authorized to charge indicated fees and credit any overpayment as follows:

File Listing:

Document Number	Document Description	File Name	File Size(Bytes)/ Message Digest	Multi Part /.zip	Pages (if appl.)
1	Application Data Sheet	6170493ADS.pdf	1256428 4d1db619d592b49465b7dd75fc776d088ff729c0	no	9
Warnings:					
Information:					
2	Information Disclosure Statement (IDS) Form (SB08)	6170493IDS.pdf	234400 9fab8cc4a75ec3b43f0eb05d82df735059ac39cd	no	3
Warnings:					
Information:					
This is not an USPTO supplied IDS fillable form					
3	Preliminary Amendment	6170493PreAmd.pdf	105001 bf01f526a4f7368e7ae08f893419585bbba1191f	no	6
Warnings:					
Information:					
4	Drawings-only black and white line drawings	ReplacementDrawingsC4.pdf	334419 076fdaa14d44cd54ad0c0d6a2a74f14da4844edf	no	16
Warnings:					
Information:					
5		appC4.pdf	1594802 99349a0683aee1d0a4deca7720c3da76719b69a9	yes	45

Multipart Description/PDF files in .zip description

Document Description	Start	End
Specification	1	26
Claims	27	29

	Abstract		30	30	
	Drawings-only black and white line drawings		31	45	
Warnings:					
Information:					
6	First Action Interview - Enrollment Request	FAI40617493USC4.pdf	620381 a02ffe077559a1789a4aa569fa2a976eba3b04b1	no	2
Warnings:					
Information:					
7	Oath or Declaration filed	Dec.pdf	139578 ca7fbe16242e0cf5b2d9afb504a8b2bd3ae7c738	no	1
Warnings:					
Information:					
8	Power of Attorney	xxSeasonal.pdf	232506 16ec32df129aa24b273d44921bf7f5786a7ee26b	no	2
Warnings:					
Information:					
9	Fee Worksheet (SB06)	fee-info.pdf	35409 8fc3b163d156ee57a817927a4771bd7d310e1829	no	2
Warnings:					
Information:					
		Total Files Size (in bytes):	4552924		

This Acknowledgement Receipt evidences receipt on the noted date by the USPTO of the indicated documents, characterized by the applicant, and including page counts, where applicable. It serves as evidence of receipt similar to a Post Card, as described in MPEP 503.

New Applications Under 35 U.S.C. 111
If a new application is being filed and the application includes the necessary components for a filing date (see 37 CFR 1.53(b)-(d) and MPEP 506), a Filing Receipt (37 CFR 1.54) will be issued in due course and the date shown on this Acknowledgement Receipt will establish the filing date of the application.
National Stage of an International Application under 35 U.S.C. 371
If a timely submission to enter the national stage of an international application is compliant with the conditions of 35 U.S.C. 371 and other applicable requirements a Form PCT/DO/EO/903 indicating acceptance of the application as a national stage submission under 35 U.S.C. 371 will be issued in addition to the Filing Receipt, in due course.
New International Application Filed with the USPTO as a Receiving Office
If a new international application is being filed and the international application includes the necessary components for an international filing date (see PCT Article 11 and MPEP 1810), a Notification of the International Application Number and of the International Filing Date (Form PCT/RO/105) will be issued in due course, subject to prescriptions concerning national security, and the date shown on this Acknowledgement Receipt will establish the international filing date of the application.

Electronic Patent Application Fee Transmittal

Application Number:	
Filing Date:	
Title of Invention:	RESISTIVE BYPASS FOR SERIES LIGHTING CIRCUIT
First Named Inventor/Applicant Name:	Steven J. Altamura
Filer:	Michael B. Lasky/Jennifer Armstrong
Attorney Docket Number:	40617.0493USC4

Filed as Small Entity

Filing Fees for Utility under 35 USC 111(a)

Description	Fee Code	Quantity	Amount	Sub-Total in USD($)
Basic Filing:				
UTILITY FILING FEE (ELECTRONIC FILING)	4011	1	75	75
UTILITY SEARCH FEE	2111	1	330	330
UTILITY EXAMINATION FEE	2311	1	380	380
Pages:				
Claims:				
Miscellaneous-Filing:				
Petition:				
Patent-Appeals-and-Interference:				

Description	Fee Code	Quantity	Amount	Sub-Total in USD($)
Post-Allowance-and-Post-Issuance:				
Extension-of-Time:				
Miscellaneous:				
			Total in USD ($)	**785**

PTO/SB/06 (09-11)
Approved for use through 1/31/2014. OMB 0651-0032
U.S. Patent and Trademark Office; U.S. DEPARTMENT OF COMMERCE
Under the Paperwork Reduction Act of 1995, no persons are required to respond to a collection of information unless it displays a valid OMB control number.

PATENT APPLICATION FEE DETERMINATION RECORD Substitute for Form PTO-875	Application or Docket Number 16/693,552	Filing Date 11/25/2019	☐ To be Mailed

ENTITY: ☐ LARGE ☑ SMALL ☐ MICRO

APPLICATION AS FILED - PART I

FOR	(Column 1) NUMBER FILED	(Column 2) NUMBER EXTRA		RATE ($)	FEE ($)
☐ BASIC FEE (37 CFR 1.16(a), (b), or (c))	N/A	N/A		N/A	
☐ SEARCH FEE (37 CFR 1.16(k), (i), or (m))	N/A	N/A		N/A	
☐ EXAMINATION FEE (37 CFR 1.16(o), (p), or (q))	N/A	N/A		N/A	
TOTAL CLAIMS (37 CFR 1.16(i))	minus 20 =	*		x $50 =	
INDEPENDENT CLAIMS (37 CFR 1.16(h))	minus 3 =	*		x $230 =	
☐ APPLICATION SIZE FEE (37 CFR 1.16(s))	If the specification and drawings exceed 100 sheets of paper, the application size fee due is $310 ($155 for small entity) for each additional 50 sheets or fraction thereof. See 35 U.S.C. 41(a)(1)(G) and 37 CFR 1.16(s).				
☐ MULTIPLE DEPENDENT CLAIM PRESENT (37 CFR 1.16(j))					
* If the difference in column 1 is less than zero, enter "0" in column 2.				TOTAL	

APPLICATION AS AMENDED - PART II

AMENDMENT	11/25/2019	(Column 1) CLAIMS REMAINING AFTER AMENDMENT		(Column 2) HIGHEST NUMBER PREVIOUSLY PAID FOR	(Column 3) PRESENT EXTRA		RATE ($)	ADDITIONAL FEE ($)
	Total (37 CFR 1.16(i))	* 20	Minus	** 20	= 0		x $50 =	0
	Independent (37 CFR 1.16(h))	* 3	Minus	*** 3	= 0		x $230 =	0
	☐ Application Size Fee (37 CFR 1.16(s))							
	☐ FIRST PRESENTATION OF MULTIPLE DEPENDENT CLAIM (37 CFR 1.16(j))							
							TOTAL ADD'L FEE	0

AMENDMENT		(Column 1) CLAIMS REMAINING AFTER AMENDMENT		(Column 2) HIGHEST NUMBER PREVIOUSLY PAID FOR	(Column 3) PRESENT EXTRA		RATE ($)	ADDITIONAL FEE ($)
	Total (37 CFR 1.16(i))	*	Minus	**	=		x $0 =	
	Independent (37 CFR 1.16(h))	*	Minus	***	=		x $0 =	
	☐ Application Size Fee (37 CFR 1.16(s))							
	☐ FIRST PRESENTATION OF MULTIPLE DEPENDENT CLAIM (37 CFR 1.16(j))							
							TOTAL ADD'L FEE	

* If the entry in column 1 is less than the entry in column 2, write "0" in column 3.	LDRC
** If the "Highest Number Previously Paid For" IN THIS SPACE is less than 20, enter "20".	/EVA V GILLIS/
*** If the "Highest Number Previously Paid For" IN THIS SPACE is less than 3, enter "3".	
The "Highest Number Previously Paid For" (Total or Independent) is the highest number found in the appropriate box in column 1.	

This collection of information is required by 37 CFR 1.16. The information is required to obtain or retain a benefit by the public which is to file (and by the USPTO to process) an application. Confidentiality is governed by 35 U.S.C. 122 and 37 CFR 1.14. This collection is estimated to take 12 minutes to complete, including gathering, preparing, and submitting the completed application form to the USPTO. Time will vary depending upon the individual case. Any comments on the amount of time you require to complete this form and/or suggestions for reducing this burden, should be sent to the Chief Information Officer, U.S. Patent and Trademark Office, U.S. Department of Commerce, P.O. Box 1450, Alexandria, VA 22313-1450. DO NOT SEND FEES OR COMPLETED FORMS TO THIS ADDRESS. **SEND TO: Commissioner for Patents, P.O. Box 1450, Alexandria, VA 22313-1450.**

If you need assistance in completing the form, call 1-800-PTO-9199 and select option 2.

UNITED STATES PATENT AND TRADEMARK OFFICE

UNITED STATES DEPARTMENT OF COMMERCE
United States Patent and Trademark Office
Address: COMMISSIONER FOR PATENTS
P.O. Box 1450
Alexandria, Virginia 22313-1450
www.uspto.gov

APPLICATION NUMBER	FILING or 371(c) DATE	GRP ART UNIT	FIL FEE REC'D	ATTY.DOCKET.NO	TOT CLAIMS	IND CLAIMS
16/693,552	11/25/2019	2844	785	40617.0493USC4	20	3

CONFIRMATION NO. 8833

FILING RECEIPT

OC000000113381181

52835
HAMRE, SCHUMANN, MUELLER & LARSON, P.C.
45 South Seventh Street
Suite 2700
Minneapolis, MN 55402-1683

Date Mailed: 12/18/2019

Receipt is acknowledged of this non-provisional utility patent application. The application will be taken up for examination in due course. Applicant will be notified as to the results of the examination. Any correspondence concerning the application must include the following identification information: the U.S. APPLICATION NUMBER, FILING DATE, NAME OF FIRST INVENTOR, and TITLE OF INVENTION. Fees transmitted by check or draft are subject to collection.

Please verify the accuracy of the data presented on this receipt. If an error is noted on this Filing Receipt, please submit a written request for a corrected Filing Receipt, including a properly marked-up ADS showing the changes with strike-through for deletions and underlining for additions. If you received a "Notice to File Missing Parts" or other Notice requiring a response for this application, please submit any request for correction to this Filing Receipt with your reply to the Notice. When the USPTO processes the reply to the Notice, the USPTO will generate another Filing Receipt incorporating the requested corrections provided that the request is grantable.

Inventor(s)

Steven J. Altamura, Scarsdale, NY;

Applicant(s)

Seasonal Specialties, LLC, Eden Prairie, MN;

Power of Attorney: The patent practitioners associated with Customer Number 52835

Domestic Priority data as claimed by applicant

This application is a CON of 15/899,264 02/19/2018 PAT 10492282
which is a CON of 14/840,705 08/31/2015 PAT 9900968
which is a CON of 14/052,124 10/11/2013 ABN
which is a CON of 12/947,488 11/16/2010 ABN
which is a DIV of 11/962,964 12/21/2007 PAT 7851981
which claims benefit of 60/876,868 12/22/2006

Foreign Applications for which priority is claimed (You may be eligible to benefit from the **Patent Prosecution Highway** program at the USPTO. Please see http://www.uspto.gov for more information.) - None.
Foreign application information must be provided in an Application Data Sheet in order to constitute a claim to foreign priority. See 37 CFR 1.55 and 1.76.

Permission to Access Application via Priority Document Exchange: Yes

Permission to Access Search Results: Yes

Applicant may provide or rescind an authorization for access using Form PTO/SB/39 or Form PTO/SB/69 as appropriate.

If Required, Foreign Filing License Granted: 12/16/2019

The country code and number of your priority application, to be used for filing abroad under the Paris Convention, is **US 16/693,552**

Projected Publication Date: 03/26/2020

Non-Publication Request: No

Early Publication Request: No
**** SMALL ENTITY ****
Title

RESISTIVE BYPASS FOR SERIES LIGHTING CIRCUIT

Preliminary Class

315

Statement under 37 CFR 1.55 or 1.78 for AIA (First Inventor to File) Transition Applications: No

PROTECTING YOUR INVENTION OUTSIDE THE UNITED STATES

Since the rights granted by a U.S. patent extend only throughout the territory of the United States and have no effect in a foreign country, an inventor who wishes patent protection in another country must apply for a patent in a specific country or in regional patent offices. Applicants may wish to consider the filing of an international application under the Patent Cooperation Treaty (PCT). An international (PCT) application generally has the same effect as a regular national patent application in each PCT-member country. The PCT process **simplifies** the filing of patent applications on the same invention in member countries, but **does not result** in a grant of "an international patent" and does not eliminate the need of applicants to file additional documents and fees in countries where patent protection is desired.

Almost every country has its own patent law, and a person desiring a patent in a particular country must make an application for patent in that country in accordance with its particular laws. Since the laws of many countries differ in various respects from the patent law of the United States, applicants are advised to seek guidance from specific foreign countries to ensure that patent rights are not lost prematurely.

Applicants also are advised that in the case of inventions made in the United States, the Director of the USPTO must issue a license before applicants can apply for a patent in a foreign country. The filing of a U.S. patent application serves as a request for a foreign filing license. The application's filing receipt contains further information and guidance as to the status of applicant's license for foreign filing.

Applicants may wish to consult the USPTO booklet, "General Information Concerning Patents" (specifically, the section entitled "Treaties and Foreign Patents") for more information on timeframes and deadlines for filing foreign patent applications. The guide is available either by contacting the USPTO Contact Center at 800-786-9199, or it can be viewed on the USPTO website at http://www.uspto.gov/web/offices/pac/doc/general/index.html.

For information on preventing theft of your intellectual property (patents, trademarks and copyrights), you may wish to consult the U.S. Government website, http://www.stopfakes.gov. Part of a Department of Commerce initiative, this website includes self-help "toolkits" giving innovators guidance on how to protect intellectual property in specific

countries such as China, Korea and Mexico. For questions regarding patent enforcement issues, applicants may call the U.S. Government hotline at 1-866-999-HALT (1-866-999-4258).

LICENSE FOR FOREIGN FILING UNDER

Title 35, United States Code, Section 184

Title 37, Code of Federal Regulations, 5.11 & 5.15

GRANTED

The applicant has been granted a license under 35 U.S.C. 184, if the phrase "IF REQUIRED, FOREIGN FILING LICENSE GRANTED" followed by a date appears on this form. Such licenses are issued in all applications where the conditions for issuance of a license have been met, regardless of whether or not a license may be required as set forth in 37 CFR 5.15. The scope and limitations of this license are set forth in 37 CFR 5.15(a) unless an earlier license has been issued under 37 CFR 5.15(b). The license is subject to revocation upon written notification. The date indicated is the effective date of the license, unless an earlier license of similar scope has been granted under 37 CFR 5.13 or 5.14.

This license is to be retained by the licensee and may be used at any time on or after the effective date thereof unless it is revoked. This license is automatically transferred to any related applications(s) filed under 37 CFR 1.53(d). This license is not retroactive.

The grant of a license does not in any way lessen the responsibility of a licensee for the security of the subject matter as imposed by any Government contract or the provisions of existing laws relating to espionage and the national security or the export of technical data. Licensees should apprise themselves of current regulations especially with respect to certain countries, of other agencies, particularly the Office of Defense Trade Controls, Department of State (with respect to Arms, Munitions and Implements of War (22 CFR 121-128)); the Bureau of Industry and Security, Department of Commerce (15 CFR parts 730-774); the Office of Foreign AssetsControl, Department of Treasury (31 CFR Parts 500+) and the Department of Energy.

NOT GRANTED

No license under 35 U.S.C. 184 has been granted at this time, if the phrase "IF REQUIRED, FOREIGN FILING LICENSE GRANTED" DOES NOT appear on this form. Applicant may still petition for a license under 37 CFR 5.12, if a license is desired before the expiration of 6 months from the filing date of the application. If 6 months has lapsed from the filing date of this application and the licensee has not received any indication of a secrecy order under 35 U.S.C. 181, the licensee may foreign file the application pursuant to 37 CFR 5.15(b).

SelectUSA

The United States represents the largest, most dynamic marketplace in the world and is an unparalleled location for business investment, innovation, and commercialization of new technologies. The U.S. offers tremendous resources and advantages for those who invest and manufacture goods here. Through SelectUSA, our nation works to promote and facilitate business investment. SelectUSA provides information assistance to the international investor community; serves as an ombudsman for existing and potential investors; advocates on behalf of U.S. cities, states, and regions competing for global investment; and counsels U.S. economic development organizations on investment attraction best practices. To learn more about why the United States is the best country in the world to develop

technology, manufacture products, deliver services, and grow your business, visit http://www.SelectUSA.gov or call +1-202-482-6800.

PATENT APPLICATION FEE DETERMINATION RECORD

Substitute for Form PTO-875

Application or Docket Number
16/693,552

APPLICATION AS FILED - PART I

FOR	(Column 1) NUMBER FILED	(Column 2) NUMBER EXTRA	SMALL ENTITY RATE($)	SMALL ENTITY FEE($)	OR	OTHER THAN SMALL ENTITY RATE($)	OTHER THAN SMALL ENTITY FEE($)
BASIC FEE (37 CFR 1.16(a), (b), or (c))	N/A	N/A	N/A	75		N/A	
SEARCH FEE (37 CFR 1.16(k), (i), or (m))	N/A	N/A	N/A	330		N/A	
EXAMINATION FEE (37 CFR 1.16(o), (p), or (q))	N/A	N/A	N/A	380		N/A	
TOTAL CLAIMS (37 CFR 1.16(i))	20 minus 20 =	*	x 50 =	0.00	OR		
INDEPENDENT CLAIMS (37 CFR 1.16(h))	3 minus 3 =	*	x 230 =	0.00			
APPLICATION SIZE FEE (37 CFR 1.16(s))	If the specification and drawings exceed 100 sheets of paper, the application size fee due is $310 ($155 for small entity) for each additional 50 sheets or fraction thereof. See 35 U.S.C. 41(a)(1)(G) and 37 CFR 1.16(s).			0.00			
MULTIPLE DEPENDENT CLAIM PRESENT (37 CFR 1.16(j))				0.00			
* If the difference in column 1 is less than zero, enter "0" in column 2.			TOTAL	785		TOTAL	

APPLICATION AS AMENDED - PART II

		(Column 1) CLAIMS REMAINING AFTER AMENDMENT		(Column 2) HIGHEST NUMBER PREVIOUSLY PAID FOR	(Column 3) PRESENT EXTRA	SMALL ENTITY RATE($)	SMALL ENTITY ADDITIONAL FEE($)	OR	OTHER THAN SMALL ENTITY RATE($)	OTHER THAN SMALL ENTITY ADDITIONAL FEE($)
AMENDMENT A	Total (37 CFR 1.16(i))	*	Minus	**	=	x =		OR	x =	
AMENDMENT A	Independent (37 CFR 1.16(h))	*	Minus	***	=	x =		OR	x =	
AMENDMENT A	Application Size Fee (37 CFR 1.16(s))									
AMENDMENT A	FIRST PRESENTATION OF MULTIPLE DEPENDENT CLAIM (37 CFR 1.16(j))							OR		
						TOTAL ADD'L FEE		OR	TOTAL ADD'L FEE	

		(Column 1) CLAIMS REMAINING AFTER AMENDMENT		(Column 2) HIGHEST NUMBER PREVIOUSLY PAID FOR	(Column 3) PRESENT EXTRA	RATE($)	ADDITIONAL FEE($)		RATE($)	ADDITIONAL FEE($)
AMENDMENT B	Total (37 CFR 1.16(i))	*	Minus	**	=	x =		OR	x =	
AMENDMENT B	Independent (37 CFR 1.16(h))	*	Minus	***	=	x =		OR	x =	
AMENDMENT B	Application Size Fee (37 CFR 1.16(s))									
AMENDMENT B	FIRST PRESENTATION OF MULTIPLE DEPENDENT CLAIM (37 CFR 1.16(j))							OR		
						TOTAL ADD'L FEE		OR	TOTAL ADD'L FEE	

* If the entry in column 1 is less than the entry in column 2, write "0" in column 3.
** If the "Highest Number Previously Paid For" IN THIS SPACE is less than 20, enter "20".
*** If the "Highest Number Previously Paid For" IN THIS SPACE is less than 3, enter "3".
The "Highest Number Previously Paid For" (Total or Independent) is the highest found in the appropriate box in column 1.

PTO/SB/08a (02-18)
Approved for use through 11/30/2020. OMB 0651-0031
U.S. Patent and Trademark Office; U.S. DEPARTMENT OF COMMERCE
Under the Paperwork Reduction Act of 1995, no persons are required to respond to a collection of information unless it contains a valid OMB control number.

INFORMATION DISCLOSURE STATEMENT BY APPLICANT

(Not for submission under 37 CFR 1.99)

Application Number	16693552
Filing Date	2019-11-25
First Named Inventor	Steven J. Altamura
Art Unit	
Examiner Name	
Attorney Docket Number	40617.0493USC4

U.S.PATENTS Remove

Examiner Initial*	Cite No	Patent Number	Kind Code[1]	Issue Date	Name of Patentee or Applicant of cited Document	Pages,Columns,Lines where Relevant Passages or Relevant Figures Appear
	1	7963670		2011-06-21	Yu	
	2	7666036		2010-02-23	Zou	
	3	9433057		2016-08-30	Janning	
	4	9510423		2016-11-29	Janning	

If you wish to add additional U.S. Patent citation information please click the Add button. Add

U.S.PATENT APPLICATION PUBLICATIONS Remove

Examiner Initial*	Cite No	Publication Number	Kind Code[1]	Publication Date	Name of Patentee or Applicant of cited Document	Pages,Columns,Lines where Relevant Passages or Relevant Figures Appear
	1					

If you wish to add additional U.S. Published Application citation information please click the Add button. Add

FOREIGN PATENT DOCUMENTS Remove

Examiner Initial*	Cite No	Foreign Document Number[3]	Country Code[2] i	Kind Code[4]	Publication Date	Name of Patentee or Applicant of cited Document	Pages,Columns,Lines where Relevant Passages or Relevant Figures Appear	T[5]

INFORMATION DISCLOSURE STATEMENT BY APPLICANT (Not for submission under 37 CFR 1.99)	Application Number	16693552
	Filing Date	2019-11-25
	First Named Inventor	Steven J. Altamura
	Art Unit	
	Examiner Name	
	Attorney Docket Number	40617.0493USC4

	1							

If you wish to add additional Foreign Patent Document citation information please click the Add button Add

NON-PATENT LITERATURE DOCUMENTS Remove

Examiner Initials*	Cite No	Include name of the author (in CAPITAL LETTERS), title of the article (when appropriate), title of the item (book, magazine, journal, serial, symposium, catalog, etc), date, pages(s), volume-issue number(s), publisher, city and/or country where published.	T[5]
	1		

If you wish to add additional non-patent literature document citation information please click the Add button Add

EXAMINER SIGNATURE

Examiner Signature		Date Considered	

*EXAMINER: Initial if reference considered, whether or not citation is in conformance with MPEP 609. Draw line through a citation if not in conformance and not considered. Include copy of this form with next communication to applicant.

[1] See Kind Codes of USPTO Patent Documents at www.USPTO.GOV or MPEP 901.04. [2] Enter office that issued the document, by the two-letter code (WIPO Standard ST.3). [3] For Japanese patent documents, the indication of the year of the reign of the Emperor must precede the serial number of the patent document. [4] Kind of document by the appropriate symbols as indicated on the document under WIPO Standard ST.16 if possible. [5] Applicant is to place a check mark here if English language translation is attached.

INFORMATION DISCLOSURE STATEMENT BY APPLICANT (Not for submission under 37 CFR 1.99)	Application Number	16693552
	Filing Date	2019-11-25
	First Named Inventor	Steven J. Altamura
	Art Unit	
	Examiner Name	
	Attorney Docket Number	40617.0493USC4

CERTIFICATION STATEMENT

Please see 37 CFR 1.97 and 1.98 to make the appropriate selection(s):

That each item of information contained in the information disclosure statement was first cited in any communication from a foreign patent office in a counterpart foreign application not more than three months prior to the filing of the information disclosure statement. See 37 CFR 1.97(e)(1).

OR

☐ That no item of information contained in the information disclosure statement was cited in a communication from a foreign patent office in a counterpart foreign application, and, to the knowledge of the person signing the certification after making reasonable inquiry, no item of information contained in the information disclosure statement was known to any individual designated in 37 CFR 1.56(c) more than three months prior to the filing of the information disclosure statement. See 37 CFR 1.97(e)(2).

See attached certification statement.

The fee set forth in 37 CFR 1.17 (p) has been submitted herewith.

☒ A certification statement is not submitted herewith.

SIGNATURE

A signature of the applicant or representative is required in accordance with CFR 1.33, 10.18. Please see CFR 1.4(d) for the form of the signature.

Signature	/Michael Lasky/	Date (YYYY-MM-DD)	2020-01-28
Name/Print	Michael B. Lasky	Registration Number	29555

This collection of information is required by 37 CFR 1.97 and 1.98. The information is required to obtain or retain a benefit by the public which is to file (and by the USPTO to process) an application. Confidentiality is governed by 35 U.S.C. 122 and 37 CFR 1.14. This collection is estimated to take 1 hour to complete, including gathering, preparing and submitting the completed application form to the USPTO. Time will vary depending upon the individual case. Any comments on the amount of time you require to complete this form and/or suggestions for reducing this burden, should be sent to the Chief Information Officer, U.S. Patent and Trademark Office, U.S. Department of Commerce, P.O. Box 1450, Alexandria, VA 22313-1450. DO NOT SEND FEES OR COMPLETED FORMS TO THIS ADDRESS. **SEND TO: Commissioner for Patents, P.O. Box 1450, Alexandria, VA 22313-1450.**

Privacy Act Statement

The Privacy Act of 1974 (P.L. 93-579) requires that you be given certain information in connection with your submission of the attached form related to a patent application or patent. Accordingly, pursuant to the requirements of the Act, please be advised that: (1) the general authority for the collection of this information is 35 U.S.C. 2(b)(2); (2) furnishing of the information solicited is voluntary; and (3) the principal purpose for which the information is used by the U.S. Patent and Trademark Office is to process and/or examine your submission related to a patent application or patent. If you do not furnish the requested information, the U.S. Patent and Trademark Office may not be able to process and/or examine your submission, which may result in termination of proceedings or abandonment of the application or expiration of the patent.

The information provided by you in this form will be subject to the following routine uses:

1. The information on this form will be treated confidentially to the extent allowed under the Freedom of Information Act (5 U.S.C. 552) and the Privacy Act (5 U.S.C. 552a). Records from this system of records may be disclosed to the Department of Justice to determine whether the Freedom of Information Act requires disclosure of these record s.

2. A record from this system of records may be disclosed, as a routine use, in the course of presenting evidence to a court, magistrate, or administrative tribunal, including disclosures to opposing counsel in the course of settlement negotiations.

3. A record in this system of records may be disclosed, as a routine use, to a Member of Congress submitting a request involving an individual, to whom the record pertains, when the individual has requested assistance from the Member with respect to the subject matter of the record.

4. A record in this system of records may be disclosed, as a routine use, to a contractor of the Agency having need for the information in order to perform a contract. Recipients of information shall be required to comply with the requirements of the Privacy Act of 1974, as amended, pursuant to 5 U.S.C. 552a(m).

5. A record related to an International Application filed under the Patent Cooperation Treaty in this system of records may be disclosed, as a routine use, to the International Bureau of the World Intellectual Property Organization, pursuant to the Patent Cooperation Treaty.

6. A record in this system of records may be disclosed, as a routine use, to another federal agency for purposes of National Security review (35 U.S.C. 181) and for review pursuant to the Atomic Energy Act (42 U.S.C. 218(c)).

7. A record from this system of records may be disclosed, as a routine use, to the Administrator, General Services, or his/her designee, during an inspection of records conducted by GSA as part of that agency's responsibility to recommend improvements in records management practices and programs, under authority of 44 U.S.C. 2904 and 2906. Such disclosure shall be made in accordance with the GSA regulations governing inspection of records for this purpose, and any other relevant (i.e., GSA or Commerce) directive. Such disclosure shall not be used to make determinations about individuals.

8. A record from this system of records may be disclosed, as a routine use, to the public after either publication of the application pursuant to 35 U.S.C. 122(b) or issuance of a patent pursuant to 35 U.S.C. 151. Further, a record may be disclosed, subject to the limitations of 37 CFR 1.14, as a routine use, to the public if the record was filed in an application which became abandoned or in which the proceedings were terminated and which application is referenced by either a published application, an application open to public inspections or an issued patent.

9. A record from this system of records may be disclosed, as a routine use, to a Federal, State, or local law enforcement agency, if the USPTO becomes aware of a violation or potential violation of law or regulation.

Electronic Acknowledgement Receipt

EFS ID:	38421970
Application Number:	16693552
International Application Number:	
Confirmation Number:	8833
Title of Invention:	RESISTIVE BYPASS FOR SERIES LIGHTING CIRCUIT
First Named Inventor/Applicant Name:	Steven J. Altamura
Customer Number:	52835
Filer:	Michael B. Lasky/Jennifer Armstrong
Filer Authorized By:	Michael B. Lasky
Attorney Docket Number:	40617.0493USC4
Receipt Date:	28-JAN-2020
Filing Date:	25-NOV-2019
Time Stamp:	15:41:53
Application Type:	Utility under 35 USC 111(a)

Payment information:

Submitted with Payment	no

File Listing:

Document Number	Document Description	File Name	File Size(Bytes)/ Message Digest	Multi Part /.zip	Pages (if appl.)
1	Information Disclosure Statement (IDS) Form (SB08)	617493IDS.pdf	1034291 d8059ec71b23cde1041db6ca277424adc86ce971	no	4

Warnings:

Information:	
Total Files Size (in bytes):	1034291

This Acknowledgement Receipt evidences receipt on the noted date by the USPTO of the indicated documents, characterized by the applicant, and including page counts, where applicable. It serves as evidence of receipt similar to a Post Card, as described in MPEP 503.

New Applications Under 35 U.S.C. 111
If a new application is being filed and the application includes the necessary components for a filing date (see 37 CFR 1.53(b)-(d) and MPEP 506), a Filing Receipt (37 CFR 1.54) will be issued in due course and the date shown on this Acknowledgement Receipt will establish the filing date of the application.
National Stage of an International Application under 35 U.S.C. 371
If a timely submission to enter the national stage of an international application is compliant with the conditions of 35 U.S.C. 371 and other applicable requirements a Form PCT/DO/EO/903 indicating acceptance of the application as a national stage submission under 35 U.S.C. 371 will be issued in addition to the Filing Receipt, in due course.
New International Application Filed with the USPTO as a Receiving Office
If a new international application is being filed and the international application includes the necessary components for an international filing date (see PCT Article 11 and MPEP 1810), a Notification of the International Application Number and of the International Filing Date (Form PCT/RO/105) will be issued in due course, subject to prescriptions concerning national security, and the date shown on this Acknowledgement Receipt will establish the international filing date of the application.

UNITED STATES PATENT AND TRADEMARK OFFICE

UNITED STATES DEPARTMENT OF COMMERCE
United States Patent and Trademark Office
Address: COMMISSIONER FOR PATENTS
P.O. Box 1450
Alexandria, Virginia 22313-1450
www.uspto.gov

APPLICATION NUMBER	FILING OR 371(C) DATE	FIRST NAMED APPLICANT	ATTY. DOCKET NO./TITLE
16/693,552	11/25/2019	Steven J. Altamura	40617.0493USC4

CONFIRMATION NO. 8833

PUBLICATION NOTICE

OC000000115742319

52835
HAMRE, SCHUMANN, MUELLER & LARSON, P.C.
45 South Seventh Street
Suite 2700
Minneapolis, MN 55402-1683

Title:RESISTIVE BYPASS FOR SERIES LIGHTING CIRCUIT

Publication No.US-2020-0100347-A1
Publication Date:03/26/2020

NOTICE OF PUBLICATION OF APPLICATION

The above-identified application will be electronically published as a patent application publication pursuant to 37 CFR 1.211, et seq. The patent application publication number and publication date are set forth above.

The publication may be accessed through the USPTO's publically available Searchable Databases via the Internet at www.uspto.gov. The direct link to access the publication is currently http://www.uspto.gov/patft/.

The publication process established by the Office does not provide for mailing a copy of the publication to applicant. A copy of the publication may be obtained from the Office upon payment of the appropriate fee set forth in 37 CFR 1.19(a)(1). Orders for copies of patent application publications are handled by the USPTO's Public Records Division. The Public Records Division can be reached by telephone at (571) 272-3150 or (800) 972-6382, by facsimile at (571) 273-3250, by mail addressed to the United States Patent and Trademark Office, Public Records Division, Alexandria, VA 22313-1450 or via the Internet.

In addition, information on the status of the application, including the mailing date of Office actions and the dates of receipt of correspondence filed in the Office, may also be accessed via the Internet through the Patent Electronic Business Center at www.uspto.gov using the public side of the Patent Application Information and Retrieval (PAIR) system. The direct link to access this status information is currently https://portal.uspto.gov/pair/PublicPair. Prior to publication, such status information is confidential and may only be obtained by applicant using the private side of PAIR.

Further assistance in electronically accessing the publication, or about PAIR, is available by calling the Patent Electronic Business Center at 1-866-217-9197.

Office of Data Managment, Application Assistance Unit (571) 272-4000, or (571) 272-4200, or 1-888-786-0101

IN THE UNITED STATES PATENT AND TRADEMARK OFFICE

Applicant:	Steven J. Altamura	Examiner:	HINES
Serial No.:	16/693552	Group Art Unit:	2879
Filed:	November 25, 2019	Docket No.:	40617.0493USC4
Title:	RESISTIVE BYPASS FOR SERIES LIGHTING CIRCUIT		

SECOND PRELIMINARY AMENDMENT

Mail Stop Patent Application
Commissioner for Patents
P.O. Box 1450
Alexandria, VA 22313-1450

Dear Sir:

Please enter the following preliminary amendment into the above-referenced application.

Amendments to the Claims begin on page 2 of this paper.

Remarks begin on page 6 of this paper.

AMENDMENTS TO THE CLAIMS

This listing of claims will replace all prior versions, and listings, of claims in the application.

1. (Currently Amended) A resistor bypass circuit for a series lighting circuit comprising a plurality of serially connected LED light sources and a bypass resistor being connected in parallel with at least one of the respective light sources, ~~each respective light source low wattage and~~ being capable operating on a one hundred percent duty cycle as desired.

2. (Original) The resistor bypass circuit of claim 1, where the circuit is series-parallel connected.

3. (Currently Amended) The resistor bypass circuit of claim 1~~, the light source being an incandescent bulb.~~ wherein at least one of the light sources is a semiconductor providing a twinkling effect, and wherein the semiconductor light source utilizes electronic circuits that control the flashing rate of the light source.

4. (Currently Amended) The resistor bypass circuit of claim 1, ~~the light source being a semiconductor~~ further including an LED flashing light source which includes a flashing circuit which causes the entire light circuit to flash.

5. (Currently Amended) The resistor bypass circuit of claim 1, ~~the light source being an LED.~~ wherein the LED light source uses 0.20 watts or less.

6. (Currently Amended) The resistor bypass circuit of claim 4, at least one of the light sources is a ~~the light source the~~ semiconductor light source providing a twinkling effect.

7. (Currently Amended) The resistor bypass circuit of claim ~~6~~ 1, at least one of the light sources is a ~~the~~ semiconductor light source utilizing electronic circuits that control

the flashing rate of the light source, which would only affect the individual lighting element as the resistive bypass would allow current to continue to flow in remaining lighting elements in the series circuit.

8. (Currently Amended) The resistor bypass circuit of claim 1 wherein the resistance of the bypass resistor is greater than the inherent resistance of the light source to which the resistor is attached, thereby minimizing the burn out potential of other light sources in the light string. ~~6, the electronic circuits being LED packages that incorporate integrated circuits (ICs)~~

9. (Original) The resistor bypass circuit of claim 5, the light source being a semiconductor light source for providing color changing characteristics.

10. (Original) The resistor bypass circuit of claim 9, the semiconductor light source utilizing LED packages that incorporate two or more LED chips, and an integrated circuit (IC), the integrated circuit controlling each LED chip in respective LED packages independently.

11. (Original) The resistor bypass circuit of claim 10, the IC controlling the current and/or voltage to the individual LED chips in the LED package, the control providing for the mixing of the LED chip colors to get various resultant colors.

12. (Original) The resistor bypass circuit of claim 11, the control only affecting individual lighting element, the bypass resistor providing for current continuing to flow in remaining lighting elements in the series circuit.

13. (Currently Amended) The resistor bypass circuit of claim 1, wherein said light source is a blinking LED with a first state allowing current to flow through the device and a second state where the light source is an open circuit, whereby remaining light sources in the light string operate with current passing through the bypass resistor when the light source is in the second state. ~~a respective resistive bypass resistor being~~

~~connected in parallel with more than one light source, the failure of one of the light sources thereby only affecting a limited number of the plurality of light sources.~~

14. (Original) The resistor bypass circuit of claim 1 being utilized in AC or DC circuits powered form a power source selected from the list consisting of batteries, step down transformers, AC utility power, or converters from AC to DC or DC to AC power, pulsed DC, and filtered or unfiltered DC, or partially filtered AC.

15. (Original) A resistor bypass circuit for a series lighting circuit comprising a plurality of serially connected incandescent light sources and a bypass resistor being connected in parallel with at least one of the respective light sources, each respective light source being low wattage when conducting and being capable operating on a one hundred percent duty cycle as desired.

16. (Original) The resistor bypass circuit of claim 15, where the circuit is series-parallel connected.

17. (Original) A method of forming a resistor bypass circuit for a series lighting circuit comprising serially connecting a plurality of light sources, connecting a bypass resistor in parallel with at least one of the respective light sources, and to be capable of operating on a one hundred percent duty cycle as desired.

18. (Original) The method of claim 17, including forming the light source of an incandescent bulb.

19. (Original) The method of claim 17, including forming the light source of a semiconductor.

20. (Original) The method of claim 19, including forming the light source of an LED.

21. (Original) An incandescent light bulb having an illuminating element disposed in a region of a bulb canopy that is displaced distant from a bulb base.

22. (Original) The bulb of claim 21, a filament being formed of a relatively pure form of tungsten of relatively thin construction.

23. (Original) The bulb of claim 21, with a relatively greater number of windings of the filament.

24. (Original) The bulb of claim 21 with a relative tighter turn radius of the filament.

25. (Original) The bulb of claim 21, with a filament being formed of a relatively pure form of tungsten of relatively thin construction with a relatively tighter turn radius of the filament.

REMARKS

The above preliminary amendment is made to amend claims 1, 3-8, and 13 for this Continuation application filing.

Also submitted is a declaration under 37 CFR 1.131 with respect to the date of invention.

Applicant respectfully requests that this preliminary amendment be entered into the record prior to calculation of the filing fee and prior to examination and consideration of the above-identified application.

If a telephone conference would be helpful in resolving any issues concerning this communication, please contact Applicant's attorney of record, Michael B. Lasky at (952) 253-4106.

Respectfully submitted,

Hamre, Schumann, Mueller & Larson, P.C.

Customer No. 52835

Date: September 3, 2020

By: __/Michael Lasky/_____
Michael B. Lasky
Reg. No. 29,555
MBL/yik

IN THE UNITED STATES PATENT AND TRADEMARK OFFICE

Applicant:	Altamura	Examiner:	Unknown
Serial No.:	16/693,552	Group Art Unit:	Unknown
Filed:	25 November 2019	Docket No.:	40617.0493USC4
Title:	Resistive bypass for series lighting circuit		

Declaration of Steven Altamura
Under
37 C.F.R. §1.131

Mail Stop Amendment
Commissioner for Patents
P.O. Box 1450
Alexandria, VA 22313-1450

Sir:

1. I am Steven Altamura, an employee of Seasonal Specialties, Inc., the assignee of the above identified patent application and the inventor of the subject matter of the above application.

2. I began work on this invention in 2005 and began documenting my work on paper on January 2006.

3. My employer was interested in finding a solution to the problem of series light strings, typically used for holiday or ornamental lighting, failing if a single bulb burning out.

4. At the time, in 2005 and early 2006 most light strings were still using incandescent bulbs since they were much less expensive than LED elements, but I was working on a by-pass circuit for both LED and incandescent elements. Both LED and incandescent elements have the same failure problem which can benefit similarly with a solution, such as described in the above patent application.

5. My first written documentation of this concept is dated January 12, 2006 and written in my own hand. I scanned this document into my computer shortly thereafter. See Exhibit A.

6. I documented in writing further refinements of this bypass concept on Jan 31, 2006 and Feb 27, 2006, showing an illumination element having a bypass resistor in the base of a mini-lamp socket. The socket is used to hold either incandescent or LED elements. See Exhibits B, C and D.

7. I built a prototype of the subject matter of Exhibits A, B, C and D in the early spring of 2006, in order to have it reviewed by a potential customer. Such review would normally occur in March/April of every year.

8. The invention as disclosed in USSN 60/876,868 was submitted to our patent attorneys for drafting into a patent application as early as June 2006.

9. A provisional application according to this invention was filed on 11 Dec 2006 as USSN 60/876,868.

I hereby declare that all statements made herein of my own knowledge are true and that all statements made on information and belief are believed to be true; and further that these statements are made with the knowledge that willful false statements and the like so made are punishable by fine or imprisonment, or both, under 18 U.S.C.§1001 and that such willful false statements may jeopardize the validity of the application or any patent issued thereon.

Steven Altamura

26 August 2020

Electronic Acknowledgement Receipt

EFS ID:	40469994
Application Number:	16693552
International Application Number:	
Confirmation Number:	8833
Title of Invention:	RESISTIVE BYPASS FOR SERIES LIGHTING CIRCUIT
First Named Inventor/Applicant Name:	Steven J. Altamura
Customer Number:	52835
Filer:	Michael B. Lasky/Yelena Kase
Filer Authorized By:	Michael B. Lasky
Attorney Docket Number:	40617.0493USC4
Receipt Date:	03-SEP-2020
Filing Date:	25-NOV-2019
Time Stamp:	17:33:32
Application Type:	Utility under 35 USC 111(a)

Payment information:

Submitted with Payment	no

File Listing:

Document Number	Document Description	File Name	File Size(Bytes)/ Message Digest	Multi Part /.zip	Pages (if appl.)
1		PrelimAmend_0493USC4.pdf	98395 40b7bbfc07c5a835e61b20da2c14dbf919bbb7a6	yes	6

	Multipart Description/PDF files in .zip description		
	Document Description	**Start**	**End**
	Applicant Arguments/Remarks Made in an Amendment	6	6
	Claims	2	5
	Preliminary Amendment	1	1

Warnings:

Information:

2	Miscellaneous Incoming Letter	Declaration_Altamura.pdf	509535 910fd7997f48390e14d1e0aa7f1ce878040a8af8	no	2

Warnings:

Information:

Total Files Size (in bytes):	607930

This Acknowledgement Receipt evidences receipt on the noted date by the USPTO of the indicated documents, characterized by the applicant, and including page counts, where applicable. It serves as evidence of receipt similar to a Post Card, as described in MPEP 503.

New Applications Under 35 U.S.C. 111
If a new application is being filed and the application includes the necessary components for a filing date (see 37 CFR 1.53(b)-(d) and MPEP 506), a Filing Receipt (37 CFR 1.54) will be issued in due course and the date shown on this Acknowledgement Receipt will establish the filing date of the application.
National Stage of an International Application under 35 U.S.C. 371
If a timely submission to enter the national stage of an international application is compliant with the conditions of 35 U.S.C. 371 and other applicable requirements a Form PCT/DO/EO/903 indicating acceptance of the application as a national stage submission under 35 U.S.C. 371 will be issued in addition to the Filing Receipt, in due course.
New International Application Filed with the USPTO as a Receiving Office
If a new international application is being filed and the international application includes the necessary components for an international filing date (see PCT Article 11 and MPEP 1810), a Notification of the International Application Number and of the International Filing Date (Form PCT/RO/105) will be issued in due course, subject to prescriptions concerning national security, and the date shown on this Acknowledgement Receipt will establish the international filing date of the application.

PTO/SB/06 (09-11)
Approved for use through 1/31/2014. OMB 0651-0032
U.S. Patent and Trademark Office; U.S. DEPARTMENT OF COMMERCE
Under the Paperwork Reduction Act of 1995, no persons are required to respond to a collection of information unless it displays a valid OMB control number.

PATENT APPLICATION FEE DETERMINATION RECORD Substitute for Form PTO-875	Application or Docket Number 16/693,552	Filing Date 11/25/2019	☐ To be Mailed

ENTITY: ☐ LARGE ☑ SMALL ☐ MICRO

APPLICATION AS FILED - PART I

FOR	(Column 1) NUMBER FILED	(Column 2) NUMBER EXTRA		RATE ($)	FEE ($)
☐ BASIC FEE (37 CFR 1.16(a), (b), or (c))	N/A	N/A		N/A	
☐ SEARCH FEE (37 CFR 1.16(k), (i), or (m))	N/A	N/A		N/A	
☐ EXAMINATION FEE (37 CFR 1.16(o), (p), or (q))	N/A	N/A		N/A	
TOTAL CLAIMS (37 CFR 1.16(i))	minus 20 =	*		x $50 =	
INDEPENDENT CLAIMS (37 CFR 1.16(h))	minus 3 =	*		x $230 =	
☐ APPLICATION SIZE FEE (37 CFR 1.16(s))	If the specification and drawings exceed 100 sheets of paper, the application size fee due is $310 ($155 for small entity) for each additional 50 sheets or fraction thereof. See 35 U.S.C. 41(a)(1)(G) and 37 CFR 1.16(s).				
☐ MULTIPLE DEPENDENT CLAIM PRESENT (37 CFR 1.16(j))					
* If the difference in column 1 is less than zero, enter "0" in column 2.				TOTAL	

APPLICATION AS AMENDED - PART II

AMENDMENT		(Column 1) CLAIMS REMAINING AFTER AMENDMENT		(Column 2) HIGHEST NUMBER PREVIOUSLY PAID FOR	(Column 3) PRESENT EXTRA		RATE ($)	ADDITIONAL FEE ($)
	Total (37 CFR 1.16(i))	*	Minus	**	=		x $0 =	
	Independent (37 CFR 1.16(h))	*	Minus	***	=		x $0 =	
	☐ Application Size Fee (37 CFR 1.16(s))							
	☐ FIRST PRESENTATION OF MULTIPLE DEPENDENT CLAIM (37 CFR 1.16(j))							
							TOTAL ADD'L FEE	

AMENDMENT	09/03/2020	(Column 1) CLAIMS REMAINING AFTER AMENDMENT		(Column 2) HIGHEST NUMBER PREVIOUSLY PAID FOR	(Column 3) PRESENT EXTRA		RATE ($)	ADDITIONAL FEE ($)
	Total (37 CFR 1.16(i))	* 20	Minus	** 20	= 0		x $50 =	0
	Independent (37 CFR 1.16(h))	* 3	Minus	*** 3	= 0		x $230 =	0
	☐ Application Size Fee (37 CFR 1.16(s))							
	☐ FIRST PRESENTATION OF MULTIPLE DEPENDENT CLAIM (37 CFR 1.16(j))							
							TOTAL ADD'L FEE	0

* If the entry in column 1 is less than the entry in column 2, write "0" in column 3.	LDRC
** If the "Highest Number Previously Paid For" IN THIS SPACE is less than 20, enter "20".	/EVA V GILLIS/
*** If the "Highest Number Previously Paid For" IN THIS SPACE is less than 3, enter "3".	
The "Highest Number Previously Paid For" (Total or Independent) is the highest number found in the appropriate box in column 1.	

This collection of information is required by 37 CFR 1.16. The information is required to obtain or retain a benefit by the public which is to file (and by the USPTO to process) an application. Confidentiality is governed by 35 U.S.C. 122 and 37 CFR 1.14. This collection is estimated to take 12 minutes to complete, including gathering, preparing, and submitting the completed application form to the USPTO. Time will vary depending upon the individual case. Any comments on the amount of time you require to complete this form and/or suggestions for reducing this burden, should be sent to the Chief Information Officer, U.S. Patent and Trademark Office, U.S. Department of Commerce, P.O. Box 1450, Alexandria, VA 22313-1450. DO NOT SEND FEES OR COMPLETED FORMS TO THIS ADDRESS. **SEND TO: Commissioner for Patents, P.O. Box 1450, Alexandria, VA 22313-1450.**

If you need assistance in completing the form, call 1-800-PTO-9199 and select option 2.

UNITED STATES PATENT AND TRADEMARK OFFICE

UNITED STATES DEPARTMENT OF COMMERCE
United States Patent and Trademark Office
Address: COMMISSIONER FOR PATENTS
P.O. Box 1450
Alexandria, Virginia 22313-1450
www.uspto.gov

APPLICATION NO.	FILING DATE	FIRST NAMED INVENTOR	ATTORNEY DOCKET NO.	CONFIRMATION NO.
16/693,552	11/25/2019	Steven J. Altamura	40617.0493USC4	8833

52835 7590 09/21/2020
HAMRE, SCHUMANN, MUELLER & LARSON, P.C.
45 South Seventh Street
Suite 2700
Minneapolis, MN 55402-1683

EXAMINER
HINES, ANNE M

ART UNIT	PAPER NUMBER
2879	

NOTIFICATION DATE	DELIVERY MODE
09/21/2020	ELECTRONIC

Please find below and/or attached an Office communication concerning this application or proceeding.

The time period for reply, if any, is set in the attached communication.

Notice of the Office communication was sent electronically on above-indicated "Notification Date" to the following e-mail address(es):

PTOMail@hsml.com

Notice of Non-Compliant Amendment (37 CFR 1.121)	Application No. 16/693,552	Applicant(s) Altamura, Steven J.
	Art Unit OPT	AIA (FITF) Status No

-- The MAILING DATE of this communication appears on the cover sheet with the correspondence address --

The amendment document filed on 09/03/2020 is considered non-compliant because it has failed to meet the requirements of 37 CFR 1.121 or 1.4. In order for the amendment document to be compliant, correction of the following item(s) is required.

THE FOLLOWING MARKED (X) ITEM(S) CAUSE THE AMENDMENT DOCUMENT TO BE NON-COMPLIANT:

- ☐ 1. Amendments to the specification:
  - ☐ A. Amended paragraph(s) do not include markings.
  - ☐ B. New paragraph(s) should not be underlined.
  - ☐ C. Other _____ .
- ☐ 2. Abstract:
  - ☐ A.Not presented on a separate sheet. 37 CFR 1.72.
  - ☐ B.Other _____ .
- ☐ 3. Amendments to the drawings:
  - ☐ A. The drawings are not properly identified in the top margin as "Replacement Sheet", "New Sheet", or "Annotated Sheet" as required by 37 CFR 1.121(d).
  - ☐ B. The practice of submitting proposed drawing correction has been eliminated. Replacement drawings showing amended figures, without markings, in compliance with 37 CFR 1.84 are required .
  - ☐ C. Other _____ .
- ☑ 4. Amendments to the claims:
  - ☐ A. A complete listing of all of the claims is not present.
  - ☐ B. The listing of claims does not include the text of all pending claims (including withdrawn claims)
  - ☑ C. Each claim has not been provided with the proper status identifier, and as such, the individual status of each claim cannot be identified. Note: the status of every claim must be indicated after its claim number by using one of the following status identifiers: (Original), (Currently amended), (Canceled), (Previously presented), (New), (Not entered), (Withdrawn) and (Withdrawn-currently amended).
  - ☐ D. The claims of this amendment paper have not been presented in ascending numerical order.
  - ☑ E. Other: Claims 21-25 (Original) were canceled in previous amendment 11/25/19 .
- ☐ 5. Other (e.g., the amendment is unsigned or not signed in accordance with 37 CFR 1.4): For further explanation of the amendment format required by 37 CFR 1.121, see MPEP § 714.

TIME PERIODS FOR FILING A REPLY TO THIS NOTICE:

1. Applicant is given **no new time period** if the non-compliant amendment is an after-final amendment or an amendment filed after allowance, or a drawing submission (only) If applicant wishes to resubmit the non-compliant after-final amendment with corrections, the **entire corrected amendment** must be resubmitted.
2. Applicant is given **two months** from the mail date of this notice to supply the correction, if the non-compliant amendment is one of the following: a preliminary amendment, a non-final amendment (including a submission for a request for continued examination (RCE) under 37 CFR 1.114), a supplemental amendment filed within a suspension period under 37 CFR 1.103(a) or (c), and an amendment filed in response to a Quayle action. If any of above boxes 1 to 4 are checked, the correction required is only the corrected section of the non-compliant amendment in compliance with 37 CFR 1.121.

Extensions of time are available under 37 CFR 1.136(a) only if the non-compliant amendment is a non-final amendment or an amendment filed in response to a *Quayle* action.

Failure to timely respond to this notice will result in:

Abandonment of the application if the non-compliant amendment is a non-final amendment or an amendment filed in response to a *Quayle* action; or

Non-entry of the amendment if the non-compliant amendment is a preliminary amendment or supplemental amendment.

Legal Instruments Examiner (LIE), if applicable /EVA V GILLIS/ Telephone No: (571)272-1577

IN THE UNITED STATES PATENT AND TRADEMARK OFFICE

Applicant:	Steven J. Altamura	Examiner:	HINES
Serial No.:	16/693552	Group Art Unit:	2879
Filed:	November 25, 2019	Docket No.:	40617.0493USC4
Title:	RESISTIVE BYPASS FOR SERIES LIGHTING CIRCUIT		

SECOND PRELIMINARY AMENDMENT

Mail Stop Patent Application
Commissioner for Patents
P.O. Box 1450
Alexandria, VA 22313-1450

Dear Sir:

In response to the Notice of Non-Compliant Amendment dated September 21, 2020, Applicant respectfully requests favorable reconsideration of this application in view of the following amendments and remarks.

Amendments to the Claims are reflected in the Listing of Claims that begins on page 2 of this paper and replaces the Listing of Claims in the previous Preliminary Amendment that did not include correct status identifiers for claims 21-25.

Remarks begin on page 5 of this paper.

AMENDMENTS TO THE CLAIMS

This listing of claims will replace all prior versions, and listings, of claims in the application.

1. (Currently Amended) A resistor bypass circuit for a series lighting circuit comprising a plurality of serially connected LED light sources and a bypass resistor being connected in parallel with at least one of the respective light sources, ~~each respective light source low wattage and~~ being capable operating on a one hundred percent duty cycle as desired.

2. (Original) The resistor bypass circuit of claim 1, where the circuit is series-parallel connected.

3. (Currently Amended) The resistor bypass circuit of claim 1~~, the light source being an incandescent bulb.~~ wherein at least one of the light sources is a semiconductor providing a twinkling effect, and wherein the semiconductor light source utilizes electronic circuits that control the flashing rate of the light source.

4. (Currently Amended) The resistor bypass circuit of claim 1, ~~the light source being a semiconductor~~ further including an LED flashing light source which includes a flashing circuit which causes the entire light circuit to flash.

5. (Currently Amended) The resistor bypass circuit of claim 1, ~~the light source being an LED.~~ wherein the LED light source uses 0.20 watts or less.

6. (Currently Amended) The resistor bypass circuit of claim 4, at least one of the light sources is a ~~the light source the~~ semiconductor light source providing a twinkling effect.

7. (Currently Amended) The resistor bypass circuit of claim ~~6~~ 1, at least one of the light sources is a ~~the~~ semiconductor light source utilizing electronic circuits that control

the flashing rate of the light source, which would only affect the individual lighting element as the resistive bypass would allow current to continue to flow in remaining lighting elements in the series circuit.

8. (Currently Amended) The resistor bypass circuit of claim 1 wherein the resistance of the bypass resistor is greater than the inherent resistance of the light source to which the resistor is attached, thereby minimizing the burn out potential of other light sources in the light string. ~~6, the electronic circuits being LED packages that incorporate integrated circuits (ICs)~~

9. (Original) The resistor bypass circuit of claim 5, the light source being a semiconductor light source for providing color changing characteristics.

10. (Original) The resistor bypass circuit of claim 9, the semiconductor light source utilizing LED packages that incorporate two or more LED chips, and an integrated circuit (IC), the integrated circuit controlling each LED chip in respective LED packages independently.

11. (Original) The resistor bypass circuit of claim 10, the IC controlling the current and/or voltage to the individual LED chips in the LED package, the control providing for the mixing of the LED chip colors to get various resultant colors.

12. (Original) The resistor bypass circuit of claim 11, the control only affecting individual lighting element, the bypass resistor providing for current continuing to flow in remaining lighting elements in the series circuit.

13. (Currently Amended) The resistor bypass circuit of claim 1, wherein said light source is a blinking LED with a first state allowing current to flow through the device and a second state where the light source is an open circuit, whereby remaining light sources in the light string operate with current passing through the bypass resistor when the light source is in the second state. ~~a respective resistive bypass resistor being~~

~~connected in parallel with more than one light source, the failure of one of the light sources thereby only affecting a limited number of the plurality of light sources.~~

14. (Original) The resistor bypass circuit of claim 1 being utilized in AC or DC circuits powered form a power source selected from the list consisting of batteries, step down transformers, AC utility power, or converters from AC to DC or DC to AC power, pulsed DC, and filtered or unfiltered DC, or partially filtered AC.

15. (Original) A resistor bypass circuit for a series lighting circuit comprising a plurality of serially connected incandescent light sources and a bypass resistor being connected in parallel with at least one of the respective light sources, each respective light source being low wattage when conducting and being capable operating on a one hundred percent duty cycle as desired.

16. (Original) The resistor bypass circuit of claim 15, where the circuit is series-parallel connected.

17. (Original) A method of forming a resistor bypass circuit for a series lighting circuit comprising serially connecting a plurality of light sources, connecting a bypass resistor in parallel with at least one of the respective light sources, and to be capable of operating on a one hundred percent duty cycle as desired.

18. (Original) The method of claim 17, including forming the light source of an incandescent bulb.

19. (Original) The method of claim 17, including forming the light source of a semiconductor.

20. (Original) The method of claim 19, including forming the light source of an LED.

21-25. (Canceled)

REMARKS

The Listing of Claims includes the status identifiers of claims 21-25 to correct the issues noted in the Notice of Non-Compliant Amendment, which was issued against the Preliminary Amendment filed on September 3, 2020. The above preliminary amendment is made to amend claims 1, 3-8, and 13 for this Continuation application filing.

Also submitted is a declaration under 37 CFR 1.131 with respect to the date of invention.

Applicant respectfully requests that this preliminary amendment be entered into the record prior to calculation of the filing fee and prior to examination and consideration of the above-identified application.

If a telephone conference would be helpful in resolving any issues concerning this communication, please contact Applicant's attorney of record, Michael B. Lasky at (952) 253-4106.

Respectfully submitted,

Hamre, Schumann, Mueller & Larson, P.C.

Customer No. 52835

Date: October 14, 2020

By: __/Michael Lasky/_____
Michael B. Lasky
Reg. No. 29,555
MBL/yik

IN THE UNITED STATES PATENT AND TRADEMARK OFFICE

Applicant:	Altamura	Examiner:	Unknown
Serial No.:	16/693,552	Group Art Unit:	Unknown
Filed:	25 November 2019	Docket No.:	40617.0493USC4
Title:	Resistive bypass for series lighting circuit		

Declaration of Steven Altamura
Under
37 C.F.R. §1.131

Mail Stop Amendment
Commissioner for Patents
P.O. Box 1450
Alexandria, VA 22313-1450

Sir:

1. I am Steven Altamura, an employee of Seasonal Specialties, Inc., the assignee of the above identified patent application and the inventor of the subject matter of the above application.

2. I began work on this invention in 2005 and began documenting my work on paper on January 2006.

3. My employer was interested in finding a solution to the problem of series light strings, typically used for holiday or ornamental lighting, failing if a single bulb burning out.

4. At the time, in 2005 and early 2006 most light strings were still using incandescent bulbs since they were much less expensive than LED elements, but I was working on a by-pass circuit for both LED and incandescent elements. Both LED and incandescent elements have the same failure problem which can benefit similarly with a solution, such as described in the above patent application.

5. My first written documentation of this concept is dated January 12, 2006 and written in my own hand. I scanned this document into my computer shortly thereafter. See Exhibit A.

6. I documented in writing further refinements of this bypass concept on Jan 31, 2006 and Feb 27, 2006, showing an illumination element having a bypass resistor in the base of a mini-lamp socket. The socket is used to hold either incandescent or LED elements. See Exhibits B, C and D.

7. I built a prototype of the subject matter of Exhibits A, B, C and D in the early spring of 2006, in order to have it reviewed by a potential customer. Such review would normally occur in March/April of every year.

8. The invention as disclosed in USSN 60/876,868 was submitted to our patent attorneys for drafting into a patent application as early as June 2006.

9. A provisional application according to this invention was filed on 11 Dec 2006 as USSN 60/876,868.

I hereby declare that all statements made herein of my own knowledge are true and that all statements made on information and belief are believed to be true; and further that these statements are made with the knowledge that willful false statements and the like so made are punishable by fine or imprisonment, or both, under 18 U.S.C.§1001 and that such willful false statements may jeopardize the validity of the application or any patent issued thereon.

Steven Altamura

26 August 2020

Electronic Acknowledgement Receipt

EFS ID:	40845215
Application Number:	16693552
International Application Number:	
Confirmation Number:	8833
Title of Invention:	RESISTIVE BYPASS FOR SERIES LIGHTING CIRCUIT
First Named Inventor/Applicant Name:	Steven J. Altamura
Customer Number:	52835
Filer:	Michael B. Lasky/Yelena Kase
Filer Authorized By:	Michael B. Lasky
Attorney Docket Number:	40617.0493USC4
Receipt Date:	14-OCT-2020
Filing Date:	25-NOV-2019
Time Stamp:	16:41:56
Application Type:	Utility under 35 USC 111(a)

Payment information:

Submitted with Payment	no

File Listing:

Document Number	Document Description	File Name	File Size(Bytes)/ Message Digest	Multi Part /.zip	Pages (if appl.)
1		Preliminary_Amendment_Response_0493USC4.pdf	97506 f6bad1ff05c10f6818e04e1c32663f3de5cf9f50	yes	5

	Multipart Description/PDF files in .zip description		
	Document Description	**Start**	**End**
	Applicant Arguments/Remarks Made in an Amendment	5	5
	Claims	2	4
	Preliminary Amendment	1	1

Warnings:

Information:

2	Miscellaneous Incoming Letter	Declaration_Altamura.pdf	509535 910fd7997f48390e14d1e0aa7f1ce878040a8af8	no	2

Warnings:

Information:

Total Files Size (in bytes):	607041

This Acknowledgement Receipt evidences receipt on the noted date by the USPTO of the indicated documents, characterized by the applicant, and including page counts, where applicable. It serves as evidence of receipt similar to a Post Card, as described in MPEP 503.

New Applications Under 35 U.S.C. 111
If a new application is being filed and the application includes the necessary components for a filing date (see 37 CFR 1.53(b)-(d) and MPEP 506), a Filing Receipt (37 CFR 1.54) will be issued in due course and the date shown on this Acknowledgement Receipt will establish the filing date of the application.
National Stage of an International Application under 35 U.S.C. 371
If a timely submission to enter the national stage of an international application is compliant with the conditions of 35 U.S.C. 371 and other applicable requirements a Form PCT/DO/EO/903 indicating acceptance of the application as a national stage submission under 35 U.S.C. 371 will be issued in addition to the Filing Receipt, in due course.
New International Application Filed with the USPTO as a Receiving Office
If a new international application is being filed and the international application includes the necessary components for an international filing date (see PCT Article 11 and MPEP 1810), a Notification of the International Application Number and of the International Filing Date (Form PCT/RO/105) will be issued in due course, subject to prescriptions concerning national security, and the date shown on this Acknowledgement Receipt will establish the international filing date of the application.

PTO/SB/06 (09-11)
Approved for use through 1/31/2014. OMB 0651-0032
U.S. Patent and Trademark Office; U.S. DEPARTMENT OF COMMERCE
Under the Paperwork Reduction Act of 1995, no persons are required to respond to a collection of information unless it displays a valid OMB control number.

PATENT APPLICATION FEE DETERMINATION RECORD Substitute for Form PTO-875	Application or Docket Number 16/693,552	Filing Date 11/25/2019	☐ To be Mailed

ENTITY: ☐ LARGE ☑ SMALL ☐ MICRO

APPLICATION AS FILED - PART I

FOR	(Column 1) NUMBER FILED	(Column 2) NUMBER EXTRA		RATE ($)	FEE ($)
☐ BASIC FEE (37 CFR 1.16(a), (b), or (c))	N/A	N/A		N/A	
☐ SEARCH FEE (37 CFR 1.16(k), (i), or (m))	N/A	N/A		N/A	
☐ EXAMINATION FEE (37 CFR 1.16(o), (p), or (q))	N/A	N/A		N/A	
TOTAL CLAIMS (37 CFR 1.16(i))	minus 20 =	*		x $50 =	
INDEPENDENT CLAIMS (37 CFR 1.16(h))	minus 3 =	*		x $230 =	
☐ APPLICATION SIZE FEE (37 CFR 1.16(s))	If the specification and drawings exceed 100 sheets of paper, the application size fee due is $310 ($155 for small entity) for each additional 50 sheets or fraction thereof. See 35 U.S.C. 41(a)(1)(G) and 37 CFR 1.16(s).				
☐ MULTIPLE DEPENDENT CLAIM PRESENT (37 CFR 1.16(j))					
* If the difference in column 1 is less than zero, enter "0" in column 2.				TOTAL	

APPLICATION AS AMENDED - PART II

AMENDMENT	10/14/2020	(Column 1) CLAIMS REMAINING AFTER AMENDMENT		(Column 2) HIGHEST NUMBER PREVIOUSLY PAID FOR	(Column 3) PRESENT EXTRA		RATE ($)	ADDITIONAL FEE ($)
	Total (37 CFR 1.16(i))	* 20	Minus	** 20	= 0		x $50 =	0
	Independent (37 CFR 1.16(h))	* 3	Minus	*** 3	= 0		x $240 =	0
	☐ Application Size Fee (37 CFR 1.16(s))							
	☐ FIRST PRESENTATION OF MULTIPLE DEPENDENT CLAIM (37 CFR 1.16(j))							
							TOTAL ADD'L FEE	0

AMENDMENT		(Column 1) CLAIMS REMAINING AFTER AMENDMENT		(Column 2) HIGHEST NUMBER PREVIOUSLY PAID FOR	(Column 3) PRESENT EXTRA		RATE ($)	ADDITIONAL FEE ($)
	Total (37 CFR 1.16(i))	*	Minus	**	=		x $0 =	
	Independent (37 CFR 1.16(h))	*	Minus	***	=		x $0 =	
	☐ Application Size Fee (37 CFR 1.16(s))							
	☐ FIRST PRESENTATION OF MULTIPLE DEPENDENT CLAIM (37 CFR 1.16(j))							
							TOTAL ADD'L FEE	

* If the entry in column 1 is less than the entry in column 2, write "0" in column 3.	SLIE
** If the "Highest Number Previously Paid For" IN THIS SPACE is less than 20, enter "20".	/SHARON M WEST/
*** If the "Highest Number Previously Paid For" IN THIS SPACE is less than 3, enter "3".	
The "Highest Number Previously Paid For" (Total or Independent) is the highest number found in the appropriate box in column 1.	

This collection of information is required by 37 CFR 1.16. The information is required to obtain or retain a benefit by the public which is to file (and by the USPTO to process) an application. Confidentiality is governed by 35 U.S.C. 122 and 37 CFR 1.14. This collection is estimated to take 12 minutes to complete, including gathering, preparing, and submitting the completed application form to the USPTO. Time will vary depending upon the individual case. Any comments on the amount of time you require to complete this form and/or suggestions for reducing this burden, should be sent to the Chief Information Officer, U.S. Patent and Trademark Office, U.S. Department of Commerce, P.O. Box 1450, Alexandria, VA 22313-1450. DO NOT SEND FEES OR COMPLETED FORMS TO THIS ADDRESS. **SEND TO: Commissioner for Patents, P.O. Box 1450, Alexandria, VA 22313-1450.**

If you need assistance in completing the form, call 1-800-PTO-9199 and select option 2.

UNITED STATES PATENT AND TRADEMARK OFFICE

UNITED STATES DEPARTMENT OF COMMERCE
United States Patent and Trademark Office
Address: COMMISSIONER FOR PATENTS
P.O. Box 1450
Alexandria, Virginia 22313-1450
www.uspto.gov

APPLICATION NO.	FILING DATE	FIRST NAMED INVENTOR	ATTORNEY DOCKET NO.	CONFIRMATION NO.
16/693,552	11/25/2019	Steven J. Altamura	40617.0493USC4	8833

52835 7590 03/04/2021
HAMRE, SCHUMANN, MUELLER & LARSON, P.C.
45 South Seventh Street
Suite 2700
Minneapolis, MN 55402-1683

EXAMINER
HINES, ANNE M

ART UNIT	PAPER NUMBER
2879	

NOTIFICATION DATE	DELIVERY MODE
03/04/2021	ELECTRONIC

Please find below and/or attached an Office communication concerning this application or proceeding.

The time period for reply, if any, is set in the attached communication.

Notice of the Office communication was sent electronically on above-indicated "Notification Date" to the following e-mail address(es):

PTOMail@hsml.com

Office Action Summary	Application No. 16/693,552	Applicant(s) Altamura, Steven J.	
	Examiner ANNE M HINES	Art Unit 2879	AIA (FITF) Status No

-- The MAILING DATE of this communication appears on the cover sheet with the correspondence address --

Period for Reply

A SHORTENED STATUTORY PERIOD FOR REPLY IS SET TO EXPIRE 3 MONTHS FROM THE MAILING DATE OF THIS COMMUNICATION.

- Extensions of time may be available under the provisions of 37 CFR 1.136(a). In no event, however, may a reply be timely filed after SIX (6) MONTHS from the mailing date of this communication.
- If NO period for reply is specified above, the maximum statutory period will apply and will expire SIX (6) MONTHS from the mailing date of this communication.
- Failure to reply within the set or extended period for reply will, by statute, cause the application to become ABANDONED (35 U.S.C. § 133). Any reply received by the Office later than three months after the mailing date of this communication, even if timely filed, may reduce any earned patent term adjustment. See 37 CFR 1.704(b).

Status

1)☑ Responsive to communication(s) filed on 10/14/2020.

☐ A declaration(s)/affidavit(s) under **37 CFR 1.130(b)** was/were filed on _____.

2a)☐ This action is **FINAL.** 2b) ☑ This action is non-final.

3)☐ An election was made by the applicant in response to a restriction requirement set forth during the interview on _____; the restriction requirement and election have been incorporated into this action.

4)☐ Since this application is in condition for allowance except for formal matters, prosecution as to the merits is closed in accordance with the practice under *Ex parte Quayle*, 1935 C.D. 11, 453 O.G. 213.

Disposition of Claims*

5) ☑ Claim(s) 1-20 is/are pending in the application.

5a) Of the above claim(s) _____ is/are withdrawn from consideration.

6) ☐ Claim(s) _____ is/are allowed.

7) ☑ Claim(s) 1-3 and 14-20 is/are rejected.

8) ☑ Claim(s) 4-13 is/are objected to.

9) ☐ Claim(s) _____ are subject to restriction and/or election requirement

* If any claims have been determined allowable, you may be eligible to benefit from the **Patent Prosecution Highway** program at a participating intellectual property office for the corresponding application. For more information, please see http://www.uspto.gov/patents/init_events/pph/index.jsp or send an inquiry to **PPHfeedback@uspto.gov.**

Application Papers

10)☐ The specification is objected to by the Examiner.

11)☑ The drawing(s) filed on 11/25/2019 is/are: a)☑ accepted or b)☐ objected to by the Examiner.

Applicant may not request that any objection to the drawing(s) be held in abeyance. See 37 CFR 1.85(a).

Replacement drawing sheet(s) including the correction is required if the drawing(s) is objected to. See 37 CFR 1.121(d).

Priority under 35 U.S.C. § 119

12)☐ Acknowledgment is made of a claim for foreign priority under 35 U.S.C. § 119(a)-(d) or (f).

Certified copies:

a)☐ All b)☐ Some** c)☐ None of the:

1.☐ Certified copies of the priority documents have been received.

2.☐ Certified copies of the priority documents have been received in Application No. _____.

3.☐ Copies of the certified copies of the priority documents have been received in this National Stage application from the International Bureau (PCT Rule 17.2(a)).

** See the attached detailed Office action for a list of the certified copies not received.

Attachment(s)

1) ☑ Notice of References Cited (PTO-892)

2) ☑ Information Disclosure Statement(s) (PTO/SB/08a and/or PTO/SB/08b) Paper No(s)/Mail Date _____.

3) ☐ Interview Summary (PTO-413) Paper No(s)/Mail Date _____.

4) ☐ Other: _____.

DETAILED ACTION

Notice of Pre-AIA or AIA Status

The present application is being examined under the pre-AIA first to invent provisions.

Double Patenting

A rejection based on double patenting of the "same invention" type finds its support in the language of 35 U.S.C. 101 which states that "whoever invents or discovers any new and useful process... may obtain a patent therefor..." (Emphasis added). Thus, the term "same invention," in this context, means an invention drawn to identical subject matter. See *Miller v. Eagle Mfg. Co.*, 151 U.S. 186 (1894); *In re Vogel*, 422 F.2d 438, 164 USPQ 619 (CCPA 1970); *In re Ockert*, 245 F.2d 467, 114 USPQ 330 (CCPA 1957).

A statutory type (35 U.S.C. 101) double patenting rejection can be overcome by canceling or amending the claims that are directed to the same invention so they are no longer coextensive in scope. The filing of a terminal disclaimer cannot overcome a double patenting rejection based upon 35 U.S.C. 101.

Claims 1 and 3 is/are rejected under 35 U.S.C. 101 as claiming the same invention as that of claim 3 of prior U.S. Patent No. 10,492,282. This is a statutory double patenting rejection.

Claim Rejections - 35 USC § 102

In the event the determination of the status of the application as subject to AIA 35 U.S.C. 102 and 103 (or as subject to pre-AIA 35 U.S.C. 102 and 103) is incorrect, any correction of the statutory basis for the rejection will not be considered a new ground of rejection if the prior art relied upon, and the rationale supporting the rejection, would be the same under either status.

The following is a quotation of the appropriate paragraphs of pre-AIA 35 U.S.C. 102 that form the basis for the rejections under this section made in this Office action:

> A person shall be entitled to a patent unless –
>
> (b) the invention was patented or described in a printed publication in this or a foreign country or in public use or on sale in this country, more than one year prior to the date of application for patent in the United States.

Claim(s) 17 is/are rejected under pre-AIA 35 U.S.C. 102(b) as being anticipated by Gershen et al. (US 5886423).

Regarding claim 1, Gershen discloses a method of forming a resistor bypass circuit for a series lighting circuit comprising a plurality of serially connected light sources (12 & 14 & 16 & 18 & 20; Column 4, Lines 25-40), connecting a bypass resistor being connected in parallel with at least one of the respective light sources (38; Column 5, Line 58 to Column 6, Line 10), and to be capable of operating on a one hundred percent duty cycle as desired (Column 4, Lines 25-30). Note that the phrase 'capable operating on a one hundred percent duty cycle' is considered a process of operating the device and is not considered to limit the structure of the device so long as it is capable of performing the claimed function; the device of Gershen is considered as being so capable.

Claim Rejections - 35 USC § 103

In the event the determination of the status of the application as subject to AIA 35 U.S.C. 102 and 103 (or as subject to pre-AIA 35 U.S.C. 102 and 103) is incorrect, any correction of the statutory basis for the rejection will not be considered a new ground of rejection if the prior art relied upon, and the rationale supporting the rejection, would be the same under either status.

The following is a quotation of pre-AIA 35 U.S.C. 103(a) which forms the basis for all obviousness rejections set forth in this Office action:

> (a) A patent may not be obtained though the invention is not identically disclosed or described as set forth in section 102, if the differences between the subject matter sought to be patented and the prior art are such that the subject matter as a whole would have been obvious at the time the invention was made to a person having ordinary skill in the art to which said subject matter pertains. Patentability shall not be negatived by the manner in which the invention was made.

Claims 1-2, 14-20 is/are rejected under pre-AIA 35 U.S.C. 103(a) as being unpatentable over Gershen et al. (US 5886423).

Regarding claims 1, Gershen discloses a resistor bypass circuit for a series lighting circuit comprising a plurality of serially connected light sources (12 & 14 & 16 & 18 & 20; Column 4, Lines 25-40) and a bypass resistor being connected in parallel with at least one of the respective light sources (38; Column 5, Line 58 to Column 6, Line 10), being capable of operating on a one hundred percent duty cycle (Column 4, Lines 25-30). Note that the phrase 'capable operating on a one hundred percent duty cycle' is considered a process of operating the device and is not considered to limit the structure of the device so long as it is capable of performing the claimed function; the device of Gershen is considered as being so capable. Gershen is silent as to the particular type of bulb in the circuit, though does disclose that the light bulbs may be for a Christmas tree (Column 1, Lines 10-20).

However, it would have been obvious to one of ordinary skill in the art to have the bulbs be LEDs since these are a known type of bulb for use in lighting Christmas trees.

Therefore, it would have been obvious to one of ordinary skill in the art to have the bulbs of Gershen be semiconductors since these are a known type of bulb for use in lighting Christmas trees.

Regarding claim 2, Gershen further discloses wherein the circuit is series---parallel connected (12 & 14 & 16 & 18 & 20; Column 4, Lines 25-40; 38; Column 5, Line 58 to Column 6, Line 10).

Regarding claim 14, Gershen further discloses wherein the circuit is being used in an AC or DC circuit powered from a power source selected from the list consisting of batteries, step

down transformers, AC utility power, or converters from AC to DC or DC to AC power, pulsed DC, and filtered or unfiltered DC, or partially filtered AC (22; Column 8, Lines 38-58).

Regarding claims 15, Gershen discloses a resistor bypass circuit for a series lighting circuit comprising a plurality of serially connected light sources (12 & 14 & 16 & 18 & 20; Column 4, Lines 25-40) and a bypass resistor being connected in parallel with at least one of the respective light sources (38; Column 5, Line 58 to Column 6, Line 10), being capable of operating on a one hundred percent duty cycle (Column 4, Lines 25-30). Note that the phrase 'capable operating on a one hundred percent duty cycle' is considered a process of operating the device and is not considered to limit the structure of the device so long as it is capable of performing the claimed function; the device of Gershen is considered as being so capable. Gershen is silent as to the particular type of bulb in the circuit, though does disclose that the light bulbs may be for a Christmas tree (Column 1, Lines 10-20).
However, it would have been obvious to one of ordinary skill in the art to have the bulbs be be incandescent since these are a known type of bulb for use in lighting Christmas trees.

Therefore, it would have been obvious to one of ordinary skill in the art to have the bulbs of Gershen be incandescent since these are a known type of bulb for use in lighting Christmas trees.

Regarding claim 16, Gershen further discloses wherein the circuit is series---- parallel connected (12 & 14 & 16 & 18 & 20; Column 4, Lines 25-40; 38; Column 5, Line 58 to Column 6, Line 10).

Regarding claim 18, Gershen teaches the invention of claim 17 but is silent as to the particular type of bulb in the circuit, though does disclose that the light bulbs may be for a Christmas tree (Column 1, Lines 10-20). However, it would have been obvious to one of ordinary skill in the art to have the bulbs be incandescent since these are a known type of bulb for use in lighting Christmas trees. Therefore, it would have been obvious to one of o rdinary skill

in the art to have the bulbs of Gershen be incandescent since these are a known type of bulb for use in lighting Christmas trees.

Regarding claim 19, Gershen teaches the invention of claim 17 but is silent as to the particular type of bulb in the circuit, though does disclose that the light bulbs may be for a Christmas tree (Column 1, Lines 10-20). However, it would have been obvious to one of ordinary skill in the art to have the bulbs be semiconductors since these are a known type of bulb for use in lighting Christmas trees. Therefore, it would have been obvious to one of ordinary skill in the art to have the bulbs of Gershen be semiconductors since these are a known type of bulb for use in lighting Christmas trees.

Regarding claim 20, Gershen teaches the invention of claim 17 but is silent as to the particular type of bulb in the circuit, though does disclose that the light bulbs may be for a Christmas tree (Column 1, Lines 10-20). However, it would have been obvious to one of ordinary skill in the art to have the bulbs be LEDs since these are a known type of bulb for use in lighting Christmas trees. Therefore, it would have been obvious to one of ordinary skill in the art to have the bulbs of Gershen be LEDs since these are a known type of bulb for use in lighting Christmas trees.

Allowable Subject Matter

Claims 4-13 are objected to as being dependent upon a rejected base claim, but would be allowable if rewritten in independent form including all of the limitations of the base claim and any intervening claims.

Any inquiry concerning this communication or earlier communications from the examiner should be directed to ANNE M HINES whose telephone number is (571)272-2285. The examiner can normally be reached on M-F: 8:00-4:30.

If attempts to reach the examiner by telephone are unsuccessful, the examiner's supervisor, Georgia Epps can be reached on 571-272-2328. The fax phone number for the organization where this application or proceeding is assigned is 571-273-8300.

Information regarding the status of an application may be obtained from the Patent Application Information Retrieval (PAIR) system. Status information for published applications may be obtained from either Private PAIR or Public PAIR. Status information for unpublished applications is available through Private PAIR only. For more information about the PAIR system, see http://pair-direct.uspto.gov. Should you have questions on access to the Private PAIR system, contact the Electronic Business Center (EBC) at 866-217-9197 (toll-free).

/Anne M Hines/
Primary Examiner
Art Unit 2879

Notice of References Cited	Application/Control No. 16/693,552	Applicant(s)/Patent Under Reexamination Altamura, Steven J.	
	Examiner ANNE M HINES	Art Unit 2879	Page 1 of 1

U.S. PATENT DOCUMENTS

*		Document Number Country Code-Number-Kind Code	Date MM-YYYY	Name	CPC Classification	US Classification
*	A	US-5886423-A	03-1999	Gershen; Bernard	H05B47/23	307/36
	B					
	C					
	D					
	E					
	F					
	G					
	H					
	I					
	J					
	K					
	L					
	M					

FOREIGN PATENT DOCUMENTS

*		Document Number Country Code-Number-Kind Code	Date MM-YYYY	Country	Name	CPC Classification
	N					
	O					
	P					
	Q					
	R					
	S					
	T					

NON-PATENT DOCUMENTS

*		Include as applicable: Author, Title Date, Publisher, Edition or Volume, Pertinent Pages)
	U	
	V	
	W	
	X	

*A copy of this reference is not being furnished with this Office action. (See MPEP § 707.05(a).)
Dates in MM-YYYY format are publication dates. Classifications may be US or foreign.

Doc code: IDS
Doc description: Information Disclosure Statement (IDS) Filed

PTO/SB/08a (02-18)
Approved for use through 11/30/2020. OMB 0651-0031
U.S. Patent and Trademark Office; U.S. DEPARTMENT OF COMMERCE
Under the Paperwork Reduction Act of 1995, no persons are required to respond to a collection of information unless it contains a valid OMB control number.

INFORMATION DISCLOSURE STATEMENT BY APPLICANT

(Not for submission under 37 CFR 1.99)

Application Number	16693552
Filing Date	2019-11-25
First Named Inventor	Steven J. Altamura
Art Unit	
Examiner Name	
Attorney Docket Number	40617.0493USC4

U.S.PATENTS Remove

Examiner Initial*	Cite No	Patent Number	Kind Code[1]	Issue Date	Name of Patentee or Applicant of cited Document	Pages,Columns,Lines where Relevant Passages or Relevant Figures Appear
	1	7963670		2011-06-21	Yu	
	2	7666036		2010-02-23	Zou	
	3	9433057		2016-08-30	Janning	
	4	9510423		2016-11-29	Janning	

If you wish to add additional U.S. Patent citation information please click the Add button. Add

U.S.PATENT APPLICATION PUBLICATIONS Remove

Examiner Initial*	Cite No	Publication Number	Kind Code[1]	Publication Date	Name of Patentee or Applicant of cited Document	Pages,Columns,Lines where Relevant Passages or Relevant Figures Appear
	1					

If you wish to add additional U.S. Published Application citation information please click the Add button. Add

FOREIGN PATENT DOCUMENTS Remove

Examiner Initial*	Cite No	Foreign Document Number[3]	Country Code[2] i	Kind Code[4]	Publication Date	Name of Patentee or Applicant of cited Document	Pages,Columns,Lines where Relevant Passages or Relevant Figures Appear	T[5]

ALL REFERENCES CONSIDERED EXCEPT WHERE LINED THROUGH. /A.M.H/

INFORMATION DISCLOSURE STATEMENT BY APPLICANT (Not for submission under 37 CFR 1.99)		
	Application Number	16693552
	Filing Date	2019-11-25
	First Named Inventor	Steven J. Altamura
	Art Unit	
	Examiner Name	
	Attorney Docket Number	40617.0493USC4

	1							

If you wish to add additional Foreign Patent Document citation information please click the Add button Add

NON-PATENT LITERATURE DOCUMENTS Remove

Examiner Initials*	Cite No	Include name of the author (in CAPITAL LETTERS), title of the article (when appropriate), title of the item (book, magazine, journal, serial, symposium, catalog, etc), date, pages(s), volume-issue number(s), publisher, city and/or country where published.	T[5]
	1		

If you wish to add additional non-patent literature document citation information please click the Add button Add

EXAMINER SIGNATURE

Examiner Signature	/ANNE M HINES/	Date Considered	02/27/2021

*EXAMINER: Initial if reference considered, whether or not citation is in conformance with MPEP 609. Draw line through a citation if not in conformance and not considered. Include copy of this form with next communication to applicant.

[1] See Kind Codes of USPTO Patent Documents at www.USPTO.GOV or MPEP 901.04. [2] Enter office that issued the document, by the two-letter code (WIPO Standard ST.3). [3] For Japanese patent documents, the indication of the year of the reign of the Emperor must precede the serial number of the patent document. [4] Kind of document by the appropriate symbols as indicated on the document under WIPO Standard ST.16 if possible. [5] Applicant is to place a check mark here if English language translation is attached.

ALL REFERENCES CONSIDERED EXCEPT WHERE LINED THROUGH. /A.M.H/

INFORMATION DISCLOSURE STATEMENT BY APPLICANT (Not for submission under 37 CFR 1.99)		
	Application Number	16693552
	Filing Date	2019-11-25
	First Named Inventor	Steven J. Altamura
	Art Unit	
	Examiner Name	
	Attorney Docket Number	40617.0493USC4

CERTIFICATION STATEMENT

Please see 37 CFR 1.97 and 1.98 to make the appropriate selection(s):

That each item of information contained in the information disclosure statement was first cited in any communication from a foreign patent office in a counterpart foreign application not more than three months prior to the filing of the information disclosure statement. See 37 CFR 1.97(e)(1).

OR

☐ That no item of information contained in the information disclosure statement was cited in a communication from a foreign patent office in a counterpart foreign application, and, to the knowledge of the person signing the certification after making reasonable inquiry, no item of information contained in the information disclosure statement was known to any individual designated in 37 CFR 1.56(c) more than three months prior to the filing of the information disclosure statement. See 37 CFR 1.97(e)(2).

See attached certification statement.

The fee set forth in 37 CFR 1.17 (p) has been submitted herewith.

X A certification statement is not submitted herewith.

SIGNATURE

A signature of the applicant or representative is required in accordance with CFR 1.33, 10.18. Please see CFR 1.4(d) for the form of the signature.

Signature	/Michael Lasky/	Date (YYYY-MM-DD)	2020-01-28
Name/Print	Michael B. Lasky	Registration Number	29555

This collection of information is required by 37 CFR 1.97 and 1.98. The information is required to obtain or retain a benefit by the public which is to file (and by the USPTO to process) an application. Confidentiality is governed by 35 U.S.C. 122 and 37 CFR 1.14. This collection is estimated to take 1 hour to complete, including gathering, preparing and submitting the completed application form to the USPTO. Time will vary depending upon the individual case. Any comments on the amount of time you require to complete this form and/or suggestions for reducing this burden, should be sent to the Chief Information Officer, U.S. Patent and Trademark Office, U.S. Department of Commerce, P.O. Box 1450, Alexandria, VA 22313-1450. DO NOT SEND FEES OR COMPLETED FORMS TO THIS ADDRESS. **SEND TO: Commissioner for Patents, P.O. Box 1450, Alexandria, VA 22313-1450.**

Privacy Act Statement

The Privacy Act of 1974 (P.L. 93-579) requires that you be given certain information in connection with your submission of the attached form related to a patent application or patent. Accordingly, pursuant to the requirements of the Act, please be advised that: (1) the general authority for the collection of this information is 35 U.S.C. 2(b)(2); (2) furnishing of the information solicited is voluntary; and (3) the principal purpose for which the information is used by the U.S. Patent and Trademark Office is to process and/or examine your submission related to a patent application or patent. If you do not furnish the requested information, the U.S. Patent and Trademark Office may not be able to process and/or examine your submission, which may result in termination of proceedings or abandonment of the application or expiration of the patent.

The information provided by you in this form will be subject to the following routine uses:

1. The information on this form will be treated confidentially to the extent allowed under the Freedom of Information Act (5 U.S.C. 552) and the Privacy Act (5 U.S.C. 552a). Records from this system of records may be disclosed to the Department of Justice to determine whether the Freedom of Information Act requires disclosure of these record s.

2. A record from this system of records may be disclosed, as a routine use, in the course of presenting evidence to a court, magistrate, or administrative tribunal, including disclosures to opposing counsel in the course of settlement negotiations.

3. A record in this system of records may be disclosed, as a routine use, to a Member of Congress submitting a request involving an individual, to whom the record pertains, when the individual has requested assistance from the Member with respect to the subject matter of the record.

4. A record in this system of records may be disclosed, as a routine use, to a contractor of the Agency having need for the information in order to perform a contract. Recipients of information shall be required to comply with the requirements of the Privacy Act of 1974, as amended, pursuant to 5 U.S.C. 552a(m).

5. A record related to an International Application filed under the Patent Cooperation Treaty in this system of records may be disclosed, as a routine use, to the International Bureau of the World Intellectual Property Organization, pursuant to the Patent Cooperation Treaty.

6. A record in this system of records may be disclosed, as a routine use, to another federal agency for purposes of National Security review (35 U.S.C. 181) and for review pursuant to the Atomic Energy Act (42 U.S.C. 218(c)).

7. A record from this system of records may be disclosed, as a routine use, to the Administrator, General Services, or his/her designee, during an inspection of records conducted by GSA as part of that agency's responsibility to recommend improvements in records management practices and programs, under authority of 44 U.S.C. 2904 and 2906. Such disclosure shall be made in accordance with the GSA regulations governing inspection of records for this purpose, and any other relevant (i.e., GSA or Commerce) directive. Such disclosure shall not be used to make determinations about individuals.

8. A record from this system of records may be disclosed, as a routine use, to the public after either publication of the application pursuant to 35 U.S.C. 122(b) or issuance of a patent pursuant to 35 U.S.C. 151. Further, a record may be disclosed, subject to the limitations of 37 CFR 1.14, as a routine use, to the public if the record was filed in an application which became abandoned or in which the proceedings were terminated and which application is referenced by either a published application, an application open to public inspections or an issued patent.

9. A record from this system of records may be disclosed, as a routine use, to a Federal, State, or local law enforcement agency, if the USPTO becomes aware of a violation or potential violation of law or regulation.

ALL REFERENCES CONSIDERED EXCEPT WHERE LINED THROUGH. /A.M.H/

Serial No. To be Assigned PATENT

IN THE UNITED STATES PATENT AND TRADEMARK OFFICE

Applicant:	Steven J. Altamura	Examiner:	TBD
Serial No.:	To be Assigned	Group Art Unit:	TBD
Filed:	November 25, 2019	Docket No.:	00617.0493-US-C4
Title:	RESISTIVE BYPASS FOR SERIES LIGHTING CIRCUIT		

INFORMATION DISCLOSURE STATEMENT UNDER 37 C.F.R.§1.97(b)

Mail Stop Patent application
Commissioner for Patents
P.O. Box 1450
Alexandria, VA 22313-1450

Dear Sir:

Applicant(s) respectfully submit(s) the items of information on the enclosed Form 1449 for the attention of the Examiner in the above-identified application.

This Information Disclosure Statement is being filed within three months of the filing of a national application other than a continued prosecution application under 37 C.F.R. 1.53(d); within three months of the date of entry of the national stage as set forth in 37 C.F.R. 1.491 in an international application; before the mailing date of a first Office Action on the merits, or before the mailing of a first Office Action after the filing of a request for continued examination under 37 C.F.R. 1.114. Accordingly, no fee is due for consideration of the items listed on the enclosed Form 1449.

A copy of each document or other information listed on the enclosed Form 1449 is enclosed in accordance with 37 C.F.R. §1.98(a)(2) and/or a copy of each document is not provided because it was previously cited by or submitted to the U.S. Patent and Trademark Office in a parent application in accordance with 37 C.F.R. §.1.98(d).

ALL REFERENCES CONSIDERED EXCEPT WHERE LINED THROUGH. /A.M.H/

No representation is made that a reference is "prior art" within the meaning of 35 U.S.C. §§102 and 103. In addition, Applicant(s) do(es) not represent that a reference has been thoroughly reviewed or that any relevance of any portion of a reference is intended, and reserve the right to establish otherwise under 37 C.F.R. §1.131 or others.

Consideration of the items listed is respectfully requested. According to M.P.E.P. §609, Applicant(s) request(s) that the Examiner return a copy of the attached Form 1449, marked as being considered and initialed by the Examiner, to the undersigned with the next official communication.

Authorization is hereby given to charge any additional fees or credit any overpayments that may be deemed necessary to Deposit Account Number 50-3478.

Respectfully submitted,

Hamre, Schumann, Mueller & Larson, P.C.

Customer No. 52835

Date: November 25, 2019 By: /Michael Lasky/

Michael B. Lasky
Reg. No. 29,555
MBL/jsa

INFORMATION DISCLOSURE STATEMENT PTO Form 1449	Docket Number 40617.0493USC4	Serial Number TBD
	Applicant(s) Steven J. Altamura	
	Filing Date November 25, 2019	Group Art Unit TBD

U.S. PATENT DOCUMENTS

EXAMINER INITIALS	REF	DOCUMENT NUMBER	DATE	NAME	CLASS	SUB-CLASS	FILING DATE (IF APPROPRIATE)
		1024495	04/30/1912	Booth			
		1868689	07/26/1932	Brander			
		2072337	03/02/1937	Kamm			
		2760120	08/21/1956	Fisherman			
		3345482	10/03/1967	Shih-Woo Lou			
		3912966	10/14/1975	Harnden, Jr.			
		4727449	02/23/1988	Fleck			
		4985001	01/15/1991	Nagai			
		5453664	09/26/1995	Harris			
		5777868	07/07/1998	Gibboney, Jr.			
		5886423	03/23/1999	Gershen et al.			
		6084357	07/04/2000	Janning			
		6283797	09/04/2001	Wu			
		6323597	11/27/2001	Janning			
		6344716	02/05/2002	Gibboney, Jr.			
		6580182	06/17/2003	Janning			
		6597125	07/22/2003	Janning			
		6765313	07/20/2004	Janning			
		6929383	08/16/2005	Janning			
		7042116	05/09/2006	Janning			
		7166968	01/23/2007	Janning			
		7178961	02/20/2007	Janning			
		7261458	08/28/2007	Janning			
		2003/0117021	06/26/2003	Janning			
		2005/0174065	08/11/2005	Janning			
		2005/0205971	09/22/2005	Janning			
		1510847	04/18/1922	Holder			
		1865689	06/25/1929	Brander			
		2152228	05/05/1937	Waters			
		2760120	10/26/1955	Fisherman			
		7342327	03/11/2008	Janning			
		6690103	02/2004	Uke			
		6555948	04/2003	Noll			
		4464600	08/1984	Kosmatka et al.			
		4463278	07/1984	Kosmatka et al.			
		3942063	03/1976	Winter et al.			
		3868230	02/1975	Krukonis			
		3461921	08/1969	Ackerman			
		3260888	07/1966	Webb			
		2145911	02/1939	Anderson Waldemar et al.			
		4629943	12/1986	Ponce, Jr.			
		7851981	12/14/2010	Altamura			
		9900968	02/20/2018	Altamura			
		2018/0199419	0712/2018	Altamura			

Examiner: /ANNE M HINES/	Date Considered: 02/27/2021

ALL REFERENCES CONSIDERED EXCEPT WHERE LINED THROUGH. /A.M.H/

Bibliographic Data

Application No: 16/693,552

Foreign Priority claimed: ○ Yes ◉ No

35 USC 119 (a-d) conditions met: ☐ Yes ☑ No ☐ Met After Allowance

Verified and Acknowledged: /ANNE M HINES/ [ ]

Examiner's Signature Initials

Title: RESISTIVE BYPASS FOR SERIES LIGHTING CIRCUIT

FILING or 371(c) DATE	CLASS	GROUP ART UNIT	ATTORNEY DOCKET NO.
11/25/2019 **RULE**	445	2879	40617.0493USC4

APPLICANTS

Seasonal Specialties, LLC, Eden Prairie, MN, UNITED STATES

INVENTORS

Steven J. Altamura, Scarsdale, NY, UNITED STATES

CONTINUING DATA

This application is a CON of 15899264 02/19/2018 PAT 10492282

15899264 is a CON of 14840705 08/31/2015 PAT 9900968

14840705 is a CON of 14052124 10/11/2013ABN

14052124 is a CON of 12947488 11/16/2010ABN

12947488 is a DIV of 11962964 12/21/2007 PAT 7851981

11962964 has PRO of 60876868 12/22/2006

FOREIGN APPLICATIONS

IF REQUIRED, FOREIGN LICENSE GRANTED**

12/16/2019

**** SMALL ENTITY ****

STATE OR COUNTRY

UNITED STATES

ADDRESS

HAMRE, SCHUMANN, MUELLER & LARSON, P.C.
45 South Seventh Street
Suite 2700
Minneapolis, MN 55402-1683
UNITED STATES

FILING FEE RECEIVED

$785

Search Notes	Application/Control No.	Applicant(s)/Patent Under Reexamination
	16/693,552	Altamura, Steven J.
	Examiner	**Art Unit**
	ANNE M HINES	2879

CPC - Searched*		
Symbol	**Date**	**Examiner**
H05B39/041; 37/036	02/27/2021	AMH
H01J9/00	02/27/2021	AMH
H01K3/00	02/27/2021	AMH
F21S4/00	02/27/2021	AMH
F21V19/0005	02/27/2021	AMH
F21W2121/04	02/27/2021	AMH

CPC Combination Sets - Searched*		
Symbol	**Date**	**Examiner**

US Classification - Searched*			
Class	**Subclass**	**Date**	**Examiner**

* See search history printout included with this form or the SEARCH NOTES box below to determine the scope of the search.

Search Notes		
Search Notes	**Date**	**Examiner**
PE2E SEARCH; see attached history	02/27/2021	AMH
inventor search in DAV	02/27/2021	AMH
reviewed prosecution history for parent cases	02/27/2021	AMH

Search Notes	Application/Control No.	Applicant(s)/Patent Under Reexamination
	16/693,552	Altamura, Steven J.
	Examiner	**Art Unit**
	ANNE M HINES	2879

Interference Search			
US Class/CPC Symbol	**US Subclass/CPC Group**	**Date**	**Examiner**

PE2E SEARCH - Search History (Prior Art)

Ref #	Hits	Search Query	DBs	Default Operator	Plurals	British Equivalents	Time Stamp
L1	7	(bulb lamp).ab. and (filament with position$3) and (bypass with resistor)	US-PGPUB; USPAT; USOCR	OR	OFF	OFF	2017/06/16 09:46 AM
L2	13	("4629943").URPN.	USPAT	OR	OFF	OFF	2017/06/16 09:58 AM
L3	253	(bulb lamp).ab. and (filament with position$3) and (resistor)	US-PGPUB; USPAT; USOCR	OR	OFF	OFF	2017/06/16 10:26 AM
L4	0	("2010/0045186").URPN.	USPAT	OR	OFF	OFF	2017/06/16 11:28 AM
L5	5	(("3458756") or ("2044256") or ("3718879")).PN.	US-PGPUB; USPAT; USOCR	OR	ON	ON	2017/06/16 11:41 AM
L6	6	("3458756").URPN.	USPAT	OR	OFF	OFF	2017/06/16 11:49 AM
L7	1	"14/840705"	US-PGPUB; USPAT; USOCR	OR	OFF	OFF	2017/06/16 02:05 PM
L8	1	"14/052124"	US-PGPUB; USPAT; USOCR	OR	OFF	OFF	2017/06/16 02:06 PM
L9	217	H05B39/041.cpc.	US-PGPUB; USPAT; USOCR	OR	OFF	OFF	2017/06/16 03:08 PM
L10	170	H01J9/00.cpc.	US-PGPUB; USPAT; USOCR	OR	OFF	OFF	2017/06/16 03:08 PM
L11	180	H05B37/036.cpc.	US-PGPUB; USPAT; USOCR	OR	OFF	OFF	2017/10/12 02:05 PM
L12	348	H01K3/00.cpc.	US-PGPUB; USPAT; USOCR	OR	OFF	OFF	2017/10/12 02:05 PM
L13	106	F21S4/00.cpc.	US-PGPUB; USPAT; USOCR	OR	OFF	OFF	2017/10/12 02:10 PM
L14	849	F21V19/0005.cpc.	US-PGPUB; USPAT; USOCR	OR	OFF	OFF	2017/10/12 02:11 PM
L15	520	F21W2121/04.cpc.	US-PGPUB; USPAT; USOCR	OR	OFF	OFF	2017/10/12 02:11 PM
L16	35	(bulb lamp).ab. and	US-PGPUB; USPAT;	OR	OFF	OFF	2018/04/13

		(filament same series) and (bypass with resistor)	USOCR				11:15 AM
L17	18	("3818263" | "3836814" | "3869631" | "4435671").PN. OR ("4629943").URPN.	US-PGPUB; USPAT; USOCR	OR	OFF	OFF	2018/04/13 11:20 AM
L18	229	H05B39/041.cpc.	US-PGPUB; USPAT; USOCR	OR	OFF	OFF	2018/04/13 11:32 AM
L19	171	H01J9/00.cpc.	US-PGPUB; USPAT; USOCR	OR	OFF	OFF	2018/04/13 11:32 AM
L20	191	H05B37/036.cpc.	US-PGPUB; USPAT; USOCR	OR	OFF	OFF	2018/04/13 11:32 AM
L21	349	H01K3/00.cpc.	US-PGPUB; USPAT; USOCR	OR	OFF	OFF	2018/04/13 11:32 AM
L22	107	F21S4/00.cpc.	US-PGPUB; USPAT; USOCR	OR	OFF	OFF	2018/04/13 11:32 AM
L23	856	F21V19/0005.cpc.	US-PGPUB; USPAT; USOCR	OR	OFF	OFF	2018/04/13 11:32 AM
L24	532	F21W2121/04.cpc.	US-PGPUB; USPAT; USOCR	OR	OFF	OFF	2018/04/13 11:32 AM
L25	16	(L18 L19 L20 L21 L22 L23 L24) and (bypass with resistor)	US-PGPUB; USPAT; USOCR	OR	OFF	OFF	2018/04/13 11:32 AM
L26	0	("2009/0167198").URPN.	USPAT	OR	OFF	OFF	2018/04/13 11:33 AM
L27	186	(L18 L19 L20 L21 L22 L23 L24) and (string with light) and (shunt resistor)	US-PGPUB; USPAT; USOCR	OR	OFF	OFF	2018/04/13 11:36 AM
L28	620	((string tree Christmas) with light).ab. and (resistor)	US-PGPUB; USPAT; USOCR	OR	OFF	OFF	2018/04/13 02:44 PM
L29	18	(LED.U/C. same twinkl$3).ab.	US-PGPUB; USPAT; USOCR	OR	OFF	OFF	2018/04/13 03:27 PM
L35	162	(("20080211415") or ("20110062875") or ("20150382439") or ("20140042903") or ("9900968") or ("7851981") or ("20080018260") or ("7339325") or ("9089030") or	US-PGPUB; USPAT; USOCR	OR	ON	ON	2019/05/01 03:25 PM

		("20130140997") or ("20130300302") or ("8492990") or ("8450935") or ("9781792") or ("20110148311") or ("20150216005") or ("5495147") or ("7963670") or ("20050122723") or ("20140197738") or ("20050174065") or ("20070273296") or ("8896217") or ("20020043943") or ("20080164821") or ("20060082223") or ("20080252220") or ("20050110427") or ("7279809") or ("20050024877") or ("20080129214") or ("8410720") or ("8710764") or ("20090129077") or ("20180049289") or ("20140197743") or ("20140184080") or ("10028349") or ("20140015414") or ("6084357") or ("9468062") or ("20090251068") or ("20040130331") or ("7145343") or ("20150181682") or ("9807836") or ("20170006681") or ("6157139") or ("9713211") or ("6984984") or ("20030198048") or ("7029145") or ("20050041422") or ("20080037262") or ("7086758") or ("20060043974") or ("5994845") or ("20110018436") or ("9380685") or ("6580182") or ("20160143097") or ("20130214685") or ("8517583") or ("20140361697") or ("9516716") or ("9247597") or					

		("6762563") or ("7597456") or ("20180343718") or ("20030209997") or ("20090309501") or ("7946730") or ("20070063706") or ("20170150560") or ("20170188426") or ("7432717") or ("4727449") or ("20060055250") or ("6323597") or ("20110068702") or ("20100289415") or ("7296913") or ("20060012997") or ("20080024070") or ("8823290") or ("20050041423") or ("20170215246") or ("20140217926") or ("9986617") or ("7250730") or ("5777868") or ("20070164683") or ("7391161") or ("20100207533") or ("20070075646") or ("8044599") or ("20110089852") or ("20090295300") or ("20150233566") or ("20080129213") or ("7166968") or ("20110068701") or ("7777430") or ("20100320499") or ("20120049742") or ("10264637") or ("7732942") or ("20080130288") or ("8016440") or ("20090021185") or ("9295117") or ("8669709") or ("20140036505") or ("9049768") or ("20170202061") or ("7847486") or ("9420644") or ("20170303353") or ("20040246640") or ("8400081") or ("20090261706") or ("20140049189") or ("20180116030") or					

		("7042116") or ("20080157688") or ("9622316") or ("7976191") or ("9999109") or ("20100148673") or ("8587205") or ("6765313")).PN. or (("20030117022") or ("20020101118") or ("20050225979") or ("20030117021") or ("20020047594") or ("7114830") or ("9253849") or ("9338853") or ("6734678") or ("20160081147") or ("9380657") or ("6710602") or ("20030102869") or ("20140361695") or ("20100045186") or ("20070029937") or ("20140168986") or ("6860628") or ("7342327") or ("20020135376") or ("20040012959") or ("4675575") or ("9661703") or ("9429280") or ("20140312787") or ("8632215") or ("20110260647") or ("20130169159") or ("9237619") or ("9341359") or ("5655830")).PN.					
L36	136	(("20080211415") or ("20080018260") or ("5495147") or ("7963670") or ("20050122723") or ("20050174065") or ("20020043943") or ("20080164821") or ("20060082223") or ("20080252220") or ("20050110427") or ("20080129214") or ("20090129077") or ("20040130331") or ("20030198048") or ("20050041422") or ("20080037262") or	US-PGPUB; USPAT; USOCR	OR	ON	ON	2019/05/02 08:29 AM

		("6580182") or ("20130214685") or ("6762563") or ("7597456") or ("4727449") or ("6323597") or ("20050041423") or ("7250730") or ("7391161") or ("20080129213") or ("8016440") or ("20090021185") or ("20080157688") or ("20050225979") or ("20100045186") or ("20140168986") or ("4675575") or ("5655830") or ("5886423") or ("20150241044") or ("7508141") or ("20050057187") or ("7276858") or ("4651061") or ("20070228999") or ("20050168156") or ("7679292") or ("20070195527") or ("6900093") or ("20080094837") or ("20020021573") or ("20030011538") or ("7364322") or ("6211626") or ("6528954") or ("20140152185") or ("5343122") or ("20070076426") or ("5957564") or ("20060022611") or ("20030080697") or ("6072280") or ("20030067302") or ("20030076051") or ("4358717") or ("20050170629") or ("7053560") or ("20060103320") or ("20040155609") or ("4870325") or ("6518707") or ("5015918") or ("6292901") or ("8085163") or ("7481570") or ("6830358") or ("20080183081") or					

		("20050179400") or ("5008595") or ("7276911") or ("6786625") or ("20070018594") or ("20040062041") or ("7453217") or ("4792729") or ("7344275") or ("20040046510") or ("20020101362") or ("6388393") or ("20060193131") or ("20120120649") or ("20100237790") or ("6599000") or ("7946731") or ("5646486") or ("20080094832") or ("8004203") or ("7642501") or ("7661852") or ("20030076281") or ("7436675") or ("6086220") or ("7598686") or ("5663719") or ("6158882") or ("7180250") or ("7067992") or ("6400098") or ("20140218914") or ("9497821") or ("6577080") or ("6166496") or ("6700333") or ("5012157") or ("7323849") or ("20030072145") or ("5345149") or ("20060145636") or ("5686799") or ("20100172127") or ("20060221609") or ("5798619") or ("20070058365") or ("7390115") or ("5894200") or ("20140183946") or ("7274302") or ("20140239832") or ("2924748") or ("5936599") or ("3443106") or ("4290057") or ("20100283391") or ("9706614") or					

L37	3	("6150771") or ("8704462") or ("7656103")).PN. "10492282"	US-PGPUB; USPAT	OR	ON	ON	2021/02/27 02:54 PM

PE2E SEARCH - Search History (Interference)

There are no Interference searches to show.

IN THE UNITED STATES PATENT AND TRADEMARK OFFICE

Applicant:	Steven J. Altamura	Examiner:	Hines, Anne M.
Serial No.:	16/693552	Group Art Unit:	2879
Filed:	25 November 2019	Docket No.:	40617.0493USC4
Title:	RESISTIVE BYPASS FOR SERIES LIGHTING CIRCUIT		

AMENDMENT AND RESPONSE UNDER 37 C.F.R. §1.111
AND REQUEST FOR INTERVIEW

Mail Stop Amendment
Commissioner for Patents
P.O. Box 1450
Alexandria, VA 22313-1450

Dear Sir:

This paper is submitted in response to the Office Action dated 4 March 2021, Applicant respectfully requests favorable reconsideration of this application in view of the following amendments and remarks.

Amendments to the Claims are reflected in the Listing of Claims that begins on page 2 of this paper and replaces the Listing of Claims in the previous Preliminary Amendment that did not include correct status identifiers for claims 21-25.

Remarks begin on page 5 of this paper.

AMENDMENTS TO THE CLAIMS

This listing of claims will replace all prior versions, and listings, of claims in the application.

1. (Currently Amended) A resistor bypass circuit for a series lighting circuit comprising a plurality of serially connected LED light sources and a bypass resistor being connected in parallel with at least one of the respective light sources, said bypass resistor being in circuit and conducting current at all times when current is flowing through the circuit regardless of whether the LED light sources are conducting current therethrough and wherein said bypass resistor is capable operating on a one hundred percent duty cycle.

2. (Original) The resistor bypass circuit of claim 1, where the circuit is series-parallel connected.

3. (Previously Presented) The resistor bypass circuit of claim 1 wherein at least one of the light sources is a semiconductor providing a twinkling effect, and wherein the semiconductor light source utilizes electronic circuits that control the flashing rate of the light source.

4. (Currently Amended) A resistor bypass circuit for a series lighting circuit comprising a plurality of serially connected LED light sources and a bypass resistor being connected in parallel with at least one of the respective light sources, said bypass resistor being in circuit and conducting current at all times when current is flowing through the circuit regardless of whether the LED light sources are conducting current therethrough and wherein said bypass resistor is capable operating on a one hundred percent duty cycle ~~The resistor bypass circuit of claim 1,~~ further including an LED flashing light source which includes a flashing circuit which causes the entire light circuit to flash.

5. (Previously Presented) The resistor bypass circuit of claim 1, wherein the LED light source uses 0.20 watts or less.

6. (Currently Amended) The resistor bypass circuit of claim 1 ~~4~~, at least one of the light sources is a semiconductor light source providing a twinkling effect.

7. (Previously Presented) The resistor bypass circuit of claim 1, at least one of the light sources is a semiconductor light source utilizing electronic circuits that control the flashing rate of the light source, which would only affect the individual lighting element as the resistive bypass would allow current to continue to flow in remaining lighting elements in the series circuit.

8. (Currently Amended) A resistor bypass circuit for a series lighting circuit comprising a plurality of serially connected LED light sources and a bypass resistor being connected in parallel with at least one of the respective light sources, said bypass resistor being in circuit and conducting current at all times when current is flowing through the circuit regardless of whether the LED light sources are conducting current therethrough and ~~The resistor bypass circuit of claim 1~~ wherein the resistance of the bypass resistor is equal to or greater than the inherent resistance of the light source to which the resistor is attached, thereby minimizing the burn out potential of other light sources in the light string.

9. (Currently Amended) The resistor bypass circuit of claim 8 ~~5~~, the light source being a semiconductor light source for providing color changing characteristics.

10. (Currently Amended) The resistor bypass circuit of claim 8 ~~9~~, the semiconductor light source utilizing LED packages that incorporate two or more LED chips, and an integrated circuit (IC), the integrated circuit controlling each LED chip in respective LED packages independently.

11. (Original) The resistor bypass circuit of claim 10, the IC controlling the current

and/or voltage to the individual LED chips in the LED package, the control providing for the mixing of the LED chip colors to get various resultant colors.

12. (Original) The resistor bypass circuit of claim 11, the control only affecting individual lighting element, the bypass resistor providing for current continuing to flow in remaining lighting elements in the series circuit.

13. (Previously Presented) The resistor bypass circuit of claim 1, wherein said light source is a blinking LED with a first state allowing current to flow through the device and a second state where the light source is an open circuit, whereby remaining light sources in the light string operate with current passing through the bypass resistor when the light source is in the second state.

14. (Original) The resistor bypass circuit of claim 1 being utilized in AC or DC circuits powered form a power source selected from the list consisting of batteries, step down transformers, AC utility power, or converters from AC to DC or DC to AC power, pulsed DC, and filtered or unfiltered DC, or partially filtered AC.

15-25. (Cancelled)

REMARKS/ARGUMENTS

Claims 1-20 are pending in the application. Claims 15-25 have been cancelled. Claims 1, 4, 6, and 8-10 have been amended. No new matter has been added. No admission is made as to the correctness of the pending rejection. Reconsideration of the claims is respectfully requested.

Applicant thanks the Examiner for conditional allowance of claims 4-13.

Interview

An interview has been requested. The examiner is requested to hold action on this case until the interview has been completed.

Double Patenting Rejections

Claims 1 and 3 are rejected under 35 U.S.C. § 101 as claiming the same invention as that of claim 3 of prior U.S. Patent No. 10,492,282.

Claim Rejections – 35 U.S.C. § 102

Claim 17 is rejected under 35 U.S.C. § 102(b) as being anticipated by Gershen *et al.* (U.S. Patent No. 5,886,423).

Claim Rejections – 35 U.S.C. § 103

Claims 1-2 and 14-20 are rejected under 35 U.S.C. § 103(a) as being unpatentable over Gershen.

Claims 4-13 are considered allowable.

Certain claims have been cancelled in order to expedite allowance. Not admission is made as to the correctness of the pending rejection.

Various claims are rejected on the basis of the Gershen reference. Gershen discloses a Zener diode in parallel with a lamp and is explicitly directed to a bypass circuit which requires a breakover voltage to be engaged.

A close read of Gershen shows the following:

1. There is no disclosure of a bypass resistor solution. There is a disclosure of a *current limiting resistor* in series with a threshold device (Zener diode) where a resistor is added to solve the runaway current problem which occurs with Zener diodes. Note: The Examiner has referred to resistors 12,14, 16, 18 and 20 as bypass resistors, but in fact, they are loads (lights) and not bypass resistors.
2. The teaching of Gershen only provides for Zener diodes and SCRs with a fixed breakover voltage as a bypass. This solution is inherently different because it creates no load on the circuit until engaged, but when engaged, it provides zero resistance to that portion of the circuit. If enough lamps fail, the circuit will overload because too much current is being bypassed through the Zener diodes, which do not limit current until they burn out. This teaching creates an expensive and unsuccessful solution.
3. The claimed invention does not use breakover devices. The claimed invention has resistive elements which are *constant* conductors. Gershen teaches away from that concept with breakover devices which are largely non-conducting.
4. Please see the following passages in Gershen:
    - **a.** Abstract: *The solid state switching means may be any device with a breakthrough voltage which is high enough that it does not conduct when all of the loads conduct current normally. When one of the loads is burned out,*

that load does not conduct current and the entire line voltage appears across the switching means in parallel with the burned out load. **[This confirms that the disclosure is to a breakover device which is not a resistive device].**

b. Col 4 lines 25-30: *The electric circuit according to the invention, as shown in FIG. 1, comprises plural loads 12, 14, 16, 18 and 20 connected in series across a voltage source 22 of voltage +A which may be 120 Volts, for example.* **[This confirms that the resistors the examiner is referring to are LOAD resistors, not bypass resistors.]**

c. Col 4 line 56-58: *More than one load light bulb could be burned out and the circuit will still operate, however, extra stress is placed on the remaining load light bulbs.* **[This confirms that the disclosure creates an extra stress problem, i.e. circuit overload because Zener diodes are not current limiting devices.]**

d. Col 6 lines 1-10: *The cathode of Zener diode 36 is connected to the anode of SCR 34 and the anode of the Zener diode 36 is connected to the gate of the SCR 34 through a current limiting resistor 38.* [**This confirms that resistor 38 is NOT a bypass resistor, but rather a current limiting resistor needed to fix a fault in the Gershen invention.]**

The examiner has asserted that it would be obvious for a skilled person to combine Gershen with Christmas tree lights to achieve the claimed invention. As indicated above, it is respectfully submitted that the Gershen reference is fundamentally lacking in a disclosure of the use of bypass resistors to maintain current flow across an LED. Gershen only discloses using breakover

components which have no current flow when under the breakover threshold. Even adding a current limiting resistor does not constitute a bypass resistor since it is not engaged in the current 100% of the time.

The sec 101 double patenting rejection is obviated by the amendments.

CONCLUSION

In view of the amendments and reasons provided above, it is believed that all pending claims are in condition for allowance. Applicant respectfully requests favorable reconsideration and early allowance of all pending claims.

If a telephone conference would be helpful in resolving any issues concerning this communication, please contact Applicant's attorney of record, Michael B. Lasky at (952) 253-4106.

Respectfully submitted,

Hamre, Schumann,
Mueller & Larson, P.C.
Customer No. 52835

Date: 27 May 2021

By: /Michael Lasky/
Michael B. Lasky
Reg. No. 29,555
MBL/nmh

PTOL-413A (07-16)
Approved for use through 11/30/2020. OMB 0651-0031
U.S. Patent and Trademark Office; U.S. DEPARTMENT OF COMMERCE

Applicant Initiated Interview Request Form

Application No.: 16/693552 First Named Applicant: Steven J. Altamura
Examiner: Hines, Anne M. Art Unit: 2879 Status of Application: Pending

Tentative Participants:
(1) Michael B. Lasky **(2)** Anne M. Hines
(3) _____ **(4)** _____

Proposed Date of Interview: 16 Jun 2021 **Proposed Time:** 12:00 p ET **(○AM○PM)**

Type of Interview Requested:
(1) ☐ **Telephonic** **(2)** ☐ **Personal** **(3)** ☑ **Video Conference**

Exhibit To Be Shown or Demonstrated: ☐ **YES** ☑ **NO**
If yes, provide brief description: _____

Issues To Be Discussed

Issues (Rej., Obj., etc)	Claims/ Fig. #s	Prior Art	Discussed	Agreed	Not Agreed
(1) 101,102,103	all	Gershen	☐	☐	☐
(2)			☐	☐	☐
(3)			☐	☐	☐
(4)			☐	☐	☐

☐ Continuation Sheet Attached ☑ Proposed Amendment or Arguments Attached
Brief Description of Arguments to be Presented: see amendment filed in PAIR

An interview was conducted on the above-identified application on _____

NOTE: This form should be completed and filed by applicant in advance of the interview (see MPEP § 713.01). If this form is signed by a registered practitioner not of record, the Office will accept this as an indication that he or she is authorized to conduct an interview on behalf of the principal (37 CFR 1.32(a)(3)) pursuant to 37 CFR 1.34. This is not a power of attorney to any above named practitioner. See the Instruction Sheet for this form, which is incorporated by reference. By signing this form, applicant or practitioner is certifying that he or she has read the Instruction Sheet. After the interview is conducted, applicant is advised to file a statement of the substance of this interview (37 CFR 1.133(b)) as soon as possible. This application will not be delayed from issue because of applicant's failure to submit a written record of this interview.

/Michael Lasky/
Applicant/Applicant's Representative Signature

Examiner/SPE Signature

Michael B. Lasky
Typed/Printed Name of Applicant or Representative

952-253-4106
Applicant's/Applicant's Representative's Telephone Number

29555
Registration Number, if applicable

This collection of information is required by 37 CFR 1.133. The information is required to obtain or retain a benefit by the public which is to file (and by the USPTO to process) an application. Confidentiality is governed by 35 U.S.C. 122 and 37 CFR 1.11 and 1.14. This collection is estimated to take 24 minutes to complete, including gathering, preparing, and submitting the completed application form to the USPTO. Time will vary depending upon the individual case. Any comments on the amount of time you require to complete this form and/or suggestions for reducing this burden, should be sent to the Chief Information Officer, U.S. Patent and Trademark Office, U.S. Department of Commerce, P.O. Box 1450, Alexandria, VA 22313-1450. DO NOT SEND FEES OR COMPLETED FORMS TO THIS ADDRESS.
If you need assistance in completing the form, call 1-800-PTO-9199 and select option 2.

Privacy Act Statement

The **Privacy Act of 1974 (P.L. 93-579)** requires that you be given certain information in connection with your submission of the attached form related to a patent application or patent. Accordingly, pursuant to the requirements of the Act, please be advised that: (1) the general authority for the collection of this information is 35 U.S.C. 2(b)(2); (2) furnishing of the information solicited is voluntary; and (3) the principal purpose for which the information is used by the U.S. Patent and Trademark Office is to process and/or examine your submission related to a patent application or patent. If you do not furnish the requested information, the U.S. Patent and Trademark Office may not be able to process and/or examine your submission, which may result in termination of proceedings or abandonment of the application or expiration of the patent.

The information provided by you in this form will be subject to the following routine uses:

1. The information on this form will be treated confidentially to the extent allowed under the Freedom of Information Act (5 U.S.C. 552) and the Privacy Act (5 U.S.C 552a). Records from this system of records may be disclosed to the Department of Justice to determine whether disclosure of these records is required by the Freedom of Information Act.
2. A record from this system of records may be disclosed, as a routine use, in the course of presenting evidence to a court, magistrate, or administrative tribunal, including disclosures to opposing counsel in the course of settlement negotiations.
3. A record in this system of records may be disclosed, as a routine use, to a Member of Congress submitting a request involving an individual, to whom the record pertains, when the individual has requested assistance from the Member with respect to the subject matter of the record.
4. A record in this system of records may be disclosed, as a routine use, to a contractor of the Agency having need for the information in order to perform a contract. Recipients of information shall be required to comply with the requirements of the Privacy Act of 1974, as amended, pursuant to 5 U.S.C. 552a(m).
5. A record related to an International Application filed under the Patent Cooperation Treaty in this system of records may be disclosed, as a routine use, to the International Bureau of the World Intellectual Property Organization, pursuant to the Patent Cooperation Treaty.
6. A record in this system of records may be disclosed, as a routine use, to another federal agency for purposes of National Security review (35 U.S.C. 181) and for review pursuant to the Atomic Energy Act (42 U.S.C. 218(c)).
7. A record from this system of records may be disclosed, as a routine use, to the Administrator, General Services, or his/her designee, during an inspection of records conducted by GSA as part of that agency's responsibility to recommend improvements in records management practices and programs, under authority of 44 U.S.C. 2904 and 2906. Such disclosure shall be made in accordance with the GSA regulations governing inspection of records for this purpose, and any other relevant (*i.e.*, GSA or Commerce) directive. Such disclosure shall not be used to make determinations about individuals.
8. A record from this system of records may be disclosed, as a routine use, to the public after either publication of the application pursuant to 35 U.S.C. 122(b) or issuance of a patent pursuant to 35 U.S.C. 151. Further, a record may be disclosed, subject to the limitations of 37 CFR 1.14, as a routine use, to the public if the record was filed in an application which became abandoned or in which the proceedings were terminated and which application is referenced by either a published application, an application open to public inspection or an issued patent.
9. A record from this system of records may be disclosed, as a routine use, to a Federal, State, or local law enforcement agency, if the USPTO becomes aware of a violation or potential violation of law or regulation.

Electronic Acknowledgement Receipt

EFS ID:	42836263
Application Number:	16693552
International Application Number:	
Confirmation Number:	8833
Title of Invention:	RESISTIVE BYPASS FOR SERIES LIGHTING CIRCUIT
First Named Inventor/Applicant Name:	Steven J. Altamura
Customer Number:	52835
Filer:	Michael B. Lasky/Nicole Heinz
Filer Authorized By:	Michael B. Lasky
Attorney Docket Number:	40617.0493USC4
Receipt Date:	27-MAY-2021
Filing Date:	25-NOV-2019
Time Stamp:	12:42:17
Application Type:	Utility under 35 USC 111(a)

Payment information:

Submitted with Payment	no

File Listing:

Document Number	Document Description	File Name	File Size(Bytes)/ Message Digest	Multi Part /.zip	Pages (if appl.)
1		Amendment.pdf	130224 552f4ed8f14170204d0bca8784da8753b8536143	yes	8

	Multipart Description/PDF files in .zip description		
	Document Description	**Start**	**End**
	Amendment/Req. Reconsideration-After Non-Final Reject	1	1
	Claims	2	4
	Applicant Arguments/Remarks Made in an Amendment	5	8

Warnings:

Information:

2	Letter Requesting Interview with Examiner	Interview_Request.pdf	434004 b0b81127ff739af0fb20574b313369e3efca530c	no	2

Warnings:

Information:

Total Files Size (in bytes):	564228

This Acknowledgement Receipt evidences receipt on the noted date by the USPTO of the indicated documents, characterized by the applicant, and including page counts, where applicable. It serves as evidence of receipt similar to a Post Card, as described in MPEP 503.

New Applications Under 35 U.S.C. 111
If a new application is being filed and the application includes the necessary components for a filing date (see 37 CFR 1.53(b)-(d) and MPEP 506), a Filing Receipt (37 CFR 1.54) will be issued in due course and the date shown on this Acknowledgement Receipt will establish the filing date of the application.
National Stage of an International Application under 35 U.S.C. 371
If a timely submission to enter the national stage of an international application is compliant with the conditions of 35 U.S.C. 371 and other applicable requirements a Form PCT/DO/EO/903 indicating acceptance of the application as a national stage submission under 35 U.S.C. 371 will be issued in addition to the Filing Receipt, in due course.
New International Application Filed with the USPTO as a Receiving Office
If a new international application is being filed and the international application includes the necessary components for an international filing date (see PCT Article 11 and MPEP 1810), a Notification of the International Application Number and of the International Filing Date (Form PCT/RO/105) will be issued in due course, subject to prescriptions concerning national security, and the date shown on this Acknowledgement Receipt will establish the international filing date of the application.

PTO/SB/06 (09-11)
Approved for use through 1/31/2014. OMB 0651-0032
U.S. Patent and Trademark Office; U.S. DEPARTMENT OF COMMERCE
Under the Paperwork Reduction Act of 1995, no persons are required to respond to a collection of information unless it displays a valid OMB control number.

PATENT APPLICATION FEE DETERMINATION RECORD Substitute for Form PTO-875	Application or Docket Number 16/693,552	Filing Date 11/25/2019	☐ To be Mailed

ENTITY: ☐ LARGE ☑ SMALL ☐ MICRO

APPLICATION AS FILED - PART I

FOR	(Column 1) NUMBER FILED	(Column 2) NUMBER EXTRA		RATE ($)	FEE ($)
☐ BASIC FEE (37 CFR 1.16(a), (b), or (c))	N/A	N/A		N/A	
☐ SEARCH FEE (37 CFR 1.16(k), (i), or (m))	N/A	N/A		N/A	
☐ EXAMINATION FEE (37 CFR 1.16(o), (p), or (q))	N/A	N/A		N/A	
TOTAL CLAIMS (37 CFR 1.16(i))	minus 20 =	*		x $50 =	
INDEPENDENT CLAIMS (37 CFR 1.16(h))	minus 3 =	*		x $230 =	
☐ APPLICATION SIZE FEE (37 CFR 1.16(s))	If the specification and drawings exceed 100 sheets of paper, the application size fee due is $310 ($155 for small entity) for each additional 50 sheets or fraction thereof. See 35 U.S.C. 41(a)(1)(G) and 37 CFR 1.16(s).				
☐ MULTIPLE DEPENDENT CLAIM PRESENT (37 CFR 1.16(j))					
* If the difference in column 1 is less than zero, enter "0" in column 2.				TOTAL	

APPLICATION AS AMENDED - PART II

AMENDMENT	05/27/2021	(Column 1) CLAIMS REMAINING AFTER AMENDMENT		(Column 2) HIGHEST NUMBER PREVIOUSLY PAID FOR	(Column 3) PRESENT EXTRA		RATE ($)	ADDITIONAL FEE ($)
	Total (37 CFR 1.16(i))	* 14	Minus	** 20	= 0		x $50 =	0
	Independent (37 CFR 1.16(h))	* 3	Minus	*** 3	= 0		x $240 =	0
	☐ Application Size Fee (37 CFR 1.16(s))							
	☐ FIRST PRESENTATION OF MULTIPLE DEPENDENT CLAIM (37 CFR 1.16(j))							
							TOTAL ADD'L FEE	0

AMENDMENT		(Column 1) CLAIMS REMAINING AFTER AMENDMENT		(Column 2) HIGHEST NUMBER PREVIOUSLY PAID FOR	(Column 3) PRESENT EXTRA		RATE ($)	ADDITIONAL FEE ($)
	Total (37 CFR 1.16(i))	*	Minus	**	=		x $0 =	
	Independent (37 CFR 1.16(h))	*	Minus	***	=		x $0 =	
	☐ Application Size Fee (37 CFR 1.16(s))							
	☐ FIRST PRESENTATION OF MULTIPLE DEPENDENT CLAIM (37 CFR 1.16(j))							
							TOTAL ADD'L FEE	

* If the entry in column 1 is less than the entry in column 2, write "0" in column 3.	LIE
** If the "Highest Number Previously Paid For" IN THIS SPACE is less than 20, enter "20".	/THERESA D DAWKINS/
*** If the "Highest Number Previously Paid For" IN THIS SPACE is less than 3, enter "3".	
The "Highest Number Previously Paid For" (Total or Independent) is the highest number found in the appropriate box in column 1.	

This collection of information is required by 37 CFR 1.16. The information is required to obtain or retain a benefit by the public which is to file (and by the USPTO to process) an application. Confidentiality is governed by 35 U.S.C. 122 and 37 CFR 1.14. This collection is estimated to take 12 minutes to complete, including gathering, preparing, and submitting the completed application form to the USPTO. Time will vary depending upon the individual case. Any comments on the amount of time you require to complete this form and/or suggestions for reducing this burden, should be sent to the Chief Information Officer, U.S. Patent and Trademark Office, U.S. Department of Commerce, P.O. Box 1450, Alexandria, VA 22313-1450. DO NOT SEND FEES OR COMPLETED FORMS TO THIS ADDRESS. **SEND TO: Commissioner for Patents, P.O. Box 1450, Alexandria, VA 22313-1450.**

If you need assistance in completing the form, call 1-800-PTO-9199 and select option 2.

UNITED STATES PATENT AND TRADEMARK OFFICE

UNITED STATES DEPARTMENT OF COMMERCE
United States Patent and Trademark Office
Address: COMMISSIONER FOR PATENTS
P.O. Box 1450
Alexandria, Virginia 22313-1450
www.uspto.gov

NOTICE OF ALLOWANCE AND FEE(S) DUE

52835 7590 06/09/2021
HAMRE, SCHUMANN, MUELLER & LARSON, P.C.
45 South Seventh Street
Suite 2700
Minneapolis, MN 55402-1683

EXAMINER
HINES, ANNE M

ART UNIT	PAPER NUMBER
2879	

DATE MAILED: 06/09/2021

APPLICATION NO.	FILING DATE	FIRST NAMED INVENTOR	ATTORNEY DOCKET NO.	CONFIRMATION NO.
16/693,552	11/25/2019	Steven J. Altamura	40617.0493USC4	8833

TITLE OF INVENTION: RESISTIVE BYPASS FOR SERIES LIGHTING CIRCUIT

APPLN. TYPE	ENTITY STATUS	ISSUE FEE DUE	PUBLICATION FEE DUE	PREV. PAID ISSUE FEE	TOTAL FEE(S) DUE	DATE DUE
nonprovisional	SMALL	$600	$0.00	$0.00	$600	09/09/2021

THE APPLICATION IDENTIFIED ABOVE HAS BEEN EXAMINED AND IS ALLOWED FOR ISSUANCE AS A PATENT. PROSECUTION ON THE MERITS IS CLOSED. THIS NOTICE OF ALLOWANCE IS NOT A GRANT OF PATENT RIGHTS. THIS APPLICATION IS SUBJECT TO WITHDRAWAL FROM ISSUE AT THE INITIATIVE OF THE OFFICE OR UPON PETITION BY THE APPLICANT. SEE 37 CFR 1.313 AND MPEP 1308.

THE ISSUE FEE AND PUBLICATION FEE (IF REQUIRED) MUST BE PAID WITHIN THREE MONTHS FROM THE MAILING DATE OF THIS NOTICE OR THIS APPLICATION SHALL BE REGARDED AS ABANDONED. THIS STATUTORY PERIOD CANNOT BE EXTENDED. SEE 35 U.S.C. 151. THE ISSUE FEE DUE INDICATED ABOVE DOES NOT REFLECT A CREDIT FOR ANY PREVIOUSLY PAID ISSUE FEE IN THIS APPLICATION. IF AN ISSUE FEE HAS PREVIOUSLY BEEN PAID IN THIS APPLICATION (AS SHOWN ABOVE), THE RETURN OF PART B OF THIS FORM WILL BE CONSIDERED A REQUEST TO REAPPLY THE PREVIOUSLY PAID ISSUE FEE TOWARD THE ISSUE FEE NOW DUE.

HOW TO REPLY TO THIS NOTICE:

I. Review the ENTITY STATUS shown above. If the ENTITY STATUS is shown as SMALL or MICRO, verify whether entitlement to that entity status still applies.

If the ENTITY STATUS is the same as shown above, pay the TOTAL FEE(S) DUE shown above.

If the ENTITY STATUS is changed from that shown above, on PART B - FEE(S) TRANSMITTAL, complete section number 5 titled "Change in Entity Status (from status indicated above)".

For purposes of this notice, small entity fees are 1/2 the amount of undiscounted fees, and micro entity fees are 1/2 the amount of small entity fees.

II. PART B - FEE(S) TRANSMITTAL, or its equivalent, must be completed and returned to the United States Patent and Trademark Office (USPTO) with your ISSUE FEE and PUBLICATION FEE (if required). If you are charging the fee(s) to your deposit account, section "4b" of Part B - Fee(s) Transmittal should be completed and an extra copy of the form should be submitted. If an equivalent of Part B is filed, a request to reapply a previously paid issue fee must be clearly made, and delays in processing may occur due to the difficulty in recognizing the paper as an equivalent of Part B.

III. All communications regarding this application must give the application number. Please direct all communications prior to issuance to Mail Stop ISSUE FEE unless advised to the contrary.

IMPORTANT REMINDER: Maintenance fees are due in utility patents issuing on applications filed on or after Dec. 12, 1980. It is patentee's responsibility to ensure timely payment of maintenance fees when due. More information is available at www.uspto.gov/PatentMaintenanceFees.

PART B - FEE(S) TRANSMITTAL

Complete and send this form, together with applicable fee(s), by mail or fax, or via EFS-Web.

By mail, send to: Mail Stop ISSUE FEE
Commissioner for Patents
P.O. Box 1450
Alexandria, Virginia 22313-1450

By fax, send to: (571)-273-2885

INSTRUCTIONS: This form should be used for transmitting the ISSUE FEE and PUBLICATION FEE (if required). Blocks 1 through 5 should be completed where appropriate. All further correspondence including the Patent, advance orders and notification of maintenance fees will be mailed to the current correspondence address as indicated unless corrected below or directed otherwise in Block 1, by (a) specifying a new correspondence address; and/or (b) indicating a separate "FEE ADDRESS" for maintenance fee notifications.

CURRENT CORRESPONDENCE ADDRESS (Note: Use Block 1 for any change of address)

52835 7590 06/09/2021
HAMRE, SCHUMANN, MUELLER & LARSON, P.C.
45 South Seventh Street
Suite 2700
Minneapolis, MN 55402-1683

Note: A certificate of mailing can only be used for domestic mailings of the Fee(s) Transmittal. This certificate cannot be used for any other accompanying papers. Each additional paper, such as an assignment or formal drawing, must have its own certificate of mailing or transmission.

Certificate of Mailing or Transmission

I hereby certify that this Fee(s) Transmittal is being deposited with the United States Postal Service with sufficient postage for first class mail in an envelope addressed to the Mail Stop ISSUE FEE address above, or being transmitted to the USPTO via EFS-Web or by facsimile to (571) 273-2885, on the date below.

(Typed or printed name)
(Signature)
(Date)

APPLICATION NO.	FILING DATE	FIRST NAMED INVENTOR	ATTORNEY DOCKET NO.	CONFIRMATION NO.
16/693,552	11/25/2019	Steven J. Altamura	40617.0493USC4	8833

TITLE OF INVENTION: RESISTIVE BYPASS FOR SERIES LIGHTING CIRCUIT

APPLN. TYPE	ENTITY STATUS	ISSUE FEE DUE	PUBLICATION FEE DUE	PREV. PAID ISSUE FEE	TOTAL FEE(S) DUE	DATE DUE
nonprovisional	SMALL	$600	$0.00	$0.00	$600	09/09/2021

EXAMINER	ART UNIT	CLASS-SUBCLASS
HINES, ANNE M	2879	445-027000

1. Change of correspondence address or indication of "Fee Address" (37 CFR 1.363).

❑ Change of correspondence address (or Change of Correspondence Address form PTO/SB/122) attached.

❑ "Fee Address" indication (or "Fee Address" Indication form PTO/SB/47; Rev 03-09 or more recent) attached. **Use of a Customer Number is required.**

2. For printing on the patent front page, list
(1) The names of up to 3 registered patent attorneys or agents OR, alternatively,
(2) The name of a single firm (having as a member a registered attorney or agent) and the names of up to 2 registered patent attorneys or agents. If no name is listed, no name will be printed.

1_____
2_____
3_____

3. ASSIGNEE NAME AND RESIDENCE DATA TO BE PRINTED ON THE PATENT (print or type)

PLEASE NOTE: Unless an assignee is identified below, no assignee data will appear on the patent. If an assignee is identified below, the document must have been previously recorded, or filed for recordation, as set forth in 37 CFR 3.11 and 37 CFR 3.81(a). Completion of this form is NOT a substitute for filing an assignment.

(A) NAME OF ASSIGNEE (B) RESIDENCE: (CITY and STATE OR COUNTRY)

Please check the appropriate assignee category or categories (will not be printed on the patent) : ❑ Individual ❑ Corporation or other private group entity ❑ Government

4a. Fees submitted: ❑Issue Fee ❑Publication Fee (if required) ❑Advance Order - # of Copies _____

4b. Method of Payment: *(Please first reapply any previously paid fee shown above)*

❑ Electronic Payment via EFS-Web ❑ Enclosed check ❑ Non-electronic payment by credit card (Attach form PTO-2038)

❑ The Director is hereby authorized to charge the required fee(s), any deficiency, or credit any overpayment to Deposit Account No. _____

5. **Change in Entity Status** (from status indicated above)

❑ Applicant certifying micro entity status. See 37 CFR 1.29

❑ Applicant asserting small entity status. See 37 CFR 1.27

❑ Applicant changing to regular undiscounted fee status.

NOTE: Absent a valid certification of Micro Entity Status (see forms PTO/SB/15A and 15B), issue fee payment in the micro entity amount will not be accepted at the risk of application abandonment.
NOTE: If the application was previously under micro entity status, checking this box will be taken to be a notification of loss of entitlement to micro entity status.
NOTE: Checking this box will be taken to be a notification of loss of entitlement to small or micro entity status, as applicable.

NOTE: This form must be signed in accordance with 37 CFR 1.31 and 1.33. See 37 CFR 1.4 for signature requirements and certifications.

Authorized Signature _____ Date _____

Typed or printed name _____ Registration No. _____

UNITED STATES PATENT AND TRADEMARK OFFICE

UNITED STATES DEPARTMENT OF COMMERCE
United States Patent and Trademark Office
Address: COMMISSIONER FOR PATENTS
P.O. Box 1450
Alexandria, Virginia 22313-1450
www.uspto.gov

APPLICATION NO.	FILING DATE	FIRST NAMED INVENTOR	ATTORNEY DOCKET NO.	CONFIRMATION NO.
16/693,552	11/25/2019	Steven J. Altamura	40617.0493USC4	8833

52835 7590 06/09/2021
HAMRE, SCHUMANN, MUELLER & LARSON, P.C.
45 South Seventh Street
Suite 2700
Minneapolis, MN 55402-1683

EXAMINER
HINES, ANNE M

ART UNIT	PAPER NUMBER
2879	

DATE MAILED: 06/09/2021

Determination of Patent Term Adjustment under 35 U.S.C. 154 (b)
(Applications filed on or after May 29, 2000)

The Office has discontinued providing a Patent Term Adjustment (PTA) calculation with the Notice of Allowance.

Section 1(h)(2) of the AIA Technical Corrections Act amended 35 U.S.C. 154(b)(3)(B)(i) to eliminate the requirement that the Office provide a patent term adjustment determination with the notice of allowance. See Revisions to Patent Term Adjustment, 78 Fed. Reg. 19416, 19417 (Apr. 1, 2013). Therefore, the Office is no longer providing an initial patent term adjustment determination with the notice of allowance. The Office will continue to provide a patent term adjustment determination with the Issue Notification Letter that is mailed to applicant approximately three weeks prior to the issue date of the patent, and will include the patent term adjustment on the patent. Any request for reconsideration of the patent term adjustment determination (or reinstatement of patent term adjustment) should follow the process outlined in 37 CFR 1.705.

Any questions regarding the Patent Term Extension or Adjustment determination should be directed to the Office of Patent Legal Administration at (571)-272-7702. Questions relating to issue and publication fee payments should be directed to the Customer Service Center of the Office of Patent Publication at 1-(888)-786-0101 or (571)-272-4200.

OMB Clearance and PRA Burden Statement for PTOL-85 Part B

The Paperwork Reduction Act (PRA) of 1995 requires Federal agencies to obtain Office of Management and Budget approval before requesting most types of information from the public. When OMB approves an agency request to collect information from the public, OMB (i) provides a valid OMB Control Number and expiration date for the agency to display on the instrument that will be used to collect the information and (ii) requires the agency to inform the public about the OMB Control Number's legal significance in accordance with 5 CFR 1320.5(b).

The information collected by PTOL-85 Part B is required by 37 CFR 1.311. The information is required to obtain or retain a benefit by the public which is to file (and by the USPTO to process) an application. Confidentiality is governed by 35 U.S.C. 122 and 37 CFR 1.14. This collection is estimated to take 30 minutes to complete, including gathering, preparing, and submitting the completed application form to the USPTO. Time will vary depending upon the individual case. Any comments on the amount of time you require to complete this form and/or suggestions for reducing this burden, should be sent to the Chief Information Officer, U.S. Patent and Trademark Office, U.S. Department of Commerce, P.O. Box 1450, Alexandria, Virginia 22313-1450. DO NOT SEND FEES OR COMPLETED FORMS TO THIS ADDRESS. SEND TO: Commissioner for Patents, P.O. Box 1450, Alexandria, Virginia 22313-1450. Under the Paperwork Reduction Act of 1995, no persons are required to respond to a collection of information unless it displays a valid OMB control number.

Privacy Act Statement

The Privacy Act of 1974 (P.L. 93-579) requires that you be given certain information in connection with your submission of the attached form related to a patent application or patent. Accordingly, pursuant to the requirements of the Act, please be advised that: (1) the general authority for the collection of this information is 35 U.S.C. 2(b)(2); (2) furnishing of the information solicited is voluntary; and (3) the principal purpose for which the information is used by the U.S. Patent and Trademark Office is to process and/or examine your submission related to a patent application or patent. If you do not furnish the requested information, the U.S. Patent and Trademark Office may not be able to process and/or examine your submission, which may result in termination of proceedings or abandonment of the application or expiration of the patent.

The information provided by you in this form will be subject to the following routine uses:

1. The information on this form will be treated confidentially to the extent allowed under the Freedom of Information Act (5 U.S.C. 552) and the Privacy Act (5 U.S.C 552a). Records from this system of records may be disclosed to the Department of Justice to determine whether disclosure of these records is required by the Freedom of Information Act.
2. A record from this system of records may be disclosed, as a routine use, in the course of presenting evidence to a court, magistrate, or administrative tribunal, including disclosures to opposing counsel in the course of settlement negotiations.
3. A record in this system of records may be disclosed, as a routine use, to a Member of Congress submitting a request involving an individual, to whom the record pertains, when the individual has requested assistance from the Member with respect to the subject matter of the record.
4. A record in this system of records may be disclosed, as a routine use, to a contractor of the Agency having need for the information in order to perform a contract. Recipients of information shall be required to comply with the requirements of the Privacy Act of 1974, as amended, pursuant to 5 U.S.C. 552a(m).
5. A record related to an International Application filed under the Patent Cooperation Treaty in this system of records may be disclosed, as a routine use, to the International Bureau of the World Intellectual Property Organization, pursuant to the Patent Cooperation Treaty.
6. A record in this system of records may be disclosed, as a routine use, to another federal agency for purposes of National Security review (35 U.S.C. 181) and for review pursuant to the Atomic Energy Act (42 U.S.C. 218(c)).
7. A record from this system of records may be disclosed, as a routine use, to the Administrator, General Services, or his/her designee, during an inspection of records conducted by GSA as part of that agency's responsibility to recommend improvements in records management practices and programs, under authority of 44 U.S.C. 2904 and 2906. Such disclosure shall be made in accordance with the GSA regulations governing inspection of records for this purpose, and any other relevant (i.e., GSA or Commerce) directive. Such disclosure shall not be used to make determinations about individuals.
8. A record from this system of records may be disclosed, as a routine use, to the public after either publication of the application pursuant to 35 U.S.C. 122(b) or issuance of a patent pursuant to 35 U.S.C. 151. Further, a record may be disclosed, subject to the limitations of 37 CFR 1.14, as a routine use, to the public if the record was filed in an application which became abandoned or in which the proceedings were terminated and which application is referenced by either a published application, an application open to public inspection or an issued patent.
9. A record from this system of records may be disclosed, as a routine use, to a Federal, State, or local law enforcement agency, if the USPTO becomes aware of a violation or potential violation of law or regulation.

Notice of Allowability	Application No. 16/693,552	Applicant(s) Altamura, Steven J.	
	Examiner ANNE M HINES	Art Unit 2879	AIA (FITF) Status No

-- The MAILING DATE of this communication appears on the cover sheet with the correspondence address--

All claims being allowable, PROSECUTION ON THE MERITS IS (OR REMAINS) CLOSED in this application. If not included herewith (or previously mailed), a Notice of Allowance (PTOL-85) or other appropriate communication will be mailed in due course. **THIS NOTICE OF ALLOWABILITY IS NOT A GRANT OF PATENT RIGHTS.** This application is subject to withdrawal from issue at the initiative of the Office or upon petition by the applicant. See 37 CFR 1.313 and MPEP 1308.

1. ☑ This communication is responsive to Amendment filed 5/27/2021.
   ☐ A declaration(s)/affidavit(s) under **37 CFR 1.130(b)** was/were filed on _____.

2. ☐ An election was made by the applicant in response to a restriction requirement set forth during the interview on _____; the restriction requirement and election have been incorporated into this action.

3. ☑ The allowed claim(s) is/are 1-14 . As a result of the allowed claim(s), you may be eligible to benefit from the **Patent Prosecution Highway** program at a participating intellectual property office for the corresponding application. For more information, please see **http://www.uspto.gov/patents/init_events/pph/index.jsp** or send an inquiry to **PPHfeedback@uspto.gov.**

4. ☐ Acknowledgment is made of a claim for foreign priority under 35 U.S.C. § 119(a)-(d) or (f).

   Certified copies:

   a) ☐ All b) ☐ Some *c) ☐ None of the:

   1. ☐ Certified copies of the priority documents have been received.
   2. ☐ Certified copies of the priority documents have been received in Application No. _____ .
   3. ☐ Copies of the certified copies of the priority documents have been received in this national stage application from the International Bureau (PCT Rule 17.2(a)).

   * Certified copies not received: _____ .

Applicant has THREE MONTHS FROM THE "MAILING DATE" of this communication to file a reply complying with the requirements noted below. Failure to timely comply will result in ABANDONMENT of this application.
THIS THREE-MONTH PERIOD IS NOT EXTENDABLE.

5. ☐ CORRECTED DRAWINGS (as "replacement sheets") must be submitted.
   ☐ including changes required by the attached Examiner's Amendment / Comment or in the Office action of Paper No./Mail Date _____ .

   Identifying indicia such as the application number (see 37 CFR 1.84(c)) should be written on the drawings in the front (not the back) of each sheet. Replacement sheet(s) should be labeled as such in the header according to 37 CFR 1.121(d).

6. ☐ DEPOSIT OF and/or INFORMATION about the deposit of BIOLOGICAL MATERIAL must be submitted. Note the attached Examiner's comment regarding REQUIREMENT FOR THE DEPOSIT OF BIOLOGICAL MATERIAL.

Attachment(s)

1. ☐ Notice of References Cited (PTO-892)
2. ☐ Information Disclosure Statements (PTO/SB/08), Paper No./Mail Date _____.
3. ☐ Examiner's Comment Regarding Requirement for Deposit of Biological Material _____.
4. ☐ Interview Summary (PTO-413), Paper No./Mail Date. _____.
5. ☐ Examiner's Amendment/Comment
6. ☑ Examiner's Statement of Reasons for Allowance
7. ☐ Other _____.

/ANNE M HINES/
Primary Examiner, Art Unit 2879

DETAILED ACTION

Notice of Pre-AIA or AIA Status

The present application is being examined under the pre-AIA first to invent provisions.

Response to Amendment

The amendment filed on May 27, 2021, has been entered and acknowledged by the Examiner.

Claims 1-14 are pending in the instant application.

Allowable Subject Matter

Claims 1-14 are allowed.

The following is an examiner's statement of reasons for allowance:

The amendments to independent claims 1, 4, and 8 render them allowable over the prior art; claims 2-3, 5-7, and 9-14 are allowable based on their dependence from one of the independent claims.

Any comments considered necessary by applicant must be submitted no later than the payment of the issue fee and, to avoid processing delays, should preferably accompany the issue fee. Such submissions should be clearly labeled "Comments on Statement of Reasons for Allowance."

Any inquiry concerning this communication or earlier communications from the examiner should be directed to ANNE M HINES whose telephone number is (571)272-2285. The examiner can normally be reached on M-F: 8:00-4:30.

If attempts to reach the examiner by telephone are unsuccessful, the examiner's supervisor, Georgia Epps can be reached on 571-272-2328. The fax phone number for the organization where this application or proceeding is assigned is 571-273-8300.

Information regarding the status of an application may be obtained from the Patent Application Information Retrieval (PAIR) system. Status information for published applications may be obtained from either Private PAIR or Public PAIR. Status information for unpublished applications is available through Private PAIR only. For more information about the PAIR system, see http://pair-direct.uspto.gov. Should you have questions on access to the Private PAIR system, contact the Electronic Business Center (EBC) at 866-217-9197 (toll-free).

/Anne M Hines/
Primary Examiner
Art Unit 2879

Bibliographic Data

Application No: 16/693,552

Foreign Priority claimed: ○ Yes ◉ No

35 USC 119 (a-d) conditions met: ☐ Yes ☑ No ☐ Met After Allowance

Verified and Acknowledged: /ANNE M HINES/ (Examiner's Signature) [ ] (Initials)

Title: RESISTIVE BYPASS FOR SERIES LIGHTING CIRCUIT

FILING or 371(c) DATE	CLASS	GROUP ART UNIT	ATTORNEY DOCKET NO.
11/25/2019 **RULE**	445	2879	40617.0493USC4

APPLICANTS

Seasonal Specialties, LLC, Eden Prairie, MN, UNITED STATES

INVENTORS

Steven J. Altamura, Scarsdale, NY, UNITED STATES

CONTINUING DATA

This application is a CON of 15899264 02/19/2018 PAT 10492282

15899264 is a CON of 14840705 08/31/2015 PAT 9900968

14840705 is a CON of 14052124 10/11/2013ABN

14052124 is a CON of 12947488 11/16/2010ABN

12947488 is a DIV of 11962964 12/21/2007 PAT 7851981

11962964 has PRO of 60876868 12/22/2006

FOREIGN APPLICATIONS

IF REQUIRED, FOREIGN LICENSE GRANTED**

12/16/2019

**** SMALL ENTITY ****

STATE OR COUNTRY

UNITED STATES

ADDRESS

HAMRE, SCHUMANN, MUELLER & LARSON, P.C.
45 South Seventh Street
Suite 2700
Minneapolis, MN 55402-1683
UNITED STATES

FILING FEE RECEIVED

$785

Issue Classification	Application/Control No.	Applicant(s)/Patent Under Reexamination
	16/693,552	Altamura, Steven J.
	Examiner	**Art Unit**
	ANNE M HINES	2879

CPC						
Symbol					**Type**	**Version**
H05B	/	39	/	041	F	2013-01-01
H05B	/	47	/	23	I	2020-01-01
H01J	/	9	/	00	I	2013-01-01
H01K	/	3	/	00	I	2013-01-01

CPC Combination Sets								
Symbol					**Type**	**Set**	**Ranking**	**Version**
	/		/					

NONE (Assistant Examiner)	(Date)	**Total Claims Allowed:** 14	
/ANNE M HINES/ Primary Examiner, Art Unit 2879 (Primary Examiner)	04 June 2021 (Date)	O.G. Print Claim(s) 1	O.G. Print Figure 2

Issue Classification	Application/Control No.	Applicant(s)/Patent Under Reexamination
	16/693,552	Altamura, Steven J.
	Examiner	**Art Unit**
	ANNE M HINES	2879

INTERNATIONAL CLASSIFICATION				
CLAIMED				
H05B	/	39	/	04

NON-CLAIMED				
	/		/	

US ORIGINAL CLASSIFICATION	
CLASS	**SUBCLASS**

CROSS REFERENCES(S)						
CLASS	**SUBCLASS (ONE SUBCLASS PER BLOCK)**					

NONE (Assistant Examiner) (Date)		**Total Claims Allowed:** 14	
/ANNE M HINES/ Primary Examiner, Art Unit 2879 (Primary Examiner) (Date)	04 June 2021	O.G. Print Claim(s) 1	O.G. Print Figure 2

Issue Classification	Application/Control No.	Applicant(s)/Patent Under Reexamination
	16/693,552	Altamura, Steven J.
	Examiner	**Art Unit**
	ANNE M HINES	2879

☐ Claims renumbered in the same order as presented by applicant ☐ CPA ☐ T.D. ☐ R.1.47

CLAIMS

Final	Original	Final	Original	Final	Original	Final	Original	Final	Original	Final	Original	Final	Original	Final	Original
1	1	12	10												
2	2	13	11												
3	3	14	12												
9	4	7	13												
4	5	8	14												
5	6														
6	7														
10	8														
11	9														

NONE (Assistant Examiner)	(Date)	**Total Claims Allowed:** 14	
/ANNE M HINES/ Primary Examiner, Art Unit 2879 (Primary Examiner)	04 June 2021 (Date)	O.G. Print Claim(s) 1	O.G. Print Figure 2

Search Notes	Application/Control No.	Applicant(s)/Patent Under Reexamination
	16/693,552	Altamura, Steven J.
	Examiner	**Art Unit**
	ANNE M HINES	2879

CPC - Searched*		
Symbol	**Date**	**Examiner**
H05B39/041; 37/036	02/27/2021	AMH
H01J9/00	02/27/2021	AMH
H01K3/00	02/27/2021	AMH
F21S4/00	02/27/2021	AMH
F21V19/0005	02/27/2021	AMH
F21W2121/04	02/27/2021	AMH

CPC Combination Sets - Searched*		
Symbol	**Date**	**Examiner**

US Classification - Searched*			
Class	**Subclass**	**Date**	**Examiner**

* See search history printout included with this form or the SEARCH NOTES box below to determine the scope of the search.

Search Notes		
Search Notes	**Date**	**Examiner**
PE2E SEARCH; see attached history	02/27/2021	AMH
inventor search in DAV	02/27/2021	AMH
reviewed prosecution history for parent cases	02/27/2021	AMH
updated previous searches	06/04/2021	AMH

Search Notes	Application/Control No.	Applicant(s)/Patent Under Reexamination
	16/693,552	Altamura, Steven J.
	Examiner	**Art Unit**
	ANNE M HINES	2879

Interference Search			
US Class/CPC Symbol	**US Subclass/CPC Group**	**Date**	**Examiner**
same	as above	06/04/2021	AMH

PE2E SEARCH - Search History (Prior Art)

Ref #	Hits	Search Query	DBs	Default Operator	Plurals	British Equivalents	Time Stamp
L1	7	(bulb lamp).ab. and (filament with position$3) and (bypass with resistor)	(US-PGPUB; USPAT; USOCR)	OR	OFF	OFF	2017/06/16 09:46 AM
L2	13	("4629943").URPN.	(USPAT)	OR	OFF	OFF	2017/06/16 09:58 AM
L3	253	(bulb lamp).ab. and (filament with position$3) and (resistor)	(US-PGPUB; USPAT; USOCR)	OR	OFF	OFF	2017/06/16 10:26 AM
L4	0	("2010/0045186").URPN.	(USPAT)	OR	OFF	OFF	2017/06/16 11:28 AM
L5	5	(("3458756") or ("2044256") or ("3718879")).PN.	(US-PGPUB; USPAT; USOCR)	OR	ON	ON	2017/06/16 11:41 AM
L6	6	("3458756").URPN.	(USPAT)	OR	OFF	OFF	2017/06/16 11:49 AM
L7	1	"14/840705"	(US-PGPUB; USPAT; USOCR)	OR	OFF	OFF	2017/06/16 02:05 PM
L8	1	"14/052124"	(US-PGPUB; USPAT; USOCR)	OR	OFF	OFF	2017/06/16 02:06 PM
L9	217	H05B39/041.cpc.	(US-PGPUB; USPAT; USOCR)	OR	OFF	OFF	2017/06/16 03:08 PM
L10	170	H01J9/00.cpc.	(US-PGPUB; USPAT; USOCR)	OR	OFF	OFF	2017/06/16 03:08 PM
L11	180	H05B37/036.cpc.	(US-PGPUB; USPAT; USOCR)	OR	OFF	OFF	2017/10/12 02:05 PM
L12	348	H01K3/00.cpc.	(US-PGPUB; USPAT; USOCR)	OR	OFF	OFF	2017/10/12 02:05 PM
L13	106	F21S4/00.cpc.	(US-PGPUB; USPAT; USOCR)	OR	OFF	OFF	2017/10/12 02:10 PM
L14	849	F21V19/0005.cpc.	(US-PGPUB; USPAT; USOCR)	OR	OFF	OFF	2017/10/12 02:11 PM
L15	520	F21W2121/04.cpc.	(US-PGPUB; USPAT; USOCR)	OR	OFF	OFF	2017/10/12 02:11 PM
L16	35	(bulb lamp).ab. and (filament same series) and (bypass with resistor)	(US-PGPUB; USPAT; USOCR)	OR	OFF	OFF	2018/04/13 11:15 AM
L17	18	("3818263" | "3836814" | "3869631" | "4435671").PN. OR ("4629943").URPN.	(US-PGPUB; USPAT; USOCR)	OR	OFF	OFF	2018/04/13 11:20 AM
L18	229	H05B39/041.cpc.	(US-PGPUB; USPAT; USOCR)	OR	OFF	OFF	2018/04/13 11:32 AM
L19	171	H01J9/00.cpc.	(US-PGPUB; USPAT; USOCR)	OR	OFF	OFF	2018/04/13 11:32 AM

L20	191	H05B37/036.cpc.	(US-PGPUB; USPAT; USOCR)	OR	OFF	OFF	2018/04/13 11:32 AM
L21	349	H01K3/00.cpc.	(US-PGPUB; USPAT; USOCR)	OR	OFF	OFF	2018/04/13 11:32 AM
L22	107	F21S4/00.cpc.	(US-PGPUB; USPAT; USOCR)	OR	OFF	OFF	2018/04/13 11:32 AM
L23	856	F21V19/0005.cpc.	(US-PGPUB; USPAT; USOCR)	OR	OFF	OFF	2018/04/13 11:32 AM
L24	532	F21W2121/04.cpc.	(US-PGPUB; USPAT; USOCR)	OR	OFF	OFF	2018/04/13 11:32 AM
L25	16	(L18 L19 L20 L21 L22 L23 L24) and (bypass with resistor)	(US-PGPUB; USPAT; USOCR)	OR	OFF	OFF	2018/04/13 11:32 AM
L26	0	("2009/0167198").URPN.	(USPAT)	OR	OFF	OFF	2018/04/13 11:33 AM
L27	186	(L18 L19 L20 L21 L22 L23 L24) and (string with light) and (shunt resistor)	(US-PGPUB; USPAT; USOCR)	OR	OFF	OFF	2018/04/13 11:36 AM
L28	620	((string tree Christmas) with light).ab. and (resistor)	(US-PGPUB; USPAT; USOCR)	OR	OFF	OFF	2018/04/13 02:44 PM
L29	18	(LED.U/C. same twinkl$3).ab.	(US-PGPUB; USPAT; USOCR)	OR	OFF	OFF	2018/04/13 03:27 PM
L35	162	(("20080211415") or ("20110062875") or ("20150382439") or ("20140042903") or ("9900968") or ("7851981") or ("20080018260") or ("7339325") or ("9089030") or ("20130140997") or ("20130300302") or ("8492990") or ("8450935") or ("9781792") or ("20110148311") or ("20150216005") or ("5495147") or ("7963670") or ("20050122723") or ("20140197738") or ("20050174065") or ("20070273296") or ("8896217") or ("20020043943") or ("20080164821") or ("20060082223") or ("20080252220") or ("20050110427") or ("7279809") or ("20050024877") or ("20080129214") or	(US-PGPUB; USPAT; USOCR)	OR	ON	ON	2019/05/01 03:25 PM

		("8410720") or ("8710764") or ("20090129077") or ("20180049289") or ("20140197743") or ("20140184080") or ("10028349") or ("20140015414") or ("6084357") or ("9468062") or ("20090251068") or ("20040130331") or ("7145343") or ("20150181682") or ("9807836") or ("20170006681") or ("6157139") or ("9713211") or ("6984984") or ("20030198048") or ("7029145") or ("20050041422") or ("20080037262") or ("7086758") or ("20060043974") or ("5994845") or ("20110018436") or ("9380685") or ("6580182") or ("20160143097") or ("20130214685") or ("8517583") or ("20140361697") or ("9516716") or ("9247597") or ("6762563") or ("7597456") or ("20180343718") or ("20030209997") or ("20090309501") or ("7946730") or ("20070063706") or ("20170150560") or ("20170188426") or ("7432717") or ("4727449") or ("20060055250") or ("6323597") or ("20110068702") or ("20100289415") or ("7296913") or ("20060012997") or ("20080024070") or ("8823290") or ("20050041423") or ("20170215246") or ("20140217926") or ("9986617") or					

		("7250730") or ("5777868") or ("20070164683") or ("7391161") or ("20100207533") or ("20070075646") or ("8044599") or ("20110089852") or ("20090295300") or ("20150233566") or ("20080129213") or ("7166968") or ("20110068701") or ("7777430") or ("20100320499") or ("20120049742") or ("10264637") or ("7732942") or ("20080130288") or ("8016440") or ("20090021185") or ("9295117") or ("8669709") or ("20140036505") or ("9049768") or ("20170202061") or ("7847486") or ("9420644") or ("20170303353") or ("20040246640") or ("8400081") or ("20090261706") or ("20140049189") or ("20180116030") or ("7042116") or ("20080157688") or ("9622316") or ("7976191") or ("9999109") or ("20100148673") or ("8587205") or ("6765313")).PN. or (("20030117022") or ("20020101118") or ("20050225979") or ("20030117021") or ("20020047594") or ("7114830") or ("9253849") or ("9338853") or ("6734678") or ("20160081147") or ("9380657") or ("6710602") or ("20030102869") or ("20140361695") or ("20100045186") or ("20070029937") or					

		("20140168986") or ("6860628") or ("7342327") or ("20020135376") or ("20040012959") or ("4675575") or ("9661703") or ("9429280") or ("20140312787") or ("8632215") or ("20110260647") or ("20130169159") or ("9237619") or ("9341359") or ("5655830")).PN.					
L36	136	(("20080211415") or ("20080018260") or ("5495147") or ("7963670") or ("20050122723") or ("20050174065") or ("20020043943") or ("20080164821") or ("20060082223") or ("20080252220") or ("20050110427") or ("20080129214") or ("20090129077") or ("20040130331") or ("20030198048") or ("20050041422") or ("20080037262") or ("6580182") or ("20130214685") or ("6762563") or ("7597456") or ("4727449") or ("6323597") or ("20050041423") or ("7250730") or ("7391161") or ("20080129213") or ("8016440") or ("20090021185") or ("20080157688") or ("20050225979") or ("20100045186") or ("20140168986") or ("4675575") or ("5655830") or ("5886423") or ("20150241044") or ("7508141") or ("20050057187") or ("7276858") or ("4651061") or ("20070228999") or ("20050168156") or	(US-PGPUB; USPAT; USOCR)	OR	ON	ON	2019/05/02 08:29 AM

		("7679292") or ("20070195527") or ("6900093") or ("20080094837") or ("20020021573") or ("20030011538") or ("7364322") or ("6211626") or ("6528954") or ("20140152185") or ("5343122") or ("20070076426") or ("5957564") or ("20060022611") or ("20030080697") or ("6072280") or ("20030067302") or ("20030076051") or ("4358717") or ("20050170629") or ("7053560") or ("20060103320") or ("20040155609") or ("4870325") or ("6518707") or ("5015918") or ("6292901") or ("8085163") or ("7481570") or ("6830358") or ("20080183081") or ("20050179400") or ("5008595") or ("7276911") or ("6786625") or ("20070018594") or ("20040062041") or ("7453217") or ("4792729") or ("7344275") or ("20040046510") or ("20020101362") or ("6388393") or ("20060193131") or ("20120120649") or ("20100237790") or ("6599000") or ("7946731") or ("5646486") or ("20080094832") or ("8004203") or ("7642501") or ("7661852") or ("20030076281") or ("7436675") or ("6086220") or ("7598686") or ("5663719") or					

		("6158882") or ("7180250") or ("7067992") or ("6400098") or ("20140218914") or ("9497821") or ("6577080") or ("6166496") or ("6700333") or ("5012157") or ("7323849") or ("20030072145") or ("5345149") or ("20060145636") or ("5686799") or ("20100172127") or ("20060221609") or ("5798619") or ("20070058365") or ("7390115") or ("5894200") or ("20140183946") or ("7274302") or ("20140239832") or ("2924748") or ("5936599") or ("3443106") or ("4290057") or ("20100283391") or ("9706614") or ("6150771") or ("8704462") or ("7656103")).PN.					
L37	3	"10492282"	(US-PGPUB; USPAT)	OR	ON	ON	2021/02/27 02:54 PM

PE2E SEARCH - Search History (Interference)

There are no Interference searches to show.

UNITED STATES PATENT AND TRADEMARK OFFICE
COMMISSIONER FOR PATENTS
P.O.BOX 1450
ALEXANDRIA VA 22313-1451

PRESORTED
FIRST-CLASS MAIL
U.S. POSTAGE PAID
POSTEDIGITAL
NNNNN

HAMRE, SCHUMANN, MUELLER & LARSON, P.C.
45 South Seventh Street
Suite 2700
Minneapolis, MN 55402-1683

Courtesy Reminder for
Application Serial No: 16/693,552

Attorney Docket No: 40617.0493USC4
Customer Number: 52835
Date of Electronic Notification: 06/09/2021

This is a courtesy reminder that new correspondence is available for this application. If you have not done so already, please review the correspondence. The official date of notification of the outgoing correspondence will be indicated on the form PTOL-90 accompanying the correspondence.

An email notification regarding the correspondence was sent to the following email address(es) associated with your customer number:
PTOMail@hsml.com

To view your correspondence online or update your email addresses, please visit us anytime at **https://ppair-my.uspto.gov/pair/PrivatePair.**
If you have any questions, please email the Electronic Business Center (EBC) at EBC@uspto.gov or call 1-866-217-9197.

PART B - FEE(S) TRANSMITTAL

Complete and send this form, together with applicable fee(s), by mail or fax, or via EFS-Web.

By mail, send to: Mail Stop ISSUE FEE
Commissioner for Patents
P.O. Box 1450
Alexandria, Virginia 22313-1450

By fax, send to: (571)-273-2885

INSTRUCTIONS: This form should be used for transmitting the ISSUE FEE and PUBLICATION FEE (if required). Blocks 1 through 5 should be completed where appropriate. All further correspondence including the Patent, advance orders and notification of maintenance fees will be mailed to the current correspondence address as indicated unless corrected below or directed otherwise in Block 1, by (a) specifying a new correspondence address; and/or (b) indicating a separate "FEE ADDRESS" for maintenance fee notifications.

CURRENT CORRESPONDENCE ADDRESS (Note: Use Block 1 for any change of address)

52835 7590 06/09/2021
HAMRE, SCHUMANN, MUELLER & LARSON, P.C.
45 South Seventh Street
Suite 2700
Minneapolis, MN 55402-1683

Note: A certificate of mailing can only be used for domestic mailings of the Fee(s) Transmittal. This certificate cannot be used for any other accompanying papers. Each additional paper, such as an assignment or formal drawing, must have its own certificate of mailing or transmission.

Certificate of Mailing or Transmission

I hereby certify that this Fee(s) Transmittal is being deposited with the United States Postal Service with sufficient postage for first class mail in an envelope addressed to the Mail Stop ISSUE FEE address above, or being transmitted to the USPTO via EFS-Web or by facsimile to (571) 273-2885, on the date below.

Yelena Kase (Typed or printed name)
/Yelena Kase/ (Signature)
July 8, 2021 (Date)

APPLICATION NO.	FILING DATE	FIRST NAMED INVENTOR	ATTORNEY DOCKET NO.	CONFIRMATION NO.
16/693,552	11/25/2019	Steven J. Altamura	40617.0493USC4	8833

TITLE OF INVENTION: RESISTIVE BYPASS FOR SERIES LIGHTING CIRCUIT

APPLN. TYPE	ENTITY STATUS	ISSUE FEE DUE	PUBLICATION FEE DUE	PREV. PAID ISSUE FEE	TOTAL FEE(S) DUE	DATE DUE
nonprovisional	SMALL	$600	$0.00	$0.00	$600	09/09/2021

EXAMINER	ART UNIT	CLASS-SUBCLASS
HINES, ANNE M	2879	445-027000

1. Change of correspondence address or indication of "Fee Address" (37 CFR 1.363).

❑ Change of correspondence address (or Change of Correspondence Address form PTO/SB/122) attached.

❑ "Fee Address" indication (or "Fee Address" Indication form PTO/SB/47; Rev 03-09 or more recent) attached. **Use of a Customer Number is required.**

2. For printing on the patent front page, list
(1) The names of up to 3 registered patent attorneys or agents OR, alternatively,
(2) The name of a single firm (having as a member a registered attorney or agent) and the names of up to 2 registered patent attorneys or agents. If no name is listed, no name will be printed.

1 Hamre, Schumann, Mueller & Larson, P.C.
2
3

3. ASSIGNEE NAME AND RESIDENCE DATA TO BE PRINTED ON THE PATENT (print or type)

PLEASE NOTE: Unless an assignee is identified below, no assignee data will appear on the patent. If an assignee is identified below, the document must have been previously recorded, or filed for recordation, as set forth in 37 CFR 3.11 and 37 CFR 3.81(a). Completion of this form is NOT a substitute for filing an assignment.

(A) NAME OF ASSIGNEE: **Seasonal Specialties, LLC**

(B) RESIDENCE: (CITY and STATE OR COUNTRY): **Eden Prairie, Minnesota**

Please check the appropriate assignee category or categories (will not be printed on the patent) : ❑ Individual **X** Corporation or other private group entity ❑ Government

4a. Fees submitted: **X** Issue Fee ❑ Publication Fee (if required) ❑ Advance Order - # of Copies _____

4b. Method of Payment: *(Please first reapply any previously paid fee shown above)*

X Electronic Payment via EFS-Web ❑ Enclosed check ❑ Non-electronic payment by credit card (Attach form PTO-2038)

X The Director is hereby authorized to charge the required fee(s), any deficiency, or credit any overpayment to Deposit Account No. 503478

5. **Change in Entity Status** (from status indicated above)

❑ Applicant certifying micro entity status. See 37 CFR 1.29

❑ Applicant asserting small entity status. See 37 CFR 1.27

❑ Applicant changing to regular undiscounted fee status.

NOTE: Absent a valid certification of Micro Entity Status (see forms PTO/SB/15A and 15B), issue fee payment in the micro entity amount will not be accepted at the risk of application abandonment.
NOTE: If the application was previously under micro entity status, checking this box will be taken to be a notification of loss of entitlement to micro entity status.
NOTE: Checking this box will be taken to be a notification of loss of entitlement to small or micro entity status, as applicable.

NOTE: This form must be signed in accordance with 37 CFR 1.31 and 1.33. See 37 CFR 1.4 for signature requirements and certifications.

Authorized Signature /Michael Lasky/ Date July 8, 2021

Typed or printed name Michael B. Lasky Registration No. 29,555

Electronic Acknowledgement Receipt

EFS ID:	43202325
Application Number:	16693552
International Application Number:	
Confirmation Number:	8833
Title of Invention:	RESISTIVE BYPASS FOR SERIES LIGHTING CIRCUIT
First Named Inventor/Applicant Name:	Steven J. Altamura
Customer Number:	52835
Filer:	Michael B. Lasky/Yelena Kase
Filer Authorized By:	Michael B. Lasky
Attorney Docket Number:	40617.0493USC4
Receipt Date:	08-JUL-2021
Filing Date:	25-NOV-2019
Time Stamp:	16:47:13
Application Type:	Utility under 35 USC 111(a)

Payment information:

Submitted with Payment	yes
Payment Type	CARD
Payment was successfully received in RAM	$600
RAM confirmation Number	E202178G47382177
Deposit Account	503478
Authorized User	Yelena Kase

The Director of the USPTO is hereby authorized to charge indicated fees and credit any overpayment as follows:

37 CFR 1.20 (Post Issuance fees)

File Listing:

Document Number	Document Description	File Name	File Size(Bytes)/ Message Digest	Multi Part /.zip	Pages (if appl.)
1	Issue Fee Payment (PTO-85B)	Issue_fee_0493USC4.pdf	3106695 5bb4bbff467efede9a75f10f5f2459514b01d869	no	1
Warnings:					
Information:					
2	Fee Worksheet (SB06)	fee-info.pdf	30419 34bcbf0ab791a159ba9d8d90191c1b9c2e30dff1	no	2
Warnings:					
Information:					
		Total Files Size (in bytes):	3137114		

This Acknowledgement Receipt evidences receipt on the noted date by the USPTO of the indicated documents, characterized by the applicant, and including page counts, where applicable. It serves as evidence of receipt similar to a Post Card, as described in MPEP 503.

New Applications Under 35 U.S.C. 111
If a new application is being filed and the application includes the necessary components for a filing date (see 37 CFR 1.53(b)-(d) and MPEP 506), a Filing Receipt (37 CFR 1.54) will be issued in due course and the date shown on this Acknowledgement Receipt will establish the filing date of the application.
National Stage of an International Application under 35 U.S.C. 371
If a timely submission to enter the national stage of an international application is compliant with the conditions of 35 U.S.C. 371 and other applicable requirements a Form PCT/DO/EO/903 indicating acceptance of the application as a national stage submission under 35 U.S.C. 371 will be issued in addition to the Filing Receipt, in due course.
New International Application Filed with the USPTO as a Receiving Office
If a new international application is being filed and the international application includes the necessary components for an international filing date (see PCT Article 11 and MPEP 1810), a Notification of the International Application Number and of the International Filing Date (Form PCT/RO/105) will be issued in due course, subject to prescriptions concerning national security, and the date shown on this Acknowledgement Receipt will establish the international filing date of the application.

Electronic Patent Application Fee Transmittal

Application Number:	16693552
Filing Date:	25-Nov-2019
Title of Invention:	RESISTIVE BYPASS FOR SERIES LIGHTING CIRCUIT
First Named Inventor/Applicant Name:	Steven J. Altamura
Filer:	Michael B. Lasky/Yelena Kase
Attorney Docket Number:	40617.0493USC4

Filed as Small Entity

Filing Fees for Utility under 35 USC 111(a)

Description	Fee Code	Quantity	Amount	Sub-Total in USD($)
Basic Filing:				
Pages:				
Claims:				
Miscellaneous-Filing:				
Petition:				
Patent-Appeals-and-Interference:				
Post-Allowance-and-Post-Issuance:				
UTILITY APPL ISSUE FEE	2501	1	600	600

Description	Fee Code	Quantity	Amount	Sub-Total in USD($)
Extension-of-Time:				
Miscellaneous:				
			Total in USD ($)	**600**

INFORMATION DISCLOSURE STATEMENT PTO Form 1449	Docket Number 40617.0493USC4	Serial Number TBD
	Applicant(s) Steven J. Altamura	
	Filing Date November 25, 2019	Group Art Unit TBD

U.S. PATENT DOCUMENTS

EXAMINER INITIALS	REF	DOCUMENT NUMBER	DATE	NAME	CLASS	SUB-CLASS	FILING DATE (IF APPROPRIATE)
		1024495	04/30/1912	Booth			
		1868689	07/26/1932	Brander			
		2072337	03/02/1937	Kamm			
		2760120	08/21/1956	Fisherman			
		3345482	10/03/1967	Shih-Woo Lou			
		3912966	10/14/1975	Harnden, Jr.			
		4727449	02/23/1988	Fleck			
		4985001	01/15/1991	Nagai			
		5453664	09/26/1995	Harris			
		5777868	07/07/1998	Gibboney, Jr.			
		5886423	03/23/1999	Gershen et al.			
		6084357	07/04/2000	Janning			
		6283797	09/04/2001	Wu			
		6323597	11/27/2001	Janning			
		6344716	02/05/2002	Gibboney, Jr.			
		6580182	06/17/2003	Janning			
		6597125	07/22/2003	Janning			
		6765313	07/20/2004	Janning			
		6929383	08/16/2005	Janning			
		7042116	05/09/2006	Janning			
		7166968	01/23/2007	Janning			
		7178961	02/20/2007	Janning			
		7261458	08/28/2007	Janning			
		2003/0117021	06/26/2003	Janning			
		2005/0174065	08/11/2005	Janning			
		2005/0205971	09/22/2005	Janning			
		1510847	04/18/1922	Holder			
		1865689	06/25/1929	Brander			
		2152228	05/05/1937	Waters			
		2760120	10/26/1955	Fisherman			
		7342327	03/11/2008	Janning			
		6690103	02/2004	Uke			
		6555948	04/2003	Noll			
		4464600	08/1984	Kosmatka et al.			
		4463278	07/1984	Kosmatka et al.			
		3942063	03/1976	Winter et al.			
		3868230	02/1975	Krukonis			
		3461921	08/1969	Ackerman			
		3260888	07/1966	Webb			
		2145911	02/1939	Anderson Waldemar et al.			
		4629943	12/1986	Ponce, Jr.			
		7851981	12/14/2010	Altamura			
		9900968	02/20/2018	Altamura			
		2018/0199419	~~0712/2018~~ 07/2018	Altamura			

Change(s) applied to document, /J.K.W./ 6/14/2021

Examiner: /ANNE M HINES/	Date Considered: 02/27/2021

ALL REFERENCES CONSIDERED EXCEPT WHERE LINED THROUGH. /A.M.H/

UNITED STATES PATENT AND TRADEMARK OFFICE

UNITED STATES DEPARTMENT OF COMMERCE
United States Patent and Trademark Office
Address: COMMISSIONER FOR PATENTS
P.O. Box 1450
Alexandria, Virginia 22313-1450
www.uspto.gov

APPLICATION NO.	ISSUE DATE	PATENT NO.	ATTORNEY DOCKET NO.	CONFIRMATION NO.
16/693,552	08/17/2021	11096252	40617.0493USC4	8833

52835 7590 07/28/2021

HAMRE, SCHUMANN, MUELLER & LARSON, P.C.
45 South Seventh Street
Suite 2700
Minneapolis, MN 55402-1683

ISSUE NOTIFICATION

The projected patent number and issue date are specified above.

Determination of Patent Term Adjustment under 35 U.S.C. 154 (b)
(application filed on or after May 29, 2000)

The Patent Term Adjustment is 38 day(s). Any patent to issue from the above-identified application will include an indication of the adjustment on the front page.

If a Continued Prosecution Application (CPA) was filed in the above-identified application, the filing date that determines Patent Term Adjustment is the filing date of the most recent CPA.

Applicant will be able to obtain more detailed information by accessing the Patent Application Information Retrieval (PAIR) WEB site (http://pair.uspto.gov).

Any questions regarding the Patent Term Extension or Adjustment determination should be directed to the Office of Patent Legal Administration at (571)-272-7702. Questions relating to issue and publication fee payments should be directed to the Application Assistance Unit (AAU) of the Office of Data Management (ODM) at (571)-272-4200.

APPLICANT(s) (Please see PAIR WEB site http://pair.uspto.gov for additional applicants):

Seasonal Specialties, LLC, Eden Prairie, MN;
Steven J. Altamura, Scarsdale, NY;

The United States represents the largest, most dynamic marketplace in the world and is an unparalleled location for business investment, innovation, and commercialization of new technologies. The USA offers tremendous resources and advantages for those who invest and manufacture goods here. Through SelectUSA, our nation works to encourage and facilitate business investment. To learn more about why the USA is the best country in the world to develop technology, manufacture products, and grow your business, visit SelectUSA.gov.