UNITED STATES PATENT AND TRADEMARK OFFICE

BEFORE THE PATENT TRIAL AND APPEAL BOARD

LedUp Manufacturing Group Ltd.,
Petitioner

versus

Seasonal Specialties, LLC,
Patent Owner

U.S. Patent No. 11,533,794
Filing Date: Aug. 12 , 2021
Issue Date: Dec. 20 , 2022
Title: Resistive Bypass for Series Lighting Circuit

Inter Partes Review No.: IPR2024-01259

Declaration of E. Fred Schubert, Ph.D.

Table of contents

Table of contents 2

I. .....Summary of Background and Qualifications 13

II. .....Compensation 17

III. .....Materials Reviewed 17

IV.....Relevant Legal Standards.....17

V. .....Identification of challenge 20

VI.....Summary of opinions.....20

VII. .....The ’794 patent 22

VII.A. .... Overview 22

VII.B. .... Inherent resistance of light sources, ohmic resistance of light sources, and operation of lighting strings 27

VII.C..... Level of Ordinary Skill in the Art 30

VII.D. .... Claim Construction Under 37 C.F.R. § 42.104(b)(3) 32

VII.E..... The Challenged Claims of the ’794 Patent 32

VIII.....Overview of the prior art 35

VIII.A. ... Overview of the Inoue prior art 35

VIII.B. ... Overview of the Holler prior art 37

VIII.C. ... Overview of the Smith prior art 39

VIII.D.... Overview of the Fisherman prior art 42

VIII.E. … Overview of the Callahan prior art 44

VIII.F..... Overview of the Yu prior art 45

IX. ..... Ground 1: Inoue anticipates Claim 1 47

IX.A. …[1pre] "A resistor bypass circuit for a lighting circuit comprising …" 47

IX.B. ..... [1a] "a plurality of serially connected LED light sources and a bypass resistor being connected in parallel with at least one of the respective light sources …" 49

IX.C. ..... [1b] "said bypass resistor being in circuit and conducting current at all times when current is flowing through the circuit regardless of whether the LED light sources are conducting current therethrough." 52

X. ..... Ground 2: Inoue in view of Holler obviates Claims 1, 10, and 15 ...55

X.A..... Motivation to combine Inoue with Holler 55

X.B.....[1pre] "A resistor bypass circuit for a lighting circuit comprising …" 57

X.C..... [1a] "a plurality of serially connected LED light sources and a bypass resistor being connected in parallel with at least one of the respective light sources …" 58

X.D. ..... [1b] "said bypass resistor being in circuit and conducting current at all times when current is flowing through the circuit regardless of whether the LED light sources are conducting current therethrough." 59

X.E. .....[10pre] “A resistor bypass circuit for a lighting circuit comprising … .....” 60

X.F. .....[10a] “a plurality of serially connected LED light sources and a bypass resistor being connected in parallel with at least one of the respective light sources …” 61

X.G. .....[10b] “said bypass resistor connected across the at least one light sources and being in circuit and conducting current at all times when current is flowing through the circuit regardless of whether the LED light sources are conducting current therethrouh …” 61

X.H. .....[10c] “wherein the resistance of the bypass resistor is equal to or greater than the inherent resistance of the light source to which the resistor is attached.” 62

X.I. .....[15pre] “A method of bypassing an LED light source, having a predetermined resistance to current flow, in a serially connected LED light string having at least one light source, the method comprising the steps of …” 63

X.J. .....[15a] “the steps of selecting a bypass resistor with the following characteristics: a resistance greater than or equal to the predetermined resistance of said LED light source; the ability to carry all of the current in the light string; and the ability to operate at 100% duty cycle …” 64

X.K. .....[15b] “inserting said bypass resistor in parallel with said at least one LED light source.” 67

XI. .....Ground 3: Holler in view of Smith obviates Claims 1, 10, and 11 and 15 68

XI.A. ..... Motivation to combine Holler with Smith 68

XI.B. ..... [1pre] "A resistor bypass circuit for a lighting circuit comprising …" 70

XI.C. ..... [1a] "a plurality of serially connected LED light sources and a bypass resistor being connected in parallel with at least one of the respective light sources …" 72

XI.D. ..... [1b] "said bypass resistor being in circuit and conducting current at all times across the light sources when current is flowing through the circuit regardless of whether the LED light sources are conducting current therethrough." 74

XI.E. ..... [10pre] "A resistor bypass circuit for a lighting circuit comprising …" 76

XI.F. ..... [10a] "a plurality of serially connected LED light sources and a bypass resistor being connected in parallel with at least one of the respective light sources …" 77

XI.G. ..... [10b] "said bypass resistor connected across the at least one light sources and being in circuit and conducting current at all times when current is flowing through the circuit regardless of whether the LED light sources are conducting current therethrouh …" 77

XI.H. ..... [10c] "wherein the resistance of the bypass resistor is equal to or greater than the inherent resistance of the light source to which the resistor is attached." 78

XI.I. ..... [11] "The resistor bypass circuit of claim 10, the light source being a semiconductor light source for providing color changing characteristics." 82

XI.J. ..... [15pre] "A method of bypassing an LED light source, having a predetermined resistance to current flow, in a serially connected LED light string having at least one light source, the method comprising …" 83

XI.K. ..... [15a] "the steps of selecting a bypass resistor with the following characteristics: a resistance greater than or equal to the predetermined resistance of said LED light source; the ability to carry all of the current in the light string; and the ability o operate at 100% duty cycle …" 84

XI.L. ..... [15b] "inserting said bypass resistor in parallel with said at least one LED light source." 87

XII. .....Ground 4: Fisherman in view of Callahan obviates Claims 1, 2, 4, 8, 10 and 15 ... .88

XII.A..... Motivation to combine Fisherman and Callahan 88

XII.B..... [1pre] "A resistor bypass circuit for a lighting circuit comprising …" 89

XII.C..... [1a] "a plurality of serially connected LED light sources and a bypass resistor being connected in parallel with at least one of the respective light sources …" 90

XII.D. .... [1b] "said bypass resistor being in circuit and conducting current at all times across the light sources when current is flowing through the circuit regardless of whether the LED light sources are conducting current therethrough." 92

XII.E. ..... [2] "The resistor bypass circuit of claim 1, where the circuit is series-parallel connected." 94

XII.F. ..... [4] "The resistor bypass circuit of claim 1, wherein the LED light source uses 0.20 watts or less." 95

XII.G. .... [8] "The resistor bypass circuit of claim 1 being utilized in AC or DC circuits powered form a power source selected from the list consisting of batteries, step down transformers, AC utility power, or converters from AC to DC or DC to AC power, pulsed DC and filtered or unfiltered DC, or partially filtered AC." 96

XII.H. .... [10pre] "A resistor bypass circuit for a lighting circuit comprising …" 97

XII.I. ..... [10a] "a plurality of serially connected LED light sources and a bypass resistor being connected in parallel with at least one of the respective light sources …" 97

XII.J. ..... [10b] "said bypass resistor connected across the at least one light sources and being in circuit and conducting current at all times when current is flowing through the circuit regardless of whether the LED light sources are conducting current therethrouh …" 98

XII.K. ..... [10c] "wherein the resistance of the bypass resistor is equal to or greater than the inherent resistance of the light source to which the resistor is attached." 98

XII.L. ..... [15pre] "A method of bypassing an LED light source, having a predetermined resistance to current flow, in a serially connected LED light string having at least one light source, the method comprising …" 100

XII.M.…[15a] "the steps of selecting a bypass resistor with the following characteristics: a resistance greater than or equal to the predetermined resistance of said LED light source; the ability to carry all of the current in the light string; and the ability o operate at 100% duty cycle …"..... 100

XII.N.….[15b] "inserting said bypass resistor in parallel with said at least one LED light source." 102

XIII.…..Ground 5: Inoue in view of Smith obviates Claims 2, 3, 4, 5, 6, 8 and 9..... 103

XIII.A.…Motivation to combine Inoue with Smith..... 103

XIII.B.…[2] "The resistor bypass circuit of claim 1, where the circuit is series-parallel connected."..... 105

XIII.C.…[3] "The resistor bypass circuit of claim 1 wherein at least one of the light sources is a semiconductor providing a twinkling effect, and wherein the semiconductor light source utilizes electronic circuits that control the flashing rate of the light souce." 106

XIII.D.…[4] "The resistor bypass circuit of claim 1, wherein the LED light source uses 0.20 watts or less." 107

XIII.E.….[5] "The resistor bypass circuit of claim 1, at least one of the light sources is a semiconductor light source providing a twinkling effect." 109

XIII.F.….[6] "The resistor bypass circuit of claim 1, at least one of the light sources is a semiconductor light source utilizing electronic circuits that control the flashing rate of the light source, which would only affect the individual lighting element as th resistive bypass would allow current to continue to flow in remaining lighting elements in the series circuit."..... 110

XIII.G.…[8] "The resistor bypass circuit of claim 1 being utilized in AC or DC circuits powered form a power source selected from the list consisting of batteries, step down transformers, AC utility power, or converters from AC to DC or DC to AC power, pulsed DC, and filtered or unfiltered DC, or partially filtered AC." 112

XIII.H.…[9pre] "A resistor bypass circuit for a series lighting circuit comprising …" 113

XIII.I.…..[9a] "a plurality of serially connected LED light sources and a bypass resistor being connected in parallel with at least one of the respective light sources …" 113

XIII.J.…..[9b] "said bypass resistor being in circuit and conducting current at all times when current is flowing through the circuit regardless of whether the LED light sources are conducting current therethrough …"..... 114

XIII.K.…[9c] "further including an LED flashing light source which includes a flashing circuit which causes the entire light circuit to flash." ... 114

XIV.…..Ground 6: Holler in view of Callahan obviates Claims 11, 12, 13 and 14..... 115

XIV.A.…Motivation to combine Holler with Callahan..... 115

XIV.B.…[11] "The resistor bypass circuit of claim 10, the light source being a semiconductor light source for providing color changing characteristics." 116

XIV.C.…[12] "The resistor bypass circuit of claim 10, the semiconductor light source utilizing LED packages that incorporate two or more LED chips,

and an integrated circuit (IC), the integrated circuit controlling each LED chip in respective LED packages indepndently." 118

XIV.D.[13] "The resistor bypass circuit of claim 12, the IC controlling the current and/or voltage to the individual LED chips in the LED package, the control providing for the mixing of the LED chip colors to get various resultant colors." 119

XIV.E. … [14] "The resistor bypass circuit of claim 13, the control only affecting individual lighting element, the bypass resistor providing for current continuing to flow in remaining lighting elements in the series circuit." 120

XV.Ground 7: Yu anticipates and/or obviates Claims 1, 2, 10 and 15 122

XV.A.[1pre] "A resistor bypass circuit for a lighting circuit comprising …" 122

XV.B. …. [1a] "a plurality of serially connected LED light sources and a bypass resistor being connected in parallel with at least one of the respective light sources …" 122

XV.C. …. [1b] "said bypass resistor being in circuit and conducting current at all times across the light sources when current is flowing through the circuit regardless of whether the LED light sources are conducting current therethrough." 123

XV.D. …. [2] "The resistor bypass circuit of claim 1, where the circuit is series-parallel connected." 125

XV.E. ….. [10pre] "A resistor bypass circuit for a lighting circuit comprising …" 127

XV.F.…..[10a] “a plurality of serially connected LED light sources and a bypass resistor being connected in parallel with at least one of the respective light sources …” 127

XV.G.….[10b] “said bypass resistor connected across the at least one light sources and being in circuit and conducting current at all times when current is flowing through the circuit regardless of whether the LED light sources are conducting current therethrouh …” 127

XV.H.….[10c] “wherein the resistance of the bypass resistor is equal to or greater than the inherent resistance of the light source to which the resistor is attached.” 128

XV.I.……[15pre] “A method of bypassing an LED light source, having a predetermined resistance to current flow, in a serially connected LED light string having at least one light source, the method comprising the steps of …” 131

XV.J.……[15a] “the steps of selecting a bypass resistor with the following characteristics: a resistance greater than or equal to the predetermined resistance of said LED light source; the ability to carry all of the current in the light string; and the ability o operate at 100% duty cycle …”..... 132

XV.K.……[15b] “inserting said bypass resistor in parallel with said at least one LED light source.” 134

XVI……Secondary considerations.....135

XVII.…Right to supplement 135

XVIII…Conclusion 136

List of documents relied upon

Shorthand	Description
’794 patent	U.S. Patent No. 11,533,794
’794 file history	Prosecution File History of U.S. Patent No. 11,533,794
Inoue	U.S. Patent Application Publication No. 2005 / 0168162
Holler	U.S. Patent No. 1,510,847
Smith	U.S. Patent No. 4,675,575
Fisherman	U.S. Patent No. 2,760,120
Callahan	U.S. Patent No. 7,015,825
Yu	U.S. Patent Application Publication No. 2008 / 0025024
Craford	M. G. Craford “LEDs challenge the incandescents” *IEEE Circuits and Devices Magazine*, Vol. 8.5, pages 24-29, 1992.
Schubert	E. F. Schubert “Light Emitting Diodes,” 2nd edition, Cambridge University Press, Cambridge UK, 2006.

I, E. Fred Schubert declare as follows:

I. Summary of Background and Qualifications

1. This section contains a summary of my educational background, career history, publications, and other relevant qualifications. My full curriculum vitae is attached as Appendix B to this declaration.

2. I am currently an active tenured full Professor in the Department for Electrical, Computer, and Systems Engineering at the Rensselaer Polytechnic Institute (RPI) located in Troy, New York. My major faculty activities include teaching, research, intramural and extramural service, and consulting.

3. I received a Bachelor's Degree in Electrical Engineering from the University of Stuttgart, Germany, in 1978. I received a Master's Degree in Electrical Engineering from the University of Stuttgart in 1981. In 1981, subsequent to receiving the Master's Degree, I joined the Max Planck Institute for Solid-State Research, located in Stuttgart, as a Member of the Scientific Staff. I worked in this position until 1985. I submitted my dissertation to the University of Stuttgart in 1985 and received a Ph.D. degree in Electrical Engineering from the University of Stuttgart, in 1986.

4. In 1985, subsequent to my tenure at the Max Planck Institute for Solid-State Research, I joined industry, AT&T Bell Laboratories, in Holmdel and Murray Hill, New Jersey, initially as a post-doctoral member of the technical staff. About two years later, in 1988, I became a Member of Technical Staff, Principal Investigator, and Member of Management. I worked at AT&T Bell Laboratories for a total of 10 years, until 1995.

5. In 1995, I joined academia. My first position was at Boston University (Boston, MA), where I worked as a full professor for seven years. At Boston

University, I directed the Semiconductor Devices Research Laboratory and co-directed the Silicon Integrated Circuit Processing Facility.

6. In 2002, I joined Rensselaer Polytechnic Institute (RPI) as a distinguished professor, the Future Chips Constellation Professor with appointments in the Department for Electrical, Computer, and Systems Engineering and the Department for Physics, Applied Physics and Astronomy. During my tenure at RPI, I held various leadership positions, including Head of the Future Chips Constellation and Director of the Smart Lighting Engineering Research Center (Smart Lighting ERC) that was funded by the U.S. National Science Foundation at a volume of $40 million for over 10 years.

7. I am named as inventor or co-inventor of 39 U.S. patents and have co-authored more than 300 publications. I authored the books "Doping in III–V Semiconductors" (1993), "Delta Doping of Semiconductors" (1996), "Physical Foundations of Solid-State Devices" (2015 and 2022) and the first, second, third, and fourth editions of "Light-Emitting Diodes" (2003, 2006, 2018, and 2023); the latter book is known as a standard textbook in the field of LEDs, and the book has been translated into Russian, Japanese and Korean. My publications have been well recognized by the technical community as illustrated by the more than 40,000 citations that my publications have received.

8. I have received several awards for my technical contributions. They include: Senior Member IEEE (1993); Literature Prize of the VDE for my book "Doping in III–V Semiconductors" (1994); Fellow SPIE (1999); Alexander von Humboldt Senior Research Award (1999); Fellow IEEE (1999); Fellow OSA (2000); Boston University Provost Innovation Award (2000); Discover Magazine Award for Technological Innovation (2000); R&D 100 Award for RCLED (2001); Fellow APS (2001); RPI Trustees Award for Faculty Achievement (2002 and 2008); Honorary Membership

in Eta Kappa Nu (2004); 25 Most Innovative Micro- and Nano-Products of the Year Award of R&D Magazine (2007); and Scientific American 50 Award (2007).

9. My general expertise is in the field of electrical engineering and applied physics, including semiconductors, electronics, photonics, and lighting systems.

10. My specific expertise is in the field of light-emitting diodes (LEDs) and LED lighting systems, including the structure, packaging, and manufacture of LEDs. My work has included the design, growth, fabrication, manufacturing, and testing of semiconductor devices, as well as the employment of these devices in a variety of LED lighting applications, including "smart" lighting applications.

11. I have been working in the field of semiconductor microelectronic and optoelectronic devices, including light-emitting diodes (LEDs), for more than 25 years. I have conducted and directed research in this field, have conducted and directed development in this field, and have published numerous papers, patents, and books on LEDs. My research and development activities have related to the design, fabrication, packaging, reliability, life-testing, heat-flow, and encapsulation of LEDs. Specific LED-related research topics, on which I have worked and published, include the following:

- Smart lighting systems with controllable intensity, color temperature and emission pattern;
- Drivers, controllers, and power supplies for LED lighting systems;
- Communication with LED lighting systems (LiFi technology)
- The roughening, texturing, and patterning of surfaces in GaN LEDs in order to enhance light extraction;
- The encapsulation of LED chips using a transparent resin, such as silicone, and the control of its refractive index by inclusion of titania nanoparticles;
- The heat flow and thermal management in LED packages;

- The reliability of LED packages, including lifetime testing under (i) elevated temperatures, (ii) enhanced humidity and (iii) over-current conditions;
- The design, fabrication and testing of LED packages with particular attention to the spatial phosphor distribution and thermal management; and
- GaN thin-film LEDs that employ laser-lift-off (LLO) to transfer the LED semiconductor layers from the growth substrate to a substitute substrate.

12. I have made pioneering contributions to the following technical fields: delta-doping, resonant cavity light-emitting diodes, high electron mobility transistors, photonic-crystal light-emitting diodes, crystallographic etching of GaN, ohmic contacts (such as delta-doped ohmic contacts and non-alloyed ohmic contacts), omnidirectional reflectors, low-refractive index and low-k materials, high refractive index and high-k materials, silicon integrated circuit technology, anti-reflection coatings, light-emitting diodes, LEDs with remote phosphors, the efficiency droop in LEDs, and solid-state lighting.

13. I have written four editions of a textbook on LEDs, with the 1st, 2nd, 3rd, and 4th edition published in 2003, 2006, 2018, and 2023, respectively. The books are among the most comprehensive discussions of LEDs and associated lighting technologies found in the technical literature.

14. At my home institution, RPI, I have repeatedly taught a course on LEDs, which includes extensive discussions on the efficiency of LEDs. I have guided graduate students and post-doctoral researchers conducting research on LEDs including the packaging of LEDs. My work in industry (at AT&T Bell Laboratories) involved LEDs

and lasers, including topics such as minimizing the cost of device-packaging processes.

15. As Director and Principal Investigator of the Smart Lighting Engineering Research Center, funded by the US National Science Foundation, I have directed research on LEDs for use in intelligent or "smart" lighting systems. Such smart lighting systems have functionalities that go beyond lighting and include, for example, the tuning of the color temperature, as well as communication with lighting sources.

II. Compensation

1. For my efforts in connection with the preparation of this declaration, I have been compensated at my standard rate for this type of consulting activity. My compensation is in no way contingent on the results of these or any other proceedings relating to the above-captioned patent.

III. Materials Reviewed

1. In preparing this declaration, I have reviewed and considered at least the documents cited in the List of Petitioner's Exhibits above, and the documents referenced in this declaration.

IV. Relevant Legal Standards

1. I am not an attorney. For the purposes of this declaration, I have been informed about certain aspects of the law that are relevant to forming my opinions. My understanding of the law is as follows.

2. Petitioner's counsel has informed me that a patent claim may be "anticipated" if each element of that claim is present either explicitly or inherently

in a single prior art reference, and that the elements should be arranged in the reference as in the claim. Petitioner's counsel has informed me that for a claimed limitation to be inherently present, the prior art reference need not expressly disclose the limitation, so long as the claimed limitation necessarily flows from a disclosure in the reference.

3. Petitioner's counsel has informed me that a patent claim can be considered to have been obvious to a person of ordinary skill in the art at the time of the claimed invention. This means that, even if not all the requirements of a claim are found in a single prior art reference, the claim is not patentable if the differences between the prior art and the subject matter in the claim would have been obvious to a person of ordinary skill in the art at the time of the claimed invention.

4. Petitioner's counsel has informed me that a determination of whether a claim would have been obvious should be based upon several factors, including, among others: (i) the level of ordinary skill in the art at the time of the claimed invention; (ii) the scope and content of the prior art; (iii) what differences, if any, existed between the subject matter of the claimed invention and the prior art; and (iv) secondary considerations of non-obviousness.

5. Petitioner's counsel has informed me that secondary or objective evidence of non-obviousness includes evidence of: (1) a long felt but unmet need in the prior art that was satisfied by the claimed invention; (2) commercial success of the claimed invention; (3) unexpected results achieved by the claimed invention; (4) praise of the claimed invention by others skilled in the art; (5) taking of licenses under the patent by others; (6) deliberate copying of the claimed invention; and (7) contemporaneous and independent invention by others. However, Petitioner's counsel has also informed me that there must be a relationship between any secondary evidence of non-obviousness and the claimed invention.

6. Petitioner's counsel has informed me that a single reference can render a patent claim obvious if any differences between that reference and the claims would have been obvious to a person of ordinary skill in the art. Alternatively, the teachings of two or more references may be combined in the same way as disclosed in the claims, if such a combination would have been obvious to one having ordinary skill in the art. In determining whether a combination based on either a single reference or multiple references would have been obvious, it is appropriate to consider, among other factors:

a. whether the teachings of the prior art references disclose known concepts combined in familiar ways, and when combined, would yield predictable results;

b. whether a person of ordinary skill in the art could implement a predictable variation, and would see the benefit of doing so;

c. whether the claimed elements represent one of a limited number of known design choices, and would have a reasonable expectation of success by those skilled in the art;

d. whether a person of ordinary skill would have recognized a reason to combine known elements in the manner described in the claim;

e. whether there is some teaching or suggestion in the prior art to make the modification or combination of elements claimed in the patent; and/or

f. whether the innovation applies a known technique that had been used to improve a similar device or method in a similar way.

7. Petitioner's counsel has informed me that in considering obviousness, I should keep in mind that a person of ordinary skill in the art has ordinary creativity and is not an automaton.

8. Petitioner's counsel has also informed me that in considering obviousness, it is improper to determine obviousness using the benefit of hindsight derived from the patent being considered.

V. Identification of challenge

1. The table below identifies the Grounds that I have considered.

Ground	Basis	Reference	Claims
1	Anticipation	Inoue	1
2	Obviousness	Inoue in view of Holler	1, 10 and 15
3	Obviousness	Holler in view of Smith	1,10, 11 and 15
4	Obviousness	Fisherman in view of Callahan	1, 2, 4, 8, 10 and 15
5	Obviousness	Inoue in view of Smith	2, 3, 4, 5, 6, 8 and 9
6	Obviousness	Holler in view of Callahan	11, 12, 13 and 14
7	Obviousness	Yu	1, 2, 10 and 15

Table caption: Asserted Grounds of invalidity and the associated claims of the ’794 patent.

VI. Summary of opinions

1. Based on my review of U.S. Patent No. 11,533,794 (Exhibit 1001, the “’794 patent”) and its prosecution history (Exhibit 1002), the other materials I have considered, and my knowledge and experience,[1] my opinions are as follows:

[1] Although I consider myself an expert in the field of electrical engineering, I am speaking for a POSA. On multiple occasions during my tenure in industry and academia, I have worked with students, post-graduate students, and engineers in industry, whose level of skills matches the level of skills of a POSA. Based on my experience, I am familiar with the capabilities and creativity of a POSA. For example, a POSA would be familiar with basic concepts of electrical

a. Claim 1 of the ’794 patent is anticipated and/or would have been obvious to a POSA in 2006 based on the Inoue prior art, as discussed in Ground 1.
b. Claims 1, 10 and 15 of the ’794 patent would have been obvious to a POSA in 2006 based on the Inoue-in-view-of-Holler prior art, as discussed in Ground 2.
c. Claims 1,10, 11 and 15 of the ’794 patent would have been obvious to a POSA in 2006 based on the Holler-in-view-of-Smith prior art, as discussed in Ground 3.
d. Claims 1, 2, 4, 8, 10 and 15 of the ’794 patent would have been obvious to a POSA in 2006 based on the Fisherman-in-view-of-Callahan prior art, as discussed in Ground 4.
e. Claims 2, 3, 4, 5, 6, 8 and 9 of the ’794 patent would have been obvious to a POSA in 2006 based on the Inoue-in-view-of-Smith prior art, as discussed in Ground 5.
f. Claims 11, 12, 13 and 14 of the ’794 patent would have been obvious to a POSA in 2006 based on the Holler-in-view-of-Callahan prior art, as discussed in Ground 6.
g. Claims 1, 2, 10 and 15 of the ’794 patent would have been obvious to a POSA in 2006 based on the Yu prior art, as discussed in Ground 7.

---

engineering, such as series and parallel circuits, and the equations that govern these basic circuits, such as Ohm’s law, as well as parallel resistor and series resistor circuit equations.

VII. The ’794 patent

VII.A. Overview

1. The ’794 patent (US Patent No. 11,533,794), titled “**Resistive bypass for series lighting circuit**,” was filed on Aug. 12 , 2021, and claims priority to the US provisional application No. 60 / 876,868, filed on Dec. 22, 2006. For purposes of this opinion, I have been advised that the relevant prior art references (which I rely on) qualify as prior art to the ’794 patent.

2. The ’794 patent generally discloses a “**plurality of serially connected light sources**” (’794, Abstract) that may be referred to as “**light strings**.” or “**lighting strings**.” (’794, 1:26-29) The ’794 patent discloses: “**Series connected circuits containing lighting sources are well known especially in lighting strings and flexible lighting (Rope Lights) around the holidays when such light strings are used for decorative purposes.**” (’794, 1:26-29) “**Generally, the lights in these lighting circuits are electrically in series rather than in parallel**.” (’794, 1:32-34)

3. Lighting strings include a number of miniature lamps that include an electrically driven light source that can be miniature incandescent bulbs or light-emitting diodes (LEDs). In 2006, both types of light sources, LEDs and incandescent bulbs, were well known. Not surprisingly, the ’794 patent discloses both “**incandescent bulbs**” with a “**tungsten filament**” as well as “**semiconductor light sources, such as light emitting diodes (LEDs).**” (’794, 2:33, 5:41, 2:58-60) It was generally known that incandescent light sources consume more electricity than LED light sources.[2] Indeed, the transition from incandescent to LED light sources was

---

[2] A 1992 article titled “**LEDs challenge the incandescents**” by Craford discusses the greater efficiency of LEDs and states: “**The emergence of high-brightness red**

motivated by the lower energy consumption of LED light sources. The ’794 patent discloses that incandescent bulbs are indeed “**higher energy consuming bulbs**” whose electrical power may exceed 0.2 W (0.2 watt): “**the standard bulb having a power consumption of 0.35-0.425 watts.**” (’794, 2:36-37) The ’794 patent explains that the power consumption of incandescent bulbs can be reduced to 0.2 W by using high-purity tungsten filaments and a more tightly wound tungsten wire coil: “**In order to achieve substantially the same brightness as the standard bulb, the bulb of the present invention uses a higher purity tungsten filament, along with a tighter coil for the filament when rated 0.20 watts.**” (’794, 2:39-42) The power consumption of LEDs is generally lower than that of incandescent bulbs and typically falls below 0.2 W per LED, particularly for lighting strings whose purpose is to decorate rather than provide room lighting or general lighting. A typical miniature lamp of a lighting string is shown in the image below.

AlGaAs emitters opened new markets to visible LEDs. The recent introduction of AlInGaP yellow and orange devices, with their order-of-magnitude improvement in luminous performance are expected to further increase the growth rate and offer a viable alternative to incandescent (filament-based) lamps.” (1992-Craford, page 1)

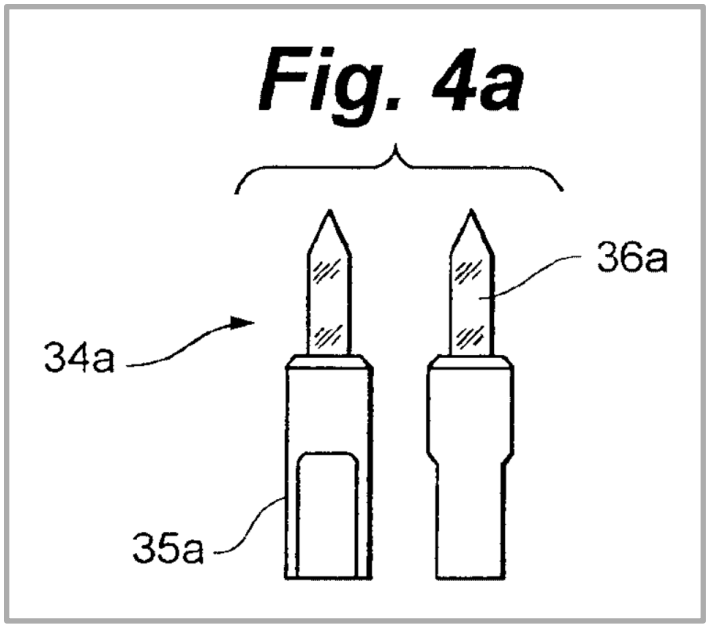

Figure caption: ’794 patent, Figure 4a.

4. Irrespective of the type of light source used for a lighting string (LEDs or incandescent bulbs), serially-connected lamps have the problem that when one of the light sources fails (burns out), the entire lighting string becomes unlit and dark. The ’794 patent explains: “**One particular drawback to these types of lighting circuits is that when a lighting source is removed from the circuit, is burnt out, defective, or has a loose connection, the entire lighting circuit is rendered inoperable**.” (’794, 1:34-37) Frequently, spare lamps are provided to enable a consumer to exchange a non-functioning lamp with a spare lamp.

5. In order to overcome the well-known problem of an entire lighting string going dark when a single lamp fails, the ’794 patent discloses that a resistor be connected in parallel to each light source. If the light source fails, so that its resistance is infinite (“open circuit”), the current can continue flowing through the resistor connected in parallel to the light source, thereby preventing the lighting string from going dark in its entirety. That is, the failure of one light source affects only the failed light source but not the entire light string. The ’794 patent discloses: “**one embodiment of a light circuit for a series lighting circuit of the present**

invention comprises lighting sources connected in series with each other, where each lighting source has a resistive bypass element connected in parallel across it." ('794, 3:31-35) The '794 patent further discloses:

> "**The embodiment of this device is to provide a low cost resistive bypass element for series connected light sources. The current movement towards low energy incandescent bulbs, LEDs, and other energy saving light sources allows for a simple resistor to be utilized without creating the heating issues previously faced if such a device was attempted. Now with these low power consuming lighting sources, a resistive bypass element becomes the forefront of products, providing a low-cost bypass circuit.**"
>
> ('794, 3:36-44)

> "**In another embodiment of the present invention, the resistive bypass element may be connected in parallel with more than one light source, where the failure of one bulb would then only affect a limited amount of light sources in the lighting circuit, further saving the cost of bypass resistive elements across each lighting source.**"
>
> ('794, 3:49-54)

6. Circuit diagrams for lighting strings, including the individual light sources and associated bypass resistors, are disclosed in the '794 patent by the images shown below:

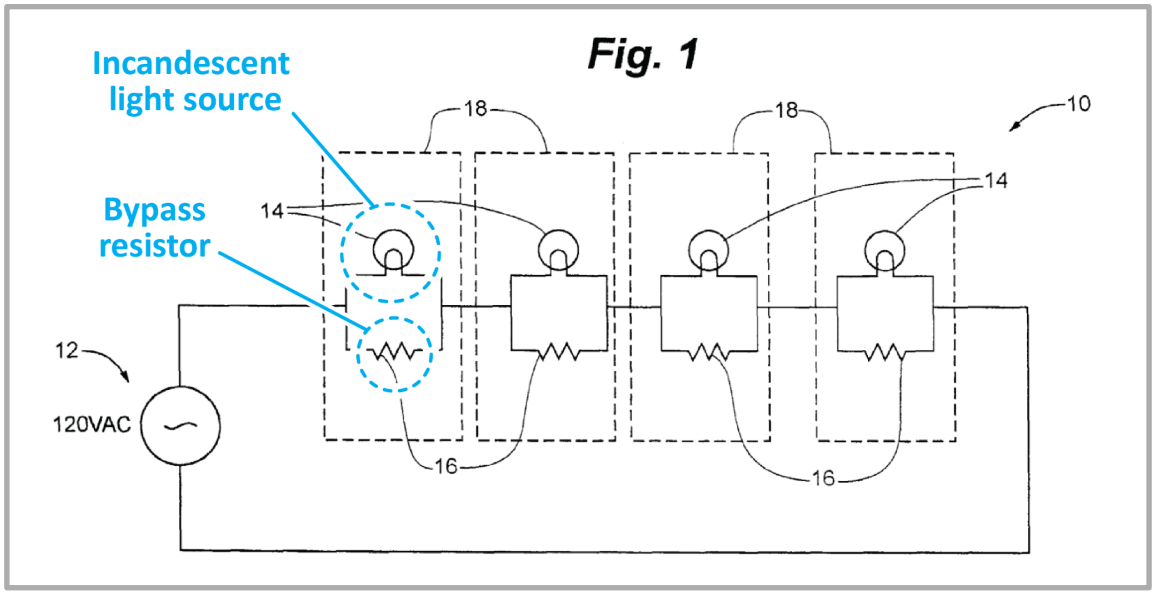

Figure caption: ’794 patent, Fig. 1 showing incandescent light sources 14 and bypass resistors 16 (annotated).

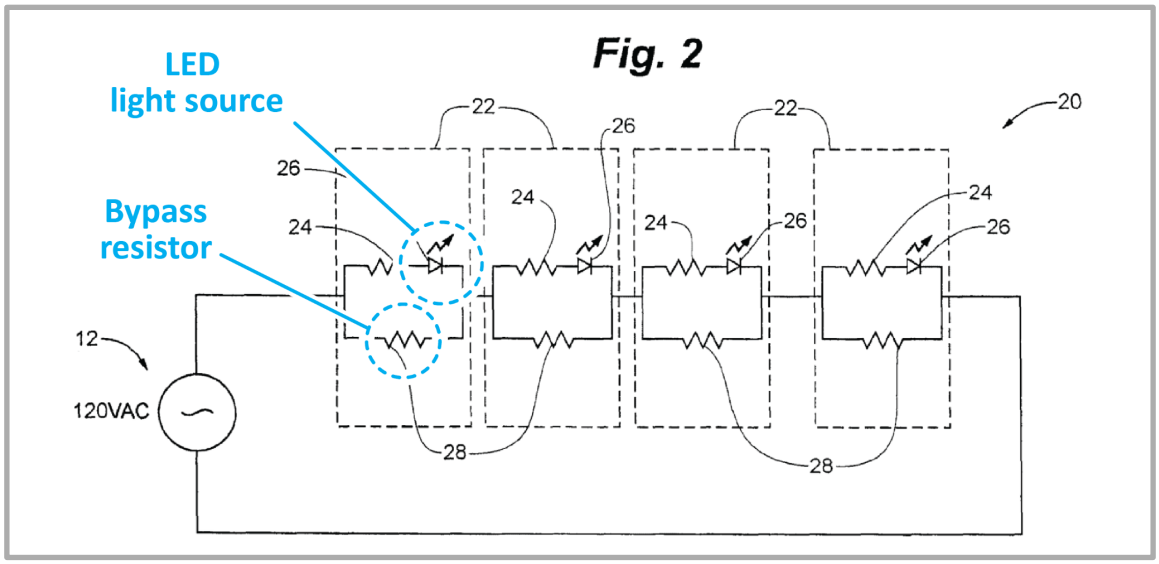

Figure caption: ’794 patent, Fig. 2 showing LED light sources 26 and bypass resistors 28 (annotated).

7. Because the light source (LED or incandescent bulb) is connected in parallel with the bypass resistor, the current will continue to flow when the light source fails (burns out), thereby keeping the lighting string functional (except for the light source that has failed).

VII.B. Inherent resistance of light sources, ohmic resistance of light sources, and operation of lighting strings

1. Claim 10 of the Altamura-'252 patent and Claim 10 of the Altamura-'794 patent use the phrase "**inherent resistance of the light source**" where the "**light source**" is understood to be an "**LED light source**."

2. I have worked in the field of LEDs for more than 25 years. I am not aware that there is an "**inherent resistance**" associated with an LED. Someone could serve as his or her own lexicographer and define "**inherent resistance**" in the context of LEDs, but this has not been done in the Altamura patents. That is, the Altamura patents do not provide a definition for the claim term "**inherent resistance**." I do not know what is meant by the claim term "**inherent resistance**." Similarly, a POSA would not know what is meant by "**inherent resistance**" in the context of LEDs.

3. The "**inherent resistance**" (see Claims 10 of the Altamura-'252 and '794 patents) is not a common term of art. Furthermore, the term "**inherent resistance**" is not explained in the Specification of the Altamura patents. A POSA would not understand the meaning of "**inherent resistance**."

4. An LED is a semiconductor diode that emits light when a forward current flows through the diode. The light intensity of the LED is proportional to the current. The voltage across the two terminals of an LED emitting visible light (such as blue, green, and white LEDs) most commonly is about 3.0 V.[3]

---

[3] LEDs emitting in the visible spectrum (including red, green, blue and white light) have a diode forward voltage ranging from 2.0 V to 3.5 V. Blue, green, and white LEDs have a diode forward voltage of about 3.0 V. Infrared (IR) LEDs typically have a diode forward voltage lower than 2.0 V, whereas ultraviolet (UV) LEDs typically

5. Ohm's law defines the ratio of voltage over current as resistance, that is:

$$R = V / I$$

where V is the diode voltage (about 3.0 V), I is the current flowing through the diode, and R is the diode ohmic resistance.

6. Because the resistance defined by the above equation is based on Ohm's law, the resistance may be referred to as "ohmic resistance." The ohmic resistance depends on the operating conditions of the LED, most significantly the LED current, but also on other parameters such as temperature.

7. As a first example, assume that an LED is injected with a current of 20 mA. Then the diode ohmic resistance is $R = V / I$ = 3.0 V / 20 mA = 150 Ω.

8. As a second example, assume that an LED is injected with a current of 50 mA. Then the diode ohmic resistance is $R = V / I$ = 3.0 V / 50 mA = 60 Ω.

9. The above examples show that the diode ohmic resistance depends on the operating conditions, most significantly the diode current. In addition, the ambient temperature and device temperature plays a role. That is, an LED's ohmic resistance will change when operating the LED in a cold environment (such as 0°C / 32°F) and a warm environment (such as 30°C / 86°F).

10. A POSA would be familiar with Ohm's law as well as the resistance defined by Ohm's law, including the ohmic resistance of a diode, such as an LED, as defined by the equation $R = V / I$.

---

have a diode forward voltage higher than 3.5 V. See, for example, Figure 4.3 of the book titled "Light Emitting Diodes" (2nd edition, by E.F. Schubert, published by Cambridge University Press in 2006), which shows diode forward voltages between 2.0 V and 3.5 V for virtually all LEDs emitting in the visible spectral range.

11. Consider an LED with an increasing voltage applied to it. Initially, when the voltage across the LED is near zero, the ohmic resistance of the LED is near infinite. As the voltage increases, the LED ohmic resistance gradually decreases from an initially very high value (such as near-infinite) to a smaller value (such as 100 Ω) in the normal operating regime (such as for an LED current of 30 mA).

12. Another resistance of an LED is its "**differential resistance**" or "**dynamic resistance**." The differential resistance is defined by:

$$R = \mathrm{d}V / \mathrm{d}I$$

where $\mathrm{d}V / \mathrm{d}I$ is the derivative of voltage with respect to current. The differential resistance is relevant when considering small signals.

13. To the extent that the Patent Owner contends that "inherent resistance" is the same as "ohmic resistance," I wish to point out that the ohmic resistance of an incandescent lamp increases with the operating current, whereas the ohmic resistance of an LED decreases with operating current. Nevertheless, the ohmic resistance of incandescent light sources is more constant than that of LED light sources.

14. I understand from counsel that "**effective resistance**" is another technical term of interest. The term "effective resistance" is not mentioned in the Altamura patents. Based on my understanding, there is no general agreement within the technical community as to what "effective resistance" means in the context of LEDs. At best, the term "effective resistance" would depend on context, and how a person using the term would define the term. Without proper explanation, I would not know what is meant by "effective resistance." Similarly, a POSA would not know what is meant by "effective resistance" in the context of LEDs.

15. Furthermore, I understand from counsel that "**non-ohmic resistance**" is yet another technical term of interest. The term "non-ohmic resistance" is not mentioned in the Altamura patents. Based on my understanding, there is no general agreement within the technical community as to what "non-ohmic resistance" means in the context of LEDs. At best, the term "non-ohmic resistance" would depend on context, and how a person using the term would define the term. Without proper explanation, I would not know what is meant by "non-ohmic resistance." Similarly, a POSA would not know what is meant by "non-ohmic resistance" in the context of LEDs.

16. When an LED blinks, flashes or twinkles, it has an ON state and an OFF state. In the OFF state, no current flows through the LED. If multiple LEDs are connected in a series circuit (without bypass resistors), and one LED fails (burns out) or switches from the ON state to the OFF state, then the entire string of LEDs becomes unlit. A POSITA would understand that if a string of regular LEDs with one twinkle chip LED had bypass resistors, removal of the bypass resistor for the twinkle chip LED would result in the whole string, including all non-twinkle LEDs blinking, flashing or twinkling.

17. If a series lighting string has one or a few twinkle lights, yet not all lights are twinkle lights, the presence of a bypass resistor allows the non-twinkle lights to be ON, and not affected by the interruption of current caused by the twinkling.

VII.C. Level of Ordinary Skill in the Art

1. I have been informed and understand that prior art references can provide evidence of the level of ordinary skill in the art, and that factors that may be considered in determining this level of skill can include the educational level of the inventors and active workers in the field, the types of problems encountered in the

art, the prior art solutions to those problems, the rapidity with which innovations are made, and the sophistication of the technology.

2. The relevant time for a person of ordinary skill in the art ("POSA") is December 22, 2006 (the filing date of the provisional patent application that resulted, through several continuation applications, in the US 11,533,794 patent to Altamura).

3. Based on my education and experience, as described above and in my CV, as well as consistent with the '794 Patent (US 11,533,794 to Altamura) and the prior art described below, it is my opinion that those of ordinary skill in the art during the relevant period would have had a bachelor's degree in electrical engineering, physics, materials science, or a related discipline, and four years of practical experience in designing or fabricating LED lighting systems, including controlling and driving LEDs. Alternatively, a POSITA would have had a master's degree and three years of experience, or a Ph.D. degree and two years of experience.

4. Although I consider myself an expert in the field of electrical engineering, I am speaking for a POSA. On multiple occasions during my tenure in industry and academia, I have worked with students, post-graduate students, and engineers in industry, whose level of skills matches the level of skills of a POSA. Based on my experience, I am familiar with the capabilities and creativity of a POSA. For example, a POSA would be familiar with basic concepts of electrical engineering, such as series and parallel circuits, and the equations that govern these basic circuits, such as Ohm's law, as well as parallel resistor and series resistor circuit equations.

VII.D. Claim Construction Under 37 C.F.R. § 42.104(b)(3)

1. For purposes of this proceeding only, it is my opinion that no formal claim constructions are necessary because the challenged claims are invalid under their plain and ordinary meanings, and I have been advised that "claim terms need only be construed 'to the extent necessary to resolve the controversy.'" Wellman, Inc. v. Eastman Chem. Co., 642 F.3d 1355, 1361 (Fed. Cir. 2011) (quoting Vivid Techs., Inc. v. Am. Sci. & Eng'g, Inc., 200 F.3d 795, 803 (Fed. Cir. 1999)).

VII.E. The Challenged Claims of the '794 Patent

1. The challenged claims are shown in the table below:

Claim	Limitation
[1pre]	A resistor bypass circuit for a lighting circuit comprising …
[1a]	a plurality of serially connected LED light sources and a bypass resistor being connected in parallel with at least one of the respective light sources …
[1b]	said bypass resistor being in circuit and conducting current at all times across the light sources when current is flowing through the circuit regardless of whether the LED light sources are conducting current therethrough.
[2]	The resistor bypass circuit of claim 1, where the circuit is series-parallel connected.
[3]	The resistor bypass circuit of claim 1 wherein at least one of the light sources is a semiconductor providing a twinkling effect, and wherein the semiconductor light source utilizes electronic circuits that control the flashing rate of the light source.
[4]	The resistor bypass circuit of claim 1, wherein the LED light source uses 0.20 watts or less.

Claim	Limitation
[5]	The resistor bypass circuit of claim 1, at least one of the light sources is a semiconductor light source providing a twinkling effect.
[6]	The resistor bypass circuit of claim 1, at least one of the light sources is a semiconductor light source utilizing electronic circuits that control the flashing rate of the light source, which would only affect the individual lighting element as the resistive bypass would allow current to continue to flow in remaining lighting elements in the series circuit.
[8]	The resistor bypass circuit of claim 1 being utilized in AC or DC circuits powered form a power source selected from the list consisting of batteries, step down transformers, AC utility power, or converters from AC to DC or DC to AC power, pulsed DC, and filtered or unfiltered DC, or partially filtered AC.
[9pre]	A resistor bypass circuit for a series lighting circuit comprising …
[9a]	a plurality of serially connected LED light sources and a bypass resistor being connected in parallel with at least one of the respective light sources …
[9b]	said bypass resistor being in circuit and conducting current at all times when current is flowing through the circuit regardless of whether the LED light sources are conducting current therethrough …[4]
[9c]	further including an LED flashing light source which includes a flashing circuit which causes the entire light circuit to flash.
[10pre]	A resistor bypass circuit for a lighting circuit comprising …

[4] The claim term "in circuit" is used in conjunction with an electrical circuit element being "in circuit." The claim term "in circuit" is not a generally recognized term, but would be interpreted by a POSA to refer to a circuit element that is in the current path of the circuit.

Claim	Limitation
[10a]	a plurality of serially connected LED light sources and a bypass resistor being connected in parallel with at least one of the respective light sources …
[10b]	said bypass resistor connected across the at least one light sources and being in circuit and conducting current at all times when current is flowing through the circuit regardless of whether the LED light sources are conducting current therethrough …
[10c]	wherein the resistance of the bypass resistor is equal to or greater than the inherent resistance of the light source to which the resistor is attached.
[11]	The resistor bypass circuit of claim 10, the light source being a semiconductor light source for providing color changing characteristics.
[12]	The resistor bypass circuit of claim 10, the semiconductor light source utilizing LED packages that incorporate two or more LED chips, and an integrated circuit (IC), the integrated circuit controlling each LED chip in respective LED packages independently.
[13]	The resistor bypass circuit of claim 12, the IC controlling the current and/or voltage to the individual LED chips in the LED package, the control providing for the mixing of the LED chip colors to get various resultant colors.
[14]	The resistor bypass circuit of claim 13, the control only affecting individual lighting element, the bypass resistor providing for current continuing to flow in remaining lighting elements in the series circuit.
[15pre]	A method of bypassing an LED light source, having a predetermined resistance to current flow, in a serially connected LED light string having at least one light source, the method comprising …

Claim	Limitation
[15a]	the steps of selecting a bypass resistor with the following characteristics: a resistance greater than or equal to the predetermined resistance of said LED light source; the ability to carry all of the current in the light string; and the ability to operate at 100% duty cycle …
[15b]	inserting said bypass resistor in parallel with said at least one LED light source.

VIII. Overview of the prior art

1. As a preliminary remark, I note that Holler, Fisherman, Smith, Inoue, and Callahan are all in the same field of endeavor, which generally is series string lighting products based on incandescent and LED lighting sources.

VIII.A. Overview of the Inoue prior art

1. Inoue-'162 ("Inoue") discloses and/or obviates the claim limitation. Inoue discloses: "**[0002] The present invention relates to a lighting device and a lighting system that allows a plurality of light sources to light up at different luminance levels from each other.**" (Inoue, [0002]).

2. Inoue discloses a combination on LED light sources connected in series, with each light source shunted by a bypass resistor: "**[0011] According to the present invention, a lighting device that allows a plurality of serially-connected light**

sources to light up, includes: current setting sections that are connected in series to the light sources respectively to constitute serial circuits and set a forward current value flowing through the light sources; and shunt sections that are connected in parallel to at least one of the serial circuits constituted by the current setting sections and light sources and shunt current when a voltage higher than rated voltages of the light sources is applied to the serial circuits." (Inoue, [0011], underlining added).

3. The lighting circuit shown in Inoue's Figure 3, reproduced below, includes serially connected LEDs with each LED being shunted by a bypass resistor.

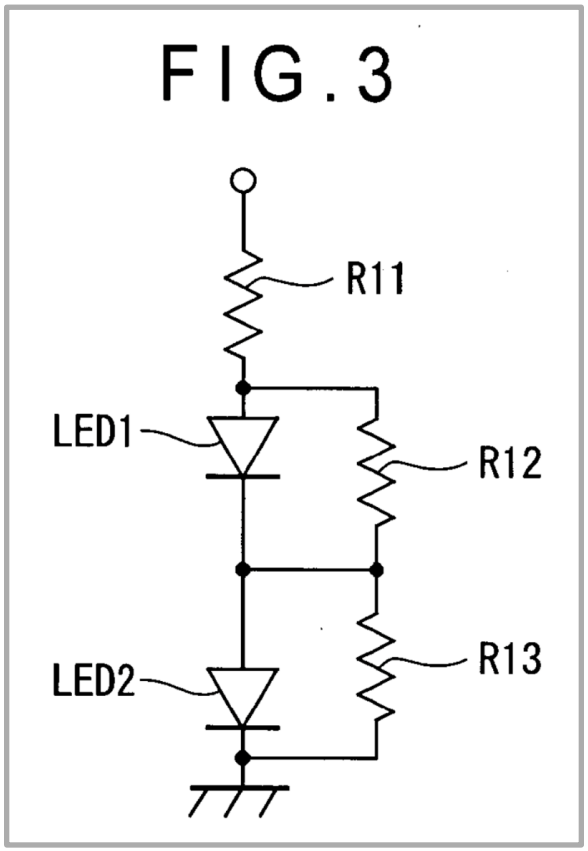

Figure caption: Inoue, Fig. 3, showing two LEDs (LED1 and LED2) in a series circuit, with each LED being shunted by a parallel bypass resistor (R12 and R13).

VIII.B. Overview of the Holler prior art

1. Holler-'847 ("Holler") relates to series lighting strings for holiday decoration. Holler-'848 states: "**This invention relates to means for lighting Christmas trees by electricity. Heretofore it has been customary to place the lamps at various desired locations on the tree and connect eight lamps rated at fifteen volts each across the usual 110 volt circuit such as is commonly employed for general lighting and power purposes.**" (Holler, 1:9-16) Holler discloses that the lamps are incandescent light bulbs that are connected in a series electrical circuit, which Holler-'847 characterizes as being an "**electric conducting loop adapted to have its terminals connected with a source of supply, said loop comprising a plurality of incandescent lamps connected in series.**" (Holler, 1:39-43)

2. Holler realizes that the series-connection of incandescent light sources pose a reliability problem: When one light bulb burns out, the entire lighting string ceases to be lit and goes dark. Holler states: "**With this arrangement, however, if one of the lamps fails the circuit through the whole light will be broken so that they all will be extinguished. It is not readily apparent which one the disabled lamp is so that considerable trouble and time in locating the lamp so that the illumination may be reestablished, are required.**" (Holler, 1:16-24) In order to overcome the problem, Holler-'847 discloses a lighting circuit in which each incandescent lamp is shunted by a bypass resistor. Holler states:

> "**To this end I propose to provide a unitary electric conducting loop adapted to have its terminals connected with a source of supply, said loop comprising <u>a plurality of incandescent lamps connected in series and each lamp having permanently electrically connected in shunt</u> with it and mounted upon the loop whereby the whole forms a single structure which can be connected and disconnected from the electric supply as readily as a single lamp, and on account of its unitary and permanent structure requires no fit**

together or adjustment of parts but wherein <u>the disabling of one of the lamps will not result in the extinguishment of the others</u> so that the entire illumination will not be destroyed upon the disabling of one of the lamps and the disabled lamp is readily located so that a new lamp may be substituted without difficulty." (Holler, 1:38-58, underlining added)

3. The electrical circuit diagram disclosed by Holler is a series circuit that includes the incandescent light sources as well as the bypass resistors shunting the light sources as shown in the image below.

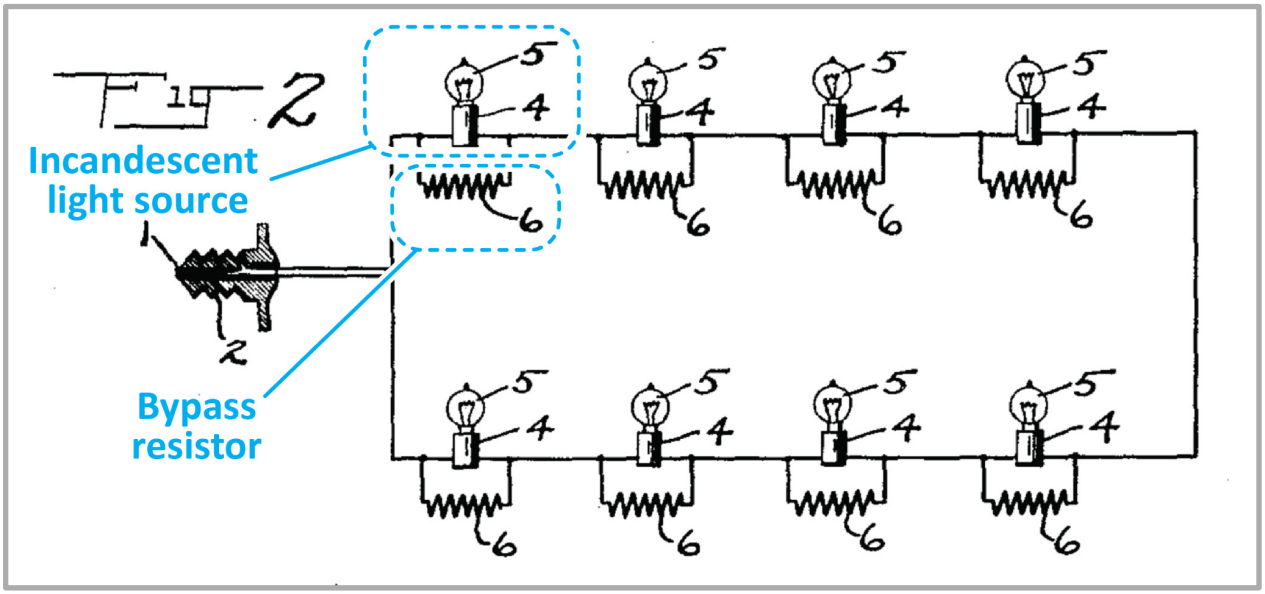

Figure caption: Holler, Fig. 2, showing incandescent light sources and associated bypass resistors (also called shunts), connected in a series circuit (annotated).

4. The electrical lamp disclosed by Holler includes an incandescent light source as well as a bypass resistor shunting the light source, as shown in the image below.

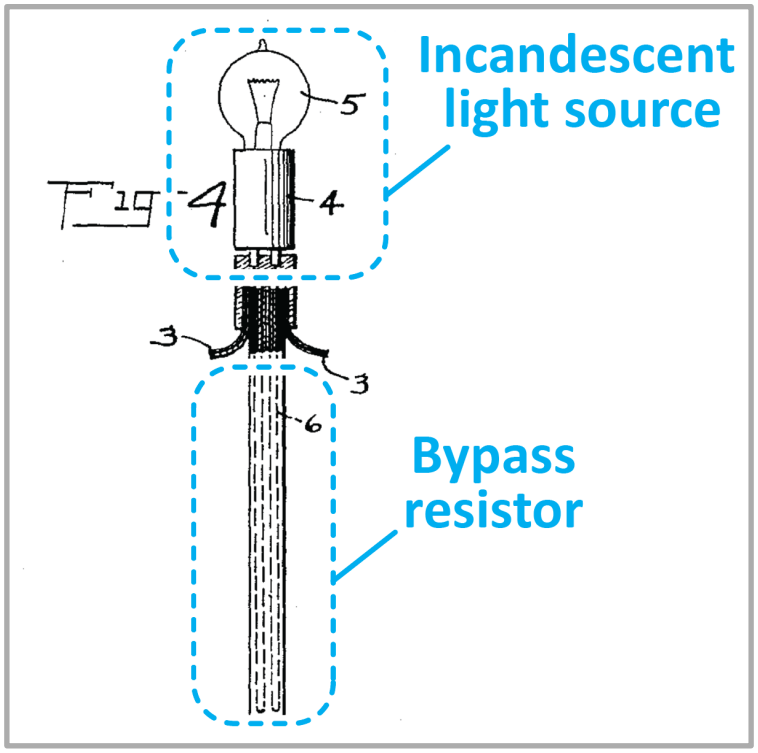

Figure caption: Holler, Fig. 4, showing an incandescent light source (lamp **5**) and associated bypass resistor, also called shunt (resistance wire **6**) (annotated).

VIII.C. Overview of the Smith prior art

1. Smith-'575 ("Smith") relates to light-emitting diode (LED) string lights that are connected in various electrical configurations including a series circuit configuration. Smith describes the LED lighting system as follows:

> "**A light string system is provided having a plurality of mono-color or bi-color light-emitting diodes electrically connected thereto. [...] The light-emitting diodes may be adapted for use as Christmas tree strings and various AC and DC control circuits are provided for driving the light-emitting diodes [...]. In a preferred embodiment of the Christmas tree string of lights, a master trunk line and a plurality of limb lines are provided. [...] This string uses a series–parallel configuration wherein the upper and lower portion of the master trunk line and the individual light-emitting diodes within each limb line are connected in series while the limb line sets are connected in parallel [...].**" (Smith, Abstract)

2. The series–parallel configuration disclosed by Smith is shown in the figure below. Within one limb of a Christmas tree, the LEDs are connected in a series circuit. Multiple limbs are connected in a parallel manner. Inspection of the image reveals that one lighting string (one limb) includes 20 LEDs light sources.

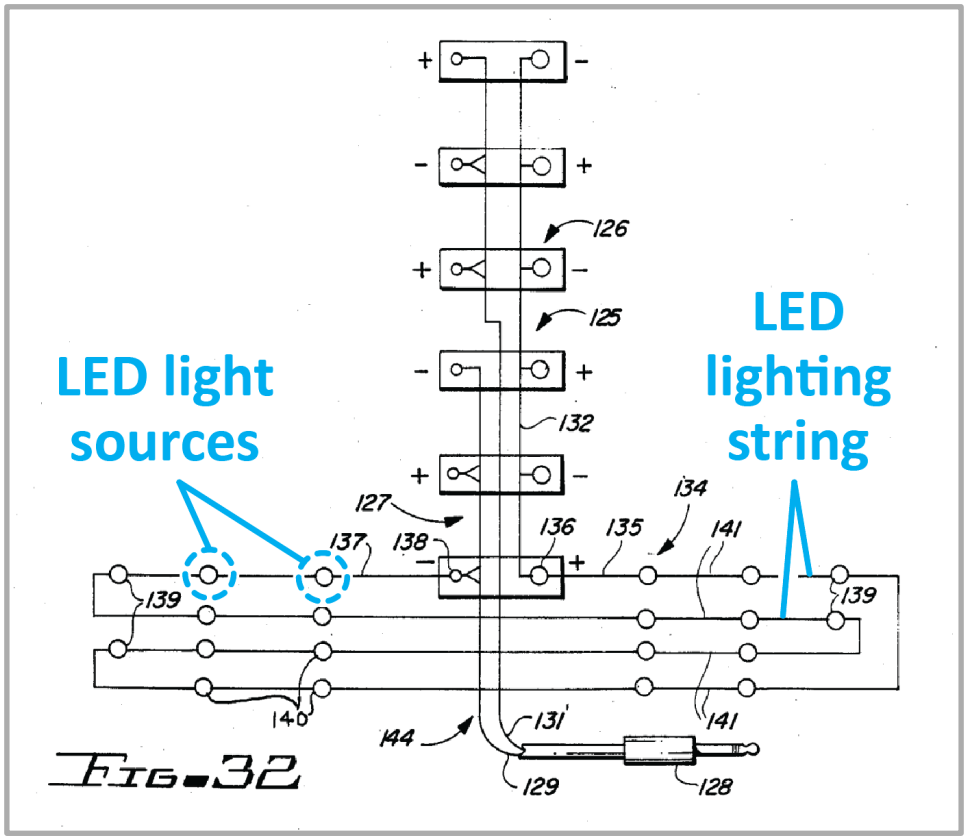

Figure caption: Smith, Fig. 32, showing LED light sources, connected in a series LED lighting string circuit (annotated).

3. The LEDs disclosed by Smith also include bi-directional LEDs, as shown in the image below. In such a bi-directional LED, two LED chips are connected in an anti-parallel manner thereby allowing such LEDs to be driven by an AC voltage. Furthermore, Smith's control circuits when applied to LED light sources allows them to change color, flash, blink, and twinkle.

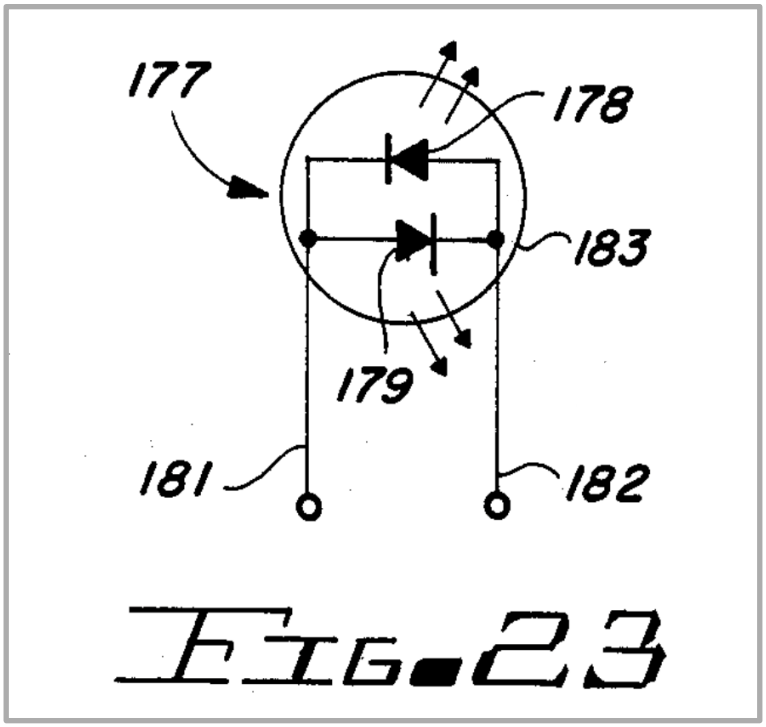

Figure caption: Smith, Fig. 23, showing a bi-directional LED light source in which two LEDs are connected in an anti-parallel manner.

4. Smith points out numerous problems of incandescent lighting. Specifically, Smith describes the disadvantages of incandescent light sources as follows: "**The primary shortcomings of the standard incandescent light bulb include the fact that it consumes very significant amounts of electrical power; it has a relatively short life due to frequent burnout, breakage, and the like; it dissipates a tremendous amount of heat which can burn a person's hands or otherwise injure person, pets or property. The incandescent light bulbs in use today present significant fire hazards in many uses, both from heat and from short circuits. Additionally, these bulbs have very slow switching speeds; they come in white only; and they break quite easily causing frequent replacement even for those bulbs placed in hard-to-reach areas where replacement is extremely time consuming and results in greatly increased expense.**" (Smith, 1:20-34) Furthermore, Smith explains that these significant disadvantages are shared by newer, miniaturized incandescent light sources: "**While these miniature light bulbs represent a significant improvement over the standard or larger incandescent**

light bulbs, they are subject to the same problems although usually to a lesser extent." (Smith, 1:39-42)

5. Smith concludes that LED lighting systems do not suffer from the disadvantages listed above. Smith states: "**The present invention provides an improved light-emitting diode bulb assembly and various light string and wiring configurations and control circuitry therefore for solving substantially all of the problems of the prior art and providing many unique advantages thereover.**" (Smith, 2:26-32)

VIII.D. Overview of the Fisherman prior art

1. The Fisherman (US patent No. 2,760,120) prior art discloses blinking incandescent lamps, **10**, in a series lighting circuit having multiple incandescent lamps, with each lamp being connected in parallel to a shunting bypass resistor, **13**. A bimetallic strip, **12**, located in proximity to the lamp, heats up, due to the heat produced by the incandescent lamp. When heated, the bimetallic switch, which originally is in its ON (closed) state, transitions to its OFF (open) state, thereby interrupting the lamp current so that no current is flowing through the lamp (and its filament **11**). As the incandescent lamp cools down, the bimetallic strip transitions back to its ON (closed) state, thereby conducting electricity again. As a result, Fisherman's lamps are blinking light sources. Fisherman's series lighting circuit diagram, including lamps and bypass resistors, is shown below.

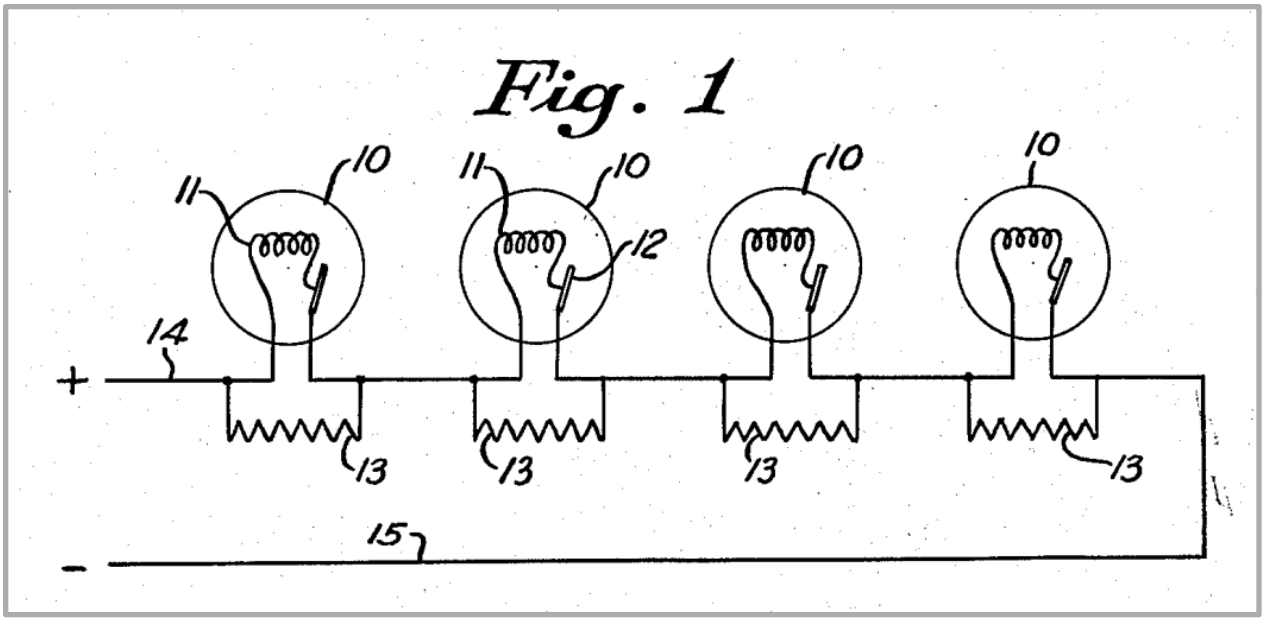

Figure caption: Fisherman, Fig. 1, showing a series lighting circuit that includes incandescent lamps 10 and bypass resistors 13.

2. A bimetallic strip consists of two metal layers having different coefficients of thermal expansion (CTE). At room temperature, the bimetallic switch is closed (ON state). When heated, the bimetallic strip, originally having a straight shape, transitions to a curved shape, which opens the bimetallic switch (OFF state).

3. The repeated heating-cooling cycles result in the incandescent lamps blinking (or flashing, or twinkling) in accordance with the parameters of the bimetallic strip and wattage of the lamp. Each lamp is connected to a bypass resistor, **13**, that shunts the lamp. If the lamp is in its OFF state, current continues to flow through the bypass resistor shunting the lamp, and through the entire series lighting circuit.

VIII.E. Overview of the Callahan prior art

1. The Callahan prior art patent (US patent No. 7,015,825) discloses LED packages[5] that include red, green, and blue (RGB) LED chips, as shown in Figure 1 of the Callahan patent. An LED driver, **12**, drives each of the LED chips with the proper power to create the desired mixed color output from the LED bulb, **20**. Virtually any color can be produced, since the RGB colors constitute the primary colors of human vision.

2. An example of an LED driver is shown as LED driver 12A in Callahan's Figure 2. SCL and SDA[6] comprise inputs to the driver which can store control signals in an EEPROM, **30**, prescalers, **36** and **38**, and pulse width modulators, **40** and **42**, that control the brightness register, **44**, for each of the LED packages. LED select register, **48**, selects the particular LED to be driven by the brightness register **44**. Power FETs **50**, **52**, and **54** are used to drive the LEDs **16A**, **17A**, and **18A**, respectively, in accordance with the output of the signal generator **46**. Figure 3 shows a serially connected LED lighting string. Figure 4 shows both a serial circuit and parallel circuit. Figure 5 shows a command controller, **63A**, that supplies power and control commands to the light sources, **10**, of the circuit. Figure 6 shows a command controller, **63B**, that includes a microprocessor, **101**, a modulator, **106**, and a power

---

[5] "LED package" (as used by Callahan) is a term for an LED enclosure that includes two or more LED chips, such as LED chips emitting the three primary colors (RGB). Such LED packages can be used to create a multitude of color blends.

[6] SCL = Serial clock; SDA = Serial data.

supply, **104**. An I^2C Bus,[7] **102**, is connected between the command controller and the light source, **10C**. The light source **10C** includes an LED driver **12**, an RGB LED package, and a demodulator **108**. The microprocessor generates command signals that are modulated by the modulator, **106**, on to the power signal 104. The I^2C Bus, **102**, transmits power and control signals to the light source **10C**. Demodulator **108** strips the modulated control signals and the appropriate power signal is applied directly to the LED driver **12**. The SCL and SDA control signals are transmitted to the LED driver for controlling the LED driver. The LED packages can be made to blink (or flash), change colors, or combination thereof. Callahan's additional figures (Figures 7-10) show variations of the basic designs described above.

3. The Background Section of Callahan (Callahan, 1:20-44) describes LED light sources as replacements for conventional light sources (such as incandescent light sources). As described in Callahan, LED light sources have multiple advantages (such as improved power conservation and reliability) over incandescent light sources.

VIII.F. Overview of the Yu prior art

1. The Yu prior art U.S. patent application publication (US patent publication No. 2008/0,025,024 or "Yu") discloses LED lighting strings with a series-parallel configuration. Yu's light sources are light-emitting diodes (LEDs). In the embodiment shown in Yu's Figure 3 (reproduced below), each of the LEDs is shunted by a bypass resistor that is connected in parallel to the LED. The lighting string possesses superior reliability over the prior art.

---

[7] The I^2C communicating integrated circuit is a standard IC (integrated circuit) for communication & control.

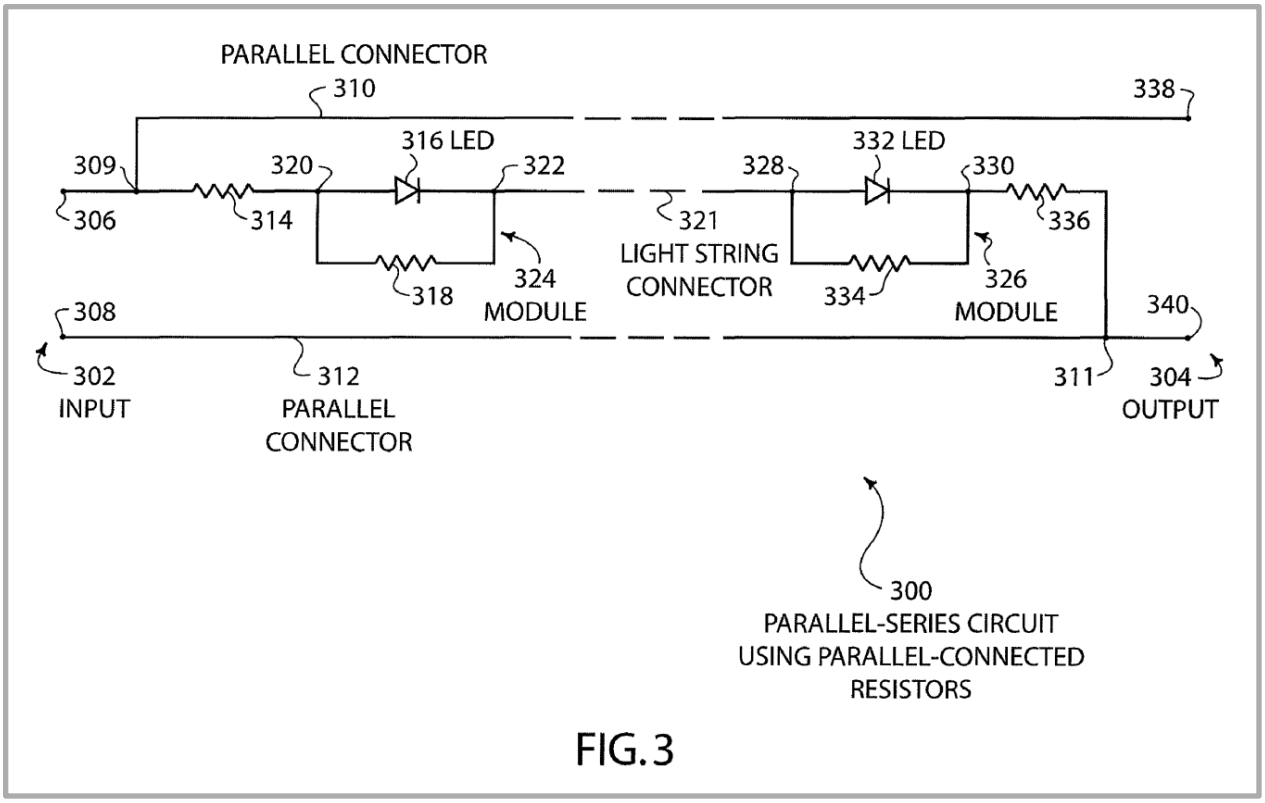

Figure caption: Yu, Fig. 3, showing a series-parallel lighting circuit that includes LED light source **316** and bypass resistor **318**.

2. Yu discloses: "**Disclosed is a LED light string that uses parallel connected resistors that are connected across the leads of the LEDs in a light string and are disposed in the socket of the LED lamp holder. The use of parallel connected resistors across the leads of the LEDs greatly enhances the reliability of the light string.**" (Yu, Abstract, underlining added) Yu further discloses: "**An embodiment of the present invention may therefore comprise a parallel-series wired light string comprising: [...] a plurality of LED modules wired in series [...] a second resistor disposed in the LED holder that is wired in parallel with the LED across the leads.**" (Yu, [0005], underlining added) Yu yet further discloses: "**Each module contains a LED and a resistor connected in parallel. For example, module 324 includes a LED 316 which is connected in parallel with a resistor 318.**" (Yu, [0014], underlining added)

3. The LED and its associated bypass resistor may be integrated into a lamp assembly, as shown in Yu's Figure 4, reproduced below. Yu discloses: "**FIG. 4 is a schematic illustration of a LED lamp assembly 382 that corresponds to the module 324 of FIG. 3. [...] The resistor 318 is also connected across the leads 388, 390 of the LED 316 at nodes 338, 340 to place the resistor 318 in parallel with the leads of LED 316. In this manner, the reliability of the light string can be greatly enhanced [...].**" (Yu, [0017], underlining added)

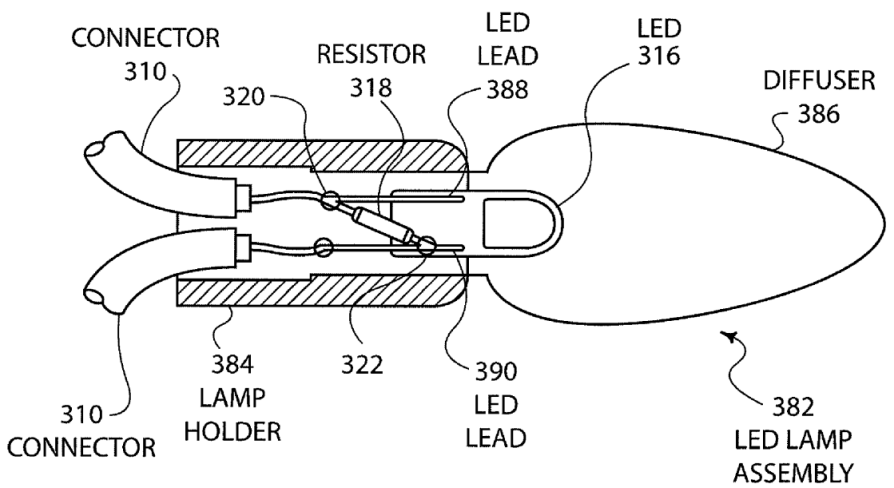

FIG. 4

Figure caption: Yu, Fig. 4, showing an LED lamp assembly, **382**, including an LED, **316**, and a bypass resistor, **318**, located in the lamp base.

IX. Ground 1: Inoue anticipates Claim 1

IX.A. [1pre] "A resistor bypass circuit for a lighting circuit comprising ..."

1. Inoue discloses the claim limitation. Inoue discloses a combination on LED light sources connected in series, with each light source shunted by a bypass

resistor: "**[0011] According to the present invention, a lighting device that allows a plurality of <u>serially-connected light sources</u> to light up, includes: current setting sections that are connected in series to the light sources respectively to constitute serial circuits and set a forward current value flowing through the light sources; and <u>shunt sections that are connected in parallel</u> to at least one of the serial circuits constituted by the current setting sections and light sources and shunt current when a voltage higher than rated voltages of the light sources is applied to the serial circuits.**" (Inoue, [0011], underlining added).

2. Inoue also discloses: "**[0008] In order to cope with this problem, it can be considered that a circuit configuration as shown in FIG. 3 in which the <u>LEDs 1 and 2 are serially connected</u> is employed to individually set the luminance levels of the LEDs 1 and 2. That is, as shown in FIG. 3, the <u>resistors R12 and R13 are connected</u> to the serially-connected LEDs 1 and 2, respectively <u>in parallel</u>. Resistance values of the resistors R12 and R13 <u>are set to shunt</u> current appropriately.**" (Inoue, [0008], underlining added)[8]

3. Inoue's Figure 3 is shown below. Inspection of the figure reveals a plurality of serially connected LED light sources with each LED being shunted by a bypass

---

[8] When choosing a resistor, a POSA would have the ability to select a resistance value that creates a circuit having desired features. For example, a POSA would have the ability to select resistance values to achieve a specific desired brightness value of an LED, or a group of LEDs. Similarly, a POSA would have the ability to choose the wattage of a resistor so that the resistor can handle the power it is intended for. A POSA would understand that if the actual wattage used during operation exceeds the wattage the resistor was designed for, the resistor will likely fail.

resistor. Each LED has one bypass resistor connected in parallel to the LED. An LED is a lighting device. Making LEDs part of an electrical circuit, and connecting the LEDs in a serial manner, constitutes a series lighting circuit.

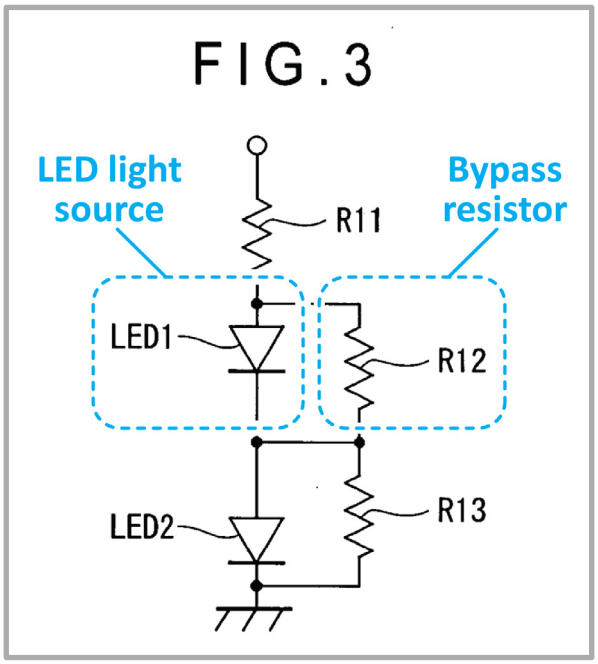

Figure caption: Inoue, Fig. 3, showing two LEDs (LED1 and LED2) in a series circuit, with each LED being shunted by a parallel bypass resistor (R12 and R13) (annotated).

IX.B. [1a] "a plurality of serially connected LED light sources and a bypass resistor being connected in parallel with at least one of the respective light sources …"

1. Inoue discloses the claim limitation. Inoue discloses: "**[0022] [...] The lighting system 100 includes a plurality of (for example, two) <u>light-emitting diodes LED 1 and LED 2</u> serving as light sources, and a lighting device 110 that allows the LEDs 1 and 2 to light up.**" (Inoue, [0022], underlining added)

2. Inoue discloses a combination of LED light sources connected in series, with each light source shunted by a bypass resistor: "**[0011] According to the present invention, a lighting device that allows a plurality of <u>serially-connected light</u>**

sources to light up, includes: current setting sections that are connected in series to the light sources respectively to constitute serial circuits and set a forward current value flowing through the light sources; and shunt sections that are connected in parallel to at least one of the serial circuits constituted by the current setting sections and light sources and shunt current when a voltage higher than rated voltages of the light sources is applied to the serial circuits." (Inoue, [0011], underlining added).

3. Inoue also discloses: "**[0008] In order to cope with this problem, it can be considered that a circuit configuration as shown in FIG. 3 in which the LEDs 1 and 2 are serially connected is employed to individually set the luminance levels of the LEDs 1 and 2. That is, as shown in FIG. 3, the resistors R12 and R13 are connected to the serially-connected LEDs 1 and 2, respectively in parallel. Resistance values of the resistors R12 and R13 are set to shunt current appropriately.**" (Inoue, [0008], underlining added)

4. Inoue's Figure 3 is shown below. Inspection of the figure reveals a plurality of serially connected LED light sources. Light emitting diodes or LEDs are semiconductor light sources. LED1 is connected to bypass resistor R12 in a parallel manner. Similarly, LED2 is connected to bypass resistor R13 in a parallel manner.

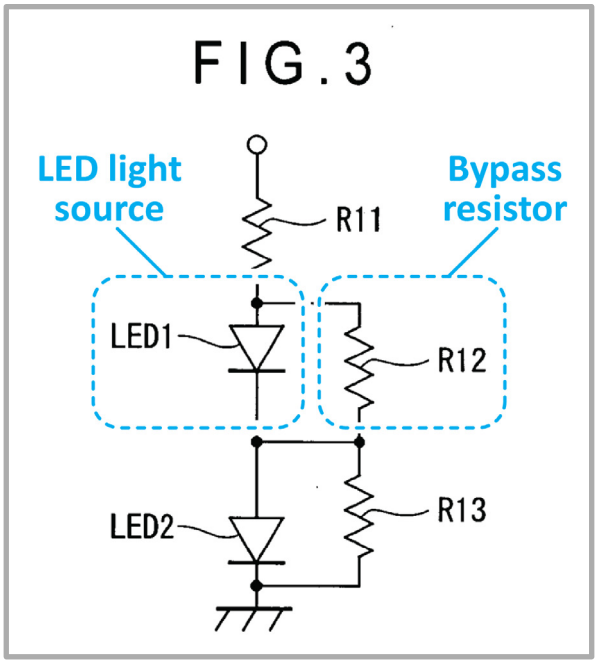

Figure caption: Inoue, Fig. 3, showing two LEDs (LED1 and LED2) in a series circuit, with each LED being shunted by a parallel bypass resistor (R12 and R13) (annotated).

5. Inoue discloses a series connected LED light source, with each light source shunted by a bypass resistor: "**[0011] According to the present invention, a lighting device that allows a plurality of <u>serially-connected light sources</u> to light up, includes: current setting sections that are connected in series to the light sources respectively to constitute serial circuits and set a forward current value flowing through the light sources; and <u>shunt sections that are connected in parallel</u> to at least one of the serial circuits constituted by the current setting sections and light sources and shunt current when a voltage higher than rated voltages of the light sources is applied to the serial circuits.**" (Inoue, [0011], underlining added).

6. Inoue further discloses: "**[0008] In order to cope with this problem, it can be considered that a circuit configuration as shown in FIG. 3 in which the <u>LEDs 1 and 2 are serially connected</u> is employed to individually set the luminance levels of the LEDs 1 and 2. That is, as shown in FIG. 3, the <u>resistors R12 and R13 are connected</u> to the serially-connected LEDs 1 and 2, respectively <u>in parallel</u>.**

Resistance values of the resistors R12 and R13 <u>are set to shunt</u> current appropriately." (Inoue, [0008], underlining added)

7. Inoue yet further discloses: "**[0030] [...] The lighting circuit shown in FIG. 3 of a comparative example has the circuit configuration in which the <u>resistors R12 and R13 that set the luminance levels of the LEDs 1 and 2 are respectively connected in parallel to the LEDs 1 and 2</u> of the lighting circuit shown in FIG. 1.**" (Inoue, [0030], underlining added)

IX.C. [1b] "said bypass resistor being in circuit and conducting current at all times when current is flowing through the circuit regardless of whether the LED light sources are conducting current therethrough."

1. Inoue discloses the claim limitation. The claim limitation ensures that current is flowing through the bypass resistor when current is flowing through the LED light source, as well as when no current is flowing through the LED light source. When an LED, for example LED1 is Inoue's Fig. 3, is defective, the current flow through it becomes zero and its resistance becomes infinite. Two cases are shown in the figure below: On the LHS[9] of the figure, current is flowing through LED1, whereas on the RHS[10] of the figure, the current flow through LED1 is interrupted, so that no current is flowing through LED1. A POSA would realize that in both cases, the LHS case and RHS case, current is flowing through the bypass resistor R12.

---

[9] LHS = Left-hand side

[10] RHS = Right-hand side

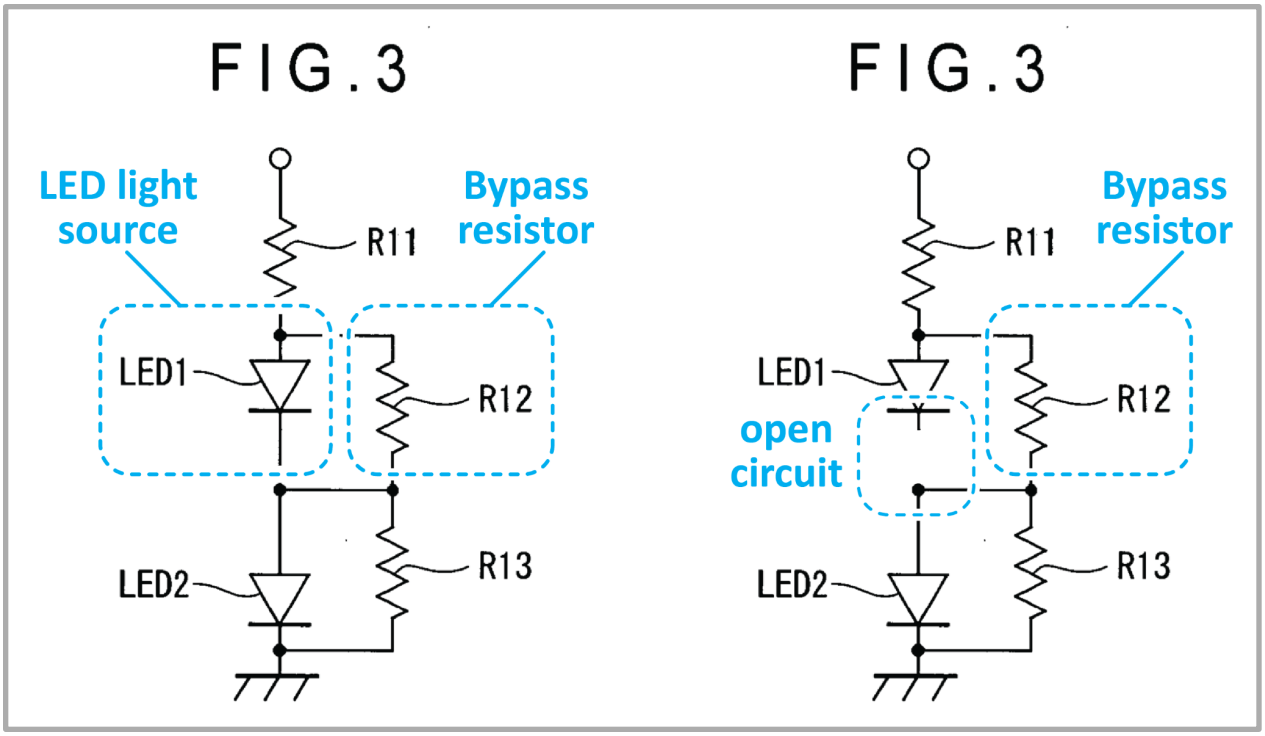

Figure caption: LHS:[11] Inoue, Fig. 3. RHS:[12] Inoue, Fig. 3, with LED1 circuit opened (interrupted) so that no current can flow through LED1 (modified and annotated).

2. Inoue further discloses: "**[0030] [...] The lighting circuit shown in FIG. 3 of a comparative example has the circuit configuration in which the <u>resistors R12 and R13 that set the luminance levels of the LEDs 1 and 2 are respectively connected in parallel to the LEDs 1 and 2</u> of the lighting circuit shown in FIG. 1.**" (Inoue, [0030], underlining added)

3. The voltage that drops across the LED light source, also and inevitably drops across the parallel bypass resistor (shunt) causing, based on Ohm's law, a current through the bypass resistor. The current through the bypass resistor is given by Ohm's law:

$$I = V / R.$$

[11] LHS = Left-hand side

[12] RHS = Right-hand side

4. The current flows, even if the associated light source has failed and is an open circuit.

5. Let us assume that one of the light sources has failed (burned out).[13] In this case, the resistance of the light source is infinite so that no current is flowing through the light source and the entire current flowing through the series lighting circuit is also flowing through the bypass resistor.

6. In case in which one lamp (out of the *N* lamps) has burned out, the current flowing through the bypass resistor associated with the failed light source is given by

$$I = V / ((N - 1) \times (R_{\text{LightSource}} \,||\, R_{\text{Bypass}}) + R_{\text{Bypass}}).$$ [14]

where $R_{\text{LightSource}}$ is the resistance of the light source, R_{Bypass} is the resistance of the bypass resistor, and ($R_{\text{LightSource}} \,||\, R_{\text{Bypass}}$) is the resistance of a lamp, that is, the light source resistance ($R_{\text{LightSource}}$) connected in parallel to the bypass resistance (R_{Bypass}). The lamp resistance (R_{Lamp}) is the resistance of two parallel resistances and can be calculated by the following equation

---

[13] In an incandescent lamp, the failure is commonly (or virtually always) caused by the tungsten filament burning out, that is, the tungsten filament is locally melted and evaporated so that the filament is electrically interrupted. As a result, the light source has failed to become an open circuit having infinite resistance and drawing no current. The most common failure mode of LED light sources is similar: LEDs fail by becoming an open circuit having infinite resistance so that no current is flowing through the LED light source.

[14] The notation "R1 || R2" is used to indicate that the two resistances, R1 and R2, are connected in parallel.

$$R_{\text{Lamp}}^{-1} = R_{\text{LightSource}}^{-1} + R_{\text{Bypass}}^{-1}.$$

7. The equations used above are among the most elementary equations of electrical engineering, such as Ohm's law equation, and a resistance equation for two resistors connected in parallel. A POSA would be in command of these equations since they are consistently taught in the electrical engineering curriculum.[15]

8. Based on the reasoning given above, a POSA would conclude that "said bypass resistor being in circuit and conducting current at all times when current is flowing through the circuit regardless of whether the LED light sources are conducting current therethrough." (claim limitation [1b])

X. Ground 2: Inoue in view of Holler obviates Claims 1, 10, and 15

X.A. Motivation to combine Inoue with Holler

1. Both Inoue and Holler are in the same field of endeavor, which is series connected lighting strings having resistive bypass elements. There are multiple reasons for combining Inoue and Holler. Inoue states "**the light source used in the present invention is not limited to the LED, and any light emitting object including, for example, a lamp such as an electric bulb can be applied**." (Inoue, [0021]) In other words, Inoue teaches that LEDs and incandescent bulbs are equally suitable for use in lighting strings, and, given the similar drive voltages for both

[15] These equations are also taught in related college curricula such as applied physics, material science, and mechanical engineering.

types of light sources (about 3.0 V), are in fact interchangeable. The results of interchanging LEDs and incandescent bulbs are predictable and known in the art, as evidenced by Inoue's statement. In addition, a POSA would understand that various drive circuits, including the same drive circuits, can be used for LEDs and incandescent bulbs. The replacement of incandescent light sources with LED light sources is motivated by the lower energy consumption of LEDs (with a reduction of, for example, a factor of 10), greater versatility of LEDs (capable of emitting multiple colors), and longer lifetime of LEDs (with a more than 10 times longer lifetime being typical). In addition, replacement of incandescent bulbs with LEDs yields predictable results. In 2006, the operation of LEDs was well understood. Use of LEDs in place of incandescent bulbs is a simple substitution of one known element for another, yielding predictable results. The use of LEDs in place of incandescent bulbs is a known strategy to improve a lighting product, including a string lighting product. Based on the above-detailed reasoning, a POSA would be motivated to replace the incandescent light sources of Holler with the LED light sources of Inoue.

2. As discussed below, Holler has specific teachings on the quantitative value of the bypass resistor ("**It has been found that good results are obtained if each of the resistances 6 is made of a resistance equal to that of the lamp [...].**" Holler, 1:96-101) Holler's teachings of the bypass resistance values (in conjunction with incandescent light sources) can be applied in a predictable manner to Inoue's bypass resistance values (in conjunction with LED light sources). The predictable nature and operation of resistors allows one to have a reasonable expectation of success.

X.B. [1pre] "A resistor bypass circuit for a lighting circuit comprising …"

1. As I have discussed in Ground 1, Inoue discloses the claim limitation. The combination of Inoue with Holler also discloses and/or obviates the claim limitation, as described below.

2. Holler discloses and/or obviates the claim limitation. One embodiment of Holler has a series circuit of eight (8) lamps that are driven by the regular household line voltage of 110 V AC: "**Heretofore it has been customary to place the lamps at various desired locations on the tree and connect <u>eight lamps rated at fifteen volts each across the usual 110 volt circuit</u> such as is commonly employed for general lighting and power purposes.**" (Holler, 1:11-16, underlining added)

3. Holler also discloses a resistor bypass that shunts each of the light sources: "**To this end I propose to provide a unitary electric conducting loop adapted to have its terminals connected with a source of supply, said loop comprising a <u>plurality of incandescent lamps connected in series</u> and <u>each lamp having permanently electrically connected in shunt with it</u> and mounted upon the loop whereby the whole forms a single structure which can be connected and disconnected from the electric supply as readily as a single lamp [...].**" (Holler, 1:38-49, underlining added) And: "**Fig. 3 is a view on an enlarged scale of a fragment of the lighting loop showing the manner in which <u>each of the lamps and its resistance</u> is mounted upon and connected in the loop;**" (Holler, 1:68-72, underlining added)

4. In addition, Holler has a pictorial disclosure of the limitation as shown in the image below. Inspection of the image reveals a series circuit with eight incandescent light sources, connected in series, each light source **5** having a socket **4** and shunt resistor **6** (bypass resistor).

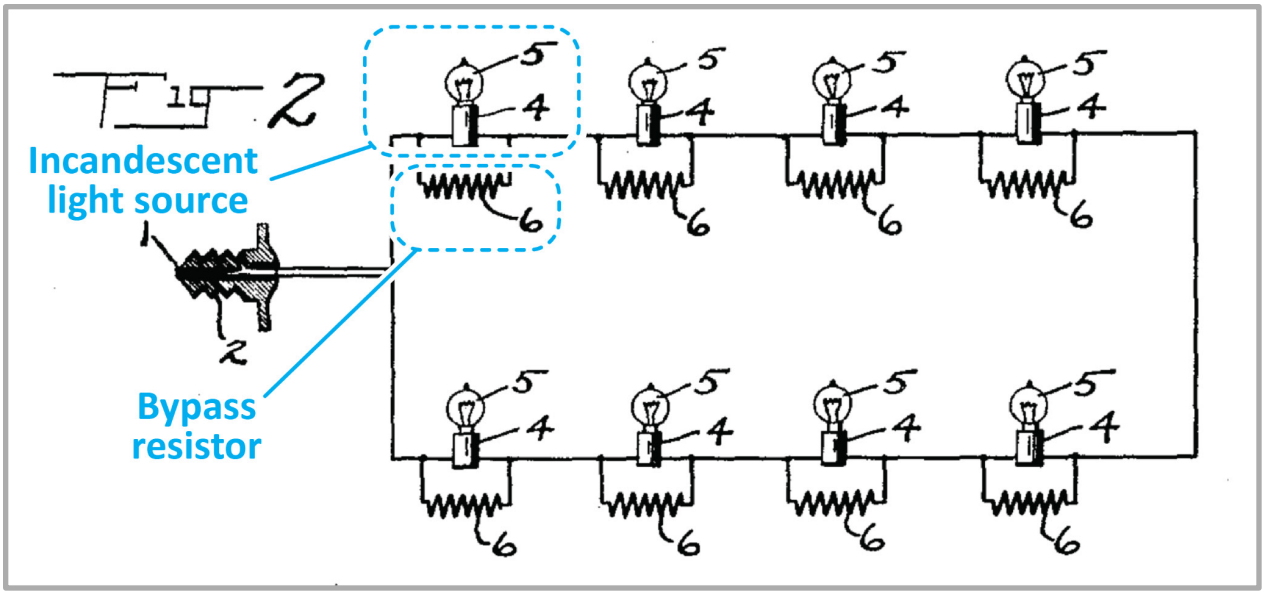

Figure caption: Holler, Fig. 2, showing incandescent light sources and associated bypass resistors (or shunts), connected in a series circuit (annotated).

X.C. [1a] "a plurality of serially connected LED light sources and a bypass resistor being connected in parallel with at least one of the respective light sources …"

1. As I have discussed in Ground 1, Inoue discloses the claim limitation. The combination of Inoue with Holler also discloses and/or obviates the claim limitation, as described below.

2. Holler does not use LED light sources but incandescent light sources. Applying the drive circuit in Holler to the LED light sources of Inoue would meet the claim limitation which requires LED light sources.

3. The drive circuit of Holler, shown below, meets the claim limitation, if the incandescent light sources of Holler are replaced by Inoue's LEDs.

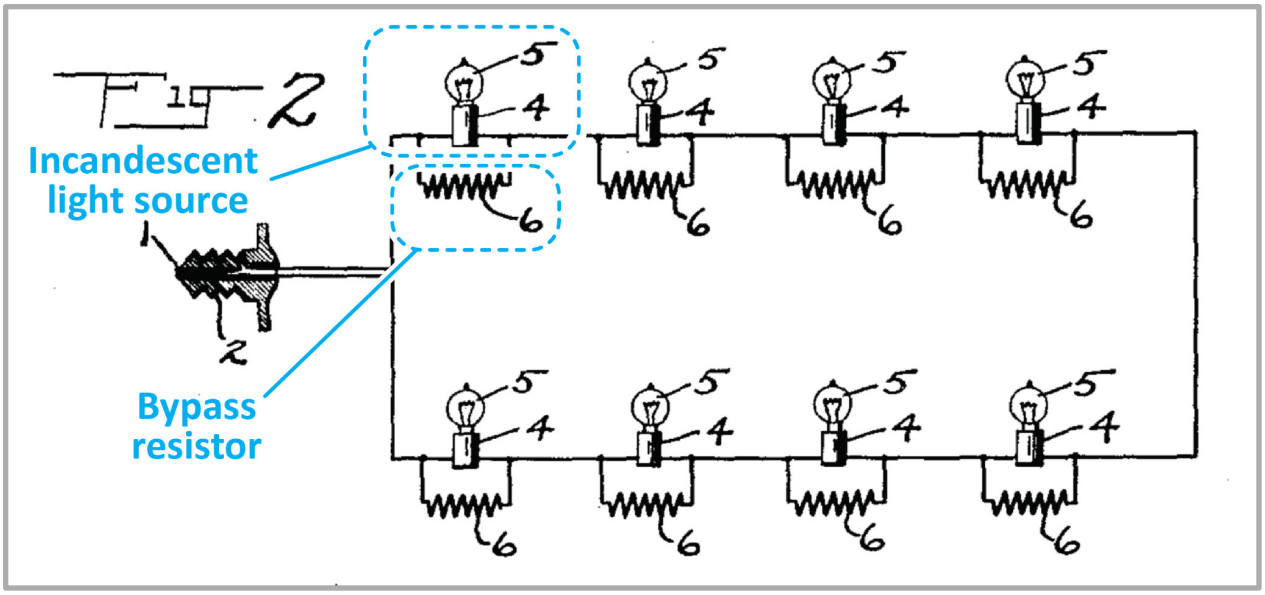

Figure caption: Holler, Fig. 2, showing incandescent light sources and associated bypass resistors (or shunts), connected in a series circuit (annotated).

X.D. [1b] "said bypass resistor being in circuit and conducting current at all times when current is flowing through the circuit regardless of whether the LED light sources are conducting current therethrough."

1. As I have discussed in Ground 1, Inoue discloses the claim limitation. The combination of Inoue with Holler also discloses the claim limitation, as described below.

2. Holler discloses a series lighting string that includes light sources and multiple bypass resistors, one bypass resistor connected in parallel with each of the light sources. Inspection of the circuit shown below shows that currents flow through the bypass resistors at all times when the circuit is provided with electrical power, regardless of whether the LED light sources are conducting current therethrough. Removing one of the light sources will not interrupt the current flow, because the electrical current continues to flow through the bypass resistor.

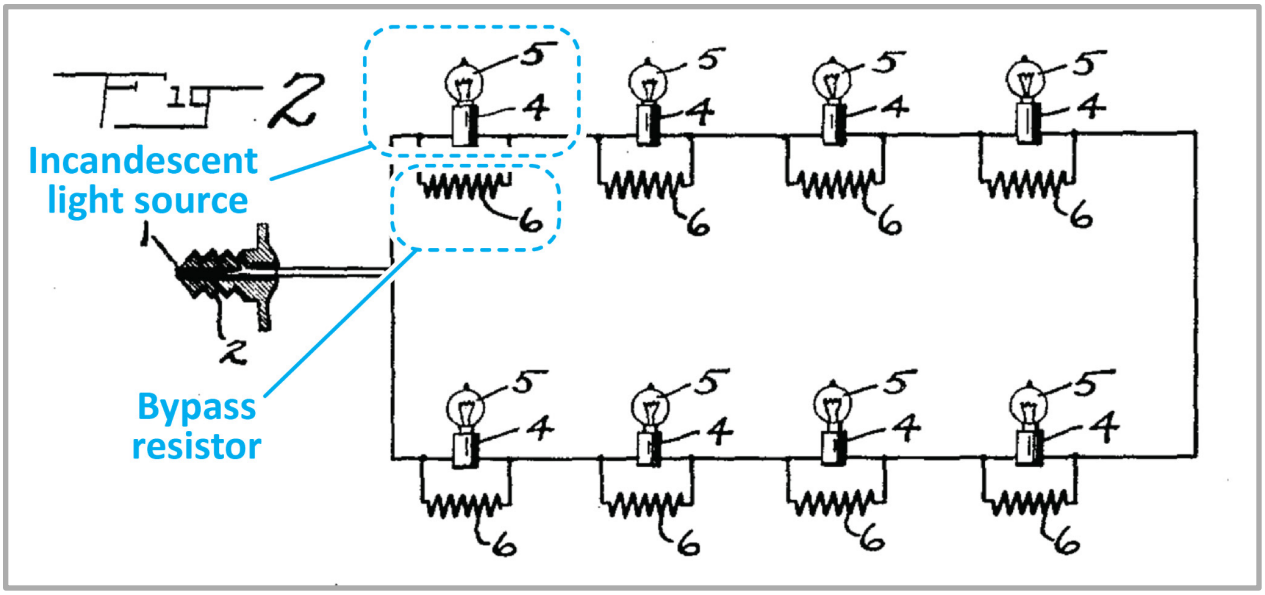

Figure caption: Holler, Fig. 2, showing incandescent light sources and associated bypass resistors (or shunts), connected in a series circuit (annotated).

3. The voltage that drops across the light source in Inoue as well as in Holler, also and inevitably drops across the parallel bypass resistor (shunt) causing, based on Ohm's law, a current through the bypass resistor. The current through the bypass resistor is given by Ohm's law:

$$I = V / R.$$

4. The current flows, even if the associated light source has failed and is an open circuit.

X.E. [10pre] "A resistor bypass circuit for a lighting circuit comprising …"

1. Inoue in view of Holler discloses and/or obviates the claim limitation. The present claim limitation is substantially similar to the [1pre] limitation, discussed above, and the same reasoning expressed under the [1pre] limitation applies here as well.

X.F. [10a] "a plurality of serially connected LED light sources and a bypass resistor being connected in parallel with at least one of the respective light sources …"

1. Inoue in view of Holler discloses and/or obviates the claim limitation. The present claim limitation is substantially similar to the [1a] limitation, discussed above, and the same reasoning expressed under the [1a] limitation applies here as well.

X.G. [10b] "said bypass resistor connected across the at least one light sources and being in circuit and conducting current at all times when current is flowing through the circuit regardless of whether the LED light sources are conducting current therethrough …"

1. Inoue in view of Holler discloses and/or obviates the claim limitation. The present claim limitation is substantially similar to the [1b] limitation, discussed above, and the same reasoning expressed under the [1b] limitation applies here as well.[16]

---

[16] There is a slight difference in claim language between claim [1b] and [10b], in that [10b] requires that the bypass resistor is "connected across the at least one light sources." However, this requirement was already addressed in [1pre] and [1a].

X.H. [10c] "wherein the resistance of the bypass resistor is equal to or greater than the inherent resistance of the light source to which the resistor is attached."

1. Inoue does not provide numerical values for the bypass resistor found in its series lighting circuits having bypass resistors, for example, the circuit diagram of Inoue's Figure 3, which shows bypass resistors R12 and R13. Inoue provides general quantitative guidance for the selection of the bypass resistors by stating: "**Resistance values of the resistors R12 and R13 are set to shunt current appropriately.**" (Inoue, [0008]) In addition, Inoue relies on the skills of a POSA, who would be familiar with Ohm's law so that "**resistors R12 and R13 are set to shunt current appropriately.**" Relying on the skills of a POSA,[17] Inoue's teachings regarding the resistance values for R12 and R13 encompass the resistance values recited in the claim limitation, thereby obviating the claim limitation.

2. To the extent that it is found that the claim limitation is not obviated by Inoue, Holler discloses the claim limitation as discussed below.

3. Holler explicitly discloses the claim limitation. Specifically, Holler discloses that the resistance of the bypass resistor should be the same as the resistance of the light source: "**It has been found that good results are obtained if each of the <u>resistances 6 is made of a resistance equal to that of the lamp</u> with which it is in shunt and of approximately twice the current carrying capacity.**" (Holler, 1:96-101, underlining added) Holler's teachings that the bypass resistors should have a resistance value that is "**equal to that of the lamp**" matches the claim limitation

[17] A POSA would be familiar with Ohm's law which forms the basis of determining the resistance values of R12 and R13, as discussed further in the present section.

which encompasses the equalness of bypass resistance and lamp resistance ("bypass resistor is equal to or greater than the inherent resistance of the light source").[18]

X.I. [15pre] "A method of bypassing an LED light source, having a predetermined resistance to current flow, in a serially connected LED light string having at least one light source, the method comprising the steps of …"

1. Inoue in view of Holler discloses the claim limitation. As discussed under Claim limitation [1pre] and [1a], Inoue discloses an apparatus that includes and/or obviates the features recited in the present claim.

2. An apparatus is necessarily fabricated by a fabrication method. Because the apparatus meets the claim requirements, the fabrication method necessarily includes …

- … the step of serially connecting LED light sources,
- … the step of determining the resistance values of the bypass resistors, and
- … the step of connecting the bypass resistors to the LEDs.

[18] Although the claim term "inherent resistance" is not defined, a POSA would be familiar with the "ohmic resistance" of a light source, such as an LED light source, whose ohmic resistance is given by Ohm's law as $R = V / I$.

X.J. [15a] "the steps of selecting a bypass resistor with the following characteristics: a resistance greater than or equal to the predetermined resistance of said LED light source; the ability to carry all of the current in the light string; and the ability to operate at 100% duty cycle …"

1. Inoue in view of Holler discloses an apparatus that meets the claim requirements.

2. Holler discloses that the bypass resistor has a resistance that is equal to or greater than the ohmic resistance of the light source. Specifically, Holler discloses that the resistance of the bypass resistor should be the same as the resistance of the light source: "**It has been found that good results are obtained if each of the <u>resistances 6 is made of a resistance equal to that of the lamp</u> with which it is in shunt and of approximately twice the current carrying capacity.**" (Holler, 1:96-101, underlining added) Holler's teachings that the bypass resistors should have a resistance value that is "**equal to that of the lamp**" matches the claim limitation which encompasses the equalness of bypass resistance and lamp resistance ("a resistance greater than or equal to the predetermined resistance of said LED light source").[19]

3. Furthermore, Holler discloses: "**It has been found that good results are obtained if each of the resistances 6 is made of a resistance equal to that of the lamp with which it is in shunt and of <u>approximately twice the current carrying</u>**

---

[19] Although the claim term "inherent resistance" is not defined, a POSA would be familiar with the "ohmic resistance" of a light source, such as an LED light source, whose ohmic resistance is given by Ohm's law as $R = V / I$.

capacity." (Holler, 1:96-101, underlining added) That is, Holler teaches that **(i)** the resistance of the bypass resistor (or shunt) should be the same as the resistance of the light source, and that **(ii)** the a current-carrying capacity of the bypass resistor should be twice the current-carrying capacity of the lamp. The teachings thus show that the bypass resistor is capable of carrying the current through itself, as well as all the current through the series lighting string.

4. Holler's characterization of the "**each of the resistances 6 is [...] of approximately twice the current carrying capacity [to that of the lamp]**" (Holler, 1:97-101) indicates that the bypass resistor has twice the wattage of the light source. For example, Holler's teachings suggest that a 0.5 W light source be paired with a 1.0 W bypass resistor. The twice-higher wattage of the bypass resistor elucidates that the bypass resistor is capable of carrying the current through itself, as well as all the current through the series lighting string.

5. The bypass resistors of Holler shunt the light sources, so that current flows through the bypass resistors at all times, as long as the series lighting circuit is subjected to a power supply voltage (irrespective of the status of the light source: ON or OFF, and, functioning or non-functioning). Given that current flows through the shunting bypass resistor at all times, the bypass resistor operates and conducts current at all times, that is, it operates at 100% duty cycle and, accordingly, is capable of operating at a 100% duty cycle. The teachings thus demonstrate that Holler's bypass resistor is capable of carrying the current through itself, as well as all the current through the series lighting string, including a 100% duty cycle current.

6. A POSA would be familiar with basic electrical engineering knowledge, including Ohm's law, and the following considerations: As a general principle, if one resistor is removed from a multi-resistor linear circuit, the overall resistance of the

circuit increases, and the associated current through the circuit decreases. For example, if one light source of the series lighting circuit fails (burns out), the overall resistance of the circuit increases, and the associated current through the circuit inevitably decreases. As a consequence, if one light source burns out, the current to the remaining light sources does not increase but instead slightly decreases, thereby minimizing the burn out potential of other light sources in the light string. The principle holds true for a lighting circuit that includes incandescent light sources as well as LED light sources. If an LED fails (burns out), the current to the remaining light sources does not increase but instead slightly decreases, thereby minimizing the burn out potential of other light sources in the light string.

7. Assume that a POSA would follow the teachings of Holler in regards to the numerical value of the bypass resistor ("**[...] good results are obtained if each of the resistances 6 is made of a resistance equal to that of the lamp [...].**" Holler, 1:96-101) Then, if one of the LEDs in Inoue's Fig. 3 circuit were to fail and become an open circuit, the corresponding bypass resistor would carry about twice the current, and operate at a 100% duty cycle.

8. The teachings thus demonstrate that Inoue in view of Holler discloses an apparatus in which the bypass resistor is equal to the light source ohmic resistance, is capable of carrying the current through itself, through the series lighting string, and is capable of operating at a 100% duty cycle current.

9. Inoue in view of Holler discloses an apparatus that fulfills and/or obviates the present claim requirements. An apparatus is necessarily fabricated by a fabrication method. Because the apparatus meets the claim requirements, the fabrication method necessarily includes …

- … the step of selecting a bypass resistor that has a resistance equal or greater than the predetermined resistance[20] of the LED light source,
- … the step of selecting a bypass resistor that has the ability to carry all of the current in the light string, and
- … the step of selecting a bypass resistor that has the ability to operate at 100% duty cycle.

X.K. [15b] "inserting said bypass resistor in parallel with said at least one LED light source."

1. As shown above, both the Inoue circuit and the Holler circuit include a bypass resistor that is in parallel with a light source. The light source can be either an incandescent light source (as taught by Holler) or an LED light source (as taught by Inoue). Accordingly, Inoue in view of Holler discloses an apparatus that meets the claim requirements.

2. An apparatus is necessarily fabricated by a fabrication method. Because the apparatus meets the claim requirements, the fabrication method necessarily includes …

- … the step of inserting said bypass resistor in parallel with said at least one LED light source.

[20] The predetermined resistance of the light source may coincide with the ohmic resistance of the light source. The ohmic resistance is given by by Ohm's law as $R = V / I$.

XI. Ground 3: Holler in view of Smith obviates Claims 1, 10, and 11 and 15

XI.A. Motivation to combine Holler with Smith

1. Holler relates to series lighting strings for holiday decoration. Holler states: "**This invention relates to means for lighting Christmas trees by electricity. Heretofore it has been customary to place the lamps at various desired locations on the tree and connect eight lamps rated at fifteen volts each across the usual 110 volt circuit such as is commonly employed for general lighting and power purposes.**" (Holler, 1:9-16) Holler discloses that the lamps are incandescent light bulbs that are connected in a series electrical circuit, which Holler characterizes as being an "**electric conducting loop adapted to have its terminals connected with a source of supply, said loop comprising a plurality of incandescent lamps connected in series.**" (Holler, 1:39-43)

2. Holler realizes that the series-connection of incandescent light sources pose a reliability problem: When one light bulb burns out, the entire lighting string ceases to be lit and goes dark. Holler states: "**With this arrangement, however, if one of the lamps fails the circuit through the whole light will be broken so that they all will be extinguished. It is not readily apparent which one the disabled lamp is so that considerable trouble and time in locating the lamp so that the illumination may be reestablished, are required.**" (Holler, 1:16-24) In order to overcome the problem, Holler-'847 discloses a lighting circuit in which each incandescent lamp is shunted by a bypass resistor.

3. Smith points out numerous problems of incandescent lighting. Specifically, Smith describes the disadvantages of incandescent light sources as follows: "**The primary shortcomings of the standard incandescent light bulb include the fact**

that it consumes very significant amounts of electrical power; it has a relatively short life due to frequent burnout, breakage, and the like; it dissipates a tremendous amount of heat which can burn a person's hands or otherwise injure person, pets or property. The incandescent light bulbs in use today present significant fire hazards in many uses, both from heat and from short circuits. Additionally, these bulbs have very slow switching speeds; they come in white only; and they break quite easily causing frequent replacement even for those bulbs placed in hard-to-reach areas where replacement is extremely time consuming and results in greatly increased expense." (Smith, 1:20-34, underlining added) Furthermore, Smith-'575 explains that these significant disadvantages are shared by newer, miniaturized incandescent light sources: "**While these miniature light bulbs represent a significant improvement over the standard or larger incandescent light bulbs, they are subject to the same problems although usually to a lesser extent.**" (Smith, 1:39-42)

4. Smith concludes that LED lighting systems do not suffer from the disadvantages listed above. Smith states: "**The present invention provides an improved light-emitting diode bulb assembly and various light string and wiring configurations and control circuitry therefore for solving substantially all of the problems of the prior art and providing many unique advantages thereover.**" (Smith, 2:26-32)

5. Given the strong arguments of Smith that characterize LED light sources as being superior to incandescent light sources, a POSA would be motivated to replace the obsolete, inefficient, unreliable, easily-breaking, high-heat-generating, and low-versatility incandescent light sources with modern, efficient, reliable, rugged, very-low-heat-generating, and high-versatility LED light sources.

6. Since Smith's LED light sources are driven by low voltages, such as 3.0 V, they are suitable for series lighting circuits. Furthermore, the LEDs disclosed by Smith include bi-directional LEDs, as shown in the image below. In such bi-directional LEDs, two LED chips are connected in an anti-parallel manner thereby allowing such LEDs to be driven by an AC voltage. Accordingly, the incandescent light sources of Holler can be easily replaced by the LED light sources of Smith, and a POSA would be motivated to implement such a replacement for the reasons detailed above.

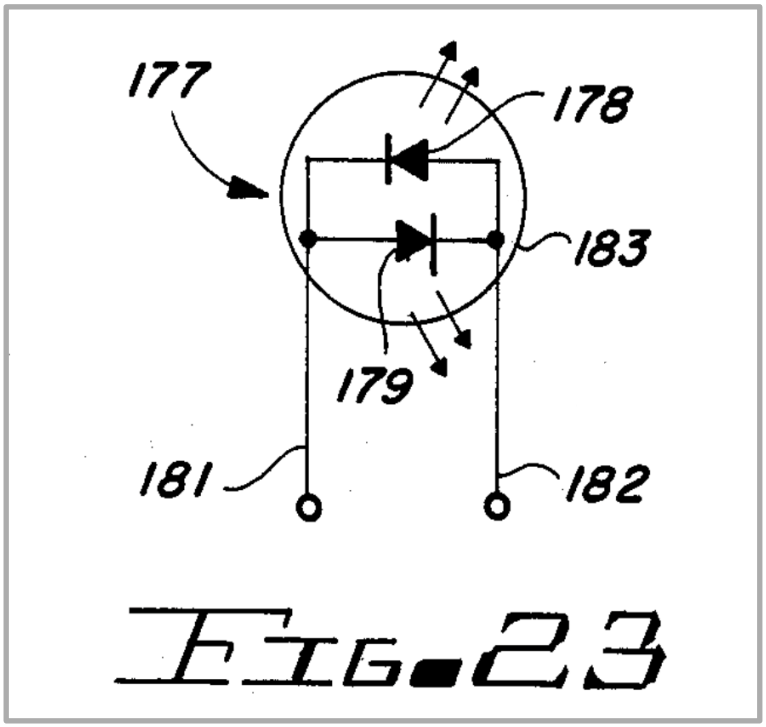

Figure caption: Smith-'575, Fig. 23, showing a bi-directional LED light source in which two LEDs are connected in an anti-parallel manner.

XI.B. [1pre] "A resistor bypass circuit for a lighting circuit comprising …"

1. Holler discloses and/or obviates the claim limitation. One embodiment of Holler has a series circuit of eight (8) lamps that are driven by the regular household line voltage of 110 V AC: "**Heretofore it has been customary to place the lamps at various desired locations on the tree and connect <u>eight lamps rated at fifteen</u>**

volts each across the usual 110 volt circuit such as is commonly employed for general lighting and power purposes." (Holler, 1:11-16, underlining added)

2. Holler also discloses a resistor bypass that shunts each of the light sources: "**To this end I propose to provide a unitary electric conducting loop adapted to have its terminals connected with a source of supply, said loop comprising a plurality of incandescent lamps connected in series and each lamp having permanently electrically connected in shunt with it and mounted upon the loop whereby the whole forms a single structure which can be connected and disconnected from the electric supply as readily as a single lamp [...].**" (Holler 1:38-43, underlining added) And: "**Fig. 3 is a view on an enlarged scale of a fragment of the lighting loop showing the manner in which each of the lamps and its resistance is mounted upon and connected in the loop;**" (Holler, 1:68-72, underlining added)

3. In addition, Holler has a pictorial disclosure of the limitation as shown in the image below. Inspection of the image reveals a series circuit with eight incandescent light sources, connected in series, each light source **5** having a socket **4** and shunt resistor **6** (bypass resistor).

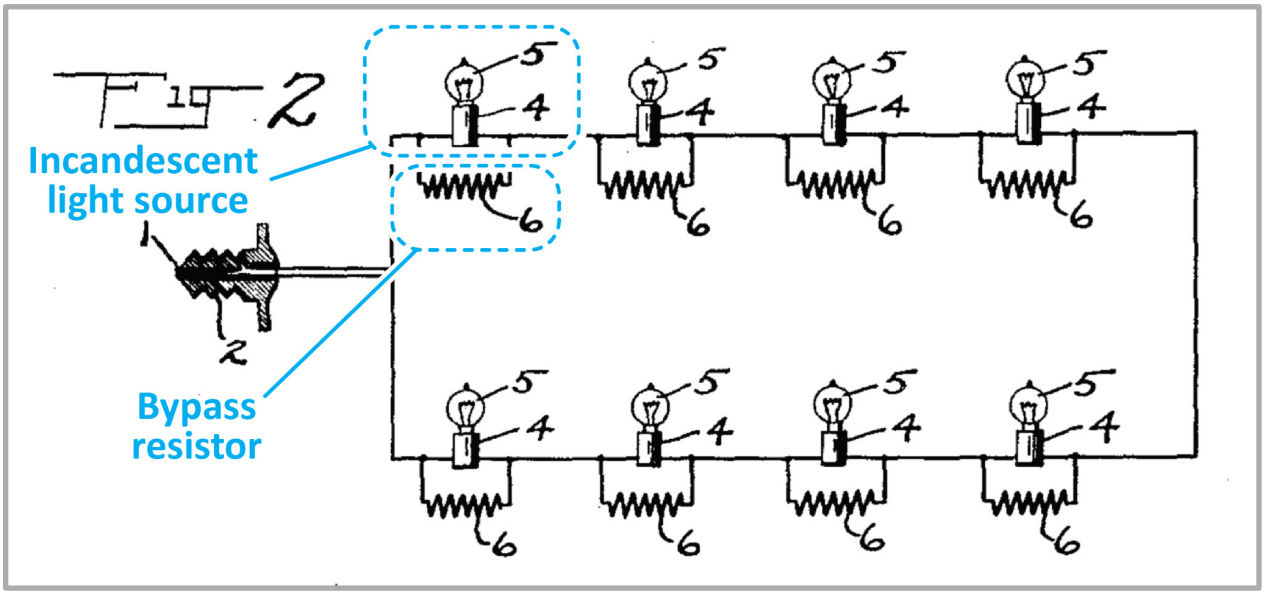

Figure caption: Holler, Fig. 2, showing incandescent light sources and associated bypass resistors (or shunts), connected in a series circuit (annotated).

XI.C. [1a] "a plurality of serially connected LED light sources and a bypass resistor being connected in parallel with at least one of the respective light sources …"

1. Holler in view of Smith discloses and/or obviates the claim limitation. Holler by itself does not disclose LED light sources. However, a POSA reading the Smith patent would become aware of the numerous advantages of LED light sources over incandescent light sources. Smith discloses the following disadvantages of incandescent light sources: High power consumption, short life, generation of heat, fire hazard, and slow switching speed: "**The primary shortcomings of the standard incandescent light bulb include the fact that it consumes very significant amounts of electrical power; it has a relatively short life due to frequent burnout, breakage, and the like; it dissipates a tremendous amount of heat which can burn a person's hands or otherwise injure person, pets or property. The incandescent light bulbs in use today present significant fire hazards in many uses, both from heat and from short circuits. Additionally, these bulbs have very slow switching speeds; they come in white only; and they break quite easily causing frequent replacement even for those bulbs placed in hard-to-reach areas where replacement is extremely time consuming and results in greatly increased expense.**" (Smith, 1:20-34, underlining added) Given that the disadvantages are numerous and significant, a POSA would be highly motivated to substitute the LED light sources of Smith for the incandescent light sources of Holler.

2. Such substitution would be simple and predictable. The LEDs disclosed by Smith can be used with AC power as well as DC power.[21] Both miniature incandescent light sources as well as LED light sources are compatible with low-voltages, such as 3.0 V to 15 V. For example, five LEDs connected in series, (each LED requiring a 3.0 V supply voltage) would be compatible with a supply voltage of 15 V. Accordingly, there would not be a "roadblock" preventing the substitution of LED light sources for incandescent light sources.

3. A fair reading of Smith reveals that the underlying spirit of Smith revolves around the replacement of incandescent light sources with LED light sources. By pointing out the many advantages of LEDs, Smith provides a compelling case for the replacement of incandescents by LEDs. Additionally, in the 2000 timeframe, the commercial market, replete with LEDs, including colored and white LEDs, was prepared for the higher demand caused by the replacement of incandescents by LEDs. A POSA reviewing Smith would agree that many advantages are to be attained when replacing incandescents with LEDs and, as a consequence, would be motivated to replace the incandescents of Holler with the LEDs of Smith.

4. Holler discloses a resistor bypass that shunts each of the light sources: "**To this end I propose [...] a plurality of incandescent lamps connected in series and each lamp having permanently electrically connected in shunt with it [...].**" (Holler, 1:38-45, underlining added)

5. Furthermore, the circuit diagram disclosed by Holler discloses a shunt (bypass resistance) connected to each of the light sources, as shown in the image below.

---

[21] Smith-'575 discloses single-direction LEDs (see Smith-'575 Figure 24) as well as bidirectional LEDs (see Smith-'575 Figure 23).

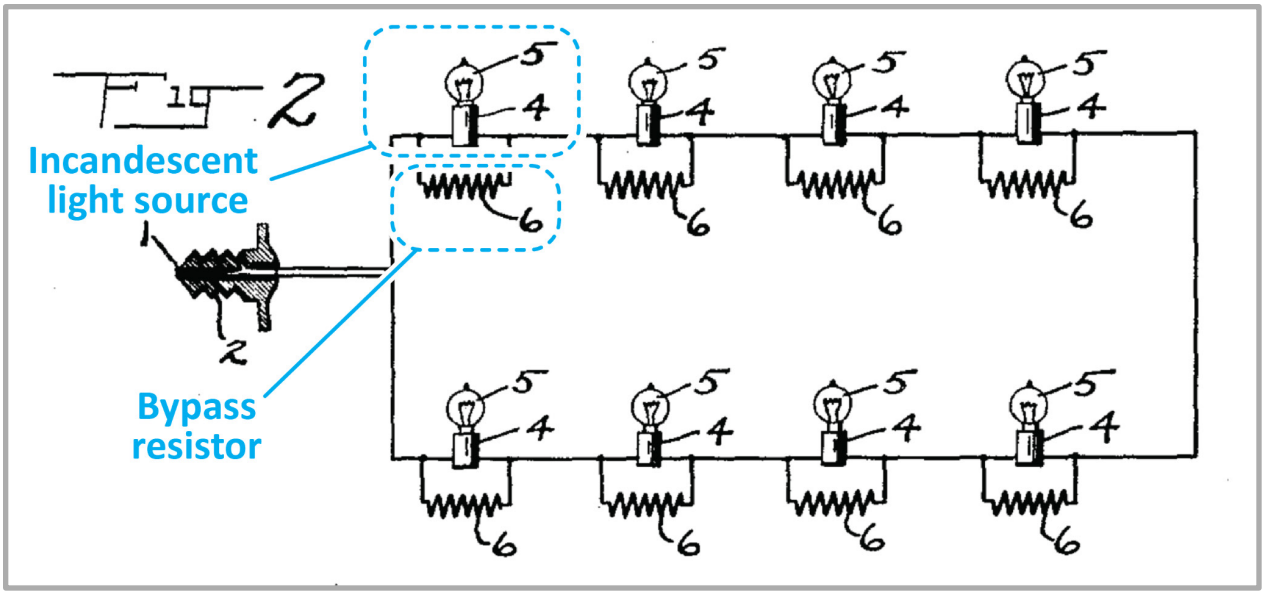

Figure caption: Holler, Fig. 2, showing incandescent light sources and associated bypass resistors (also called shunts), connected in a series circuit (annotated).

6. A POSA would understand that LED light sources have a longer life than incandescent light sources. Nevertheless, the failure of only one LED would extinguish the entire lighting circuit and thus have catastrophic consequences. Accordingly, a POSA would have the desire and be motivated to produce reliable LED lighting circuits that can accommodate a failed LED light source, even though LEDs generally have a longer life than incandescent light sources.

XI.D. [1b] "said bypass resistor being in circuit and conducting current at all times across the light sources when current is flowing through the circuit regardless of whether the LED light sources are conducting current therethrough."

1. Holler discloses and/or obviates the claim limitation. The voltage that drops across the light source, also and inevitably drops across the parallel bypass resistor

(shunt) causing, based on Ohm's law, a current through the bypass resistor. The current through the bypass resistor is given by Ohm's law:

$$I = V / R.$$

2. The current flows, even if the associated light source has failed and is an open circuit.

3. Let us assume that one of the light sources has failed (burned out).[22] In this case, the resistance of the light source is infinite so that no current is flowing through the light source and the entire current flowing through the series lighting circuit is also flowing through the bypass resistor.

4. In the case in which one lamp (out of the N lamps) has burned out, the current flowing through the bypass resistor associated with the failed light source is given by

$$I = V / ((N - 1) \times (R_{\text{LightSource}} \,||\, R_{\text{Bypass}}) + R_{\text{Bypass}}).$$ [23]

---

[22] In an incandescent lamp, the failure is commonly (or virtually always) caused by the tungsten filament burning out, that is, the tungsten filament is locally melted and evaporated so that the filament is electrically interrupted. As a result, the light source has failed to become an open circuit having infinite resistance and drawing no current. The most common failure mode of LED light sources is similar: LEDs fail by becoming an open circuit having infinite resistance so that no current is flowing through the LED light source.

[23] The notation "R1 || R2" is used to indicate that the two resistances, R1 and R2, are connected in parallel.

where $R_{\text{LightSource}}$ is the resistance of the light source, R_{Bypass} is the resistance of the bypass resistor, and ($R_{\text{LightSource}}$ || R_{Bypass}) is the resistance of a lamp, that is, the light source resistance ($R_{\text{LightSource}}$) connected in parallel to the bypass resistance (R_{Bypass}).

5. The lamp resistance (R_{Lamp}) is the resistance of two parallel resistances and can be calculated by the following equation

$$R_{\text{Lamp}}^{-1} = R_{\text{LightSource}}^{-1} + R_{\text{Bypass}}^{-1}.$$

6. The equations used above are among the most elementary equations of electrical engineering, such as Ohm's law equation, and a resistance equation for two resistors connected in parallel. A POSA would be in command of these equations since they are consistently taught in the electrical engineering curriculum.[24]

7. Based on the reasoning given above, a POSA would understand that "said bypass resistor being in circuit and conducting current at all times when current is flowing through the circuit regardless of whether the LED light sources are conducting current therethrough."

XI.E. [10pre] "A resistor bypass circuit for a lighting circuit comprising …"

1. Holler discloses and/or obviates the claim limitation. The present claim limitation is substantially similar to the [1pre] limitation, and the same reasoning expressed under the [1pre] limitation applies here as well.

---

[24] These equations are also taught in related college curricula such as applied physics, material science, and mechanical engineering.

XI.F. [10a] "a plurality of serially connected LED light sources and a bypass resistor being connected in parallel with at least one of the respective light sources …"

1. Holler in view of Smith discloses and/or obviates the claim limitation. The present claim limitation is substantially similar to the [1a] limitation, and the same reasoning expressed under the [1a] limitation applies here as well.

XI.G. [10b] "said bypass resistor connected across the at least one light sources and being in circuit and conducting current at all times when current is flowing through the circuit regardless of whether the LED light sources are conducting current therethrough …"

1. Holler in view of Smith discloses and/or obviates the claim limitation. The present claim limitation is substantially similar to the [1b] limitation, and the same reasoning expressed under the [1b] limitation applies here as well.[25]

[25] There is a slight difference in claim language between claim [1b] and [10b], in that [10b] requires that the bypass resistor is "connected across the at least one light sources." However, this requirement was already addressed in [1pre] and [1a].

XI.H. [10c] "wherein the resistance of the bypass resistor is equal to or greater than the inherent resistance of the light source to which the resistor is attached."

1. Holler discloses the claim limitation. Specifically, Holler discloses that the resistance of the bypass resistor should be the same as the resistance of the light source: "**It has been found that good results are obtained if each of the resistances 6 is made of a resistance equal to that of the lamp with which it is in shunt and of approximately twice the current carrying capacity.**" (Holler, 1:96-101, underlining added) Holler's teachings that the bypass resistors should have a resistance value that is "**equal to that of the lamp**" matches the claim limitation which encompasses the equalness of bypass resistance and lamp resistance ("bypass resistor is equal to or greater than the inherent resistance of the light source").[26]

2. A POSA would be familiar with basic electrical engineering knowledge, including Ohm's law, and the following considerations: As a general principle, if one resistor is removed from a multi-resistor linear circuit, the overall resistance of the circuit increases, and the associated current through the circuit decreases. For example, if one light source of the series lighting circuit fails (burns out), the overall resistance of the circuit increases, and the associated current through the circuit inevitably decreases. As a consequence, if one light source burns out, the current to the remaining light sources does not increase but instead slightly decreases, "thereby minimizing the burn out potential of other light sources in the light string," as required by the claim limitation. The principle holds true for a lighting circuit in

[26] Although the claim term "inherent resistance" is not defined, a POSA would be familiar with the "ohmic resistance" of a light source, such as an LED light source, whose ohmic resistance is given by Ohm's law as $R = V / I$.

which Holler's incandescent light sources are replaced by Smith's LED light sources. If an LED fails (burns out), the current to the remaining light sources does not increase but instead slightly decreases, "thereby minimizing the burn out potential of other light sources in the light string," as required by the claim limitation.

3. A "shunt" is a bypass resistor. The Merriam-Webster Dictionary defines shunt as: "**a conductor joining two points in an electrical circuit so as to form a parallel or alternative path through which a portion of the current may pass**" (https://www.merriam-webster.com/dictionary/shunt).

4. Regarding the numerical values of the bypass resistor, the following considerations are relevant, which a POSA would appreciate: Assume that a light source has a voltage, V, across it, and a current, I, flowing through it. Based on Ohm's law, the light source has an ohmic resistance of

$$R_{\text{LightSource}} = V / I .$$

5. Assume further that the bypass resistor (shunt) has a resistance of R_{Bypass}. If the bypass resistor has a smaller resistance than the light source ($R_{\text{Bypass}} < R_{\text{LightSource}}$), most of the current through the lamp[27] will pass through the bypass resistor.[28] That is, the majority of the electrical power would be consumed by the bypass resistor rather than the light source. This would be contrary to the primary purpose

---

[27] Here the term "lamp" is used to include a light source (such as an LED) and a bypass resistor that shunts the light source. Occasionally, the bypass resistor is integrated with the light source to form the lamp.

[28] An electrical current always prefers the path of least resistance. Consequently, in a parallel circuit with $R_{\text{Bypass}} < R_{\text{LightSource}}$, most of the current flows through the bypass resistor.

of the series lighting circuit, which is to emit light and not to generate heat. Accordingly, a POSA would understand that when choosing a bypass resistor meeting the condition $R_{\text{Bypass}} < R_{\text{LightSource}}$, most of the electrical power would be dissipated as heat rather than emitted as light. A POSA would understand that this is contrary to the primary purpose of the lighting string (as well as contrary to common sense) and, for this reason, a POSA would not proceed in this manner. Instead, a POSA would be motivated to make the lighting string emit light (rather than heat) and choose a bypass resistor that is equal or greater than the resistance of the light source ($R_{\text{Bypass}} \geq R_{\text{LightSource}}$). In this case, at least half of the electrical power would be used to generate light, rather than heat. A POSA would be naturally motivated to design an energy-efficient lighting string, rather than an energy-wasting lighting string. Similarly, consumers demand energy-efficient lighting strings rather than energy-wasting lighting strings. By choosing a bypass resistance equal or greater than the light source resistance, a more energy-efficient lighting string can be accomplished, consistent with the motivation of a POSA and the demands of consumers. In my opinion, a POSA would be receptive to both market forces and consumer demand, and have a preference for energy-efficient designs over an energy-wasting design.

6. Furthermore, a POSA would also understand that upon the failure of one light source, the voltage drops across the other, functioning light sources should not increase, because such increase in voltage would increase the current through the light source as well, thereby “overdriving” the light source and reducing its lifetime. It is well known that an excess current (“overcurrent”) and the resulting excess heat reduces the lifetime of a light source. Accordingly, a POSA would choose a bypass resistance value that does not increase the current to the other light sources in case a light source fails (burns out).

7. A POSA would understand that a fully functional series lighting circuit with N lamps would draw a current that is given by the equation

$$I = V / (N \times (R_{\text{LightSource}} \mid\mid R_{\text{Bypass}})).$$

where N is the number of lamps (light sources and associated bypass resistors) in the series lighting circuit, and the other symbols have their usual meaning (I = current; V = voltage). In addition, a POSA would understand that if one lamp fails, the current through the series lighting circuit will change to

$$I = V / ((N - 1) \times (R_{\text{LightSource}} \mid\mid R_{\text{Bypass}}) + R_{\text{Bypass}}).$$

8. Finally, a POSA would understand that when choosing a bypass resistance that is equal or greater than the light source resistance ($R_{\text{Bypass}} \geq R_{\text{LightSource}}$), the voltage drop across the remaining light sources would not increase upon the failure of a light source.

9. For example, if the light source resistance and the bypass resistance are equal ($R_{\text{LightSource}} = R_{\text{Bypass}} = R$), the current through a fully functional series lighting circuit is given by

$$I = V / (N \times (½\, R)).$$

10. If one lamp fails, the current through the series lighting circuit changes to

$$I = V / ((N - 1) \times (½\, R) + R) = V / ((N + 1) \times (½\, R)) .$$

11. Comparing the last two equations yields that the overall resistance increases from $N \times ½\, R$ to $(N + 1) \times ½\, R$. Because the resistance slightly increases, the current slightly decreases, including the current through each of the light sources. Accordingly, it follows from the above equations and associated reasoning that when the bypass resistance is equal to (or greater than) the light source resistance ($R_{\text{Bypass}} \geq R_{\text{LightSource}}$), the following advantages are attained: **First**, most of the

electrical power is used to drive the light source rather than the bypass resistor. That is, most of the power is used to generate light rather than heat. **Second**, upon the failure of a light source (burn out), neither the current nor the voltage across the remaining light sources would increase thereby minimizing the burn out potential of the remaining light sources in the light string.

12. The above considerations are elementary electrical engineering considerations, such as series circuit analysis, parallel circuit analysis, and Ohm's law, all of which a POSA would have command of. Furthermore, a POSA would be motivated to design a system that is efficient and reliable. Conversely, a POSA would not design a system that is inefficient and unreliable. Accordingly, the POSA would choose a bypass resistance meeting the condition $R_{\text{Bypass}} \geq R_{\text{LightSource}}$, that is, a bypass resistance equal or greater than the light source resistance.

XI.I. [11] "The resistor bypass circuit of claim 10, the light source being a semiconductor light source for providing color changing characteristics."

1. Smith discloses: "**The present invention provides a miniature light bulb apparatus or bulb construction for individual use or decorative purposes, for Christmas decorations, for light strings, for décor light strings, or strings of Christmas tree lights, and the like. The miniature light bulb construction includes a <u>light-emitting diode</u>, either mono-color, bi-color, or other multi-color operably disposed within a substantially elongated, hollow, light conducting envelope**." (Smith, 4:56-64, underlining added) That is, Smith teaches a light-emitting diode (LED) light source that can have different colors. A light-emitting diode is a semiconductor light source. The word "diode" in the phrase "light-emitting diode" refers to a pn-junction diode which includes an n-type and a p-type semiconductor.

2. Further, Smith discloses the claimed "color changing characteristics" as follows: "**Additionally, the envelope may be filled with epoxy, liquid or air and sealed; and various color combinations may be used. For example, if a red light-emitting diode portion and a green light-emitting diode portion are used, the color red, the color green, and the resulting mixture or combination color yellow may be produced by the bulb of the present system. The combinations or resulting third colors follow conventional color combination properties and will not be described in detail herein.**" (Smith, 6:25-34) Smith further explains: "**Various types of control circuits are provided for driving the light-emitting diodes or light strings to provide sufficient drive, to revive switching and the like so that a <u>wide variety of sequencing</u> including blinking, <u>alternating between two colors, sequencing between two, three or more colors</u>, sequentially stepping along a string or around a tree and the like, are possible**." (Smith, 6:55-61, underlining added)

3. To conclude, Smith discloses the claimed "semiconductor light source" as well as the claimed "color changing characteristics." Accordingly, the combination of Holler in view of Smith obviates the claim.

XI.J. [15pre] "A method of bypassing an LED light source, having a predetermined resistance to current flow, in a serially connected LED light string having at least one light source, the method comprising …"

1. Holler in view of Smith discloses the claim limitation. As discussed under Claim limitation [1pre] and [1a], Holler in view of Smith discloses an apparatus that includes and/or obviates the features recited in the present claim.

2. An apparatus is necessarily fabricated by a fabrication method. Because the apparatus meets the claim requirements, the fabrication method necessarily includes …

- … the step of serially connecting LED light sources,
- … the step of determining the resistance values of the bypass resistors, and
- … the step of connecting the bypass resistors to the LEDs.

XI.K. [15a] "the steps of selecting a bypass resistor with the following characteristics: a resistance greater than or equal to the predetermined resistance of said LED light source; the ability to carry all of the current in the light string; and the ability to operate at 100% duty cycle …"

1. Holler in view of Smith discloses an apparatus that meets the claim requirements.

2. Holler discloses that the bypass resistor has a resistance that is equal to or greater than the ohmic resistance of the light source. Specifically, Holler discloses that the resistance of the bypass resistor should be the same as the resistance of the light source: "**It has been found that good results are obtained if each of the <u>resistances 6 is made of a resistance equal to that of the lamp</u> with which it is in shunt and of approximately twice the current carrying capacity.**" (Holler, 1:96-101, underlining added) Holler's teachings that the bypass resistors should have a resistance value that is "**equal to that of the lamp**" matches the claim limitation which encompasses the equalness of bypass resistance and lamp resistance

("a resistance greater than or equal to the predetermined resistance of said LED light source").[29]

3. Furthermore, Holler discloses: "**It has been found that good results are obtained if each of the resistances 6 is made of a resistance equal to that of the lamp with which it is in shunt and of approximately twice the current carrying capacity.**" (Holler, 1:96-101, underlining added) That is, Holler teaches that **(i)** the resistance of the bypass resistor (or shunt) should be the same as the resistance of the light source, and that **(ii)** the a current-carrying capacity of the bypass resistor should be twice the current-carrying capacity of the lamp. The teachings thus show that the bypass resistor is capable of carrying the current through itself, as well as all the current through the series lighting string.

4. Holler's characterization of the "**each of the resistances 6 is [...] of approximately twice the current carrying capacity [to that of the lamp]**" (Holler, 1:97-101) indicates that the bypass resistor has twice the wattage of the light source. For example, Holler's teachings suggest that a 0.5 W light source be paired with a 1.0 W bypass resistor. The twice-higher wattage of the bypass resistor elucidates that the bypass resistor is capable of carrying the current through itself, as well as all the current through the series lighting string.

5. The bypass resistors of Holler shunt the light sources, so that current flows through the bypass resistors at all times, as long as the series lighting circuit is subjected to a power supply voltage (irrespective of the status of the light source: ON or OFF, and, functioning or non-functioning). Given that current flows through

---

[29] Although the claim term "inherent resistance" is not defined, a POSA would be familiar with the "ohmic resistance" of a light source, such as an LED light source, whose ohmic resistance is given by Ohm's law as $R = V / I$.

the shunting bypass resistor at all times, the bypass resistor operates and conducts current at all times, that is, it operates at 100% duty cycle and, accordingly, is capable of operating at a 100% duty cycle. The teachings thus demonstrate that Holler's bypass resistor is capable of carrying the current through itself, as well as all the current through the series lighting string, including a 100% duty cycle current.

6. A POSA would be familiar with basic electrical engineering knowledge, including Ohm's law, and the following considerations: As a general principle, if one resistor is removed from a multi-resistor linear circuit, the overall resistance of the circuit increases, and the associated current through the circuit decreases. For example, if one light source of the series lighting circuit fails (burns out), the overall resistance of the circuit increases, and the associated current through the circuit inevitably decreases. As a consequence, if one light source burns out, the current to the remaining light sources does not increase but instead slightly decreases, thereby minimizing the burn out potential of other light sources in the light string. The principle holds true for a lighting circuit that includes incandescent light sources as well as LED light sources. If an LED fails (burns out), the current to the remaining light sources does not increase but instead slightly decreases, thereby minimizing the burn out potential of other light sources in the light string.

7. The teachings thus demonstrate that Holler in view of Smith discloses an apparatus in which the bypass resistor is equal to the light source ohmic resistance, is capable of carrying the current through itself, as well as all the current through the series lighting string, and is capable of operating at a 100% duty cycle current.

8. Holler in view of Smith discloses an apparatus that fulfills and/or obviates the present claim requirements. An apparatus is necessarily fabricated by a fabrication

method. Because the apparatus meets the claim requirements, the fabrication method necessarily includes …

- … the step of selecting a bypass resistor that has a resistance equal or greater than the predetermined resistance[30] of the LED light source,
- … the step of selecting a bypass resistor that has the ability to carry all of the current in the light string, and
- … the step of selecting a bypass resistor that has the ability to operate at 100% duty cycle.

XI.L. [15b] "inserting said bypass resistor in parallel with said at least one LED light source."

1. As shown above, the Holler circuit includes a bypass resistor that is in parallel with a light source. The light source can be either an incandescent light source (as taught by Holler) or an LED light source (as taught by Smith). Accordingly, Holler in view of Smith discloses an apparatus that meets the claim requirements.

2. An apparatus is necessarily fabricated by a fabrication method. Because the apparatus meets the claim requirements, the fabrication method necessarily includes …

- … the step of inserting said bypass resistor in parallel with said at least one LED light source.

---

[30] The predetermined resistance of the light source may coincide with the ohmic resistance of the light source. The ohmic resistance is given by by Ohm's law as $R = V / I$.

XII. Ground 4: Fisherman in view of Callahan obviates Claims 1, 2, 4, 8, 10 and 15

XII.A. Motivation to combine Fisherman and Callahan

1. Fisherman discloses a series lighting circuit that includes incandescent lamps that are connected in series and bypass resistors, with each bypass resistor shunting one of the incandescent lamps. Fisherman is limited to incandescent light sources and does not disclose LED light sources.

2. Callahan offers the following advantageous features. **First**, Callahan discloses the employment of LED light sources which have advantages over incandescent light sources, specifically "**improved power conservation and reliability.**" (Callahan, 1:28) **Second**, Callahan offers greater control over the light sources, specifically over "**color, blink rate, brightness, etc.**" (Callahan, 4:6)

3. A POSA would be motivated to implement Fisherman's series lighting circuit, including the bypass resistors, by using Callahan's LEDlight sources, thereby conserving electrical power, attaining greater reliability, and attaining a higher degree of lighting control that includes color, brightness, and blink rate.

4. The combination would be a predictable combination of elements disclosed in the prior art. Both Fisherman and Callahan disclose series lighting circuits. Both Fisherman and Callahan use light sources that require voltages of only a few volts (such as 3.0 V). Both Fisherman and Callahan disclose predictable and combinable electrical circuits whose functionality can be determined a priori. A POSA would be motivated to take advantage of Callahan's LED light sources when implementing the Fisherman lighting circuit.

XII.B. [1pre] "A resistor bypass circuit for a lighting circuit comprising …"

1. Fisherman discloses the claim limitation. Fisherman states: "**Christmas tree lights consist usually of small lamps which are interconnected in series.**" (Fisherman, 1:19-20). Fisherman also states: "**In the construction shown in Figure 1, a plurality of the lamps 10 are <u>interconnected in series</u> and are supplied with electrical energy from a source through the wires 14 and 15.**" (Fisherman, 2:14-17, underlining added). Fisherman's Figure 1, shown below, displays multiple incandescent light sources connected in a series lighting circuit.

2. Fisherman discloses bypass resistances that shunt the incandescent light sources "**A <u>resistance 13</u> which may consist of 25 to 50 ohms is <u>connected in parallel with the lamp 10</u> and in actual construction may constitute a part of the lamp.**" (Fisherman, 2:11-14, underlining added) Fisherman further states: "**The resistances 13 are so dimensioned that when the system functions normally, the electrical current will flow through the filaments 11 of the lamps 10, so that all the lamps 10 will be illuminated.**" (Fisherman, 2:18-21)

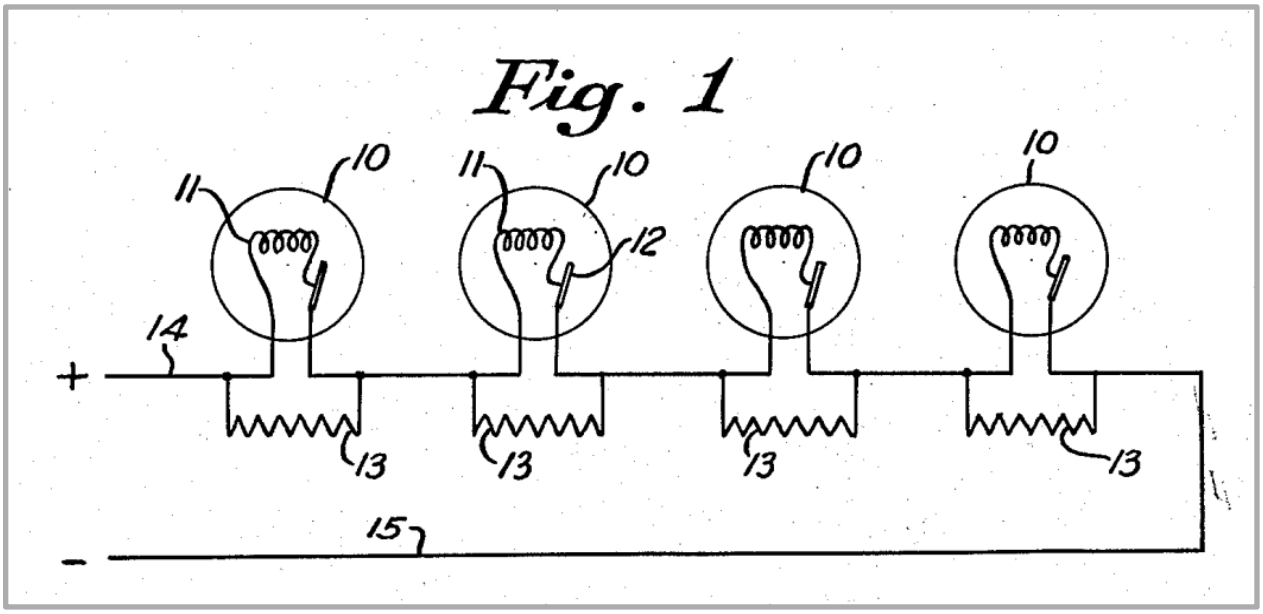

Figure caption: Fisherman, Fig. 1, showing a series lighting circuit that includes incandescent lamps 10 and bypass resistors 13.

XII.C. [1a] "a plurality of serially connected LED light sources and a bypass resistor being connected in parallel with at least one of the respective light sources …"

1. Fisherman in view of Callahan discloses and/or obviates the claim limitation. Fisherman states: "**Christmas tree lights consist usually of small lamps which are interconnected in series.**" (Fisherman, 1:19-20). Fisherman also states: "**In the construction shown in Figure 1, a plurality of the lamps 10 are interconnected in series and are supplied with electrical energy from a source through the wires 14 and 15.**" (Fisherman, 2:14-17, underlining added). Fisherman's Figure 1, shown below, displays multiple incandescent light sources connected in a series lighting circuit.

2. Fisherman discloses bypass resistances that shunt the incandescent light sources "**A resistance 13 which may consist of 25 to 50 ohms is connected in parallel with the lamp 10 and in actual construction may constitute a part of the lamp.**" (Fisherman, 2:11-14, underlining added) Fisherman further states: "**The resistances 13 are so dimensioned that when the system functions normally, the electrical current will flow through the filaments 11 of the lamps 10, so that all the lamps 10 will be illuminated.**" (Fisherman, 2:18-21)

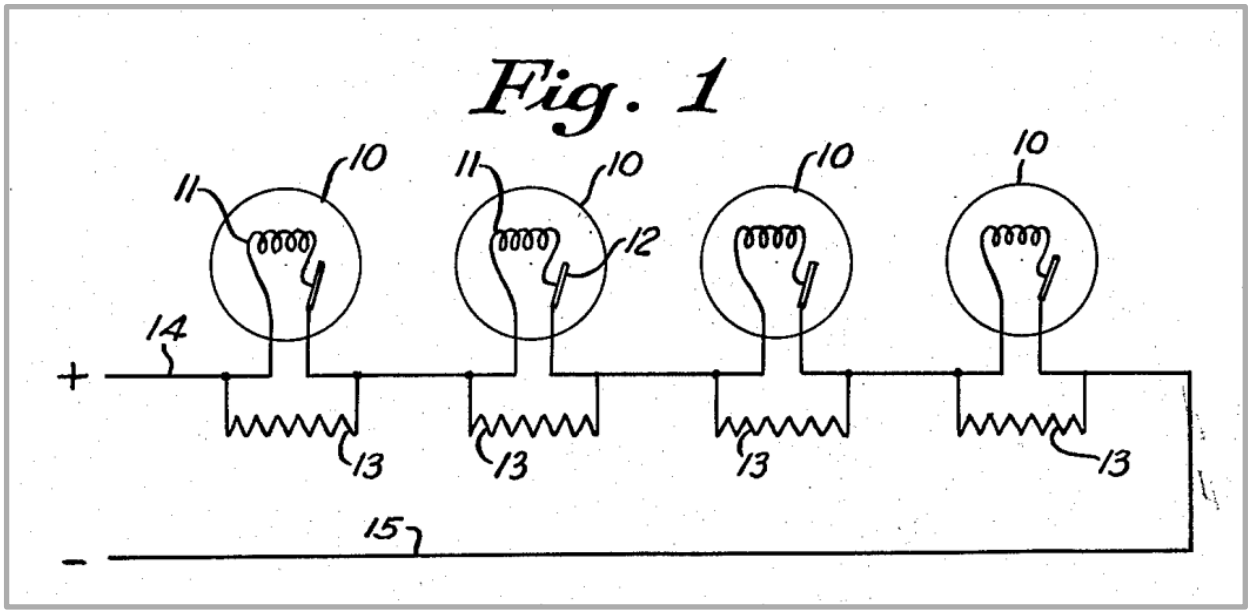

Figure caption: Fisherman, Fig. 1, showing a series lighting circuit that includes incandescent lamps 10 and bypass resistors 13.

3. However, Fisherman, published in 1956, does not disclose LED light sources. In view of Callahan, the usage of LEDs as light sources would be obvious due to the advantages of LED light sources over incandescent light sources: **First**, Callahan discloses that the employment of LED light sources results in "**improved power conservation and reliability.**" (Callahan, 1:28) **Second**, Callahan offers greater control over the light sources, specifically over "**color, blink rate, brightness, etc.**" (Callahan, 4:6) A POSA would be motivated to replace the incandescent light sources of Fisherman with the LED light sources of Callahan. Such replacement would be straightforward and predictable, as discussed above (see the "Motivation to combine Fisherman with Callahan" Section).

XII.D. [1b] "said bypass resistor being in circuit and conducting current at all times across the light sources when current is flowing through the circuit regardless of whether the LED light sources are conducting current therethrough."

1. Fisherman in view of Callahan discloses and/or obviates the claim limitation. The claim limitation ensures that current is flowing through the bypass resistor when current is flowing through the LED light source, as well as when no current is flowing through the LED light source. If one of Fisherman's incandescent light sources is defective or OFF (due to an open bimetallic switch), the current flow through it becomes zero. However, a POSA would realize that the current would continue flowing through the bypass resistor.

2. Furthermore, Fisherman discloses: "**The resistances 13 are so dimensioned that when the system functions normally, the electrical current will flow through the filaments 11 of the lamps 10, so that all the lamps 10 will be illuminated.**" (Fisherman, 2:18-21) Fisherman also discloses: "**The size of the resistance is such that normally a substantial quantity of the electrical current flows through the lamp filament, so that the lamp is lit. When the bimetallic strip is moved away from the filament due to overheating, <u>the current will then flow through the shunt resistance so that the remaining Christmas tree lamps will continue to light. Thus the electrical circuit will not be interrupted</u>.**" (Fisherman, 1:41-48, underlining added)

3. The voltage that drops across the LED light source, also and inevitably drops across the parallel bypass resistor (shunt) causing, based on Ohm's law, a current through the bypass resistor. The current through the bypass resistor is given by Ohm's law:

$$I = V / R.$$

4. The current flows, even if the associated light source has failed and is an open circuit.

5. Let us assume that one of the light sources has failed (burned out).[31] In this case, the resistance of the light source is infinite so that no current is flowing through the light source and the entire current flowing through the series lighting circuit is also flowing through the bypass resistor.

6. In case in which one lamp (out of the *N* lamps) has burned out, the current flowing through the bypass resistor associated with the failed light source is given by

$$I = V / ((N - 1) \times (R_{\text{LightSource}} \,||\, R_{\text{Bypass}}) + R_{\text{Bypass}}).$$ [32]

where $R_{\text{LightSource}}$ is the resistance of the light source, R_{Bypass} is the resistance of the bypass resistor, and ($R_{\text{LightSource}} \,||\, R_{\text{Bypass}}$) is the resistance of a lamp, that is, the light source resistance ($R_{\text{LightSource}}$) connected in parallel to the bypass resistance (R_{Bypass}).

---

[31] In an incandescent lamp, the failure is commonly (or virtually always) caused by the tungsten filament burning out, that is, the tungsten filament is locally melted and evaporated so that the filament is electrically interrupted. As a result, the light source has failed to become an open circuit having infinite resistance and drawing no current. The most common failure mode of LED light sources is similar: LEDs fail by becoming an open circuit having infinite resistance so that no current is flowing through the LED light source.

[32] The notation "R1 || R2" is used to indicate that the two resistances, R1 and R2, are connected in parallel.

7. The lamp resistance (R_{Lamp}) is the resistance of two parallel resistances and can be calculated by the following equation

$$R_{Lamp}^{-1} = R_{LightSource}^{-1} + R_{Bypass}^{-1}.$$

8. The equations used above are among the most elementary equations of electrical engineering, such as Ohm's law equation, and a resistance equation for two resistors connected in parallel. A POSA would be in command of these equations since they are consistently taught in the electrical engineering curriculum.[33]

9. Based on the reasoning given above, a POSA would conclude that "said bypass resistor being in circuit and conducting current at all times when current is flowing through the circuit regardless of whether the LED light sources are conducting current therethrough." (claim limitation [1b])

XII.E. [2] "The resistor bypass circuit of claim 1, where the circuit is series-parallel connected."

1. Fisherman in view of Callahan discloses and/or obviates the claim. Fisherman states: "**In the construction shown in Figure 1, a plurality of the lamps 10 are interconnected in series and are supplied with electrical energy from a source through the wires 14 and 15.**" (Fisherman, 2:14-17, underlining added). Fisherman also states: "**A resistance 13 which may consist of 25 to 50 ohms is connected in parallel with the lamp 10 and in actual construction may constitute a part of the lamp.**" (Fisherman, 2:11-14, underlining added) Accordingly, the Fisherman series lighting circuit is a circuit that is series-parallel connected.

---

[33] These equations are also taught in related college curricula such as applied physics, material science, and mechanical engineering.

2. Inspection of Fisherman's circuit diagram, shown in Figure 1 (reproduced below) reveals that light sources (**10**) are connected in parallel with a bypass resistor (**13**). Inspection of Fisherman's circuit diagram also reveals that the groups of the parallelly connected circuit elements (light source **10**, and bypass resistor **13**) are connected in series. Accordingly, the Fisherman circuit diagram shows a circuit that is series-parallel connected.

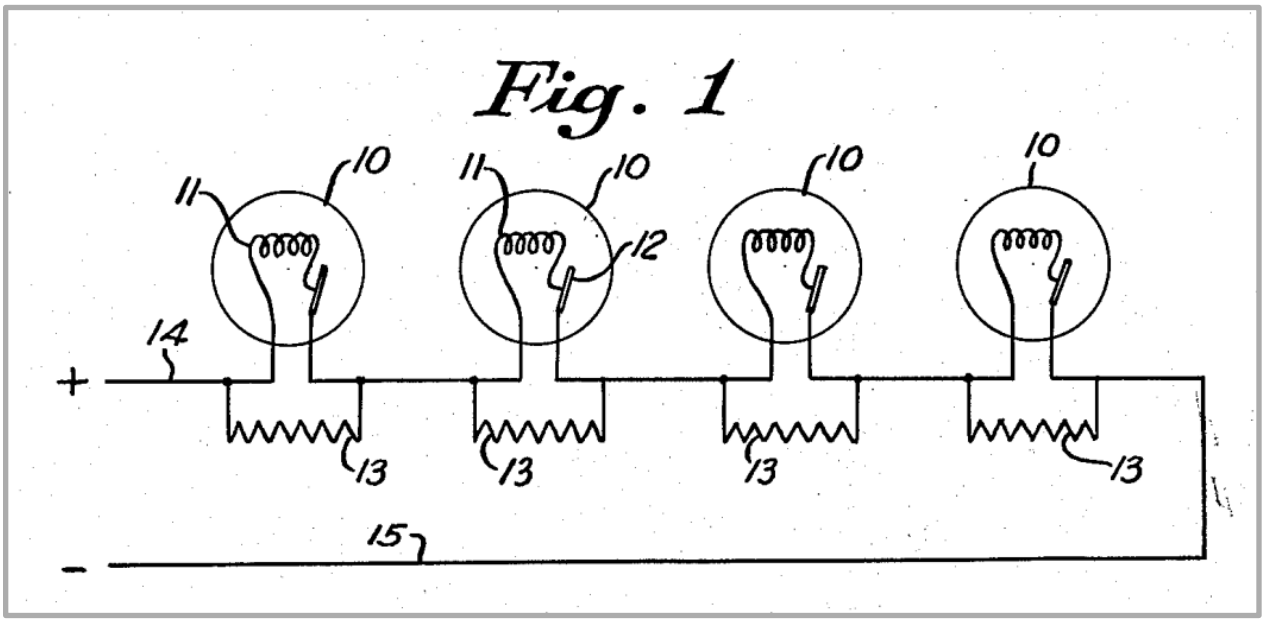

Figure caption: Fisherman, Fig. 1, showing a series lighting circuit that includes incandescent lamps 10 and bypass resistors 13.

XII.F. [4] "The resistor bypass circuit of claim 1, wherein the LED light source uses 0.20 watts or less."

1. Fisherman in view of Callahan discloses and/or obviates the claim. Standard LEDs, including those disclosed by Callahan, frequently referred to as 5 mm LEDs, have a standard drive current of 20 mA. Given that the drive voltage of LEDs (red, green, blue, and white) varies between 2.0 and 3.5 V, yields a power of less than 100 mW, which meets the claim requirement of "0.2 watts or less."

2. Fisherman discloses incandescent light sources that are driven by 8.0 V and consume a current of ¼ A ("**... lamps 10 which are all of the same construction,**

namely, they are 8 volt, ¼ ampere lamps …" Fisherman, 2:7-8). Accordingly, their power consumption is 2.0 W. Given that LEDs consume only about 1/10 of the power of an incandescent lamp,[34] the LED power consumed is estimated to be 2.0 W / 10 = 0.2 W, thereby meeting the claim requirement of "0.2 watts or less."

XII.G. [8] "The resistor bypass circuit of claim 1 being utilized in AC or DC circuits powered form a power source selected from the list consisting of batteries, step down transformers, AC utility power, or converters from AC to DC or DC to AC power, pulsed DC, and filtered or unfiltered DC, or partially filtered AC."

1. Fisherman in view of Callahan discloses and/or obviates the claim. Upon reading the disclosure of Fisherman, a POSA would understand that Fisherman's series lighting circuits ("**electrical Christmas tree lamps**") can be driven by standard AC household line voltage (such as 120 V AC) frequently referred to as "AC utility power," as claimed. Furthermore, inspection of Fisherman's Figure 1 reveals that the power supply lines are marked with a "**+**" and "**–**" sign, indicating that a DC voltage is equally suited to drive the series lighting circuit. The DC voltage may be referred to as "filtered or unfiltered DC," as claimed.

---

[34] It is well known that LED light sources consume much less power than incandescent light sources. Callahan points out that LEDs possess "**improved power conservation and reliability.**" (Callahan, 1:28) Smith points out that LEDs have an "**extremely low energy consumption which is normally at least <u>1/10 of that of the conventional miniature incandescent Christmas tree bulbs</u>**." (Smith, 3:32-35, underlining added)

2. Callahan discloses "**DC Voltage regulator configured to accommodate AC power sources 88.**" (Callahan, 6:48-49) The AC and DC power sources of Callahan may be referred to as "AC utility power," "partially filtered AC," or "filtered or unfiltered DC," as claimed. Accordingly the claim is disclosed and/or obviated.

XII.H. [10pre] "A resistor bypass circuit for a lighting circuit comprising …"

1. Fisherman in view of Callahan discloses and/or obviates the claim limitation. The present claim limitation is substantially similar to the [1pre] limitation, and the same reasoning expressed under the [1pre] limitation applies here as well.

XII.I. [10a] "a plurality of serially connected LED light sources and a bypass resistor being connected in parallel with at least one of the respective light sources …"

1. Fisherman in view of Callahan discloses and/or obviates the claim limitation. The present claim limitation is substantially similar to the [1a] limitation, and the same reasoning expressed under the [1a] limitation applies here as well.

XII.J. [10b] "said bypass resistor connected across the at least one light sources and being in circuit and conducting current at all times when current is flowing through the circuit regardless of whether the LED light sources are conducting current therethrough …"

1. Fisherman in view of Callahan discloses and/or obviates the claim limitation. The present claim limitation is substantially similar to the [1b] limitation, and the same reasoning expressed under the [1b] limitation applies here as well.[35]

XII.K. [10c] "wherein the resistance of the bypass resistor is equal to or greater than the inherent resistance of the light source to which the resistor is attached."

1. Fisherman in view of Callahan discloses and/or obviates the claim limitation. Fisherman discloses an incandescent light source that is driven by 8 V and ¼ A ("**… lamps 10 which are all of the same construction, namely, they are 8 volt, ¼ ampere lamps …**" Fisherman, 2:7-8). Based on Ohm's law, the resistance of the incandescent light source is $R = V / I$ = 8.0 V / ¼ A = 32 Ω (32 ohm). Furthermore, Fisherman discloses a bypass resistor having a resistance of 25 to 50 Ω (25 to 50 ohm) ("**A resistance 13 which may consist of <u>25 to 50 ohms</u> is connected in parallel with the lamp 10 and in actual construction may constitute a part of the lamp.**" Fisherman, 2:11-14, underlining added). Comparison of Fisherman's light source resistance (32 Ω) with Fisherman's bypass resistance (25 to 50 Ω) yields that

---

[35] There is a slight difference in claim language between claim [1b] and [10b], in that [10b] requires that the bypass resistor is "connected across the at least one light sources." However, this requirement was already addressed in [1pre] and [1a].

Fisherman's resistances are consistent and meet the claim requirement ("resistance of the bypass resistor is equal to or greater than the inherent resistance of the light source"). For example, a bypass resistance of 40 Ω ("**25 to 50 ohms**") is greater than the resistance of 32 Ω ("**8 volt, ¼ ampere lamps**").

2. Furthermore, a POSA would be familiar with basic electrical engineering knowledge, including Ohm's law, and the following considerations: As a general principle, if one resistor is removed from a multi-resistor linear circuit, the overall resistance of the circuit increases, and the associated current through the circuit decreases. For example, if one light source of the series lighting circuit fails (burns out), the overall resistance of the circuit increases, and the associated current through the circuit inevitably decreases. As a consequence, if one light source burns out, the current to the remaining light sources does not increase but instead slightly decreases, "thereby minimizing the burn out potential of other light sources in the light string," as required by the claim limitation. The principle holds true for a lighting circuit in which Fisherman's incandescent light sources are replaced by Callahan's LED light sources. If an LED fails (burns out), the current to the remaining light sources does not increase but instead slightly decreases, "thereby minimizing the burn out potential of other light sources in the light string," as required by the claim limitation. Quantitative examples relating to the present claim limitation may be found in the Holler-in-view-of-Smith Ground and will not be repeated here.

XII.L. [15pre] "A method of bypassing an LED light source, having a predetermined resistance to current flow, in a serially connected LED light string having at least one light source, the method comprising …"

1. Fisherman in view of Callahan discloses the claim limitation. As discussed under Claim limitation [1pre] and [1a], Fisherman discloses an apparatus that includes and/or obviates the features recited in the present claim.

2. An apparatus is necessarily fabricated by a fabrication method. Because the apparatus meets the claim requirements, the fabrication method necessarily includes …

- … the step of serially connecting LED light sources,
- … the step of determining the resistance values of the bypass resistors, and
- … the step of connecting the bypass resistors to the LEDs.

XII.M. [15a] "the steps of selecting a bypass resistor with the following characteristics: a resistance greater than or equal to the predetermined resistance of said LED light source; the ability to carry all of the current in the light string; and the ability to operate at 100% duty cycle …"

1. Fisherman in view of Callahan discloses and/or obviates the claim limitation. Fisherman discloses an incandescent light source that is driven by 8 V and ¼ A ("**… lamps 10 which are all of the same construction, namely, they are 8 volt, ¼ ampere lamps …**" Fisherman, 2:7-8). Based on Ohm's law, the resistance of the incandescent light source is $R = V / I$ = 8.0 V / ¼ A = 32 Ω (32 ohm). Furthermore,

Fisherman discloses a bypass resistor having a resistance of 25 to 50 Ω (25 to 50 ohm) ("**A resistance 13 which may consist of <u>25 to 50 ohms</u> is connected in parallel with the lamp 10 and in actual construction may constitute a part of the lamp.**" Fisherman, 2:11-14, underlining added). Comparison of Fisherman's light source resistance (32 Ω) with Fisherman's bypass resistance (25 to 50 Ω) yields that Fisherman's resistances are consistent and meet the claim requirement ("resistance of the bypass resistor is equal to or greater than the inherent resistance of the light source"). For example, a bypass resistance of 40 Ω ("**25 to 50 ohms**") is greater than the resistance of 32 Ω ("**8 volt, ¼ ampere lamps**").

2. Fisherman's bypass resistor is capable of carrying the current through itself. Furthermore, since Fisherman's lamps are connected to a flasher (bimetallic strip switch), the associated shunt (bypass resistor) carries all the current of the light string during the times that the associated lamp is in the OFF state. The teachings thus show that the bypass resistor is capable of carrying the current through itself, as well as all the current through the series lighting string.

3. Fisherman in view of Callahan discloses and/or obviates the claim limitation. As discussed above, the bypass resistors of Fisherman shunt the light sources, so that current flows through the bypass resistors at **all times**, as long as the series lighting circuit is subjected to a power supply voltage (irrespective of the status of the light source: ON or OFF, and, functioning or non-functioning). Given that current flows through the shunting bypass resistor at **all times**, the bypass resistor operates and conducts current at **all times**, that is, it operates at 100% duty cycle and, accordingly, is capable of operating at a 100% duty cycle.

4. The teachings thus demonstrate that Fisherman in view of Callahan discloses an apparatus in which the bypass resistor is equal to or greater than the light source ohmic resistance, is capable of carrying the current through itself, as well as all the

current through the series lighting string, and is capable of operating at a 100% duty cycle current.

5. Fisherman in view of Callahan discloses an apparatus that fulfills and/or obviates the present claim requirements. An apparatus is necessarily fabricated by a fabrication method. Because the apparatus meets the claim requirements, the fabrication method necessarily includes …

- … the step of selecting a bypass resistor that has a resistance equal or greater than the predetermined resistance[36] of the LED light source,
- … the step of selecting a bypass resistor that has the ability to carry all of the current in the light string, and
- … the step of selecting a bypass resistor that has the ability to operate at 100% duty cycle.

XII.N. [15b] "inserting said bypass resistor in parallel with said at least one LED light source."

1. As shown above, the Fisherman circuit includes a bypass resistor that is in parallel with a light source. The light source can be either an incandescent light source (as taught by Fisherman) or an LED light source (as taught by Callahan). Accordingly, Fisherman in view of Callahan discloses an apparatus that meets the claim requirements.

---

[36] The predetermined resistance of the light source may coincide with the ohmic resistance of the light source. The ohmic resistance is given by by Ohm's law as $R = V / I$.

2. An apparatus is necessarily fabricated by a fabrication method. Because the apparatus meets the claim requirements, the fabrication method necessarily includes …

- … the step of inserting said bypass resistor in parallel with said at least one LED light source.

XIII. Ground 5: Inoue in view of Smith obviates Claims 2, 3, 4, 5, 6, 8 and 9

XIII.A. Motivation to combine Inoue with Smith

1. Inoue discloses a series lighting circuit employing LEDs, with the circuit including multiple LEDs and multiple bypass resistors. Inoue discloses: "**[0011] According to the present invention, a lighting device that allows a plurality of serially-connected light sources to light up, includes: current setting sections that are connected in series to the light sources respectively to constitute serial circuits and set a forward current value flowing through the light sources; and shunt sections that are connected in parallel to at least one of the serial circuits constituted by the current setting sections and light sources and shunt current when a voltage higher than rated voltages of the light sources is applied to the serial circuits.**" (Inoue, [0011], underlining added)

2. However, Inoue has limited disclosures of series lighting circuits with advanced LED control, such as LED series lighting circuits that are capable of blinking, twinkling, and changing color in a dynamic manner. Smith, in addition to disclosing the substantial advantages of LED light sources over incandescent light sources, discloses advanced capabilities of LEDs that include the capability for advanced color and temporal control of the LED light sources. Specifically, Smith

discloses: "**The light-emitting diodes may be adapted for use as Christmas tree strings and various AC and DC control circuits are provided for driving the light-emitting diodes, for blinking effects, for alternating between two colors, for alternating between three colors, for improving the length of the string and uniformity of intensity of illumination and the like.**" (Inoue, Abstract, underlining added)

3. A POSA would be motivated to add the advanced functionality of Smith into the lighting circuits of Inoue. Combining the two prior-art references in this regard would combine known concepts that are predictable. A POSA would be familiar with the design of basic electrical circuits and understand that such electrical circuits work in a predictable manner. That is, implementing an electrical circuit according to a circuit diagram having an intended function (such as a color-changing function, blinking function, flashing function[37], twinking function,[38] or fading function[39]), will in fact yield the desired function. To summarize, the combination of Inoue with Smith would broaden the capabilities of the LED lighting circuits disclosed by Inoue to include the advanced LED functionalities of Smith.

---

[37] The terms "flashing effect" and "blinking effect" may be used interchangeably. The '794 patent does not attribute a specific difference to these effects and instead refers to "**a blinking or flashing effect**" ('794 patent, 9:55-56)

[38] The terms "twinkling effect," "flashing effect," and "blinking effect" may be used interchangeably. The '794 patent does not attribute a specific difference to these effects and instead refers to "**a blinking or flashing effect**" ('794 patent, 9:55-56) as well as "**flasher or twinkle bulbs.**" ('794 patent, 1:48)

[39] A "fading function" indicates that transitions from one state to another state occur in a smooth manner rather than an abrupt manner.

XIII.B. [2] "The resistor bypass circuit of claim 1, where the circuit is series-parallel connected."

1. Inoue discloses the claim. Claim 1 of the '794 patent is anticipated and/or obviated by Inoue alone (as discussed in Ground 1), or by Inoue in view of Holler (as discussed in Ground 2).

2. Inspection of Inoue's Fig. 3 reveals that the circuit includes both serial as well as parallel circuit components. The LED1 and LED2 are connected in a serial manner. Additionally, each LED is connected in parallel with a bypass resistor (R12 and R13).

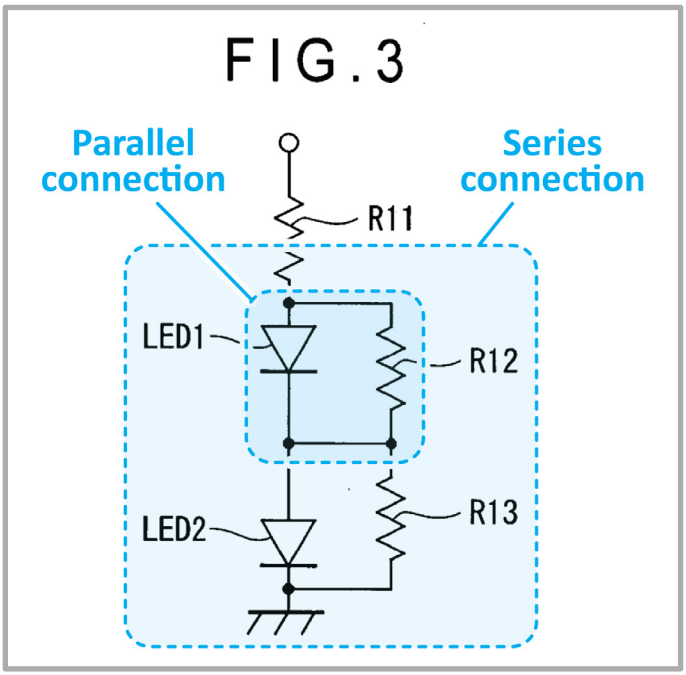

Figure caption: Inoue, Fig. 3, showing two LEDs (LED1 and LED2) in a series circuit, with each LED being shunted by a parallel bypass resistor (R12 and R13) (annotated).

3. Inoue discloses a series connected LED light source, with each light source shunted by a bypass resistor: "**[0011] According to the present invention, a lighting device that allows a plurality of <u>serially-connected light sources</u> to light up, includes: current setting sections that are connected in series to the light sources**

respectively to constitute serial circuits and set a forward current value flowing through the light sources; and shunt sections that are connected in parallel to at least one of the serial circuits constituted by the current setting sections and light sources and shunt current when a voltage higher than rated voltages of the light sources is applied to the serial circuits." (Inoue, [0011], underlining added).

4. Inoue also discloses: "**[0008] In order to cope with this problem, it can be considered that a circuit configuration as shown in FIG. 3 in which the LEDs 1 and 2 are serially connected is employed to individually set the luminance levels of the LEDs 1 and 2. That is, as shown in FIG. 3, the resistors R12 and R13 are connected to the serially-connected LEDs 1 and 2, respectively in parallel. Resistance values of the resistors R12 and R13 are set to shunt current appropriately.**" (Inoue, [0008], underlining added)

XIII.C. [3] "The resistor bypass circuit of claim 1 wherein at least one of the light sources is a semiconductor providing a twinkling effect, and wherein the semiconductor light source utilizes electronic circuits that control the flashing rate of the light source."

1. As a preliminary remark, I note that the terms "blinking effect," "twinkling effect," and "flashing effect" may be used interchangeably. The '794 patent does not attribute a specific difference to these effects and instead refers to "**a blinking or flashing effect,**" ('794 patent, 9:55-56) as well as "**flasher or twinkle bulbs.**" ('794 patent, 1:48) The terms generally describe an LED that possesses a temporal control function, allowing LEDs to be turned ON and OFF in a regular manner, so as to yield the claimed "twinkling effect" and associated "flashing rate."

2. Whereas Inoue is silent on "blinking effects," Smith includes advanced LED control functions including "blinking effects." For example, Smith states: "**The light-emitting diodes may be adapted for use as Christmas tree strings and various AC and DC control circuits are provided for driving the light-emitting diodes, for blinking effects, for alternating between two colors, for alternating between three colors, for improving the length of the string and uniformity of intensity of illumination and the like.**" (Smith, Abstract, underlining added) Furthermore, Smith discloses: "**Such bulbs have been configured to light in a blinking or on-off manner or to light sequentially over a few colors [...].**" (Smith, 1:58-60, underlining added) Yet furthermore, Smith discloses: "**It is a further object of the present invention to provide single color or multi-color light strings wherein the colors may be alternated, blinked, sequenced in any desired manner, or the like.**" (Smith, 3:16-19, underlining added) Smith discloses that the blinking control is accomplished by means of a controller: "**The Christmas tree light system [...] further includes a variable duty cycle controller means for selectively controlling the pulse duration during each of said first and second switching signals.**" (Smith, claim 108, underlining added)

3. Given Inoue's disclosure of a serial-parallel lighting circuit, and Smith's detailed disclosure of blinking of LEDs using a controller, the combination of Inoue with Smith obviates the claim.

XIII.D. [4] "The resistor bypass circuit of claim 1, wherein the LED light source uses 0.20 watts or less."

1. Inoue in view of Smith discloses and/or obviates the claim. LEDs traditionally have been light sources with very low power consumption. For example, Smith discloses that an LED "**consumes very little power for high energy efficiency**." (Smith, 2:41-42) Smith also discloses that LEDs have an "**extremely low energy**

consumption which is normally at least 1/10 of that of the conventional miniature incandescent Christmas tree bulbs." (Smith, 3:32-35, underlining added) Assuming a power consumption of 0.35-0.425 watt in lighting strings using incandescent light sources, Smith's factor of "**1/10**" would yield a power consumption of 0.035-0.0425 watt, that is less than 0.2 W, in lighting strings using LED light sources.[40]

2. The power consumption of 0.2 W (which is 200 mW) does not represent a technical challenge. Standard LEDs, referred to as "5 mm LEDs,"[41] as shown in the image below, have been a standard LED package for the last 50 years. The standard drive current associated with these packages is 20 mA. Assuming that the voltage drop across the LED is 3.0 V, the power consumed by the LED is $P = V \times I$ = 3.0 V × 20 mA = 60 mW. A POSA would have been motivated to use LEDs having a power consumption of, for example, 60 mW, that is, below 200 mW.

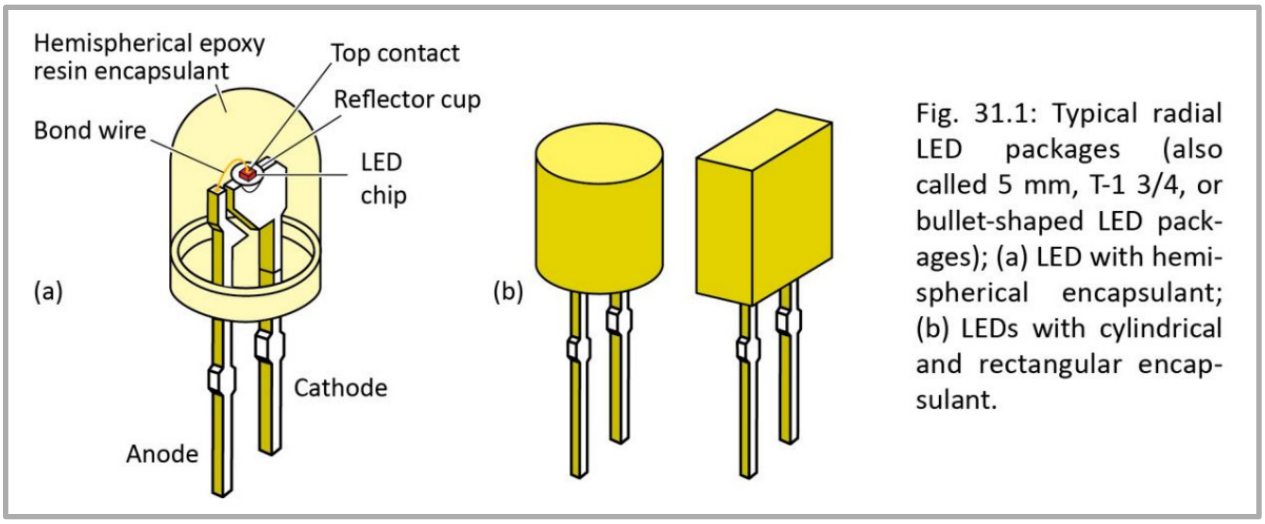

Fig. 31.1: Typical radial LED packages (also called 5 mm, T-1 3/4, or bullet-shaped LED packages); (a) LED with hemispherical encapsulant; (b) LEDs with cylindrical and rectangular encapsulant.

---

[40] To conclude, Smith explicitly discloses LEDs with a power consumption of less than 0.2 watts.

[41] "5 mm LEDs" are LEDs with a round body having a diameter of 5 mm. Such 5 mm LEDs have been available for the last 50 years and they are typically driven by a 20 mA current.

Figure caption: 5 mm LED packages that typically are driven by a current of 20 mA. (Figure 31.1 of book E.F. Schubert "Light Emitting Diodes" 4th edition, Google Books, Mountain View CA, 2023)

3. Given that in the early 2000s LED light sources had been widely available, given that in the early 2000s, LED light sources had been used for decorative series lighting circuits (such as holiday lights), and given that energy-saving light sources (such as LEDs) are generally preferable over energy-wasting light sources (such as incandescents), a POSA would have been motivated to use low-power LED light sources rather than high-power incandescent light sources.

4. Although Inoue does not disclose specific power values, it would be readily apparent to a POSA that for the LED applications envisioned by Inoue in combination with Smith (LED "serial circuits"), the power consumption of one LED would not exceed 0.2 W (200 mW).

XIII.E. [5] "The resistor bypass circuit of claim 1, at least one of the light sources is a semiconductor light source providing a twinkling effect."

1. Inoue in combination with Smith obviates the claim. I note that comparison of Claim 5 with Claim 3 yields that Claim 5 is less specific than Claim 3: Whereas Claim 5 is limited to a "twinkling effect," Claim 3 also includes "electronic circuits that control the flashing rate."[42] Because Claim 5 is less specific, the discussion of Claim 3 also applies to Claim 5. That is, prior art that obviates the more specific Claim 3, also obviates the less specific Claim 5.

---

[42] Both claims (Claim 3 and 5) require that the light source be a semiconductor light source, such as an LED.

XIII.F. [6] "The resistor bypass circuit of claim 1, at least one of the light sources is a semiconductor light source utilizing electronic circuits that control the flashing rate of the light source, which would only affect the individual lighting element as the resistive bypass would allow current to continue to flow in remaining lighting elements in the series circuit."

1. As a preliminary remark, I note that the claimed "the individual lighting element" lacks an antecedent basis. It is unclear what "the individual lighting element" refers to because it lacks an antecedent basis. Putting the antecedent basis issue aside, Inoue in view of Smith obviates the claim.

2. Smith states: "**The light-emitting diodes may be adapted for use as Christmas tree strings and various AC and DC control circuits are provided for driving the light-emitting diodes, for blinking effects, for alternating between two colors, for alternating between three colors, for improving the length of the string and uniformity of intensity of illumination and the like.**" (Smith, Abstract, underlining added) It would be apparent to a POSA that Smith's statement, as quoted above, would be applicable to an individual LED, an individual group of LEDs, multiple groups of LEDs, or the entire string of LEDs. Indeed, the fact that Smith discloses multiple "**control circuits**" (and not just one control circuit) further supports the notion that individual LEDs (or groups of LEDs) can be controlled independently.

3. Furthermore, Inoue's bypass circuits ensure that current is flowing even when an LED is in the OFF state and does not conduct current.

4. The claim requires that current is flowing through the bypass resistor when current is flowing through the LED light source (LED ON state), as well as when no current is flowing through the LED light source (LED OFF state). When an LED, for example LED1 is Inoue's Fig. 3, is in the OFF state, the current flow through it becomes zero and its resistance becomes infinite. Two cases are shown in the figure below: On the LHS[43] of the figure, current is flowing through LED1, whereas on the RHS[44] of the figure, the current flow through LED1 is interrupted, so that no current is flowing through LED1. A POSA would realize that in both cases, the LHS case and RHS case, current is flowing through the bypass resistor R12.

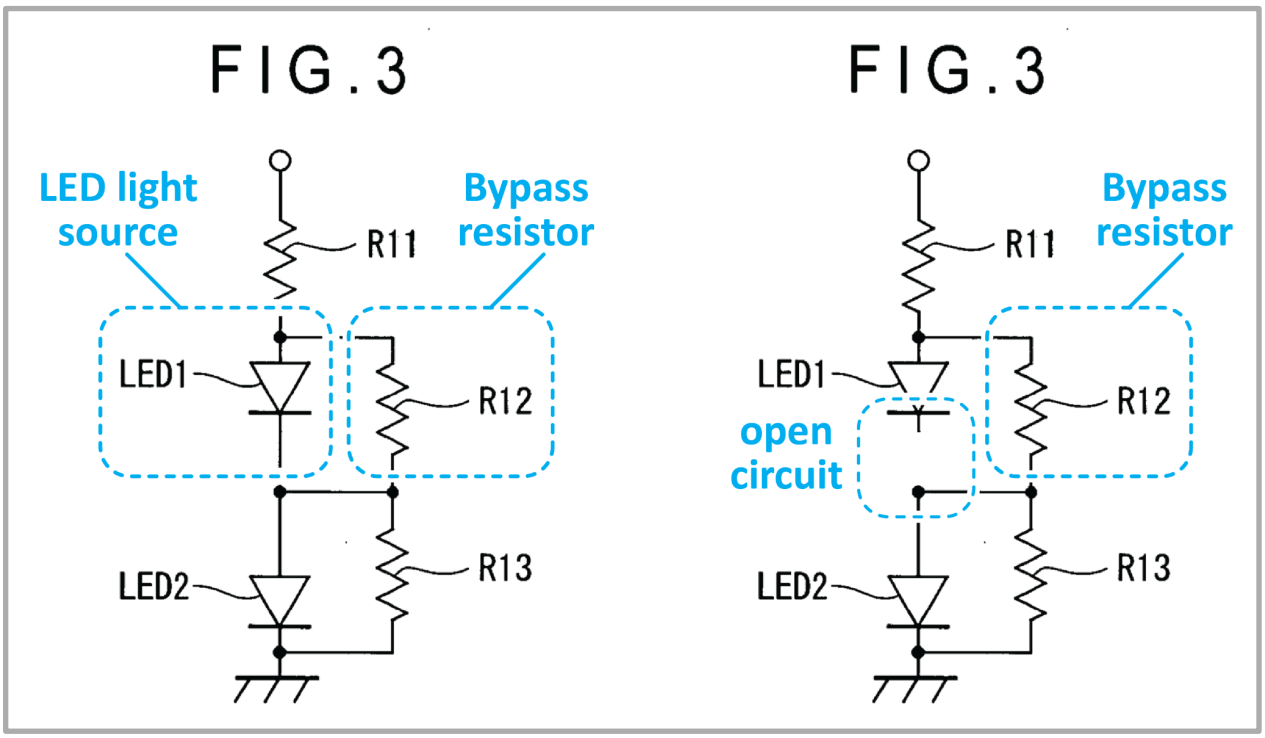

[43] LHS = Left-hand side

[44] RHS = Right-hand side

Figure caption: LHS:[45] Inoue, Fig. 3. RHS:[46] Inoue, Fig. 3, with LED1 circuit opened (interrupted or OFF) so that no current can flow through LED1 (modified and annotated).

5. Alternating ON / OFF states of an LED can be controlled by the electronic controllers envisioned by Smith. In the ON state, the associated LED consumes a current, whereas in the OFF state, the associated LED consumes no current. In either case, and as a matter of basic electrical circuit analysis, current continues to flow through the bypass resistor. As a consequence of the parallel circuit connection, a voltage dropping across the LED light source also drops across the bypass resistor. As a consequence of Ohm's law, a voltage dropping across a bypass resistor causes a current flowing through the bypass resistor.

XIII.G. [8] "The resistor bypass circuit of claim 1 being utilized in AC or DC circuits powered form a power source selected from the list consisting of batteries, step down transformers, AC utility power, or converters from AC to DC or DC to AC power, pulsed DC, and filtered or unfiltered DC, or partially filtered AC."

1. Inoue discloses and/or obviates the claim. Inoue discloses that the power supply for its LED series lighting circuit is a battery (such as a car battery). A car battery provides DC power, typically 12 V, that can drive four LEDs connected in series (with each LED using a drive voltage of 3.0 V).

---

[45] LHS = Left-hand side

[46] RHS = Right-hand side

2. Inoue discloses: "**[0028] On the other hand, when the voltage to be applied to the input terminal 111 falls below each of the Zener voltages, due to the case where <u>a power is supplied from a battery of a car</u> to other electrical equipment or due to a decrease in <u>battery</u> charge amount, current does not flow through the second serial circuits 115 and 116 but flows through the first serial circuits 112 and 113.**" (Inoue, [0028], underlining added)

XIII.H. [9pre] "A resistor bypass circuit for a series lighting circuit comprising …"

1. Inoue discloses and/or obviates the claim limitation. The present claim limitation is substantially similar to the [1pre] limitation, discussed above (see Ground 1 and 2), and the same reasoning expressed under the [1pre] limitation applies here as well.

XIII.I. [9a] "a plurality of serially connected LED light sources and a bypass resistor being connected in parallel with at least one of the respective light sources …"

1. Inoue discloses and/or obviates the claim limitation. The present claim limitation is substantially similar to the [1a] limitation, discussed above (see Ground 1 and 2), and the same reasoning expressed under the [1a] limitation applies here as well.

XIII.J. [9b] "said bypass resistor being in circuit and conducting current at all times when current is flowing through the circuit regardless of whether the LED light sources are conducting current therethrough …"

1. Inoue discloses and/or obviates the claim limitation. The present claim limitation is substantially similar to the [1b] limitation, discussed above (see Ground 1 and 2), and the same reasoning expressed under the [1b] limitation applies here as well.

XIII.K. [9c] "further including an LED flashing light source which includes a flashing circuit which causes the entire light circuit to flash."

1. Inoue in view of Smith obviates the claim limitation. Whereas Inoue is silent on flashing LEDs,[47] Smith discloses flashing LEDs that are controlled by one or multiple electronic controllers.

2. Smith states: "**The light-emitting diodes may be adapted for use as Christmas tree strings and various AC and DC control circuits are provided for driving the light-emitting diodes, for blinking effects, for alternating between two colors, for alternating between three colors, for improving the length of the string and uniformity of intensity of illumination and the like.**" (Smith, Abstract,

---

[47] The terms "twinkling effect," "flashing effect," and "blinking effect" may be used interchangeably. The '794 patent does not attribute a specific difference to these effects and instead refers to "**a blinking or flashing effect**" ('794 patent, 9:55-56) as well as "**flasher or twinkle bulbs.**" ('794 patent, 1:48)

underlining added) It would be apparent to a POSA that Smith's statement, as quoted above, would be applicable to an individual LED, an individual group of LEDs, multiple groups of LEDs, or the entire string of LEDs. Indeed, the fact that Smith discloses multiple "**control circuits**" (and not just one control circuit) further supports the notion that individual LEDs, groups of LEDs, or the entire lighting circuit can be controlled individually and collectively.

XIV. Ground 6: Holler in view of Callahan obviates Claims 11, 12, 13 and 14

XIV.A. Motivation to combine Holler with Callahan

1. Holler discloses a series lighting circuit that includes incandescent lamps that are connected in series and bypass resistors, with each bypass resistor shunting one of the incandescent lamps. Holler is limited to incandescent light sources and does not disclose LED light sources.

2. Callahan offers the following advantageous features. **First**, Callahan discloses the employment of LED light sources which have advantages over incandescent light sources, specifically "**improved power conservation and reliability.**" (Callahan, 1:28) **Second**, Callahan offers greater control over the light sources, specifically over "**color, blink rate, brightness, etc.**" (Callahan, 4:6)

3. A POSA would be motivated to implement Holler's series lighting circuit, including the bypass resistors, by using Callahan's LED light sources, thereby conserving electrical power, attaining greater reliability, and attaining a higher degree of lighting control that includes color, brightness, and blink rate.

4. The combination would be a predictable combination of elements disclosed in the prior art. Both Holler and Callahan disclose series lighting circuits. Both Holler and Callahan use light sources that require voltages of only a few volts (such as 3.0 V). Both Holler and Callahan disclose predictable and combinable electrical circuits whose functionality can be determined a priori. A POSA would be motivated to take advantage of Callahan's LED light sources when implementing the Holler lighting circuit.

XIV.B. [11] "The resistor bypass circuit of claim 10, the light source being a semiconductor light source for providing color changing characteristics."

1. Holler in view of Callahan discloses and/or obviates the claim. Holler discloses a resistor bypass circuit in which incandescent light sources are connected in series, and in which each light source is shunted by a bypass resistor. Holler's lighting circuit is shown in the image below.

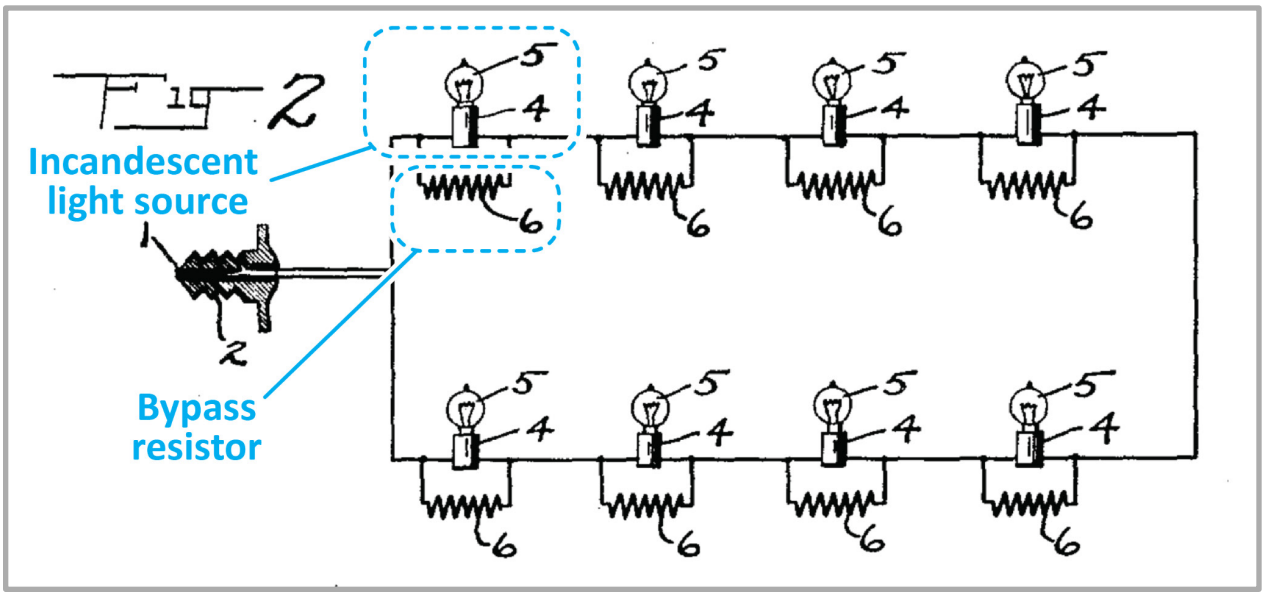

Figure caption: Holler, Fig. 2, showing incandescent light sources and associated bypass resistors (or shunts), connected in a series circuit (annotated).

2. Callahan discloses LEDs, which are semiconductor light sources: "**Advances in the luminosity of LEDs and white light emitting LEDs will permit large scale applications of LEDs in replacement of other conventional light sources. Light emitting diodes provide advantages over previous incandescent and other types of lighting systems due to improved power conservation and reliability.**" (Callahan, 1:22-28, underlining added) Furthermore, Callahan discloses the claimed "color changing characteristics": "**Referring to FIG. 1, an illumination device 10 for a decorative lighting system is illustrated. The illumination device 10 includes an application specific integrated circuit light emitting diode (LED) driver 12 for individual and precise control of high brightness decorative color tunable LEDs. The color tunable LED in this embodiment is Red-Green-Blue (RGB) LEDs 14 within an optical bulb.**" (Callahan, 1=2:54-60, underlining added) Callahan's Figure 1 is reproduced below. In addition to color changing characteristics, Callahan offers greater control over LED light sources in terms of "**color, blink rate, brightness, etc.**" (Callahan, 4:6)

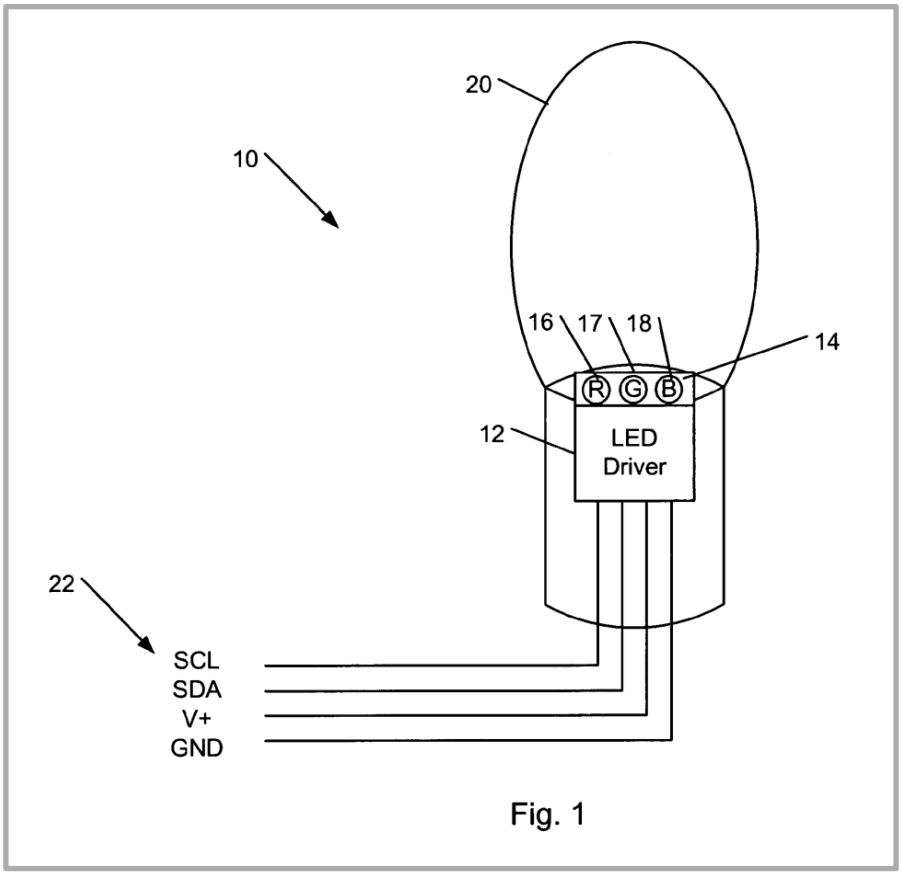

Figure caption: Callahan, Fig. 1, showing individually controllable RGB[48] LED chips in one package.

XIV.C. [12] "The resistor bypass circuit of claim 10, the semiconductor light source utilizing LED packages that incorporate two or more LED chips, and an integrated circuit (IC), the integrated circuit controlling each LED chip in respective LED packages independently."

1. Holler in view of Callahan discloses and/or obviates the claim. Holler discloses a resistor bypass circuit, as shown under Claim [11] (above). A POSA would be motivated to replace the incandescent light sources of Holler by the LED light

[48] RGB = Reg, green, blue.

sources of Callahan due to the advantages of LEDs in terms of energy efficiency, reliability, and controllability.

2. Callahan discloses LED packages with multiple LED chips within one package, such as the LED package shown in Callahan's Figure 1 which includes RGB LED chips. Callahan discloses that the LED chips can be controlled individually and independently by an integrated circuit. Callahan discloses: "**According to one embodiment of an illumination device, variable color, blink rates, and brightness of a single-dye RGB LEDs are controlled via an I^2C communicating integrated circuit, the LED driver.**" (Callahan, 2:66-3:3, underlining added) Callahan further discloses: "**In one regard, an LED driver is a single application specific integrated circuit (ASIC) which minimizes space of peripherals or other discrete devices or individual microcontrollers that would otherwise be required to be placed in the illumination device 10.**"[49] (Callahan, 3:22-27, underlining added) Because each LED package has a driver IC integrated within the package, individual and independent control over "**color, blink rate, brightness, etc.**" (Callahan, 4:6) is afforded.

XIV.D. [13] "The resistor bypass circuit of claim 12, the IC controlling the current and/or voltage to the individual LED chips in the LED package, the control providing for the mixing of the LED chip colors to get various resultant colors."

1. Holler in view of Callahan discloses and/or obviates the claim. Holler discloses a resistor bypass circuit, as shown under Claim [11] (above). A POSA would

[49] A POSITA would recognize that an "application specific integrated circuit (ASIC)" is an electronic circuit.

be motivated to replace the incandescent light sources of Holler by the LED light sources of Callahan due to the advantages of LEDs in terms of energy efficiency, reliability, and controllability.

2. Callahan discloses LED packages with multiple LED chips within one package, such as the LED package shown in Callahan's Figure 1 which includes RGB LED chips. Callahan discloses that the LED chips can be controlled individually and independently by an integrated circuit. Callahan discloses: "**According to one embodiment of an illumination device, variable color, blink rates, and brightness of a single-dye RGB LEDs are controlled via an I^2C communicating integrated circuit, the LED driver.**" (Callahan, 2:66-3:3, underlining added) Callahan further discloses: "**In one regard, an LED driver is a single application specific integrated circuit (ASIC) which minimizes space of peripherals or other discrete devices or individual microcontrollers that would otherwise be required to be placed in the illumination device 10.**" (Callahan, 3:22-27, underlining added) Because each LED package has a driver IC integrated within the package, individual and independent control over "**color, blink rate, brightness, etc.**" (Callahan, 4:6) is afforded. Callahan yet further discloses: "**As such, additional higher-powered MOSFETS or other higher power current gates may be externally connected or internally disposed in order to drive higher power RGB LEDs or other color mixing or color tunable LED assemblies.**" (Callahan, 5:4-8, underlining added)

XIV.E. [14] "The resistor bypass circuit of claim 13, the control only affecting individual lighting element, the bypass resistor providing for current continuing to flow in remaining lighting elements in the series circuit."

1. Holler in view of Callahan discloses and/or obviates the claim. Holler discloses a resistor bypass circuit, as shown under Claim [11] (above). In Holler,

each lamp is connected to a bypass resistor, **13**, that shunts the lamp. If the lamp is in its OFF state, current continues to flow through the bypass resistor shunting the lamp, and through the entire series lighting circuit. The bypass resistors of Holler shunt the light sources, so that current flows through the bypass resistors at all times, as long as the series lighting circuit is subjected to a power supply voltage (irrespective of the status of the light source: ON or OFF, and, functioning or non-functioning). A POSA would be motivated to replace the incandescent light sources of Holler by the LED light sources of Callahan due to the advantages of LEDs in terms of energy efficiency, reliability, and controllability.

2. Callahan discloses LED packages with multiple LED chips within one package, such as the LED package shown in Callahan's Figure 1 which includes RGB LED chips. Callahan discloses that the LED chips can be controlled individually and independently by an integrated circuit. Callahan discloses: "**According to one embodiment of an illumination device, variable color, blink rates, and brightness of a single-dye RGB LEDs are controlled via an I^2C communicating integrated circuit, the LED driver.**" (Callahan, 2:66-3:3, underlining added) Callahan further discloses: "**In one regard, an LED driver is a single application specific integrated circuit (ASIC) which minimizes space of peripherals or other discrete devices or individual microcontrollers that would otherwise be required to be placed in the illumination device 10.**" (Callahan, 3:22-27, underlining added) Because each LED package has a driver IC integrated within the package, individual and independent control over "**color, blink rate, brightness, etc.**" (Callahan, 4:6) is afforded.

XV. Ground 7: Yu anticipates and/or obviates Claims 1, 2, 10 and 15

XV.A. [1pre] "A resistor bypass circuit for a lighting circuit comprising …"

1. Yu discloses and/or obviates the claim limitation. Yu discloses a series lighting circuit that includes bypass resistors that shunt the light sources. Yu states: "**Disclosed is a LED light string that uses parallel connected resistors that are connected across the leads of the LEDs in a light string and are disposed in the socket of the LED lamp holder. The use of parallel connected resistors across the leads of the LEDs greatly enhances the reliability of the light string.**" (Yu, Abstract, underlining added)

XV.B. [1a] "a plurality of serially connected LED light sources and a bypass resistor being connected in parallel with at least one of the respective light sources …"

1. Yu discloses and/or obviates the claim limitation. Yu states: "**An embodiment of the present invention may therefore comprise a parallel-series wired light string comprising: [...] a plurality of LED modules wired in series [...] a second resistor disposed in the LED holder that is wired in parallel with the LED across the leads.**" (Yu, [0005], underlining added) Yu further states: "**Each module contains a LED and a resistor connected in parallel. For example, module 324 includes a LED 316 which is connected in parallel with a resistor 318.**" (Yu, [0014], underlining added)

2. Yu's Figure 3 circuit diagram, shown below, includes a series lighting string. Inspection of the image reveals that LEDs are connected in a series circuit configuration. Inspection of the image also reveals that each LED is bypassed by a shunt resistor.

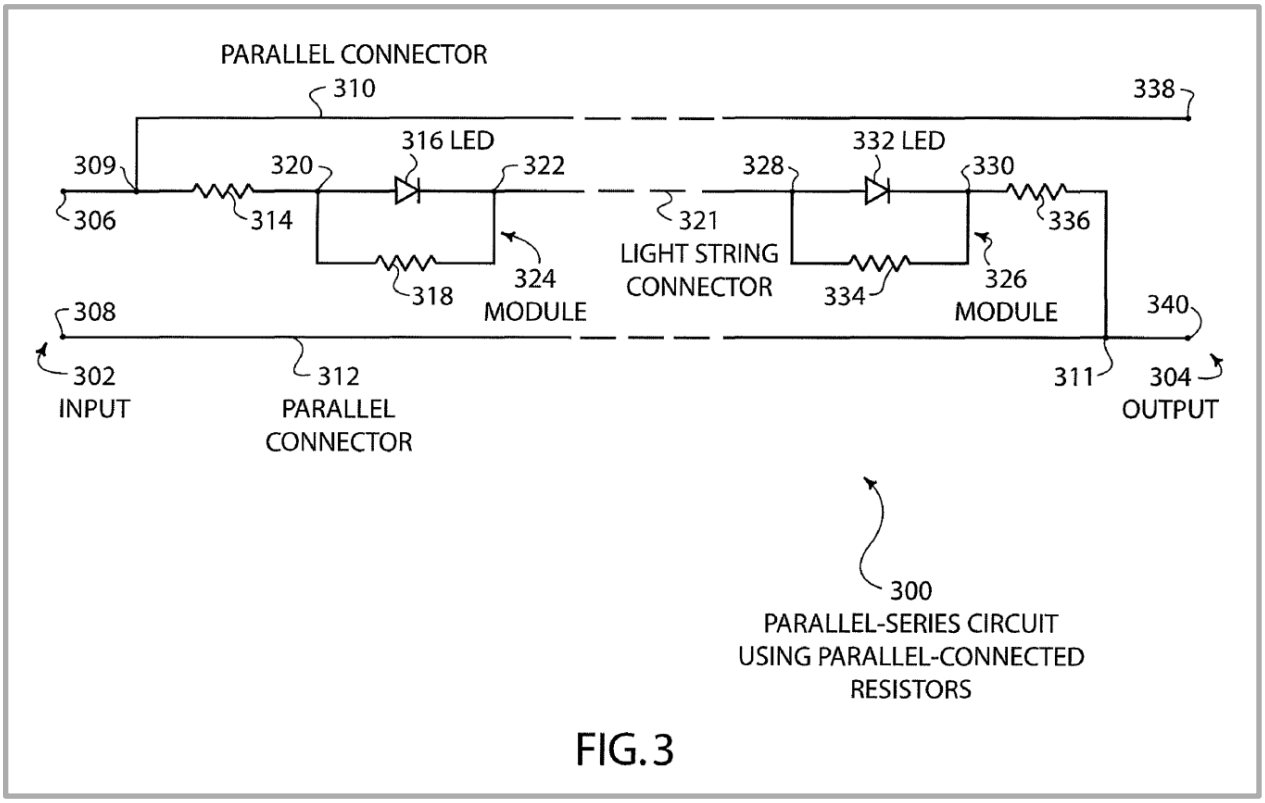

Figure caption: Yu, Fig. 3, showing a series-parallel lighting circuit that includes LED light source **316** and bypass resistor **318**.

XV.C. [1b] "said bypass resistor being in circuit and conducting current at all times across the light sources when current is flowing through the circuit regardless of whether the LED light sources are conducting current therethrough."

1. Yu discloses and/or obviates the claim limitation. The voltage that drops across the light source, also and inevitably drops across the parallel bypass resistor

(shunt) causing, based on Ohm's law, a current through the bypass resistor. The current through the bypass resistor is given by Ohm's law:

$$I = V / R.$$

2. The current flows, even if the associated light source has failed and is an open circuit.

3. Let us assume that one of the light sources has failed (burned out).[50] In this case, the resistance of the light source is infinite so that no current is flowing through the light source and the entire current flowing through the series lighting circuit is also flowing through the bypass resistor.

4. In the case in which one lamp (out of the N lamps) has burned out, the current flowing through the bypass resistor associated with the failed light source is given by

$$I = V / ((N - 1) \times (R_{\text{LightSource}} \,||\, R_{\text{Bypass}}) + R_{\text{Bypass}}).$$[51]

---

[50] In an incandescent lamp, the failure is commonly (or virtually always) caused by the tungsten filament burning out, that is, the tungsten filament is locally melted and evaporated so that the filament is electrically interrupted. As a result, the light source has failed to become an open circuit having infinite resistance and drawing no current. The most common failure mode of LED light sources is similar: LEDs fail by becoming an open circuit having infinite resistance so that no current is flowing through the LED light source.

[51] The notation "R1 || R2" is used to indicate that the two resistances, R1 and R2, are connected in parallel.

where $R_{\text{LightSource}}$ is the resistance of the light source, R_{Bypass} is the resistance of the bypass resistor, and ($R_{\text{LightSource}}$ || R_{Bypass}) is the resistance of a lamp, that is, the light source resistance ($R_{\text{LightSource}}$) connected in parallel to the bypass resistance (R_{Bypass}).

5. The lamp resistance (R_{Lamp}) is the resistance of two parallel resistances and can be calculated by the following equation

$$R_{\text{Lamp}}^{-1} = R_{\text{LightSource}}^{-1} + R_{\text{Bypass}}^{-1}.$$

6. The equations used above are among the most elementary equations of electrical engineering, such as Ohm's law equation, and a resistance equation for two resistors connected in parallel. A POSA would be in command of these equations since they are consistently taught in engineering college curricula.[52]

7. Based on the reasoning given above, a POSA would understand that "said bypass resistor being in circuit and conducting current at all times when current is flowing through the circuit regardless of whether the LED light sources are conducting current therethrough."

XV.D. [2] "The resistor bypass circuit of claim 1, where the circuit is series-parallel connected."

1. Yu discloses and/or obviates the claim. Yu states: "**An embodiment of the present invention may therefore comprise a <u>parallel-series</u> wired light string comprising: [...] a plurality of <u>LED modules wired in series</u> [...] a second <u>resistor</u>**

[52] These equations are taught in engineering college curricula such as electrical engineering, applied physics, material science, and mechanical engineering.

disposed in the LED holder that is wired in parallel with the LED across the leads."[53] (Yu, [0005], underlining added)

2. Figure 3 of Yu, reproduced below, shows that multiple LEDs are connected in series, and that each LED is connected to a resistor in a parallel manner. Accordingly, the circuit is a series-parallel circuit.

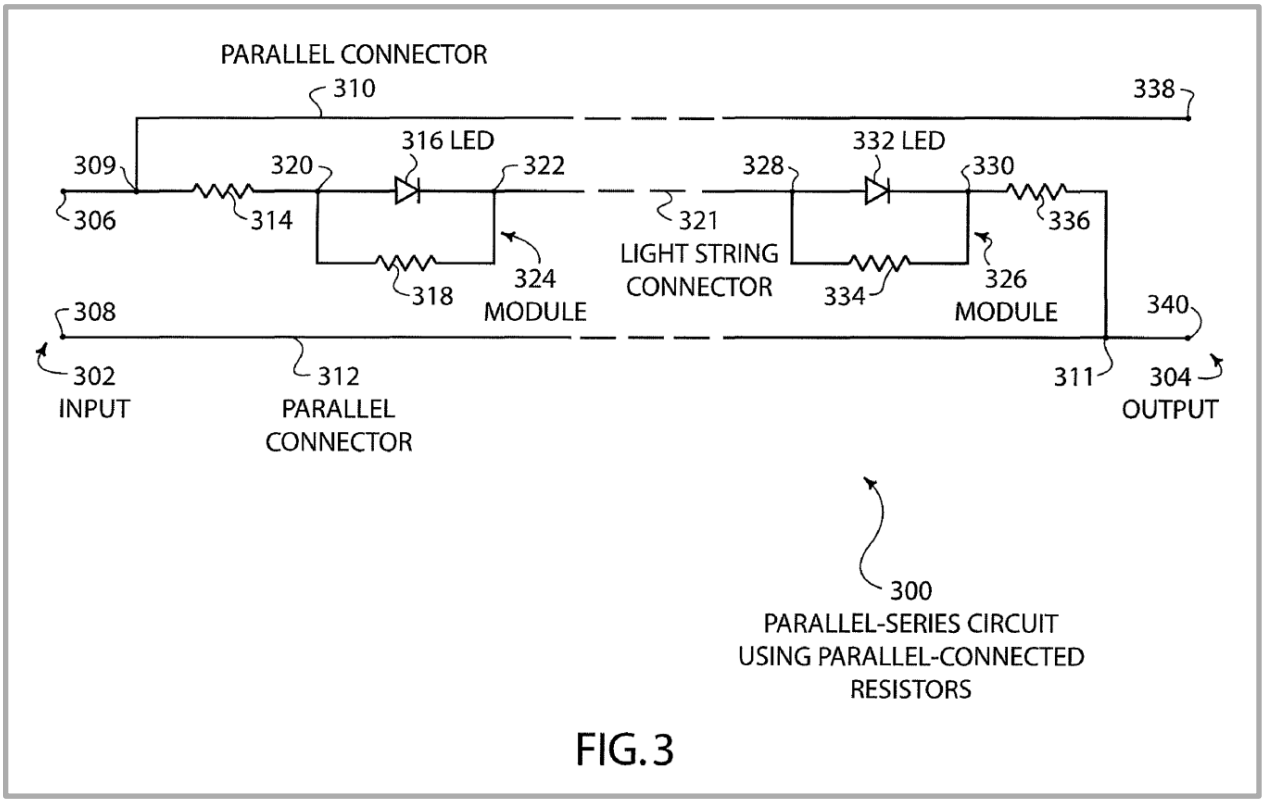

FIG. 3

Figure caption: Yu, Fig. 3, showing a series-parallel lighting circuit that includes LED light source **316** and bypass resistor **318**.

[53] There is no difference between a series-parallel circuit configuration and a parallel-series circuit configuration. In either case, there are components that are circuited in series, and components that are circuited in parallel.

XV.E. [10pre] "A resistor bypass circuit for a lighting circuit comprising …"

1. Yu discloses and/or obviates the claim limitation. The present claim limitation is substantially similar to the [1pre] limitation, discussed above, and the same reasoning expressed under the [1pre] limitation applies here as well.

XV.F. [10a] "a plurality of serially connected LED light sources and a bypass resistor being connected in parallel with at least one of the respective light sources …"

1. Yu discloses and/or obviates the claim limitation. The present claim limitation is substantially similar to the [1a] limitation, discussed above, and the same reasoning expressed under the [1a] limitation applies here as well.

XV.G. [10b] "said bypass resistor connected across the at least one light sources and being in circuit and conducting current at all times when current is flowing through the circuit regardless of whether the LED light sources are conducting current therethrough …"

1. Yu discloses and/or obviates the claim limitation. The present claim limitation is substantially similar to the [1b] limitation, discussed above, and the same reasoning expressed under the [1b] limitation applies here as well.

XV.H. [10c] "wherein the resistance of the bypass resistor is equal to or greater than the inherent resistance of the light source to which the resistor is attached."

1. Yu discloses and/or obviates the claim limitation. Regarding the numerical values of the bypass resistor, the following considerations are relevant, which a POSA would appreciate: Assume that a light source has a voltage, *V*, across it, and a current, *I*, flowing through it. Based on Ohm's law, the light source has an ohmic resistance of

$$R_{\text{LightSource}} = V / I .$$

2. Assume further that the bypass resistor (shunt) has a resistance of R_{Bypass}. If the bypass resistor has a smaller resistance than the light source ($R_{\text{Bypass}} < R_{\text{LightSource}}$), most of the current through the lamp[54] will pass through the bypass resistor.[55] That is, the majority of the electrical power would be consumed by the bypass resistor rather than the light source. This would be contrary to the primary purpose of the series lighting circuit, which is to emit light and not to generate heat. Accordingly, a POSA would understand that when choosing a bypass resistor meeting the condition $R_{\text{Bypass}} < R_{\text{LightSource}}$, most of the electrical power would be dissipated as heat rather than emitted as light. A POSA would understand that this

---

[54] Here the term "lamp" is used to include a light source (such as an LED) and a bypass resistor that shunts the light source. Occasionally, the bypass resistor is integrated with the light source to form the lamp.

[55] An electrical current always prefers the path of least resistance. Consequently, in a parallel circuit with $R_{\text{Bypass}} < R_{\text{LightSource}}$, most of the current flows through the bypass resistor.

is contrary to the primary purpose of the lighting string (as well as contrary to common sense) and, for this reason, a POSA would not proceed in this manner. Instead, a POSA would be motivated to make the lighting string emit light (rather than heat) and choose a bypass resistor that is equal or greater than the resistance of the light source ($R_{\text{Bypass}} \geq R_{\text{LightSource}}$). In this case, at least half of the electrical power would be used to generate light, rather than heat. A POSA would be naturally motivated to design an energy-efficient lighting string, rather than an energy-wasting lighting string. Similarly, consumers demand energy-efficient lighting strings rather than energy-wasting lighting strings. By choosing a bypass resistance equal or greater than the light source resistance, a more energy-efficient lighting string can be accomplished, consistent with the motivation of a POSA and the demands of consumers. In my opinion, a POSA would be receptive to both market forces and consumer demand, and have a preference for energy-efficient designs over an energy-wasting design.

3. Furthermore, a POSA would also understand that upon the failure of one light source, the voltage drops across the other, functioning light sources should not increase, because such increase in voltage would increase the current through the light source as well, thereby "overdriving" the light source and reducing its lifetime. It is well known that an excess current ("overcurrent") and the resulting excess heat reduces the lifetime of a light source. Accordingly, a POSA would choose a bypass resistance value that does not increase the current to the other light sources in case a light source fails (burns out).

4. A POSA would understand that a fully functional series lighting circuit with N lamps would draw a current that is given by the equation

$$I = V / (N \times (R_{\text{LightSource}} \mid\mid R_{\text{Bypass}})).$$

where N is the number of lamps (light sources and associated bypass resistors) in the series lighting circuit, and the other symbols have their usual meaning (I = current; V = voltage). In addition, a POSA would understand that if one lamp fails, the current through the series lighting circuit will change to

$$I = V / ((N - 1) \times (R_{\text{LightSource}} \mid\mid R_{\text{Bypass}}) + R_{\text{Bypass}}).$$

5. Finally, a POSA would understand that when choosing a bypass resistance that is equal or greater than the light source resistance ($R_{\text{Bypass}} \geq R_{\text{LightSource}}$), the voltage drop across the remaining light sources would not increase upon the failure of a light source.

6. For example, if the light source resistance and the bypass resistance are equal ($R_{\text{LightSource}} = R_{\text{Bypass}} = R$), the current through a fully functional series lighting circuit is given by

$$I = V / (N \times (½\, R)).$$

7. If one lamp fails, the current through the series lighting circuit changes to

$$I = V / ((N - 1) \times (½\, R) + R) = V / ((N + 1) \times (½\, R)) .$$

8. Comparing the last two equations yields that the overall resistance increases from $N \times ½\, R$ to $(N + 1) \times ½\, R$. Because the resistance slightly increases, the current slightly decreases, including the current through each of the light sources. Accordingly, it follows from the above equations and associated reasoning that when the bypass resistance is equal to (or greater than) the light source resistance ($R_{\text{Bypass}} \geq R_{\text{LightSource}}$), the following advantages are attained: **First**, most of the electrical power is used to drive the light source rather than the bypass resistor. That is, most of the power is used to generate light rather than heat. **Second**, upon the failure of a light source (burn out), neither the current nor the voltage across

the remaining light sources would increase thereby minimizing the burn out potential of the remaining light sources in the light string.

9. The above considerations are elementary electrical engineering considerations, such as series circuit analysis, parallel circuit analysis, and Ohm's law, all of which a POSA (having reviewed the Yu prior art) would have command of. Furthermore, a POSA (having reviewed the Yu prior art) would be motivated to design a system that is efficient and reliable. Conversely, a POSA would not design a system that is inefficient and unreliable. Accordingly, the POSA (having reviewed the Yu prior art) would choose a bypass resistance meeting the condition $R_{\text{Bypass}} \geq R_{\text{LightSource}}$, that is, a bypass resistance equal or greater than the light source resistance.

XV.I. [15pre] "A method of bypassing an LED light source, having a predetermined resistance to current flow, in a serially connected LED light string having at least one light source, the method comprising the steps of …"

1. Yu discloses and/or obviates the claim limitation. As discussed under Claim limitation [1a], Yu discloses an apparatus that includes and/or obviates the features recited in the present claim.

2. An apparatus is necessarily fabricated by a fabrication method. Because the apparatus meets the claim requirements, the fabrication method necessarily includes …

- … the step of serially connecting LED light sources,
- … the step of determining the resistance values of the bypass resistors, and
- … the step of connecting the bypass resistors to the LEDs.

XV.J. [15a] "the steps of selecting a bypass resistor with the following characteristics: a resistance greater than or equal to the predetermined resistance of said LED light source; the ability to carry all of the current in the light string; and the ability to operate at 100% duty cycle …"

1. Yu discloses an apparatus that meets the claim requirements. As discussed under claim limitation [10c] (above) a POSA being aware of Yu, would be familiar with elementary electrical engineering considerations, such as series circuit analysis, parallel circuit analysis, and Ohm's law. Furthermore, a POSA (having reviewed the Yu prior art) would be motivated to design a system that is efficient and reliable. Conversely, a POSA would not design a system that is inefficient and unreliable. Accordingly, the POSA (having reviewed the Yu prior art) would choose a bypass resistance meeting the condition $R_{\text{Bypass}} \geq R_{\text{LightSource}}$, that is, a bypass resistance equal or greater than the light source resistance.

2. The bypass resistors of Yu shunt the light sources, so that current flows through the bypass resistors at all times, as long as the series lighting circuit is subjected to a power supply voltage (irrespective of the status of the light source: ON or OFF, and, functioning or non-functioning). Given that current flows through the shunting bypass resistor at all times, the bypass resistor operates and conducts current at all times, that is, it operates at 100% duty cycle and, accordingly, is capable of operating at a 100% duty cycle. The teachings thus demonstrate that Holler's bypass resistor is capable of carrying the current through itself, as well as all the current through the series lighting string, including a 100% duty cycle current.

3. A POSA would be familiar with basic electrical engineering knowledge, including Ohm's law, and the following considerations: As a general principle, if one resistor is removed from a multi-resistor linear circuit, the overall resistance of the circuit increases, and the associated current through the circuit decreases. For example, if one light source of the series lighting circuit fails (burns out), the overall resistance of the circuit increases, and the associated current through the circuit inevitably decreases. As a consequence, if one light source burns out, the current to the remaining light sources does not increase but instead slightly decreases, thereby minimizing the burn out potential of other light sources in the light string. The principle holds true for a lighting circuit that includes incandescent light sources as well as LED light sources. If an LED fails (burns out), the current to the remaining light sources does not increase but instead slightly decreases, thereby minimizing the burn out potential of other light sources in the light string.

4. The teachings thus demonstrate that Yu discloses and/or renders obvious an apparatus in which the bypass resistor is equal to or greater than the light source ohmic resistance, is capable of carrying the current through itself, through the series lighting string, and is capable of operating at a 100% duty cycle current.

5. Yu discloses an apparatus that fulfills and/or obviates the present claim requirements. An apparatus is necessarily fabricated by a fabrication method. Because the apparatus meets the claim requirements, the fabrication method necessarily includes …

- … the step of selecting a bypass resistor that has a resistance equal or greater than the predetermined resistance[56] of the LED light source,
- … the step of selecting a bypass resistor that has the ability to carry all of the current in the light string, and
- … the step of selecting a bypass resistor that has the ability to operate at 100% duty cycle.

XV.K. [15b] "inserting said bypass resistor in parallel with said at least one LED light source."

1. As shown above, both the Yu string lighting circuit includes a bypass resistor that is in parallel with a light source. The light source is an LED light source (as taught by Yu). Accordingly, Yu discloses an apparatus that meets the claim requirements.

2. An apparatus is necessarily fabricated by a fabrication method. Because the apparatus meets the claim requirements, the fabrication method necessarily includes …

- … the step of inserting said bypass resistor in parallel with said at least one LED light source.

[56] The predetermined resistance of the light source may coincide with the ohmic resistance of the light source. The ohmic resistance is given by by Ohm's law as $R = V / I$.

XVI. Secondary considerations

1. I am not aware of any relevant information related to secondary considerations of non-obviousness. For example, I am not aware of any attempt to commercialize the claimed technology in a product or through licensing. To the extent Patent Owner comes forward with any such information, I will consider it.

XVII. Right to supplement

1. I reserve the right to supplement my opinions in the future to respond to any arguments that the Patent Owner raises. This declaration represents only those opinions that I have formed to date. I reserve the right to revise, supplement, and/or amend my opinions stated herein based on new information that becomes available to me and on my continuing analysis of the materials already provided.

2. I may utilize the documents cited and/or listed herein, or portions of those documents, as exhibits at any hearing or trial in this proceeding. I may further prepare and use exhibits that summarize portions of my testimony or key terms or concepts presented therein, or other demonstrative exhibits, at any hearing or trial in this proceeding.

3. I reserve the right to supplement my testimony and this report in response to any judicial determinations, in response to the arguments expressed by the Patent Owner or the opinions of the Patent Owner's experts in this proceeding, and/or in light of additional evidence or testimony brought forth at trial or otherwise brought to my attention after the date of my signature below.

XVIII. Conclusion

4. I declare that all statements made herein of my knowledge are true, and that all statements made on information and belief are believed to be true, and that these statements were made with the knowledge that willful false statements and the like so made are punishable by fine or imprisonment, or both, under Section 1001 of Title 18 of the United States Code.

Executed on August 2, 2024

By:

(E. Fred Schubert)