MARK B. MIZRAHI (BAR NO. 179384)
mark.mizrahi@saul.com
SAUL EWING LLP
1888 Century Park East, Suite 1500
Los Angeles, California 90067
Telephone: (310) 255-6100
Facsimile: (310) 255-6200

Courtland C. Merrill (*Pro Hac Vice*)
courtland.merrill@saul.com
SAUL EWING LLP
33 South Sixth Street, Suite 4750
Minneapolis, MN 55402
Telephone: (612) 225-2943

Attorneys for Plaintiff,
SEASONAL SPECIALTIES, LLC

SAUL EWING LLP
1888 CENTURY PARK EAST, SUITE 1500
LOS ANGELES, CALIFORNIA 90067

UNITED STATES DISTRICT COURT

CENTRAL DISTRICT OF CALIFORNIA, WESTERN DIVISION

SEASONAL SPECIALTIES, LLC, Plaintiff, vs. LEDUP MANUFACTURING GROUP LTD., Defendant.	Case No. 2:23-cv-06318-SB-AS **FIRST AMENDED COMPLAINT FOR PATENT INFRINGEMENT** **JURY TRIAL DEMANDED**

Plaintiff Seasonal Specialties, LLC ("Seasonal") for its Complaint against Defendant LEDup Manufacturing Group Ltd. ("LEDup"), alleges as follows:

JURISDICTION AND VENUE

1. This Court has subject matter jurisdiction pursuant to 28 U.S.C. §§ 1331 and 1338(a) because this is an action for patent infringement arising under the laws of the United States, 35 U.S.C. § 1 *et seq.*, and more particularly, 35 U.S.C. §§ 271 and 281.

SAUL EWING LLP
1888 CENTURY PARK EAST, SUITE 1500
LOS ANGELES, CALIFORNIA 90067

2. This Court has personal jurisdiction over LEDup because LEDup, on information and belief, is subject to specific and general jurisdiction in the State of California. Upon information and belief, LEDup has employees and a place of business located in the State of California. LEDup or its agents, on information and belief, have transacted business in California by selling the accused products to customers in California. The exercise of personal jurisdiction comports with LEDup's right to due process because LEDup has purposefully availed itself of the privilege of conducting activities within California such that it should reasonably anticipate being haled into court here. The Court alternatively has personal jurisdiction over LEDup under Fed. R. Civ. P. 4(k)(2), to the extent LEDup is not subject to jurisdiction in any state's court of general jurisdiction, based on its contacts with the United States as a whole.

3. Venue is proper in this District under 28 U.S.C. § 1400(b) because LEDup resides in the District, and has committed acts of patent infringement in the State of California and this District.

THE PARTIES

4. Seasonal is a Minnesota limited liability company with its principal place of business located at 11455 Valley View Road, Eden Prairie, Minnesota.

5. On information and belief, LEDup is a company organized under the laws of the People's Republic of China, having a principal place of business at 9th Floor Tung Ning Bldg., 249-253 Des Voeux Rd. Central Hong Kong, Hong Kong, People's Republic of China.

NATURE OF THE ACTION

6. This is an action arising under the United States patent laws, Title 35 of the United States Code, §§ 100-299, including 35 U.S.C. §§ 271, 281-285, for infringement of U.S. Patent No. 9,554,437 ("'437 patent"), U.S. Patent No. 10,080,265 ("'265 patent"), U.S. Patent No. 11,096,252 ("'252 patent"), and U.S. Patent No. 11,533,794 ("'794 patent") (collectively, "the Patents-in-Suit"), of which

SAUL EWING LLP
1888 CENTURY PARK EAST, SUITE 1500
LOS ANGELES, CALIFORNIA 90067

Seasonal is the assignee, directed to various embodiments of lighting devices.

7. The Patents-in-Suit claim an invention for changing the function of a low cost special function bulb controller to switch between having a visual appearance of steady-on illumination and a pre-programmed special visual appearance.

8. The Patents-in-Suits also claim an invention for an improved resistive bypass circuit for serially-connected LED lights that will continue to conduct electricity and keep the remainder of the series circuit of lights lit even when one or more individual lighting elements are burnt out, defective, broken, or have a loose connection.

9. LEDup has improperly sold, offered to sell, imported, and, on information and belief, induced others to use, import, sell, and offer to sell lighting products that infringe Seasonal's Patents-in-Suit.

BACKGROUND

10. Seasonal is engaged in the business of, among other things, developing and selling decorative lighting products, including decorative LED lighting products manufactured for sale and use during the holiday season.

11. Seasonal has developed a number of novel and commercially successful decorative lighting products, such as pre-lit holiday trees and light strings, and improvements to the manufacturing and technology relating to such products.

Steady-On Invention

12. Decorative lighting, such as holiday lighting, includes strings of bulbs (often LEDs), spaced out along a pair of wires. Special lighting effects, such as twinkling and flashing, give the visual impression the bulbs are shimmering, and are desirable to consumers.

13. To create these visual effects, bulbs can be directly wired. However, to control bulbs in such a manner requires multiple conductors to each bulb. Alternatively, bulbs may contain their own microcontroller. The disadvantage of this

SAUL EWING LLP
1888 CENTURY PARK EAST, SUITE 1500
LOS ANGELES, CALIFORNIA 90067

construction, however, is the difficulty selecting between modes of the lights, such as being steady illuminating in one mode, and another mode where the bulb performs a special effect programmed according to a microcontroller connected to an individual bulb. In an alternative construction, bulbs may include addressable circuits which allow individual control of bulbs, but this alternative increases cost considerably.

14. Seasonal's engineers invented a system for changing the function of a low-cost special function bulb controller to switch between having a visual appearance of steady-on and a pre-programmed special visual appearance. The invention is hereafter referred to as the "Steady-On Invention."

15. The Steady-On Invention uses a first circuit for controlling power to a bulb that produces a predetermined special visual lighting effect. '437 patent at 4:21-37. The first circuit powers up starting from an initial steady-on illuminated state, followed by the programmed special lighting effect generated by the controller, before repeating the predetermined-cycle, re-starting with the initial steady-on state. *Id*.

16. A second circuit periodically interrupts flow of current to the first circuit controlling power to the bulb. '437 patent at 4:38-52. The interruption frequency is sufficient to cause the first circuit to reset to its initial steady-on state of illumination, and then continues to remain in a steady-on state as long as power continues to be interrupted. The special lighting effect bulb remains steady-on until the power interruption is discontinued, thereby returning the first circuit to its pre-programmed special lighting effect cycle generated by the controller.

17. The Steady-On Invention permits selectable steady-on and special lighting effect modes in a lighting product, without having to have special wires, other than two power conductors to the bulbs. '437 patent at 4:53-56.

Resistive Bypass Invention

18. Decorative lighting products are often connected in "series" in a string of lights, whereby electrical current flows from one light to the next in the circuit, end-to-end. A drawback to series connected decorative lighting strings is that when a

SAUL EWING LLP
1888 CENTURY PARK EAST, SUITE 1500
LOS ANGELES, CALIFORNIA 90067

lighting source, e.g., a bulb, is removed from the circuit, is burnt out, defective, or has a loose connection, the entire lighting circuit is rendered inoperable. See '252 patent at 1:26-45.

19. To address this drawback, lighting string manufactures utilize circuit bypasses to permit electrical current to continue to flow through the circuit even though after one or more bulbs in the lighting string have become inoperable. For example, U.S. Patent No. 5,886,423 to Gershon discloses a lighting string containing incandescent bulbs with a parallel solid state bypass circuit that conducts electricity only when the bulb becomes inoperable. When one or more bulbs in the Gershon system become inoperable, the bypass then permits current to bypass the inoperable lamp and flow to the remaining bulbs.

20. Drawbacks remain, however, with circuit bypasses. The solid state bypass circuit in Gershon creates no voltage load on the circuit, until engaged when a bulb in the circuit fails. When engaged, the bypass circuits like those described in Gershon provide insufficient resistance to that portion of the circuit bypassed. If enough bulbs fail, the circuit current will increase causing early failure of the remaining bulbs as too much current flows through the remaining bulbs, overheating them and causing them to prematurely fail.

21. Seasonal's engineers developed an improved circuit bypass that addresses problems in bypass circuits including a reduction in the cost, complexity, and size of the solid state bypass circuits. The invention is hereafter referred to as the "Resistive Bypass Invention." The Resistive Bypass Invention permits serially-connected LED lights to remain lit, after one or more bulbs become defective, burnt out, loose, or removed, by conducting current at all times when current is flowing through the circuit, regardless of whether the LED light sources are conducting current therethrough.

/ / /

/ / /

SAUL EWING LLP
1888 CENTURY PARK EAST, SUITE 1500
LOS ANGELES, CALIFORNIA 90067

PATENTS-IN-SUIT

Steady-On Patents

22. Seasonal has been awarded two patents relating to the Steady-On Invention: U.S. Patent No. 9,554,437 and U.S. Patent No. 10,080,265. Together the '437 and '265 patents are referred to as the "Steady-On Patents."

23. Seasonal is the assignee possessing all right, title and interest in the '437 patent, entitled "Decorative Light String Switchable Between Different Illumination States," which issued on January 24, 2017. A true and correct copy of the '437 patent is attached as **Exhibit A**. Seasonal has standing to sue for infringement of the '437 Patent.

24. The '437 patent includes independent claims 1 and 11. Illustrative claim 11 recites:

> 11. A method of switchably changing the function of a special function bulb controller to switch an illumination element between having visual appearance of steady-on and a visual appearance of a predetermined special visual function, comprising the steps of:
>
> a. electrically powering illumination element;
>
> b. in communication with said illumination element, controlling the flow of current to the element to produce a predetermined special illumination visual lighting effect in the illumination element, controlling said element so that when it is powered up starting with an initial steady on illuminated state in the element and then proceed to said special lighting effects occurring after the steady-on power up and periodically repeating said special lighting effect for a predetermined period of time, and
>
> c. periodically interrupt the flow of current to said illumination element, at an interruption frequency sufficient to cause the steady-on state without proceeding to said special lighting

effects, and thereby producing a plurality of steady-on illumination pulses in the illumination element.

25. Seasonal is also the assignee with all rights, title and interest in the '265 patent, entitled "Decorative Light String Switchable Between Different Illumination States," which issued on September 18, 2018. A true and correct copy of the '265 patent is attached as **Exhibit B**. Seasonal has standing to sue for infringement of the '265 patent.

26. The '265 patent includes independent claims 1 and 10. Illustrative claim 1 recites:

> 1. A system for switchably changing the function of a special function bulb controller to switch an illumination element between having visual appearance of steady-on and a visual appearance of a predetermined special visual function, comprising:
>
> a. an electrically powered illumination element;
>
> b. a first switching circuit in communication said illumination element for controlling the flow of current to the element, said first circuit containing a controller for controlling the power to said illumination element to produce a predetermined special illumination visual lighting effect in the illumination element, said first circuit initiating said lighting effect when powered up starting from an initial on illuminated state in the element and proceeding to other special lighting effects occurring after the on power up and periodically repeating said special lighting effect for a predetermined period of time, and
>
> c. a second switching circuit, configured to periodically interrupt the flow of current to said first circuit, at an interruption frequency sufficient to cause the first circuit to reset to its on state without proceeding to said other special lighting effects,

SAUL EWING LLP
1888 CENTURY PARK EAST, SUITE 1500
LOS ANGELES, CALIFORNIA 90067

and thereby producing a plurality of on illumination pulses in the illumination element, so that a viewer perceives the illumination element as always on.

27. Seasonal implemented the Steady-On Invention into lighting products that it has offered for sale and sold, and that practice the claims of the Steady-On Patents, including LED 3 Color Effect + twinkling light string products. Products practicing the Steady-On Patents have the advantage of easily switching between steady on and special lighting effects, such as twinkling, multi color and alternating stages of each.

28. Seasonal marked products using the patented invention with the numbers of the Steady-On Patents.

29. Seasonal promotes the advantages of the Steady-On Invention in packaging and descriptive materials for products practicing the claims of the Steady-On Patents. Products using the Steady-On Invention have been commercially successful. There is a connection between the commercial success of the products using the patented technology and the advantages provided by the Steady-On Invention, including efficiencies in not having to use additional wiring or higher cost addressable LEDs.

Resistive Bypass Patents

30. Seasonal has also been awarded two patents relating to the Resistive Bypass Invention: U.S. Patent No. 11,096,252 and U.S. Patent No. 11,533,794. Together the ’252 and ’794 patents are hereafter referred to the “Resistive Bypass Patents.”

31. Seasonal is the assignee possessing all right, title and interest in the ’252 patent, entitled “Resistive bypass for series lighting circuit,” which issued on August 17, 2021. A true and correct copy of the ’252 patent is attached as **Exhibit C**. Seasonal has standing to sue for infringement of the ’252 patent.

/ / /

SAUL EWING LLP
1888 CENTURY PARK EAST, SUITE 1500
LOS ANGELES, CALIFORNIA 90067

32. The ’252 patent includes independent claims 1 and 10. Illustrative claim 1 recites:

> 1. A resistor bypass circuit for a series lighting circuit comprising a plurality of serially connected LED light sources and a bypass resistor being connected in parallel with at least one of the respective light sources, said bypass resistor being in circuit and conducting current at all times when current is flowing through the circuit regardless of whether the LED light sources are conducting current therethrough and wherein said bypass resistor is capable operating on a one hundred percent duty cycle.

33. Seasonal is also the assignee with all rights, title and interest in the ’794 patent, entitled “Resistive bypass for series lighting circuit,” which issued on December 20, 2022. A true and correct copy of the ’794 patent is attached as **Exhibit D**. Seasonal has standing to sue for infringement of the '794 patent.

34. The ’794 patent includes independent claims 1, 10, and 15. Illustrative claim 1 recites:

> 1. A resistor bypass circuit for a lighting circuit comprising a plurality of serially connected LED light sources and a bypass resistor being connected in parallel with at least one of the respective light sources, said bypass resistor being in circuit and conducting current at all times across the light sources when current is flowing through the circuit regardless of whether the LED light sources are conducting current therethrough.

35. Seasonal implemented the Resistive Bypass Invention into lighting products that it has offered for sale and sold, and that practice the claims of the Resistive Bypass Patents.

36. Seasonal marked products using the patented invention with the numbers of the Resistive Bypass Patents.

SAUL EWING LLP
1888 CENTURY PARK EAST, SUITE 1500
LOS ANGELES, CALIFORNIA 90067

37. Seasonal promotes the advantages of the Resistive Bypass Invention in packaging and descriptive materials for products practicing the claims of the Resistive Bypass Patents. Products using the patented invention have been commercially successful. There is a connection between the commercial success of the products using the Resistive Bypass Invention and the advantages provided by an improved circuit for serially connecting LED lights that will continue to conduct electricity and keep the remainder of the series of lights lit even when one or more individual lighting elements are burnt out, defective, broken, or have a loose connection.

LEDUP'S INFRINGEMENT

Infringement of the Steady-On Patents

38. LEDup has introduced to the market, without Seasonal's authorization, decorative lighting products using the invention claimed in the Steady-On Patents, including the products sold under the name "7.5 ft. Starry Light Fraser Fir Flocked LED Pre Lit Artificial Christmas Tree" and "9 ft Starry Light Flocked Christmas Tree" (together the "Starry Light Trees"), and "7.5 ft Grand Duchess Balsam Fir Christmas Tree" ("Grand Duchess Trees") (collectively the "Pre-Lit Trees").

39. Information about LEDup's Pre-Lit Trees describes them as containing "3000 remote-operated LEDs" (Starry Light) and "2,250 color-changing LEDs" (Grand Duchess). Some of the LED lights on Pre-Lit Tree products are special illumination LEDs that have a predetermined on/off twinkling effect. The Pre-Lit Tree products have a mode selector connected to a circuit board that allows users to change between "Steady" or "Twinkle" modes for the special illumination LEDs.

40. Each special illuminating LED in the Pre-Lit Trees has an integrated circuit (IC) in it that constitutes a "first switching circuit." The IC is integrated into each LED unit, similar to the description in the Steady-On Patents. See '437 at patent 4:3-11. The IC controls power to the special illumination LEDs producing a predetermined visual lighting effect.

/ / /

SAUL EWING LLP
1888 CENTURY PARK EAST, SUITE 1500
LOS ANGELES, CALIFORNIA 90067

41. When the IC is initially powered up, each special illumination LED begins with a steady-on illumination state, followed by a twinkling (blinking) state for a period, before restarting the cycle by returning to the steady-on illumination, and then repeating the steady-on-to-twinkling cycle, for as long as power is maintained continuously.

42. The Pre-Lit Trees have a circuit board containing an IC that includes a function which constitutes a "second switching circuit." The IC on the circuit, which performs multiple functions when appropriately activated, is in communication with and controls flow of current to the ICs in the special illuminating LEDs (first circuits).

43. When a user selects "Steady" mode, the IC on the circuit board interrupts current to the IC in the special illumination LED (first switching circuit). The interruption in power causes the IC on the special illumination LED to reset the steady-on-to-twinkling cycle and return to a "Steady On" state.

44. When a user selects "Twinkle" mode, the IC (second circuit) allows uninterrupted (non-pulsing) DC to flow to allow the IC (first circuit) in the special illumination LED to operate normally and create an on/off repetitive function causing the lights to "twinkle."

45. LEDup has had knowledge of Seasonal's Steady-On Patents before the filing of this action. LEDup has had direct knowledge of the Steady-On Patents since receiving actual notice of infringement from Seasonal. LEDup has had constructive knowledge of the Steady-On Patents as a result of Seasonal marking products with the numbers of the patents.

46. Upon information and belief, LEDup has in the past and/or is currently offering for sale, importing into the United States, and inducing others to use within the United States, the Pre-Lit Trees that infringe each of the Steady-On Patents.

47. LEDup makes, offers for sale, sells, and imports the claimed Steady-On Invention and induces others, including Home Depot, to offer for sale, sell, and use the same.

SAUL EWING LLP
1888 CENTURY PARK EAST, SUITE 1500
LOS ANGELES, CALIFORNIA 90067

SAUL EWING LLP
1888 CENTURY PARK EAST, SUITE 1500
LOS ANGELES, CALIFORNIA 90067

48. LEDup undertook and continues its infringing actions despite that it knew and/or should have known that its actions constituted an unjustifiably high risk, and that its activities infringed the Steady-On Patents, which were duly issued and are presumed valid. For example, since at least receiving actual notice of infringement from Seasonal, LEDup has been aware of the unjustifiably high risk that its actions constituted and continue to constitute infringement of the Steady-On Patents, and that the Steady-On Patents are valid. On information and belief, LEDup could not reasonably, subjectively believe that its actions do not constitute infringement of the Steady-On Patents, and it could not reasonably, subjectively believe that the Steady-On Patents are invalid. Despite this knowledge and subjective belief, and the unjustifiably high risk that its actions constitute infringement, LEDup has continued its infringing activities. As such, LEDup willfully infringes the Steady-On Patents.

Infringement of the Resistive Bypass Patents

49. LEDup has also introduced to the market, without Seasonal's authorization, decorative lighting products using the invention claimed in the Resistive Bypass Patents, including the products described in the table below, hereafter referred to collectively as LEDup's "Light String" products.

Description	Retailer	Item #	UPC#	UL Listing
LED Advanced Holiday Lighting HD 150lt C5 PW Super Bright LED	Fleet Farm	SMT-S150/SC5	840092507076	(CSAus) 301004
LED Advanced Holiday Lighting HD 50lt C5 WW Super Bright LED	Fleet Farm	SMT-S50/SC5	840092507014	(CSAus) 301004
LED Advanced Holiday Lighting HD 50lt Mini PW Super Bright LED	Fleet Farm	SMT-S50/SM5	840092506987	(CSAus) 301004

Description	Retailer	Item #	UPC#	UL Listing
LED Advanced Holiday Lighting HD 50lt C5 Multi Super Bright LED	Fleet Farm	SMT-S50/SC5	840092507021	(CSAus) 301004
LED Advanced Holiday Lighting Color Change WW to Multi 28F 50lt C5 w/Remote	Fleet Farm	SMTF-S50/SC5	840092506949	(CSAus) 301004
LED Advanced Holiday Lighting Color Change RGB 52F 50lt Mini w/Remote	Fleet Farm	SMTF-S50/6MM	840092506956	(CSAus) 301004
LED Advanced Holiday Lighting HD 150lt Mini Multi Super Bright LED	Fleet Farm	SMT-S150/SM5	840092507007	(CSAus) 301004
LED Advanced Holiday Lighting HD 50lt G-18 WW HEAVY DUTY LED	Fleet Farm	SMT-S50	840092509322	(CSAus) 301004
LED Advanced Holiday Lighting HD 50lt G-18 MULTI HEAVY DUTY LED	Fleet Farm	SMT-S50	840092509339	(CSAus) 301004
LED Advanced Holiday Lighting HD 50lt C-5 PW HEAVY DUTY LED	Fleet Farm	SMT-S50	840092507052	(CSAus) 301004

SAUL EWING LLP
1888 CENTURY PARK EAST, SUITE 1500
LOS ANGELES, CALIFORNIA 90067

Description	Retailer	Item #	UPC#	UL Listing
Home Accents Holiday 50 WW Transparent C9 LED Lights Ultra Bright	Home Depot	1004363850 SMT-S50/SC9	840092500282	
Home Accents Holiday 100 MULTI Transparent C9 LED Lights Ultra Bright	Home Depot	1004385735 SMT-S100/SC9	840092500220	
100LT WW ULTRA BRIGHT STEADY LIT HEAVY DUTY TRANSPARENT C9 LED LIGHTS	Home Depot	1004 385 731	840092500282	CSA 229828
Home Accents Holiday 50 WW Transparent C9 LED Lights Ultra Bright	Home Depot	1004363850 SMT-S50/SC9	840092500213	CSAus
Home Accents Holiday 100 MULTI Transparent C9 LED Lights Ultra Bright	Home Depot	1004385735 SMT-S100/SC9	840092500299	301004
LED Advanced Holiday Lighting HD 150lt MINI PW HEAVY DUTY LED	Fleet Farm	SMT-S150	840092509315	CSAus

SAUL EWING LLP
1888 CENTURY PARK EAST, SUITE 1500
LOS ANGELES, CALIFORNIA 90067

Description	Retailer	Item #	UPC#	UL Listing
LED Advanced Holiday Lighting HD 150lt MINI WW HEAVY DUTY LED	Fleet Farm	SMT-S150	840092506994	301004
LED Advanced Holiday Lighting HD 150lt G-18 MULTI HEAVY DUTY LED	Fleet Farm	SMT-S150	840092509353	(CSAus) 301004
LED Advanced Holiday Lighting HD 150lt G-18 WW HEAVY DUTY LED	Fleet Farm	SMT-S150	840092509346	(CSAus) 301004
LED Advanced Holiday Lighting HD 150lt C-5 MULTI HEAVY DUTY LED	Fleet Farm	SMT-S150	840092507069	(CSAus) 301004
LED Advanced Holiday Lighting HD 150lt C-5 WW HEAVY DUTY LED	Fleet Farm	SMT-S150	840092507120	(CSAus) 301004
LED Advanced Holiday Lighting HD 50lt MINI MULTI HEAVY DUTY LED	Fleet Farm	SMT-S50	840092506970	(CSAus) 301004
LED Advanced Holiday Lighting HD 50lt MINI RED HEAVY DUTY LED	Fleet Farm	SMT-S50	840092507038	(CSAus) 301004

SAUL EWING LLP
1888 CENTURY PARK EAST, SUITE 1500
LOS ANGELES, CALIFORNIA 90067

Description	Retailer	Item #	UPC#	UL Listing
LED Advanced Holiday Lighting HD 50lt MINI BLUE HEAVY DUTY LED	Fleet Farm	SMT-S50	840092507045	(CSAus) 301004
LED Advanced Holiday Lighting HD 50lt MINI WW HEAVY DUTY LED	Fleet Farm	SMT-S50	840092506963	(CSAus) 301004

50. Information about LEDup's Light String products describes the them as containing a plurality of serially connected LED lights within an electrical circuit. The LED lights in the Light String products are connected in "series" because current flows from one light to the next in the circuit, end-to-end.

51. The circuit in the Light String products contains bypass resistors that permit the LED lights to "continu[ously] stay on even if a bulb burns out, is loose or is missing." The bypass resistors are "in parallel" to the current flowing to the LED lights because the resistors provide a second path for current to flow through the circuit.

52. Testing of the current flowing through the bypass resistor circuit in the LED lights shows that current flows through the bypass at all times when power is supplied to the Light String products, regardless of whether the LED light source is burnt out, removed, or otherwise not carrying current.

53. When power is supplied to the Light String products, current passes through the resistors at all times (100% duty cycle).

54. LEDup has had knowledge of Seasonal's Resistive Bypass Patents before the filing of this action. LEDup has had direct knowledge of the Resistive Bypass Patents since receiving actual notice of infringement from Seasonal. LEDup

SAUL EWING LLP
1888 CENTURY PARK EAST, SUITE 1500
LOS ANGELES, CALIFORNIA 90067

SAUL EWING LLP
1888 CENTURY PARK EAST, SUITE 1500
LOS ANGELES, CALIFORNIA 90067

has had constructive knowledge of the Resistive Bypass Patents because Seasonal marked products practicing the Resistive Bypass Invention with the numbers of the patents.

55. Upon information and belief, LEDup has in the past and/or is currently offering for sale, importing into the United States, and inducing others to use within the United States, Light String products that infringe each of the Resistive Bypass Patents.

56. LEDup makes, offers for sale, sells, and imports the claimed Resistive Bypass Invention and induces others, including Home Depot and Fleet Farm, to offer for sale, sell, and use the same.

57. LEDup undertook and continues its infringing actions despite that it knew and/or should have known that its actions constituted an unjustifiably high risk that its activities infringed the Resistive Bypass Patents, which were duly issued, and are presumed valid. For example, since at least receiving actual notice of infringement from Seasonal, LEDup has been aware of the unjustifiably high risk that its actions constituted and continue to constitute infringement of the Resistive Bypass Patents, and that the Resistive Bypass Patents are valid. On information and belief, LEDup could not reasonably, subjectively believe that its actions do not constitute infringement of the Resistive Bypass Patents, and it could not reasonably, subjectively believe that the Resistive Bypass Patents are invalid. Despite this knowledge and subjective belief, and the unjustifiably high risk that its actions constitute infringement, LEDup has continued its infringing activities. As such, LEDup willfully infringes the Resistive Bypass Patents.

COUNT I

INFRINGEMENT OF THE ’437 PATENT

58. Seasonal repeats the allegations in the preceding Paragraphs as if fully restated in Count I of this Complaint.

/ / /

59. **Direct Infringement.** LEDup has been and still is, directly infringing, either literally or under the doctrine of equivalence, at least one claim of the ’437 patent by importing, using, selling, and/or offering to sell in the United States, infringing products, including the Pre-Lit Trees.

60. The service of this Complaint upon LEDup constitutes actual knowledge of infringement as alleged here. The marking of products incorporating the Steady-On Patents constitutes constructive notice of infringement.

61. Despite such knowledge, LEDup continues to use, sell, offer for sale, and/or import into the United States, products that infringe the ’437 patent. On information and belief, LEDup continues to induce retailers, and end users and others, to sell and use the Pre-Lit Trees in the customary and intended manner that infringes the ’437 patent.

62. **Induced Infringement.** LEDup actively, knowingly, and intentionally has been and continues to induce infringement of the ’437 patent, literally or by the doctrine of equivalents, by selling the Pre-Lit Trees to customers, both retailers and end users, for sale and specific use in a manner that infringes one or more claims of the ’437 patent.

63. **Contributory Infringement.** LEDup actively, knowingly, and intentionally has been and continues to materially contribute to its own customers' infringement of the ’437 patent, literally or by the doctrine of equivalents, by selling the Pre-Lit Trees to its customers for sale and use by end users in a manner that infringes one or more claims of the ’437 patent. The Pre-Lit Trees are not staple articles of commerce suitable for substantial non-infringing use.

64. **Exhibit E** includes a chart comparing claims 1-6, 10 and 11 of the ’437 patent to LEDup’s Starry Light Tree products. As set forth in this chart, the Starry Light Tree products practice the technology claimed in the '437 patent.

65. Seasonal incorporates by reference the allegations in the claim chart in Exhibit E.

SAUL EWING LLP
1888 CENTURY PARK EAST, SUITE 1500
LOS ANGELES, CALIFORNIA 90067

SAUL EWING LLP
1888 CENTURY PARK EAST, SUITE 1500
LOS ANGELES, CALIFORNIA 90067

66. **Exhibit F** includes a chart comparing claims 1-7, 10 and 11 of the '437 patent to LEDup's Grand Duchess Tree product. As set forth in this chart, the Grand Duchess Tree products practice the technology claimed in the '437 patent.

67. Seasonal incorporates by reference the allegations in the claim chart in Exhibit F.

68. Seasonal has been damaged by LEDup's infringement of the '437 patent. Unless restrained and enjoined by this Court, LEDup will continue to infringe '437 patent, resulting in substantial, continuing, and irreparable damage to Seasonal.

69. Seasonal is further informed, and on this basis alleges, that LEDup's infringement of '437 patent has been and continues to be deliberate and willful, and, therefore, this is an exceptional case warranting an award of enhanced damages for up to three times the actual damages awarded and attorney's fees pursuant to 35 U.S.C. §§ 284-285. As noted above, LEDup has had knowledge of the '437 patent or at least was willfully blind to its infringement, and yet has deliberately continued to infringe in a wanton, malicious, and egregious manner, with reckless disregard for Seasonal's patent rights. Thus, LEDup's infringing actions have been and continue to be consciously wrongful.

70. Seasonal has complied with the notice requirements of 35 U.S.C. § 287(a) with respect to the '437 patent.

COUNT II

INFRINGEMENT OF THE '265 PATENT

71. Seasonal repeats the allegations in the preceding Paragraphs as if fully restated in Count II of this Complaint.

72. **Direct Infringement.** LEDup has been and still is, directly infringing, either literally or under the doctrine of equivalence, at least one claim of the '265 patent by importing, using, selling, and/or offering to sell in the United States, infringing products, including the Pre-Lit Trees.

73. The service of this Complaint upon LEDup constitutes actual knowledge

of infringement as alleged here. The marking of products incorporating the Steady-On Patents constitutes constructive notice of infringement.

74. Despite such knowledge, LEDup continues to use, sell, offer for sale, and/or import into the United States, products that infringe the ’265 patent. On information and belief, LEDup continues to induce retailers, and end users and others, to sell and use the Pre-Lit Tres in the customary and intended manner that infringes the ’265 patent.

75. **Induced Infringement.** LEDup actively, knowingly, and intentionally has been and continues to induce infringement of the ’265 patent, literally or by the doctrine of equivalents, by selling the Pre-Lit Trees to customers, both retailers and end users, for sale and specific use in a manner that infringes one or more claims of the ’265 patent.

76. **Contributory Infringement.** LEDup actively, knowingly, and intentionally has been and continues to materially contribute to its own customers' infringement of the ’265 patent, literally or by the doctrine of equivalents, by selling Pre-Lit Trees to its customers for sale and use by end users in a manner that infringes one or more claims of the ’265 patent. The Pre-Lit Trees are not staple articles of commerce suitable for substantial non-infringing use.

77. **Exhibit G** includes a chart comparing claims 1-7, 10 and 11 of the ’265 patent to LEDup’s Starry Light Tree product. As set forth in this chart, the Starry Light Tree product practices the technology claimed in the ‘265 patent.

78. Seasonal incorporates by reference the allegations in the claim chart in Exhibit G.

79. **Exhibit H** includes a chart comparing claims 1-7, and 10 of the ’265 patent to LEDup’s Grand Duchess Tree product. As set forth in this chart, the Grand Duchess Tree product practices the technology claimed in the ’265 patent.

80. Seasonal incorporates by reference the allegations in the claim chart in Exhibit H.

SAUL EWING LLP
1888 CENTURY PARK EAST, SUITE 1500
LOS ANGELES, CALIFORNIA 90067

SAUL EWING LLP
1888 CENTURY PARK EAST, SUITE 1500
LOS ANGELES, CALIFORNIA 90067

81. Seasonal has been damaged by LEDup's infringement of the '265 patent. Unless restrained and enjoined by this Court, LEDup will continue to infringe '265 patent, resulting in substantial, continuing, and irreparable damage to Seasonal.

82. Seasonal is further informed, and on this basis alleges, that LEDup's infringement of '265 patent has been and continues to be deliberate and willful, and, therefore, this is an exceptional case warranting an award of enhanced damages for up to three times the actual damages awarded and attorney's fees pursuant to 35 U.S.C. §§ 284-285. As noted above, LEDup has had knowledge of the '265 patent or at least was willfully blind to its infringement, and yet has deliberately continued to infringe in a wanton, malicious, and egregious manner, with reckless disregard for Seasonal's patent rights. Thus, LEDup's infringing actions have been and continue to be consciously wrongful.

83. Seasonal has complied with the notice requirements of 35 U.S.C. § 287(a) with respect to the '265 patent.

COUNT III

INFRINGEMENT OF THE 252 PATENT

84. Seasonal repeats the allegations in the preceding Paragraphs as if fully restated in Count III of this Complaint.

85. **Direct Infringement.** LEDup has been and still is, directly infringing, either literally or under the doctrine of equivalence, at least one claim of the '252 patent by importing, using, selling, and/or offering to sell in the United States, infringing products, including the Light String products.

86. The service of this Complaint upon LEDup constitutes actual knowledge of infringement as alleged here. The marking of products incorporating the Resistive Bypass Patents constitutes constructive notice of infringement.

87. Despite such knowledge, LEDup continues to use, sell, offer for sale, and/or import into the United States, products that infringe the '252 patent. On information and belief, LEDup continues to induce retailers, and end users and others,

to sell and use the Light String products in the customary and intended manner that infringes the ’252 patent.

88. **Induced Infringement.** LEDup actively, knowingly, and intentionally has been and continues to induce infringement of the ’252 patent, literally or by the doctrine of equivalents, by selling the Light String products to customers, both retailers and end users, for sale and specific use in a manner that infringes one or more claims of the ’252 patent.

89. **Contributory Infringement.** LEDup actively, knowingly, and intentionally has been and continues to materially contribute to its own customers' infringement of the ’252 patent, literally or by the doctrine of equivalents, by selling the Light String products to its customers for sale and use by end users in a manner that infringes one or more claims of the ’252 patent. The Light String products are not staple articles of commerce suitable for substantial non-infringing use.

90. **Exhibit I** includes a chart comparing claims 1, 2, 4, 8, and 10 of the ’252 patent to LEDup’s Light String products. As set forth in this chart, the Light String products practice the technology claimed in the ’252 patent. The allegations in Exhibit I are representative of the way in which each LEDup Light String product infringes the ’252 patent.

91. Seasonal incorporates by reference the allegations in the claim chart in Exhibit I.

92. Seasonal has been damaged by LEDup’s infringement of the ’252 patent. Unless restrained and enjoined by this Court, LEDup will continue to infringe ’252 patent resulting in substantial, continuing, and irreparable damage to Seasonal.

93. Seasonal is further informed, and on this basis alleges, that LEDup’s infringement of ’252 patent has been and continues to be deliberate and willful, and, therefore, this is an exceptional case warranting an award of enhanced damages for up to three times the actual damages awarded and attorney’s fees pursuant to 35 U.S.C. §§ 284-285. As noted above, LEDup has had knowledge of the ’252 patent or

SAUL EWING LLP
1888 CENTURY PARK EAST, SUITE 1500
LOS ANGELES, CALIFORNIA 90067

at least was willfully blind to its infringement, and yet has deliberately continued to infringe in a wanton, malicious, and egregious manner, with reckless disregard for Seasonal's patent rights. Thus, LEDup's infringing actions have been and continue to be consciously wrongful.

94. Seasonal has complied with the notice requirements of 35 U.S.C. § 287(a) with respect to the '252 patent.

COUNT IV

INFRINGEMENT OF THE '794 PATENT

95. Seasonal repeats the allegations in the preceding Paragraphs as if fully restated in Count IV of this Complaint.

96. **Direct Infringement.** LEDup has been and still is, directly infringing, either literally or under the doctrine of equivalence, at least one claim of the '794 patent by importing, using, selling, and/or offering to sell in the United States, infringing products, including the Light Strings.

97. The service of this Complaint upon LEDup constitutes actual knowledge of infringement as alleged here. The marking of products incorporating the Resistive Bypass Patents constitutes constructive notice of infringement.

98. Despite such knowledge, LEDup continues to use, sell, offer for sale, and/or import into the United States, products that infringe the '794 patent. On information and belief, LEDup continues to induce retailers, and end users and others, to sell and use the Light String Products in the customary and intended manner that infringes the '794 patent.

99. **Induced Infringement.** LEDup actively, knowingly, and intentionally has been and continues to induce infringement of the '794 patent, literally or by the doctrine of equivalents, by selling the Light String products to customers, both retailers and end users, for sale and specific use in a manner that infringes one or more claims of the '794 patent.

/ / /

SAUL EWING LLP
1888 CENTURY PARK EAST, SUITE 1500
LOS ANGELES, CALIFORNIA 90067

100. **Contributory Infringement.** LEDup actively, knowingly, and intentionally has been and continues to materially contribute to its own customers' infringement of the ’794 patent, literally or by the doctrine of equivalents, by selling the Light String products to its customers for sale and use by end users in a manner that infringes one or more claims of the ’794 patent. The Light String products are not staple articles of commerce suitable for substantial non-infringing use.

101. **Exhibit J** includes a chart comparing claims 1, 2, 4, 8, 10, and 15 of the ’794 patent to LEDup’s Light String products. As set forth in this chart, the Light String products practice the technology claimed in the ’794 patent. The allegations in Exhibit J are representative of the way in which each LEDup Light String product infringes the ’794 patent.

102. Seasonal incorporates by reference the allegations in the claim chart in Exhibit J.

103. Seasonal has been damaged by LEDup’s infringement of the ’794 patent. Unless restrained and enjoined by this Court, LEDup will continue to infringe ’794 patent resulting in substantial, continuing, and irreparable damage to Seasonal.

104. Seasonal is further informed, and on this basis alleges, that LEDup’s infringement of ’794 patent has been and continues to be deliberate and willful, and, therefore, this is an exceptional case warranting an award of enhanced damages for up to three times the actual damages awarded and attorney’s fees pursuant to 35 U.S.C. §§ 284-285. As noted above, LEDup has had knowledge of the ’794 patent or at least was willfully blind to its infringement, and yet has deliberately continued to infringe in a wanton, malicious, and egregious manner, with reckless disregard for Seasonal’s patent rights. Thus, LEDup’s infringing actions have been and continue to be consciously wrongful.

105. Seasonal has complied with the notice requirements of 35 U.S.C. § 287(a) with respect to the ’794 patent.

SAUL EWING LLP
1888 CENTURY PARK EAST, SUITE 1500
LOS ANGELES, CALIFORNIA 90067

SAUL EWING LLP
1888 CENTURY PARK EAST, SUITE 1500
LOS ANGELES, CALIFORNIA 90067

DEMAND FOR JUDGMENT

WHEREFORE, Seasonal Specialties demands judgment as follows:

A. That LEDup be adjudged to have infringed the ’437 patent;

B. That the ’437 patent be adjudged valid and enforceable;

C. That LEDup be adjudged to have infringed the ’265 patent;

D. That the ’265 patent be adjudged valid and enforceable;

E. That LEDup be adjudged to have infringed the ’252 patent;

F. That the ’252 patent be adjudged valid and enforceable;

G. That LEDup be adjudged to have infringed the ’794 patent;

H. That the ’794 patent be adjudged valid and enforceable;

I. An accounting of all damages not presented at trial;

J. Awarding Seasonal all appropriate damages under 35 U.S.C. § 284 for LEDup’s past infringement, and any continuing or future infringement of the Patents-in-Suit, up until the date such judgment is entered, including pre- or post-judgment interest, costs, and disbursements as justified under 35 U.S.C. § 284;

K. Declaring that LEDup’s infringement is willful and increasing the amount of damages by three times the amount assessed or found, as allowed pursuant to 35 U.S.C. § 284;

L. Declaring this case exceptional within the meaning of 35 U.S.C. § 285 and that Seasonal be awarded its reasonable attorneys’ fees against that it incurs in prosecuting this action;

M. Ordering that LEDup, its officers, and agents, servants, employees, and attorneys, and those persons in active concert or participation with them who received actual notice of the Order by personal service or otherwise, be preliminarily and permanently restrained from further infringement of the Patents-in-Suit; and

N. An award of such other further relief as this Court may deem just and proper.

JURY TRIAL DEMAND

Pursuant to Rule 38(b) of the Federal Rules of Civil Procedure and the Seventh Amendment to the Constitution of the United States, Seasonal hereby demands a trial by jury of all issues triable in the above action.

DATED: November 7, 2023 SAUL EWING LLP

By: */s/ Mark B. Mirzrahi*
MARK B. MIZRAHI
Attorneys for Plaintiff,
SEASONAL SPECIALTIES, LLC

SAUL EWING LLP
1888 CENTURY PARK EAST, SUITE 1500
LOS ANGELES, CALIFORNIA 90067

SAUL EWING LLP
1888 CENTURY PARK EAST, SUITE 1500
LOS ANGELES, CALIFORNIA 90067

Exhibit Index

Exhibit A: U.S. Patent No. 9,554,437

Exhibit B: U.S. Patent No. 10,080,265

Exhibit C: U.S. Patent No. 11,096,252

Exhibit D: U.S. Patent No. 11,533,794

Exhibit E: Chart comparing U.S. 9,554,437 with Starry Light Tree

Exhibit F: Chart comparing U.S. 9,554,437 with Grand Duchess Tree

Exhibit G: Chart comparing U.S. 10,080,265 with Starry Light Tree

Exhibit H: Chart comparing U.S. 10,080,265 with Grand Duchess Tree

Exhibit I: Chart comparing U.S. 11,096,252 with LEDup Light Strings

Exhibit J: Chart comparing U.S. 11,533,794 with LEDup Light Strings

EXHIBIT A

US009554437B2

(12) **United States Patent**
Altamura et al.

(10) **Patent No.: US 9,554,437 B2**
(45) **Date of Patent: Jan. 24, 2017**

(54) **DECORATIVE LIGHT STRING SWITCHABLE BETWEEN DIFFERENT ILLUMINATION STATES**

(71) Applicant: **Seasonal Specialties, LLC**, Eden Prairie, MN (US)

(72) Inventors: **Steven Altamura**, Scarsdale, NY (US); **Christine Werner**, St. Louis Park, MN (US); **Weng Yunbing**, Taizhou (CN); **Chen YongTai**, WenLin (CN)

(73) Assignee: **Seasonal Specialties LLC**, Eden Prairie, MN (US)

(*) Notice: Subject to any disclaimer, the term of this patent is extended or adjusted under 35 U.S.C. 154(b) by 0 days.

(21) Appl. No.: **14/879,351**

(22) Filed: **Oct. 9, 2015**

(65) **Prior Publication Data**

US 2016/0105937 A1 Apr. 14, 2016

Related U.S. Application Data

(60) Provisional application No. 62/061,836, filed on Oct. 9, 2014.

(51) **Int. Cl.**

H05B 39/09	(2006.01)
H05B 41/36	(2006.01)
F21S 10/00	(2006.01)
F21S 10/02	(2006.01)
H05B 33/08	(2006.01)

(52) **U.S. Cl.**
CPC ***H05B 33/0842*** (2013.01)

(58) **Field of Classification Search**
None
See application file for complete search history.

(56) **References Cited**

U.S. PATENT DOCUMENTS

5,749,646 A * 5/1998 Brittell F21S 10/02 362/231
5,871,271 A * 2/1999 Chien A42B 3/044 362/103

* cited by examiner

Primary Examiner — Douglas W Owens
Assistant Examiner — Dedei K Hammond
(74) *Attorney, Agent, or Firm* — Altera Law Group, LLC

(57) **ABSTRACT**

A system and method of creating a steady ON and a special effects light effect from a bulb without providing any special wiring thereto. In one embodiment, the bulb contains an illumination element and a controller which produces the special effect in the element. By interrupting the flow of current to the controller periodically, the controller is initialized to its initial steady ON condition. A plurality of steady ON pulses at a high frequency will appear as a steady ON light, instead of pules, thereby producing a steady ON appearance without special wiring. When the current is allowed to flow continuously, the controller produces the special effect. A second embodiment uses parallel polarized light element which produce different effect when power is applied in opposite polarities, thereby providing two effects with no special wiring.

11 Claims, 7 Drawing Sheets

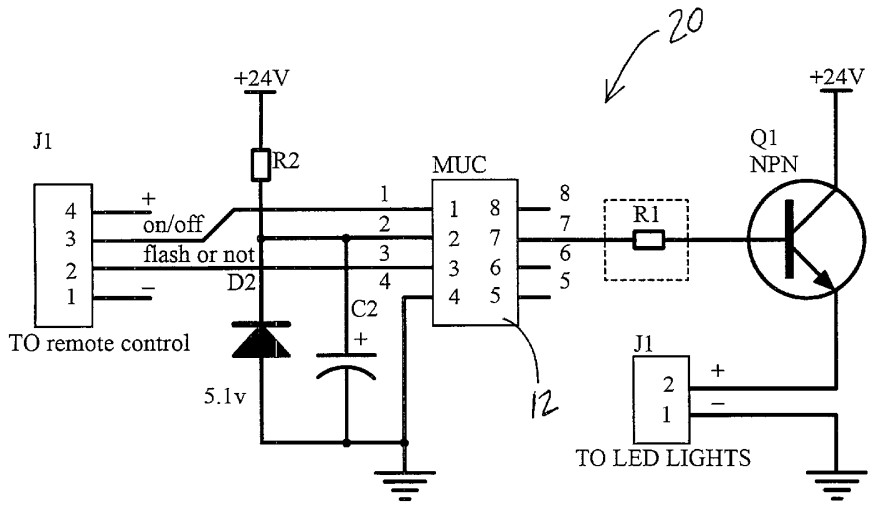

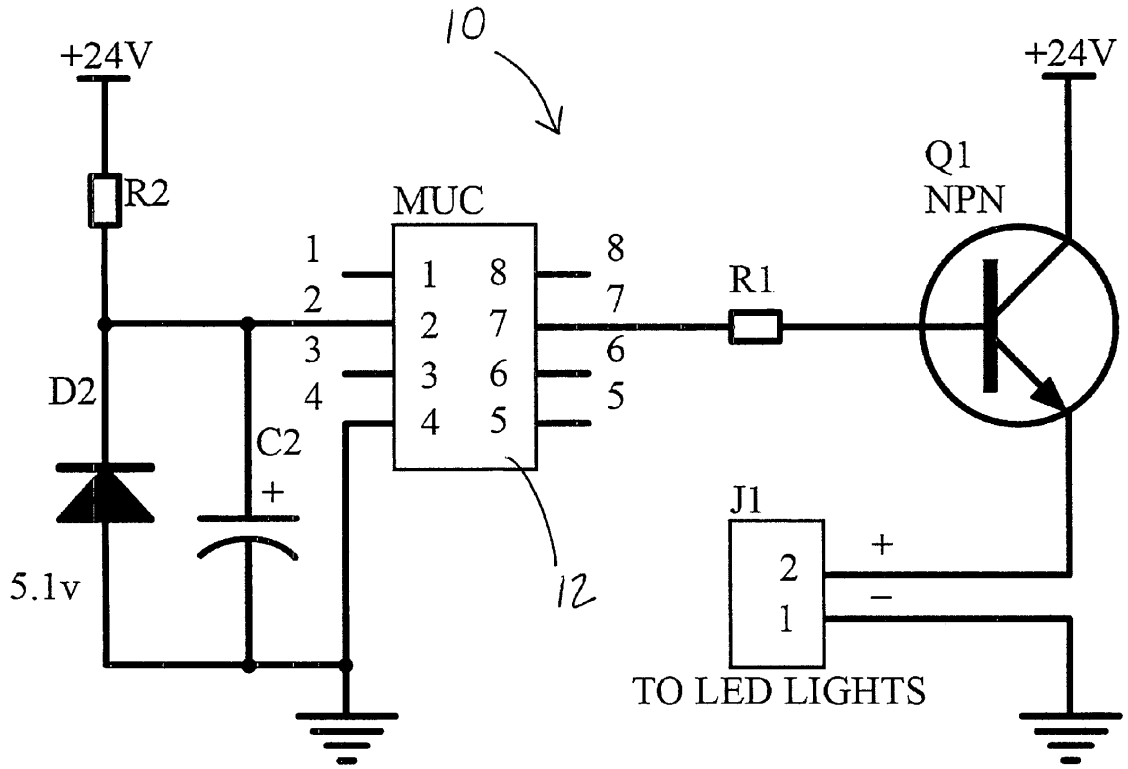
10
+24V
R2
MUC
1
2
3
4
1
2
3
4
8
7
6
5
8
7
6
5
R1
Q1
NPN
+24V
D2
C2
+
5.1v
12
J1
2
1
+
–
TO LED LIGHTS

Fig. 1

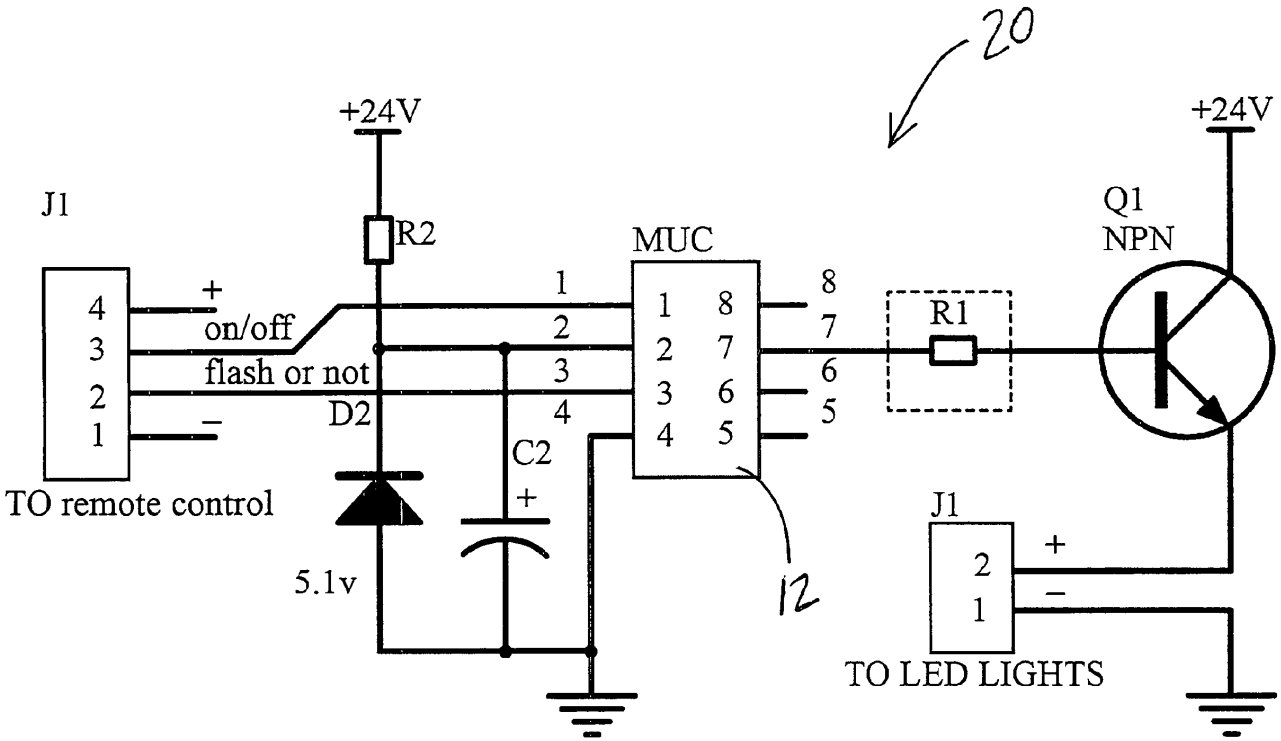
20
+24V
J1
R2
MUC
Q1
NPN
+24V
4
3
2
1
+
on/off
flash or not
–
D2
1
2
3
4
1 8
2 7
3 6
4 5
8
7
6
5
R1
C2
+
TO remote control
5.1v
12
J1
2
1
+
–
TO LED LIGHTS

Fig. 2

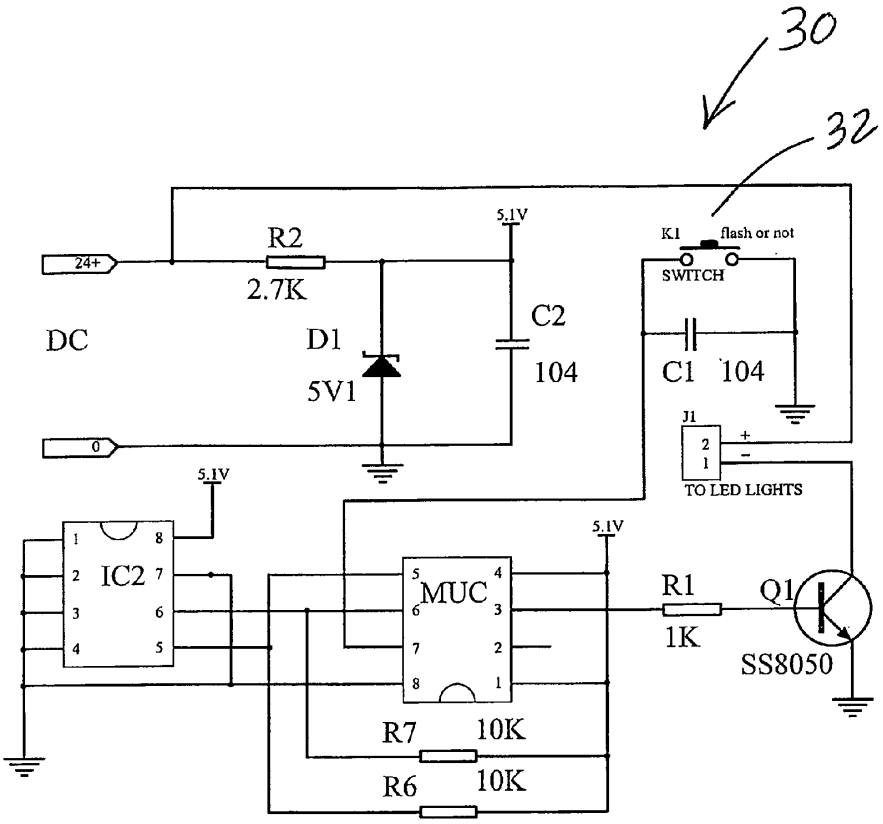
30
32
24+
R2
2.7K
5.1V
K1
flash or not
SWITCH
DC
D1
5V1
C2
104
C1
104
0
J1
2
1
TO LED LIGHTS
5.1V
IC2
MUC
5.1V
R1
1K
Q1
SS8050
R7
10K
R6
10K

Fig. 3

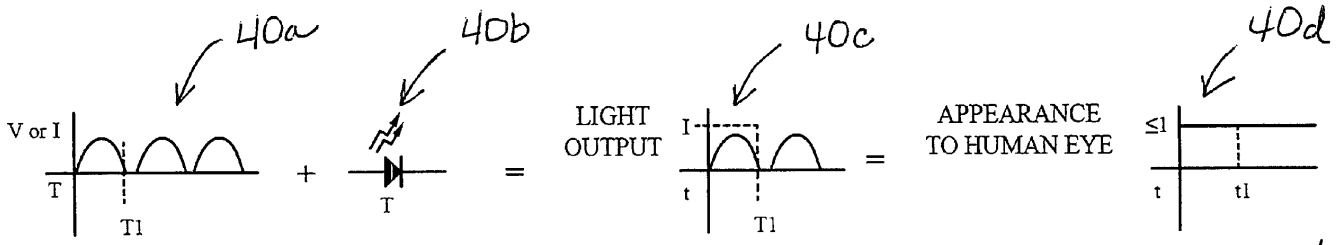
40a
40b
40c
40d
V or I
T
T1
+
T
=
LIGHT
OUTPUT
I
t
T1
=
APPEARANCE
TO HUMAN EYE
≤1
t
t1

Fig. 4a

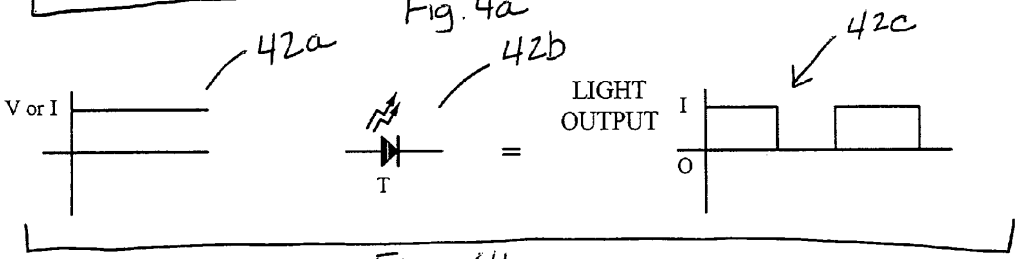
42a
42b
42c
V or I
T
=
LIGHT
OUTPUT
I
O

Fig. 4b

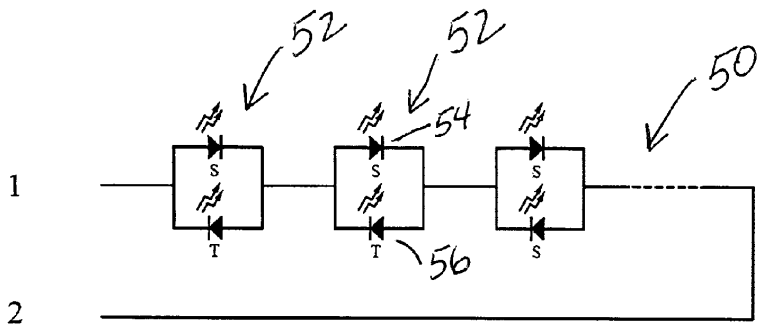

Fig. 5

1	2	CONDITION
+	−	ALL STEADY ON
−	+	SOME OR ALL TWINKLE

Fig. 6

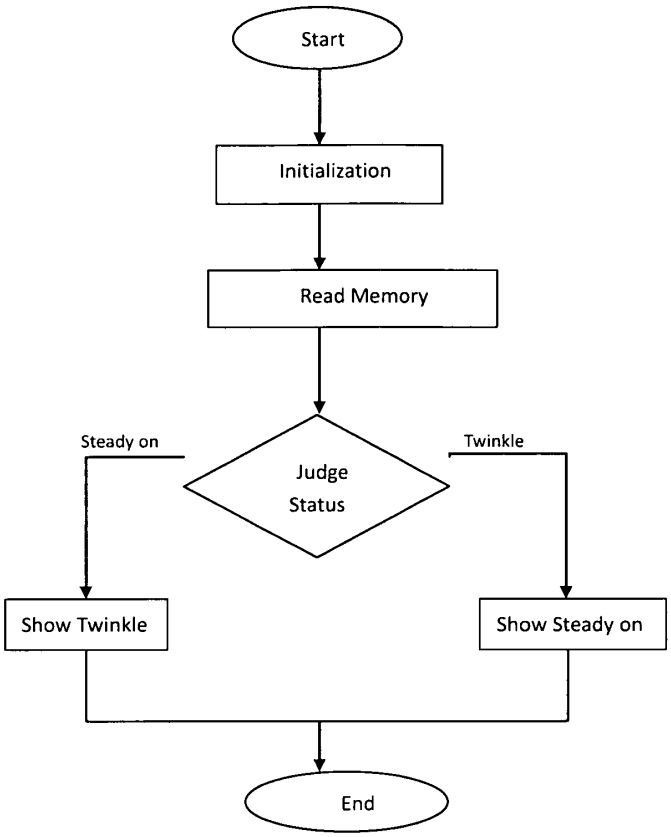
Start
Initialization
Read Memory
Steady on
Twinkle
Judge Status
Show Twinkle
Show Steady on
End

Figure 7

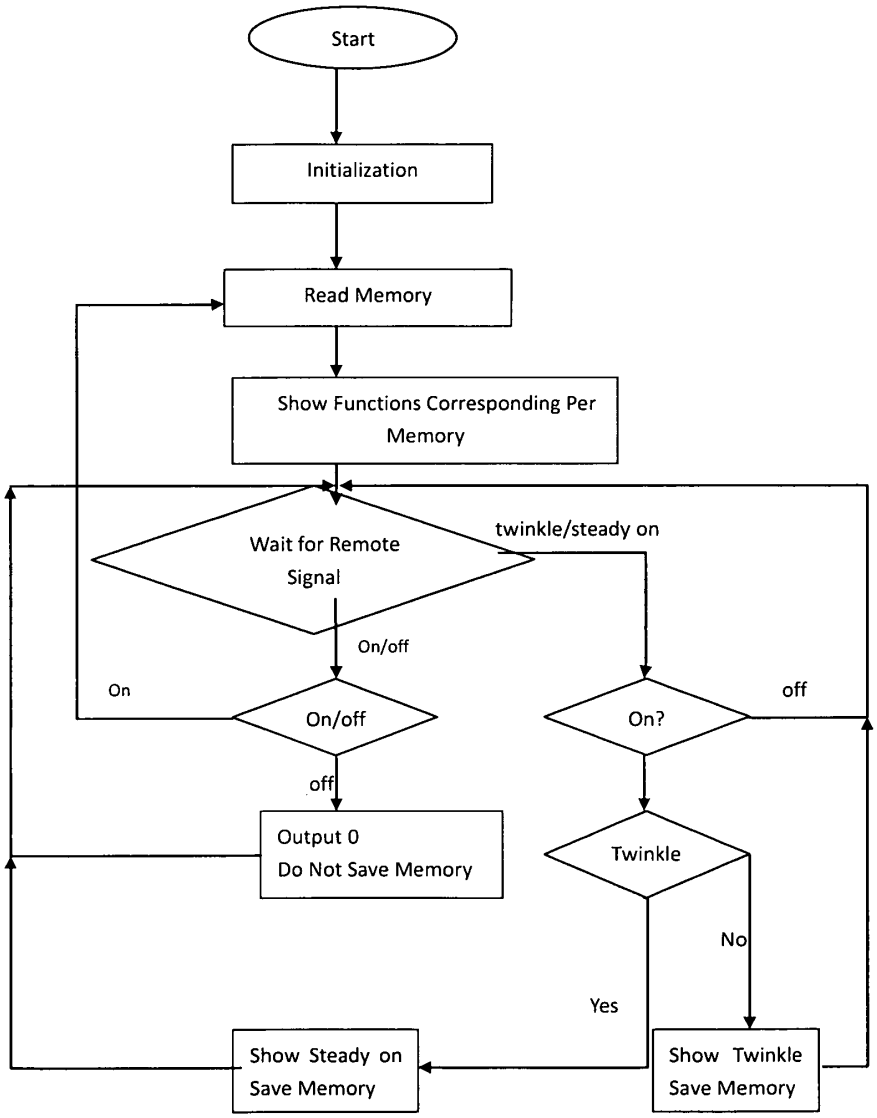
Start
Initialization
Read Memory
Show Functions Corresponding Per Memory
Wait for Remote Signal
twinkle/steady on
On/off
On
On/off
off
On?
off
Output 0
Do Not Save Memory
Twinkle
No
Yes
Show Steady on Save Memory
Show Twinkle Save Memory

Fig. 8

DECORATIVE LIGHT STRING SWITCHABLE BETWEEN DIFFERENT ILLUMINATION STATES

INCORPORATION BY REFERENCE

This application incorporates by reference in its entirety provisional application Ser. No. 62/061,836 filed 9 Oct. 2014 entitled Convertible Twinkle Light String Switchable To Steady-On Light String for which it also claims priority.

TECHNICAL FIELD

This disclosure relates to decorative lighting strings of lights having a plurality of bulbs spaced along the string.

BACKGROUND

Decorative lighting, such as holiday lighting includes strings of bulbs spaced out along a pair of wires. The bulbs may be incandescent or now more frequently, LEDs. Light strings can be made much more interesting if they can switch illumination state, color, or other special effects. Twinkling is particularly attractive. Twinkling or flashing as the bulbs change from on to off, at different frequencies or different illumination slopes to give the visual impression that the bulbs are shimmering.

To create these special effects, the bulbs can be directly wired to a power source which controls the current flow in such a way as to pulse/twinkle or create other special lighting effects. To control bulbs in such a manner, would either require multiple conductors to each bulb for individual control or multiple conductors creating different circuits to alternatingly spaced bulbs to create simulate random sequencing of changing color, shimmering, or flashing.

Alternatively, the bulbs may contain their own microcontroller built into each or some of the bulbs or lamp holders, such that normal wiring can be used, however, the disadvantage to this construction is that the user is not able to select the mode of those lights, such as all being steady illuminating in one mode, and another mode where they perform their intended function of the microcontroller electrically connected to those individual bulbs.

In an alternative construction, bulbs may include addressable circuits which allow digital control signals to be sent to all bulbs in a wired string, and the signal intended by a particular bulb can be decoded by IP or other addressing, to control only that bulb. Such an addressable solution is expensive because it requires advanced logic be provided at the power source and each bulb must have a decoder.

Therefore, to obtain the benefits of control of function and illumination method of bulbs without additional wiring, sophisticated, or expensive circuits has not been possible.

It has been shown in the market that people would like the option to have single light set that can offer both a steady on lighting effect and other lighting effects, such as a twinkling effect that can be user selected, so that depending on the mood of the user, or event, the lights can either be set to be steady on or twinkle, color changing, or other switchable effects.

Twinkling can be described as a change in brightness (ramping up/down, dimming) or a switching on/off and changing the frequency of the switching or both including the separate control of red, green and blue LEDs in a single lamp structure to create color changing effects that include fading or flashing.

SUMMARY

The following summary is intended to assist the reader in understanding the full disclosure and the claims. The claims define the scope of the invention, not this summary.

There is disclosed a system for switchably changing the function of a special function bulb controller to switch an illumination element between having visual appearance of steady-on and a visual appearance of a predetermined special visual function, having

a. an electrically powered illumination element;

b. a first switching circuit in communication said illumination element for controlling the flow of current to the element, said first circuit containing a controller for controlling the power to said illumination element to produce a predetermined special illumination visual lighting effect in the illumination element, said first circuit initiating said lighting effect when powered up starting from an initial steady on illuminated state in the element and then proceeding to other special lighting effects occurring after the steady on power up and periodically repeating said special lighting effect for a predetermined period of time; and

c. a second switching circuit in communication with said first circuit, configured to periodically interrupt the flow of current to said first circuit, at an interruption frequency sufficient to cause the second circuit to reset to its steady on state without proceeding to said other special lighting effects, and thereby producing a plurality of steady on illumination pulses in the illumination element.

Also disclosed is wherein said interruption frequency is at least sufficient to create the visual appearance in the illumination element of a steady on light.

Also disclosed is wherein said interruption frequency is at least sufficient to provide a plurality of light pulses from the illumination element which appear of substantially uniform intensity.

Also disclosed is wherein said interruption frequency is at least beyond the frequency of a human to observe flicker in the illumination element.

Also disclosed is wherein said interruption frequency includes periodically energizing and reenergizing the second circuit to at least sufficiently create the visual appearance in the illumination element of a steady on illumination.

Also disclosed is wherein said special function is a twinkle light effect.

Also disclosed is wherein said special function is a blinking light effect.

Also disclosed is wherein said special function is a color changing effect.

Also disclosed is wherein said special function is a color hue changing effect.

Also disclosed is wherein steady on includes a momentary illumination at a substantially uniform light output.

Also disclosed is a system for switchably converting a special effect lighting system to switch from a steady on light output to a special effect light output having

a. a light string including:

1. a first illumination element which illuminates when energized when powered in a first polarity and not a second opposite polarity;

2. a second illumination element connected in parallel with said first element and configured to output light with a special lighting effect when power is applied in the second polarity only;

b. a switching circuit connected to said elements, said circuit applying power to said string in said first polarity so only said first element will illuminate, and, then apply power in said second polarity, thereby illuminating only said second illumination element with said special effect.

Also disclosed is wherein said first element illuminates when power is applied in either polarity.

Also disclosed is wherein said first and second elements illuminate alternately when Alternating Current (AC) power is applied thereto.

Also disclosed is wherein the circuit is a reversing switch.

Also disclosed is wherein said special effect is light twinkling.

Also disclosed is wherein said special effect is color changing.

Also disclosed is wherein said special effect is color hue changing.

Also disclosed is a method of switchably changing the function of a special function bulb controller to switch an illumination element between having visual appearance of steady-on and a visual appearance of a predetermined special visual function, having any or all of the steps of in any order:

a. electrically powering illumination element;

b. in communication said illumination element, controlling the flow of current to the element to produce a predetermined special illumination visual lighting effect in the illumination element, controlling said element so that when it is powered up starting with an initial steady on illuminated state in the element and then proceed to said special lighting effects occurring after the steady on power up and periodically repeating said special lighting effect for a predetermined period of time, and

c. periodically interrupt the flow of current to said first circuit, at an interruption frequency sufficient to cause a steady on state without proceeding to said special lighting effects, and thereby producing a plurality of steady on illumination pulses in the illumination element.

BRIEF DESCRIPTION OF THE FIGURES

FIG. **1** illustrates an exemplary circuit **10** for which can be connected to light string (not shown) at connector J**1**.

FIG. **2** shows an alternative circuit **20** which is differs from FIG. **1** in that it has an input for a wired or wireless remote control at connector.

FIG. **3** shows a further variant **30** of the circuit in FIG. **2** with a switch **32** to control whether the reset pulses are sent or not.

FIGS. **4***a* and **4***b* illustrate a group of sub figures which illustrate the visual effect.

FIG. **5** illustrates the light string **50**.

FIG. **6** illustrates the power conditions and results.

FIG. **7** is a flow chart of the MCU/MUC controller in FIG. **1** and FIG. **2**.

FIG. **8** is a flow chart of the MCU/MUC controller in FIG. **2** and FIG. **3**.

DETAILED DESCRIPTION

Embodiment 1

In this embodiment, a light string can be controlled to operate specially configured bulbs to switch from one state to another without the need to reverse polarity of the power supply, adding additional control wires, or use of addressable bulbs and a controller. A "bulb" in this instance is an illumination element, such as an LED, incandescent lamp or equivalent which produces light in response to electrical current. It may also include a circuit or chip which controls the function of the illumination element. The two may be combined into a single unit or physically separated. The chip may be integral to the illumination element, in a socket for the element or entirely separated though electrically connected.

The "state" switching can be from on to off, or special effects versions thereof, such as twinkling, pulsing, flashing or other brightness varying effects, color changing, hue changing or other optical effects as determined by the type of control circuits and bulb types provided.

It is possible to include mixture of state controllable/switching bulbs with standard non switching bulbs since the visual effect can be achieved with less than all bulbs being controlled.

More generally, there is disclosed a system for switchably changing the function of a special function bulb controller to switch an illumination element between having visual appearance of steady-on and a visual appearance of a predetermined special visual function, having an electrically powered illumination element and a first switching circuit in communication said illumination element for controlling the flow of current to the element. The first circuit containing a controller for controlling the power to said illumination element to produce a predetermined special illumination visual lighting effect in the illumination element. The first circuit preferably is configured to power up starting from an initial steady on illuminated state, even for a brief period of time at a relatively uniform level of illumination. Then the rest of the special lighting effects are generated by the controller after the steady on power up the special effects are periodically repeated.

There is preferably a second switching circuit in communication with said first circuit, configured to periodically interrupt the flow of current to said first circuit, at an interruption frequency (i.e. on/off switching rate) sufficient to cause the second circuit to reset to its steady on state without or generally before the controller proceeds to the other special lighting effects. By using a switching (on/off) frequency at least higher than what the human eye can perceive as a pulse, the switching will produce a plurality of steady on illumination pulses in the illumination element, but the user will see a substantially steady light. When the second circuit provides a steady current, the illumination elements will produce their special effects, such as twinkling, according the predetermined configuration of the controller.

Thus, no special wires are required to provide these two controller states other than two power conductors to the bulbs.

The interruption frequency is at least sufficient to provide a plurality of light pulses from the illumination element which appear of substantially uniform intensity. The steady on period can also be a period where the intensity is gradually diminishing, but in a train of pulses, it will be seen by a human viewer as steady on.

The preferred interruption frequency is at least beyond the frequency of a human to observe flicker in the illumination element.

In this embodiment, the state switchable bulbs include a circuit which controls the current to the illumination element (usually an LED) to cause the desired effect. Such a circuit

includes a timing device which repeats the special effect on a cyclical basis, the effect being triggered by the timer. If the current is continuously applied to that bulb, the circuit will continuously produce the special effect (such as twinkling and/or color changing) by cycling through preprogrammed steps of changing the current supplied to the illumination element. By interfering with the cycle, it is possible to have such a circuit act as if it was not producing the special effect, but rather, attempting to initialize the effect, by repeatedly being restarted. This is accomplished by sending a reset signal to the circuit, making it think that it must restarted from its beginning state (such as on or a specific starting color/hue) and before it can proceed to the special effect state (such as dimming, color/hue change), sending another reset signal/pulse to the circuit. This has the effect of restarting the circuit from its initial state again. By repeatedly sending a reset pulse, the effect is either a continuous unchanged light output, or a series of short on pulses of light, with short off periods therebetween. The visual effect by a human viewer is that the light is on continuously due to the slow reaction time of the human eye and integration of the light over time. It is also possible to reset the special effects timer in the circuit, by disconnecting and reconnecting power to the entire circuit. This will have the effect of a reset since the circuit will reinitialize in a start state every time it receives power from a zero power state and initiate a timing sequence to restart from on state. The frequency of reset signals required will depend on the circuit construction, but for some devices a 50-60 Hz reset pulse rate has proven effective in creating the visual effect on an always on state while for other devices the required pulse rate may be several kilohertz, such as 50-60 kHz. In the preferred embodiment, using a bulb having a chip made by Zhejiang Newday Photoelectric Technology Co., Ltd.

Model YL11, Linhai, Taizhou City, China, the preferred pulse rate is 60 hz or at least 60 hz, but not more than 1 kHz. With other chips, the preferred range is at least as high as needed to prevent flicker being perceived by a human viewer, typically 60+ Hz and less than the maximum switching rate of the chip, in this case approximately 1 kHz. Above the switching rate, the reset to the initialization (start) state may not be reliable.

Voltage or current changes or both are sent in pulses to the bulbs, at a rate that is quick enough to reset the circuit/micro IC inside the twinkle LED that causes it to twinkle. By doing this it tricks the twinkle LED and IC into not turning on and off as the IC keeps resetting so that the LED appears that it is steady illuminating. The pulses happen so quickly that the human eye is not able to detect the bulb is flashing, similar to operation of an LED light set on 60 Hz without rectification where the human eye integrates the light and thinks it is steady on. In this disclosure, it could be as slow as 50-60 Hz, but will be fast enough to reset the micro IC in the twinkle LED to keep it from turning off long enough that the human eye will detect it and cause it to appear as in a steady-on state. During this pulsed voltage and or current sequence, if not fast enough it may appear that the lights are slightly dimmer than when steady on, but if fast enough will appear at the same brightness as when operating on normal power. Both states can be preferential depending on the lighting effect desired by the lighting designer.

To cause the set to twinkle (or other special effect), one would either have to slow down the pulses so that the IC only resets during the normal off period of the twinkle LED or provide a filtered or unfiltered DC or rectified AC power to the LEDs. This can be done with a range of voltages and power sources such as low voltage transformers or direct line voltage and frequency with or without frequency altering circuitry or periodic alternating the current or voltage.

This pulsing voltage or current can be performed a variety of ways including pulse with modulating circuit (PWM) or other methods to create a pulsed output quick enough to reset the circuit/IC in the twinkling or other special effect LED.

Bulbs can be wired in series or parallel, or in series parallel combinations and operated at line voltage or low voltage.

This embodiment uses the same amount of wire and LEDs as a regular set, only adding a low cost controller to the set, saving on the extra wires, larger bundles, heavier sets, higher cost, reduces the resources needed to manufacture such a set and makes it easier to decorate with than existing products, or the high cost of addressable circuitry on each bulb, a separate data wire, and a processor to send signals to control each bulb. So resetting of the chip trigger occurs when the chip associated with the illumination element is powered up. When the chip receives current, it will always start from a high brightness/color/hue etc. condition and then switch to lesser light output, in accordance with the predetermined special effect function, and then the brightness/hue/color rise/change again. By repeatedly applying power to the chip, the chip resets to its initialized state which is high illumination (or other special effects) so that the chip illuminates the element in its start or high illumination mode.

An alternative construction uses a chip which can decode a modulated signal to cause the reset. This is more complex, but if a modulated reset signal is sent to the chip on top of the power, the chip will reset but in this embodiment the chip could remain powered up at all times, instead of flashing, albeit rapidly. The illumination element will not pulse at all.

FIG. **1** illustrates an exemplary circuit **10** for which can be connected to light string (not shown) at connector J**1**. The light string can be a series or parallel wired bulbs (illumination elements+circuit components). It is only necessary that each bulb receives current to operate the illumination element and circuit.

The MUC/MCU microcontroller unit, IC chip **12** is of a type known in the art for supplying and controlling current to the light string at j**1**. The function of the chip is explained in the flow chart in FIG. **7**. Output pin **7** is PWM output.

FIG. **2** shows an alternative circuit **20** which differs from FIG. **1** in that it has an input for a wired or wireless remote control at connector J**2** which will switch power on/off, and "flash" (i.e. special effects) on/off. The flash switch activates IC **12** to send rapid reset pulses to the bulb strings connected at J**1** so that the special effects timers in the bulbs is rapidly reset thereby appearing to generate a contact on appearance by preventing the "twinkle" effect from occurring in the bulbs.

FIG. **3** shows a further variant **30** of the circuit in FIG. **2** with a switch **32** to control whether the reset pulses are sent or not. FIG. **8** is a flow chart of the MCU/MUC controller in FIG. **3**. Output pin **3** is the PWM output.

FIGS. **4***a* and **4***b* illustrate a group of sub figures which illustrate the visual effect. Illustration **40***a* shows a varying voltage or current input to the bulb light string. A pure DC input is also possible. Illustration **40***b* is a schematic illustration on a bulb which in this case is an LED with a twinkle chip incorporated therein. This circuit/chip has been discussed previously as one commercially available and which provides a special effect on the illumination element when power is continuously applied to the chip. Twinkle, pulse, color, hue and other effects are available.

Illustration **40***c* is the actual light output at the illumination element when the special effect chip is reset at a rate fast enough to prevent the chip from executing its normal special effect. The light output mimics the power input, as if the chip was non-existent. The result, shown in illustration **40***d*, is that the human view perceives the light output as steady. This is from a chip which has no special provision for producing a steady light output, but the rapid resetting of the chip function has effectively "tricked" the chip and hence the viewer into seeing solid illumination when it should be providing some other special effect.

FIG. **4***b* show the "normal" result of the special effect chip in the light string when continuous current is applied at **42***a*. The bulb **42***b* produces some special effect, in this case pulsing or twinkling as shown in **42***c*.

Embodiment 2

Embodiment 2 provides a similar result to the first embodiment but employs an entirely different solution. FIG. **5** illustrates the light string **50** and FIG. **6** illustrates the power conditions and results. In FIG. **5** a plurality of bulbs **52** (circuit elements and illumination elements combined) are shown in series, though parallel or a combination of series/parallel is equally possible. Bulbs **52** combine elements **54** "S", solid or always on LED with element **56** "t" a twinkle LED with twinkle (or other special function) circuit. Note that they are in parallel with reverse polarity. That means when power is applied in one direction, the **54** element will illuminate, but in with reverse power, the other element **56** will illuminate but with special function. FIG. **6** illustrates polarity and the result.

Thus, to make this circuit produce special effects, the polarity of the power need only be reversed. Of course, a mixture of T and S bulbs can be provided in the light string **50** to produce assorted outputs.

Alternatively, on inputs 1 and 2, a low frequency power source could be applied to provide a combination effect of the steady illuminating light source and the special effect light source at the same time. In other words, if AC is applied to inputs 1-2, the result will be the same as reversing polarity. The positive and negative wave forms will provide the reversing of polarity. In such case, the special effect is controlled by the frequency of the waveform.

Each bulb could be an LED and chip in the same housing, or in two separate housings next to each other to give the appearance when lit of one bulb, or combined in a refractive or translucent cover.

The bulb pairs can be wired in parallel or in series to other bulb pairs.

A simple controller or mechanical switching device is needed to be able to reverse the polarity of the bulb pairs so that one the polarity is in one direction, the set illuminates steady on, and when in the other direction, the set has a twinkle or other special effect function to it.

In first direction, all steady on bulbs are properly biased for current flow, while the twinkle bulbs are reversed biased.

In the other direction, all twinkle bulbs are properly biased for current flow. Depending on the application, if not all the bulbs were intended to twinkle, some of the twinkle bulbs could be substituted with steady on bulbs to create the effect desired.

This method uses the same amount of wire a regular set, adding a second set of LEDs and a low cost controller, saving on the extra wires, larger bundles, heavier sets, higher cost, reduces the resources needed to manufacture such a set and makes it easier to decorate with than existing products, or the high cost of addressable circuitry on each bulb, a separate data wire, and a processor to send signals to control each bulb.

For both embodiments the user selector of the operational mode (all steady on or all/partial twinkle/special effect) can be a variety of methods, including, but not limited to a selector switch, remote control, wireless control (WiFi, Bluetooth, ZigBee, etc.), app control, sound actuated, motion actuated, gesture actuated, etc.

The description of the invention and its applications as set forth herein is illustrative and is not intended to limit the scope of the invention. Variations and modifications of the embodiments disclosed herein are possible and practical alternatives to and equivalents of the various elements of the embodiments would be understood to those of ordinary skill in the art upon study of this patent document. These and other variations and modifications of the embodiments disclosed herein may be made without departing from the scope and spirit of the invention.

The invention claimed is:

1. A system for switchably changing the function of a special function bulb controller to switch an illumination element between having visual appearance of steady-on and a visual appearance of a predetermined special visual function, comprising:

a. an electrically powered illumination element;

b. a first switching circuit in communication said illumination element for controlling the flow of current to the element, said first circuit containing a controller for controlling the power to said illumination element to produce a predetermined special illumination visual lighting effect in the illumination element, said first circuit initiating said lighting effect when powered up starting from an initial steady-on illuminated state in the element and then proceeding to other special lighting effects occurring after the steady-on power up and periodically repeating said special lighting effect for a predetermined period of time, and

c. a second switching circuit in communication with said first circuit, configured to periodically interrupt the flow of current to said first circuit, at an interruption frequency sufficient to cause the second circuit to reset to its steady on state without proceeding to said other special lighting effects, and thereby producing a plurality of steady-on illumination pulses in the illumination element.

2. The system of claim **1** wherein said interruption frequency is at least sufficient to create the visual appearance in the illumination element of a steady-on light.

3. The system of claim **2** wherein said interruption frequency is at least sufficient to provide a plurality of light pulses from the illumination element which appear to have substantially uniform intensity.

4. The system of claim **2** wherein said interruption frequency is at least more than the frequency of a human eye to observe flicker in the illumination element.

5. The system of claim **2** wherein said interruption frequency includes periodically energizing and reenergizing the second circuit to at least sufficiently to create the visual appearance in the illumination element of a steady-on illumination.

6. The system of claim **2** wherein said special visual function is a twinkle light effect.

7. The system of claim **2** wherein said special visual function is a blinking light effect.

8. The system of claim **2** wherein said special visual function is a color changing effect.

9. The system of claim **2** wherein said special visual function is a color hue changing effect.

10. The system of claim **2** wherein steady-on includes a momentary illumination at a substantially uniform light output.

11. A method of switchably changing the function of a special function bulb controller to switch an illumination element between having visual appearance of steady-on and a visual appearance of a predetermined special visual function, comprising the steps of:

a. electrically powering illumination element;

b. in communication with said illumination element, controlling the flow of current to the element to produce a predetermined special illumination visual lighting effect in the illumination element, controlling said element so that when it is powered up starting with an initial steady on illuminated state in the element and then proceed to said special lighting effects occurring after the steady-on power up and periodically repeating said special lighting effect for a predetermined period of time, and

c. periodically interrupt the flow of current to said illumination element, at an interruption frequency sufficient to cause the steady-on state without proceeding to said special lighting effects, and thereby producing a plurality of steady-on illumination pulses in the illumination element.

* * * * *

EXHIBIT B

US010080265B2

(12) **United States Patent**
Altamura et al.

(10) **Patent No.: US 10,080,265 B2**
(45) **Date of Patent: *Sep. 18, 2018**

(54) **DECORATIVE LIGHT STRING SWITCHABLE BETWEEN DIFFERENT ILLUMINATION STATES**

(71) Applicant: **Seasonal Specialties, LLC**, Eden Prairie, MN (US)

(72) Inventors: **Steven Altamura**, Scarsdale, NY (US); **Christine Werner**, St. Louis Park, MN (US); **Weng Yunbing**, Taizhou (CN); **Chen YongTai**, WenLin (CN)

(73) Assignee: **Seasonal Specialties, LLC**, Eden Prairie, MN (US)

(*) Notice: Subject to any disclaimer, the term of this patent is extended or adjusted under 35 U.S.C. 154(b) by 0 days.

This patent is subject to a terminal disclaimer.

(21) Appl. No.: **15/412,441**

(22) Filed: **Jan. 23, 2017**

(65) **Prior Publication Data**

US 2017/0135168 A1 May 11, 2017

Related U.S. Application Data

(63) Continuation of application No. 14/879,351, filed on Oct. 9, 2015, now Pat. No. 9,554,437.

(60) Provisional application No. 62/061,836, filed on Oct. 9, 2014.

(51) **Int. Cl.**

H05B 39/09	(2006.01)
H05B 33/08	(2006.01)
F21S 10/00	(2006.01)
F21S 10/02	(2006.01)

(52) **U.S. Cl.**
CPC ***H05B 33/0818*** (2013.01); ***H05B 33/0845*** (2013.01); ***H05B 33/0857*** (2013.01)

(58) **Field of Classification Search**
None
See application file for complete search history.

(56) **References Cited**

U.S. PATENT DOCUMENTS

5,749,646 A * 5/1998 Brittell F21S 10/02 362/231
5,871,271 A * 2/1999 Chien A42B 3/044 362/103

* cited by examiner

Primary Examiner — Dedei K Hammond
(74) *Attorney, Agent, or Firm* — Altera Law Group, LLC

(57) **ABSTRACT**

A system and method of creating a steady ON and a special effects light effect from a bulb without providing any special wiring thereto. In one embodiment, the bulb contains an illumination element and a controller which produces the special effect in the element. By interrupting the flow of current to the controller periodically, the controller is initialized to its initial steady ON condition. A plurality of steady ON pulses at a high frequency will appear as a steady ON light, instead of pules, thereby producing a steady ON appearance without special wiring. When the current is allowed to flow continuously, the controller produces the special effect. A second embodiment uses parallel polarized light element which produce different effect when power is applied in opposite polarities, thereby providing two effects with no special wiring.

20 Claims, 7 Drawing Sheets

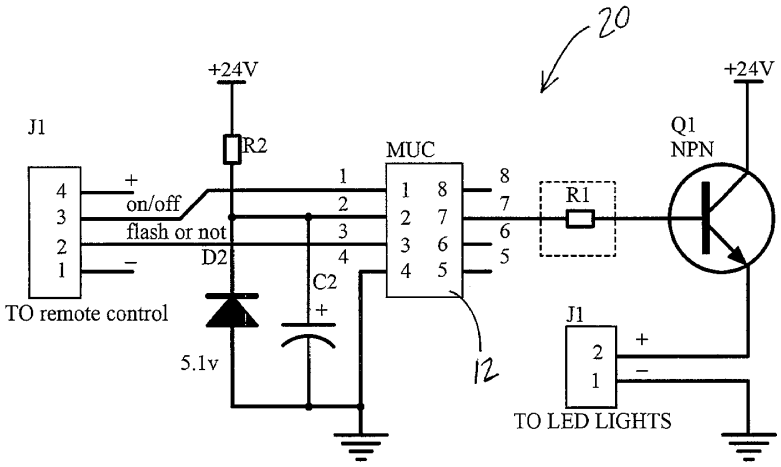

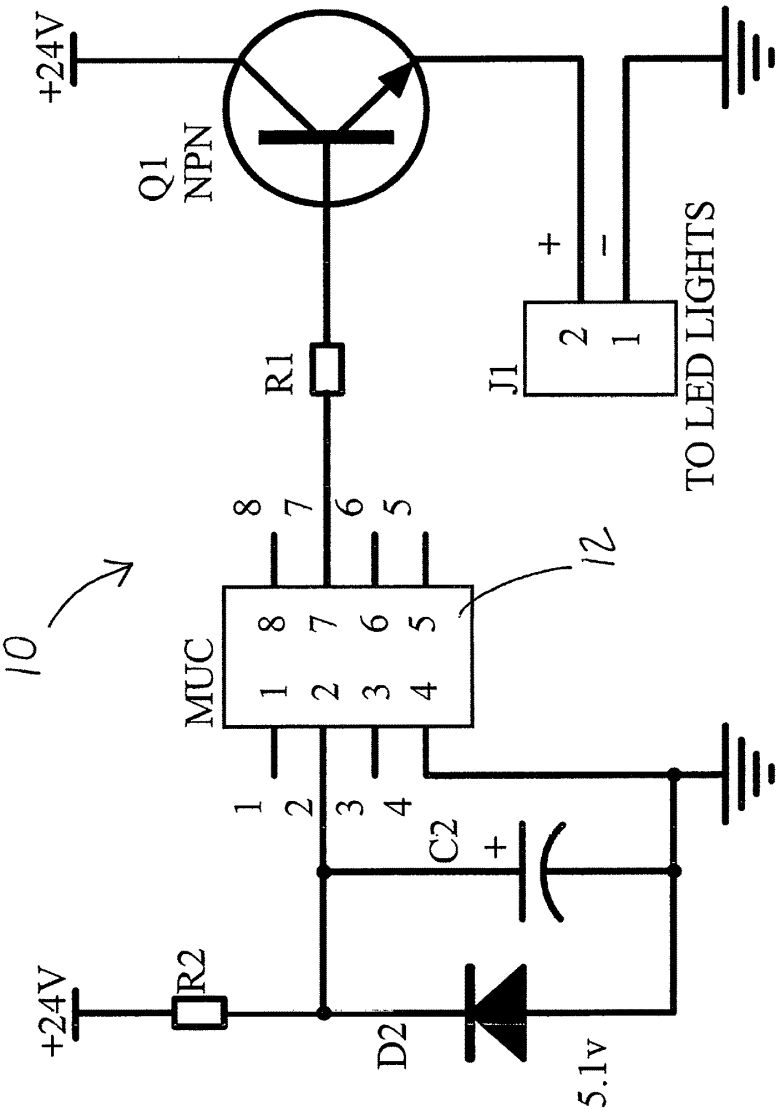
+24V
Q1
NPN
R1
J1
2
1
+
−
TO LED LIGHTS
8
7
6
5
10
12
MUC
1
2
3
4
C2
+
+24V
R2
D2
5.1v

Fig. 1

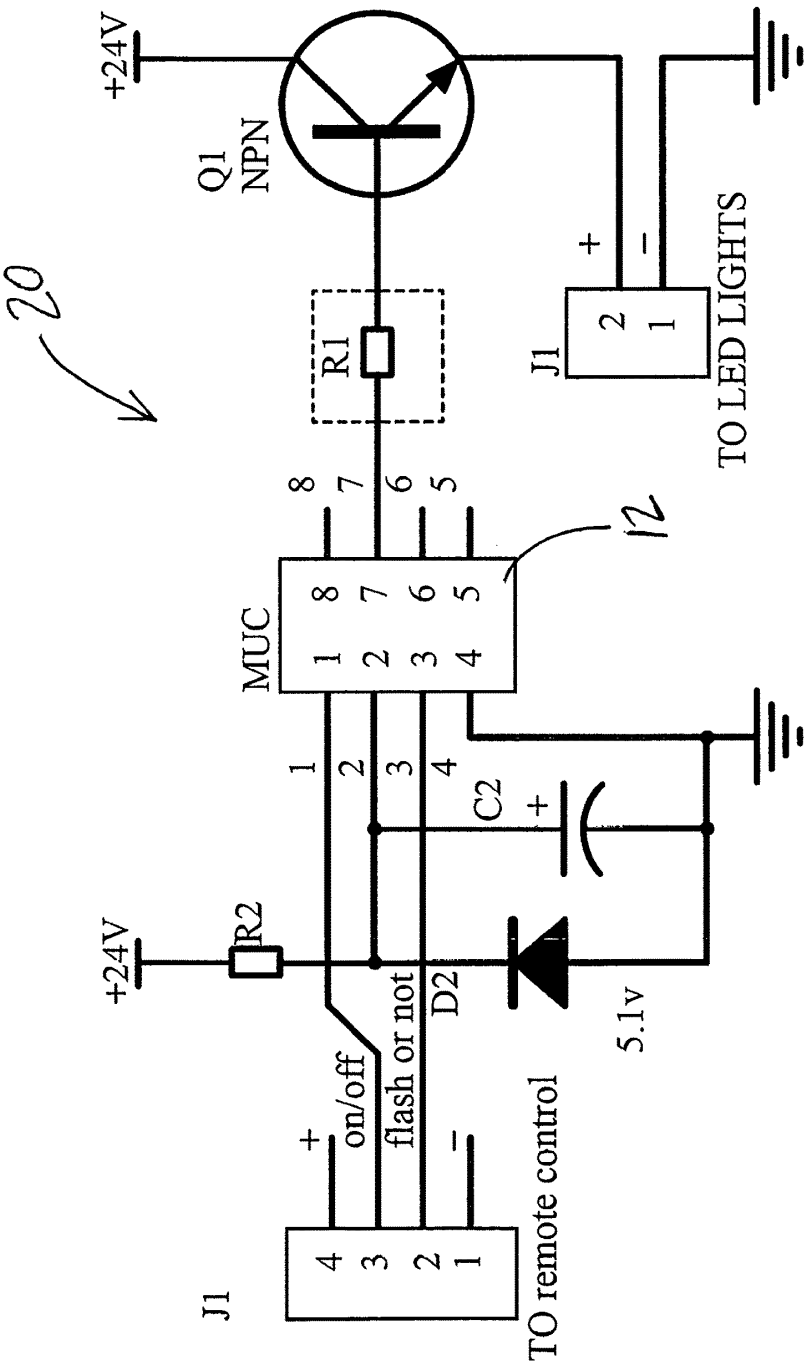
20
+24V
Q1
NPN
R1
8
7
6
5
MUC
1
2
3
4
12
J1
2
1
+
−
TO LED LIGHTS
C2
+24V
R2
D2
5.1v
J1
4
3
2
1
+
on/off
flash or not
−
TO remote control

Fig. 2

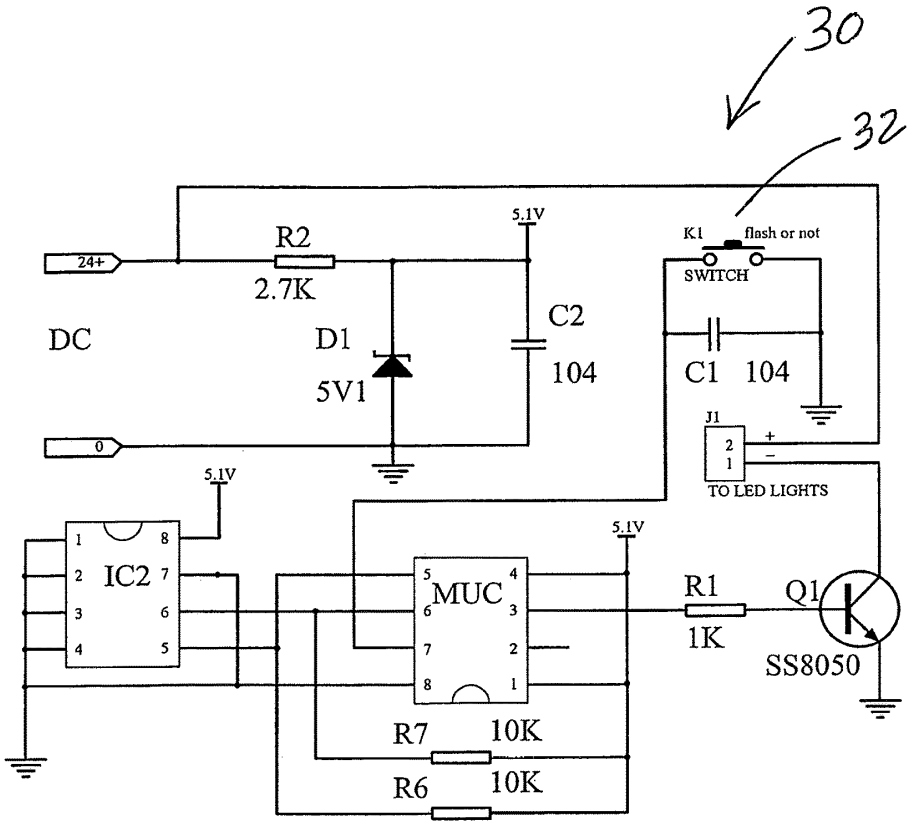
30
32
24+
R2
2.7K
5.1V
K1
flash or not
SWITCH
DC
D1
5V1
C2
104
C1
104
0
J1
2
1
+
−
TO LED LIGHTS
5.1V
IC2
MUC
5.1V
R1
1K
Q1
SS8050
R7
10K
R6
10K

Fig. 3

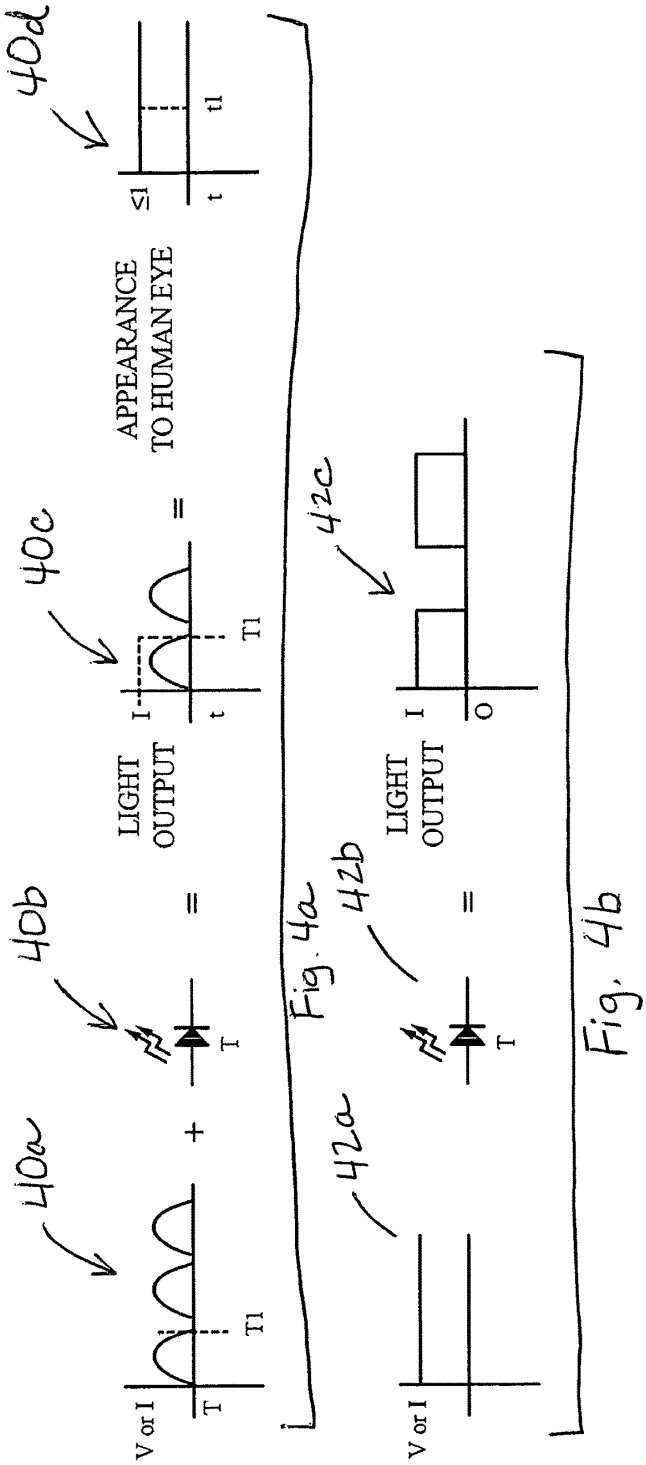
40a
V or I
T
T1
+
40b
T
=
LIGHT OUTPUT
40c
I
t
T1
=
APPEARANCE TO HUMAN EYE
40d
≤I
t
t1
Fig. 4a
42a
V or I
42b
T
=
LIGHT OUTPUT
42c
I
O
Fig. 4b

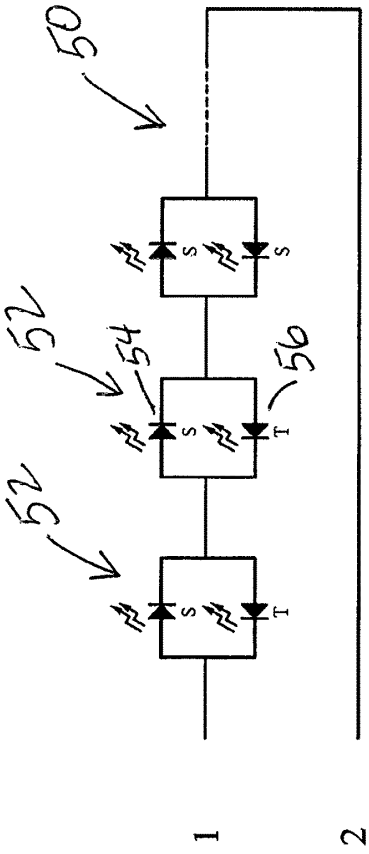

Fig. 5

1	2	CONDITION
+	−	ALL STEADY ON
−	+	SOME OR ALL TWINKLE

Fig. 6

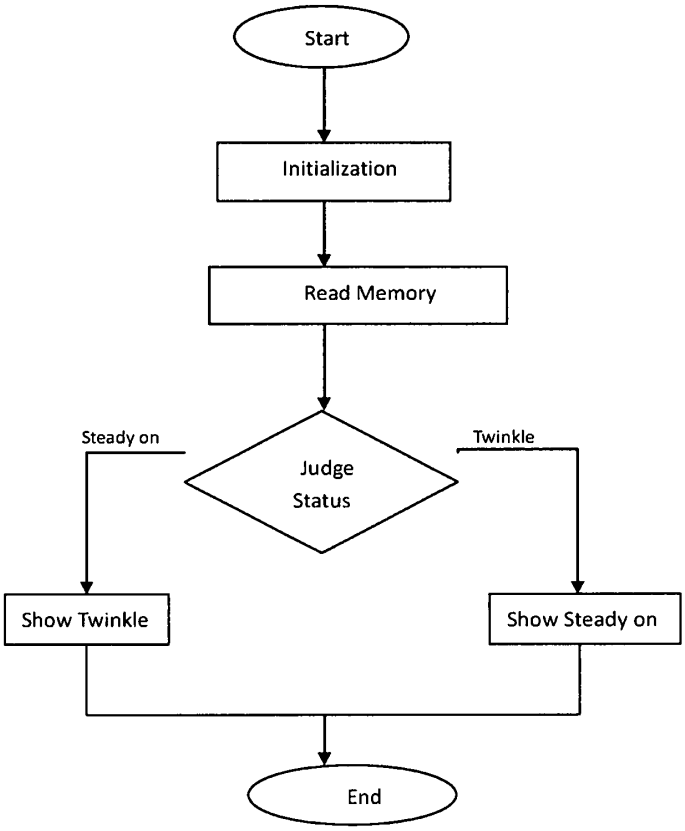
Start
Initialization
Read Memory
Steady on
Judge Status
Twinkle
Show Twinkle
Show Steady on
End

Figure 7

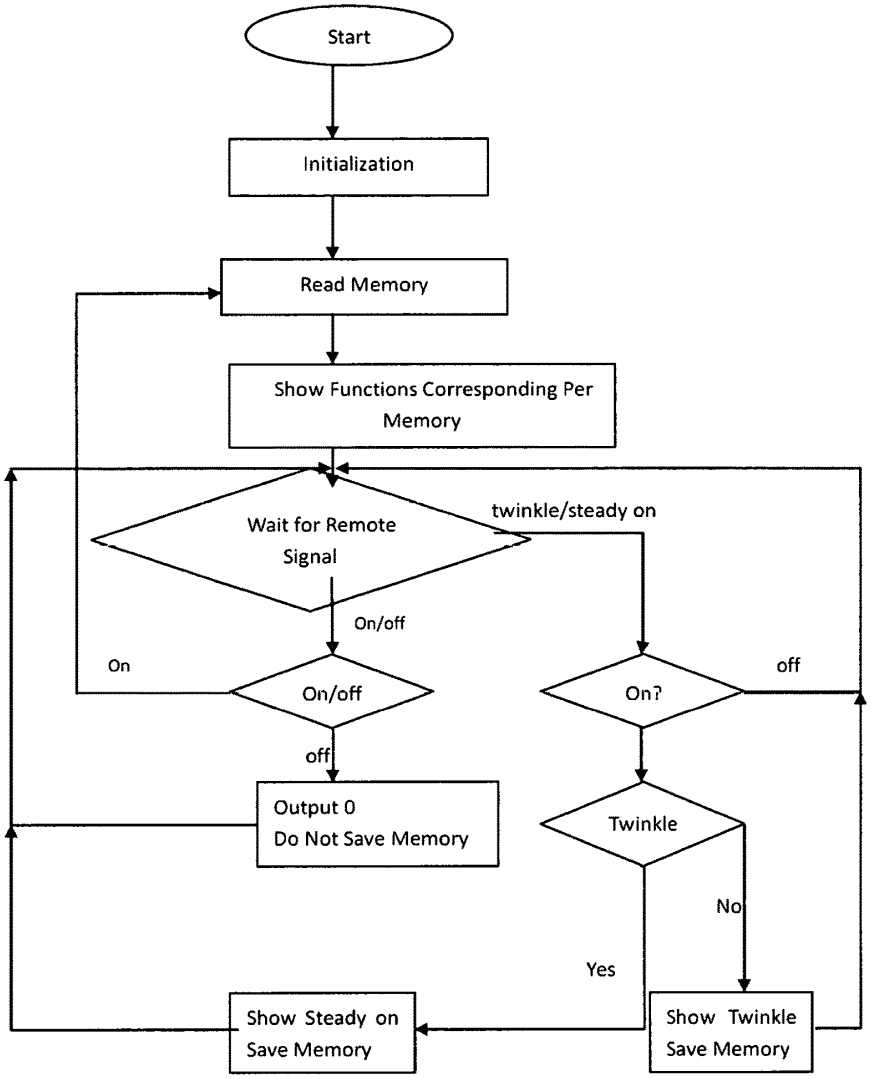
Start
Initialization
Read Memory
Show Functions Corresponding Per Memory
Wait for Remote Signal
twinkle/steady on
On/off
On
On/off
off
On?
off
Output 0
Do Not Save Memory
Twinkle
No
Yes
Show Steady on Save Memory
Show Twinkle Save Memory

Fig. 8

DECORATIVE LIGHT STRING SWITCHABLE BETWEEN DIFFERENT ILLUMINATION STATES

INCORPORATION BY REFERENCE

This application incorporates by reference in its entirety provisional application Ser. No. 62/061,836 filed 9 Oct. 2014 entitled Convertible Twinkle Light String Switchable To Steady-On Light String for which it also claims priority.

TECHNICAL FIELD

This disclosure relates to decorative lighting strings of lights having a plurality of bulbs spaced along the string.

BACKGROUND

Decorative lighting, such as holiday lighting includes strings of bulbs spaced out along a pair of wires. The bulbs may be incandescent or now more frequently, LEDs. Light strings can be made much more interesting if they can switch illumination state, color, or other special effects. Twinkling is particularly attractive. Twinkling or flashing as the bulbs change from on to off, at different frequencies or different illumination slopes to give the visual impression that the bulbs are shimmering.

To create these special effects, the bulbs can be directly wired to a power source which controls the current flow in such a way as to pulse/twinkle or create other special lighting effects. To control bulbs in such a manner, would either require multiple conductors to each bulb for individual control or multiple conductors creating different circuits to alternatingly spaced bulbs to create simulate random sequencing of changing color, shimmering, or flashing.

Alternatively, the bulbs may contain their own microcontroller built into each or some of the bulbs or lamp holders, such that normal wiring can be used, however, the disadvantage to this construction is that the user is not able to select the mode of those lights, such as all being steady illuminating in one mode, and another mode where they perform their intended function of the microcontroller electrically connected to those individual bulbs.

In an alternative construction, bulbs may include addressable circuits which allow digital control signals to be sent to all bulbs in a wired string, and the signal intended by a particular bulb can be decoded by IP or other addressing, to control only that bulb. Such an addressable solution is expensive because it requires advanced logic be provided at the power source and each bulb must have a decoder.

Therefore, to obtain the benefits of control of function and illumination method of bulbs without additional wiring, sophisticated, or expensive circuits has not been possible.

It has been shown in the market that people would like the option to have single light set that can offer both a steady on lighting effect and other lighting effects, such as a twinkling effect that can be user selected, so that depending on the mood of the user, or event, the lights can either be set to be steady on or twinkle, color changing, or other switchable effects.

Twinkling can be described as a change in brightness (ramping up/down, dimming) or a switching on/off and changing the frequency of the switching or both including the separate control of red, green and blue LEDs in a single lamp structure to create color changing effects that include fading or flashing.

SUMMARY

The following summary is intended to assist the reader in understanding the full disclosure and the claims. The claims define the scope of the invention, not this summary.

There is disclosed a system for switchably changing the function of a special function bulb controller to switch an illumination element between having visual appearance of steady-on and a visual appearance of a predetermined special visual function, having

a. an electrically powered illumination element;

b. a first switching circuit in communication said illumination element for controlling the flow of current to the element, said first circuit containing a controller for controlling the power to said illumination element to produce a predetermined special illumination visual lighting effect in the illumination element, said first circuit initiating said lighting effect when powered up starting from an initial steady on illuminated state in the element and then proceeding to other special lighting effects occurring after the steady on power up and periodically repeating said special lighting effect for a predetermined period of time; and

c. a second switching circuit in communication with said first circuit, configured to periodically interrupt the flow of current to said first circuit, at an interruption frequency sufficient to cause the second circuit to reset to its steady on state without proceeding to said other special lighting effects, and thereby producing a plurality of steady on illumination pulses in the illumination element.

Also disclosed is wherein said interruption frequency is at least sufficient to create the visual appearance in the illumination element of a steady on light.

Also disclosed is wherein said interruption frequency is at least sufficient to provide a plurality of light pulses from the illumination element which appear of substantially uniform intensity.

Also disclosed is wherein said interruption frequency is at least beyond the frequency of a human to observe flicker in the illumination element.

Also disclosed is wherein said interruption frequency includes periodically energizing and reenergizing the second circuit to at least sufficiently create the visual appearance in the illumination element of a steady on illumination.

Also disclosed is wherein said special function is a twinkle light effect.

Also disclosed is wherein said special function is a blinking light effect.

Also disclosed is wherein said special function is a color changing effect.

Also disclosed is wherein said special function is a color hue changing effect.

Also disclosed is wherein steady on includes a momentary illumination at a substantially uniform light output.

Also disclosed is a system for switchably converting a special effect lighting system to switch from a steady on light output to a special effect light output having

a. a light string including:

1. a first illumination element which illuminates when energized when powered in a first polarity and not a second opposite polarity;

2. a second illumination element connected in parallel with said first element and configured to output light with a special lighting effect when power is applied in the second polarity only;

b. a switching circuit connected to said elements, said circuit applying power to said string in said first polarity so only said first element will illuminate, and, then apply power in said second polarity, thereby illuminating only said second illumination element with said special effect.

Also disclosed is wherein said first element illuminates when power is applied in either polarity.

Also disclosed is wherein said first and second elements illuminate alternately when Alternating Current (AC) power is applied thereto.

Also disclosed is wherein the circuit is a reversing switch.

Also disclosed is wherein said special effect is light twinkling.

Also disclosed is wherein said special effect is color changing.

Also disclosed is wherein said special effect is color hue changing.

Also disclosed is a method of switchably changing the function of a special function bulb controller to switch an illumination element between having visual appearance of steady-on and a visual appearance of a predetermined special visual function, having any or all of the steps of in any order:

a. electrically powering illumination element;

b. in communication said illumination element, controlling the flow of current to the element to produce a predetermined special illumination visual lighting effect in the illumination element, controlling said element so that when it is powered up starting with an initial steady on illuminated state in the element and then proceed to said special lighting effects occurring after the steady on power up and periodically repeating said special lighting effect for a predetermined period of time, and

c. periodically interrupt the flow of current to said first circuit, at an interruption frequency sufficient to cause a steady on state without proceeding to said special lighting effects, and thereby producing a plurality of steady on illumination pulses in the illumination element.

BRIEF DESCRIPTION OF THE FIGURES

FIG. **1** illustrates an exemplary circuit **10** for which can be connected to light string (not shown) at connector J**1**.

FIG. **2** shows an alternative circuit **20** which is differs from FIG. **1** in that it has an input for a wired or wireless remote control at connector.

FIG. **3** shows a further variant **30** of the circuit in FIG. **2** with a switch **32** to control whether the reset pulses are sent or not.

FIGS. **4***a* and **4***b* illustrate a group of sub figures which illustrate the visual effect.

FIG. **5** illustrates the light string **50**.

FIG. **6** illustrates the power conditions and results.

FIG. **7** is a flow chart of the MCU/MUC controller in FIG. **1** and FIG. **2**.

FIG. **8** is a flow chart of the MCU/MUC controller in FIG. **2** and FIG. **3**.

DETAILED DESCRIPTION

Embodiment 1

In this embodiment, a light string can be controlled to operate specially configured bulbs to switch from one state to another without the need to reverse polarity of the power supply, adding additional control wires, or use of addressable bulbs and a controller. A "bulb" in this instance is an illumination element, such as an LED, incandescent lamp or equivalent which produces light in response to electrical current. It may also include a circuit or chip which controls the function of the illumination element. The two may be combined into a single unit or physically separated. The chip may be integral to the illumination element, in a socket for the element or entirely separated though electrically connected.

The "state" switching can be from on to off, or special effects versions thereof, such as twinkling, pulsing, flashing or other brightness varying effects, color changing, hue changing or other optical effects as determined by the type of control circuits and bulb types provided.

It is possible to include mixture of state controllable/switching bulbs with standard non switching bulbs since the visual effect can be achieved with less than all bulbs being controlled.

More generally, there is disclosed a system for switchably changing the function of a special function bulb controller to switch an illumination element between having visual appearance of steady-on and a visual appearance of a predetermined special visual function, having an electrically powered illumination element and a first switching circuit in communication said illumination element for controlling the flow of current to the element. The first circuit containing a controller for controlling the power to said illumination element to produce a predetermined special illumination visual lighting effect in the illumination element. The first circuit preferably is configured to power up starting from an initial steady on illuminated state, even for a brief period of time at a relatively uniform level of illumination. Then the rest of the special lighting effects are generated by the controller after the steady on power up the special effects are periodically repeated.

There is preferably a second switching circuit in communication with said first circuit, configured to periodically interrupt the flow of current to said first circuit, at an interruption frequency (i.e. on/off switching rate) sufficient to cause the second circuit to reset to its steady on state without or generally before the controller proceeds to the other special lighting effects. By using a switching (on/off) frequency at least higher than what the human eye can perceive as a pulse, the switching will produce a plurality of steady on illumination pulses in the illumination element, but the user will see a substantially steady light. When the second circuit provides a steady current, the illumination elements will produce their special effects, such as twinkling, according the predetermined configuration of the controller.

Thus, no special wires are required to provide these two controller states other than two power conductors to the bulbs.

The interruption frequency is at least sufficient to provide a plurality of light pulses from the illumination element which appear of substantially uniform intensity. The steady on period can also be a period where the intensity is gradually diminishing, but in a train of pulses, it will be seen by a human viewer as steady on.

The preferred interruption frequency is at least beyond the frequency of a human to observe flicker in the illumination element.

In this embodiment, the state switchable bulbs include a circuit which controls the current to the illumination element (usually an LED) to cause the desired effect. Such a circuit

includes a timing device which repeats the special effect on a cyclical basis, the effect being triggered by the timer. If the current is continuously applied to that bulb, the circuit will continuously produce the special effect (such as twinkling and/or color changing) by cycling through preprogrammed steps of changing the current supplied to the illumination element. By interfering with the cycle, it is possible to have such a circuit act as if it was not producing the special effect, but rather, attempting to initialize the effect, by repeatedly being restarted. This is accomplished by sending a reset signal to the circuit, making it think that it must restarted from its beginning state (such as on or a specific starting color/hue) and before it can proceed to the special effect state (such as dimming, color/hue change), sending another reset signal/pulse to the circuit. This has the effect of restarting the circuit from its initial state again. By repeatedly sending a reset pulse, the effect is either a continuous unchanged light output, or a series of short on pulses of light, with short off periods therebetween. The visual effect by a human viewer is that the light is on continuously due to the slow reaction time of the human eye and integration of the light over time. It is also possible to reset the special effects timer in the circuit, by disconnecting and reconnecting power to the entire circuit. This will have the effect of a reset since the circuit will reinitialize in a start state every time it receives power from a zero power state and initiate a timing sequence to restart from on state. The frequency of reset signals required will depend on the circuit construction, but for some devices a 50-60 Hz reset pulse rate has proven effective in creating the visual effect on an always on state while for other devices the required pulse rate may be several kilohertz, such as 50-60 kHz. In the preferred embodiment, using a bulb having a chip made by Zhejiang Newday Photoelectric Technology Co., Ltd.

Model YL11, Linhai, Taizhou City, China, the preferred pulse rate is 60 hz or at least 60 hz, but not more than 1 kHz. With other chips, the preferred range is at least as high as needed to prevent flicker being perceived by a human viewer, typically 60+ Hz and less than the maximum switching rate of the chip, in this case approximately 1 kHz. Above the switching rate, the reset to the initialization (start) state may not be reliable.

Voltage or current changes or both are sent in pulses to the bulbs, at a rate that is quick enough to reset the circuit/micro IC inside the twinkle LED that causes it to twinkle. By doing this it tricks the twinkle LED and IC into not turning on and off as the IC keeps resetting so that the LED appears that it is steady illuminating. The pulses happen so quickly that the human eye is not able to detect the bulb is flashing, similar to operation of an LED light set on 60 Hz without rectification where the human eye integrates the light and thinks it is steady on. In this disclosure, it could be as slow as 50-60 Hz, but will be fast enough to reset the micro IC in the twinkle LED to keep it from turning off long enough that the human eye will detect it and cause it to appear as in a steady-on state. During this pulsed voltage and or current sequence, if not fast enough it may appear that the lights are slightly dimmer than when steady on, but if fast enough will appear at the same brightness as when operating on normal power. Both states can be preferential depending on the lighting effect desired by the lighting designer.

To cause the set to twinkle (or other special effect), one would either have to slow down the pulses so that the IC only resets during the normal off period of the twinkle LED or provide a filtered or unfiltered DC or rectified AC power to the LEDs. This can be done with a range of voltages and power sources such as low voltage transformers or direct line voltage and frequency with or without frequency altering circuitry or periodic alternating the current or voltage.

This pulsing voltage or current can be performed a variety of ways including pulse with modulating circuit (PWM) or other methods to create a pulsed output quick enough to reset the circuit/IC in the twinkling or other special effect LED.

Bulbs can be wired in series or parallel, or in series parallel combinations and operated at line voltage or low voltage.

This embodiment uses the same amount of wire and LEDs as a regular set, only adding a low cost controller to the set, saving on the extra wires, larger bundles, heavier sets, higher cost, reduces the resources needed to manufacture such a set and makes it easier to decorate with than existing products, or the high cost of addressable circuitry on each bulb, a separate data wire, and a processor to send signals to control each bulb. So resetting of the chip trigger occurs when the chip associated with the illumination element is powered up. When the chip receives current, it will always start from a high brightness/color/hue etc. condition and then switch to lesser light output, in accordance with the predetermined special effect function, and then the brightness/hue/color rise/change again. By repeatedly applying power to the chip, the chip resets to its initialized state which is high illumination (or other special effects) so that the chip illuminates the element in its start or high illumination mode.

An alternative construction uses a chip which can decode a modulated signal to cause the reset. This is more complex, but if a modulated reset signal is sent to the chip on top of the power, the chip will reset but in this embodiment the chip could remain powered up at all times, instead of flashing, albeit rapidly. The illumination element will not pulse at all.

FIG. **1** illustrates an exemplary circuit **10** for which can be connected to light string (not shown) at connector J**1**. The light string can be a series or parallel wired bulbs (illumination elements+circuit components). It is only necessary that each bulb receives current to operate the illumination element and circuit.

The MUC/MCU microcontroller unit, IC chip **12** is of a type known in the art for supplying and controlling current to the light string at j**1**. The function of the chip is explained in the flow chart in FIG. **7**. Output pin **7** is PWM output.

FIG. **2** shows an alternative circuit **20** which differs from FIG. **1** in that it has an input for a wired or wireless remote control at connector J**2** which will switch power on/off, and "flash" (i.e. special effects) on/off. The flash switch activates IC **12** to send rapid reset pulses to the bulb strings connected at J**1** so that the special effects timers in the bulbs is rapidly reset thereby appearing to generate a contact on appearance by preventing the "twinkle" effect from occurring in the bulbs.

FIG. **3** shows a further variant **30** of the circuit in FIG. **2** with a switch **32** to control whether the reset pulses are sent or not. FIG. **8** is a flow chart of the MCU/MUC controller in FIG. **3**. Output pin **3** is the PWM output.

FIGS. **4***a* and **4***b* illustrate a group of sub figures which illustrate the visual effect. Illustration **40***a* shows a varying voltage or current input to the bulb light string. A pure DC input is also possible. Illustration **40***b* is a schematic illustration on a bulb which in this case is an LED with a twinkle chip incorporated therein. This circuit/chip has been discussed previously as one commercially available and which provides a special effect on the illumination element when power is continuously applied to the chip. Twinkle, pulse, color, hue and other effects are available.

Illustration **40***c* is the actual light output at the illumination element when the special effect chip is reset at a rate fast enough to prevent the chip from executing its normal special effect. The light output mimics the power input, as if the chip was non-existent. The result, shown in illustration **40***d*, is that the human view perceives the light output as steady. This is from a chip which has no special provision for producing a steady light output, but the rapid resetting of the chip function has effectively "tricked" the chip and hence the viewer into seeing solid illumination when it should be providing some other special effect.

FIG. **4***b* show the "normal" result of the special effect chip in the light string when continuous current is applied at **42***a*. The bulb **42***b* produces some special effect, in this case pulsing or twinkling as shown in **42***c*.

Embodiment 2

Embodiment 2 provides a similar result to the first embodiment but employs an entirely different solution. FIG. **5** illustrates the light string **50** and FIG. **6** illustrates the power conditions and results. In FIG. **5** a plurality of bulbs **52** (circuit elements and illumination elements combined) are shown in series, though parallel or a combination of series/parallel is equally possible. Bulbs **52** combine elements **54** "S", solid or always on LED with element **56** "t" a twinkle LED with twinkle (or other special function) circuit. Note that they are in parallel with reverse polarity. That means when power is applied in one direction, the **54** element will illuminate, but in with reverse power, the other element **56** will illuminate but with special function. FIG. **6** illustrates polarity and the result.

Thus, to make this circuit produce special effects, the polarity of the power need only be reversed. Of course, a mixture of T and S bulbs can be provided in the light string **50** to produce assorted outputs.

Alternatively, on inputs **1** and **2**, a low frequency power source could be applied to provide a combination effect of the steady illuminating light source and the special effect light source at the same time. In other words, if AC is applied to inputs **1**-**2**, the result will be the same as reversing polarity. The positive and negative wave forms will provide the reversing of polarity. In such case, the special effect is controlled by the frequency of the waveform.

Each bulb could be an LED and chip in the same housing, or in two separate housings next to each other to give the appearance when lit of one bulb, or combined in a refractive or translucent cover.

The bulb pairs can be wired in parallel or in series to other bulb pairs.

A simple controller or mechanical switching device is needed to be able to reverse the polarity of the bulb pairs so that one the polarity is in one direction, the set illuminates steady on, and when in the other direction, the set has a twinkle or other special effect function to it.

In first direction, all steady on bulbs are properly biased for current flow, while the twinkle bulbs are reversed biased.

In the other direction, all twinkle bulbs are properly biased for current flow. Depending on the application, if not all the bulbs were intended to twinkle, some of the twinkle bulbs could be substituted with steady on bulbs to create the effect desired.

This method uses the same amount of wire a regular set, adding a second set of LEDs and a low cost controller, saving on the extra wires, larger bundles, heavier sets, higher cost, reduces the resources needed to manufacture such a set and makes it easier to decorate with than existing products, or the high cost of addressable circuitry on each bulb, a separate data wire, and a processor to send signals to control each bulb.

For both embodiments the user selector of the operational mode (all steady on or all/partial twinkle/special effect) can be a variety of methods, including, but not limited to a selector switch, remote control, wireless control (WiFi, Bluetooth, ZigBee, etc.), app control, sound actuated, motion actuated, gesture actuated, etc.

The description of the invention and its applications as set forth herein is illustrative and is not intended to limit the scope of the invention. Variations and modifications of the embodiments disclosed herein are possible and practical alternatives to and equivalents of the various elements of the embodiments would be understood to those of ordinary skill in the art upon study of this patent document. These and other variations and modifications of the embodiments disclosed herein may be made without departing from the scope and spirit of the invention.

The invention claimed is:

1. A system for switchably changing the function of a special function bulb controller to switch an illumination element between having visual appearance of steady-on and a visual appearance of a predetermined special visual function, comprising:

a. an electrically powered illumination element;

b. a first switching circuit in communication said illumination element for controlling the flow of current to the element, said first circuit containing a controller for controlling the power to said illumination element to produce a predetermined special illumination visual lighting effect in the illumination element, said first circuit initiating said lighting effect when powered up starting from an initial on illuminated state in the element and proceeding to other special lighting effects occurring after the on power up and periodically repeating said special lighting effect for a predetermined period of time, and

c. a second switching circuit, configured to periodically interrupt the flow of current to said first circuit, at an interruption frequency sufficient to cause the first circuit to reset to its on state without proceeding to said other special lighting effects, and thereby producing a plurality of on illumination pulses in the illumination element, so that a viewer perceives the illumination element as always on.

2. The system of claim **1** wherein said interruption frequency is at least sufficient to create the visual appearance in the illumination element of a steady on light.

3. The system of claim **2** wherein said interruption frequency is at least sufficient to provide a plurality of light pulses from the illumination element which appear of substantially uniform intensity.

4. The system of claim **2** wherein said interruption frequency is at least beyond the frequency of a human to observe flicker in the illumination element.

5. The system of claim **2** wherein said interruption frequency includes periodically energizing and reenergizing the second circuit to is at least sufficient to create the visual appearance in the illumination element of a steady on illumination.

6. The system of claim **2** wherein said special function is a twinkle light effect.

7. The system of claim **2** wherein said special function is a blinking light effect.

8. The system of claim **2** wherein said special function is a color changing effect.

9. The system of claim **2** wherein said special function is a color hue changing effect.

10. The system of claim **2** wherein steady on includes a momentary illumination at a substantially uniform light output.

11. A system for switchably converting a special effect lighting system to switch from a steady on light output to a special effect light output comprising:

a. a light string including:

1. a first illumination element which illuminates when energized when powered in a first polarity and not a second opposite polarity;
2. a second illumination element connected in parallel with said first element and configured to output light with a special lighting effect when powered is applied in the second polarity only;

b. a switching circuit connected to said elements, said circuit applying power to said string in said first polarity so only said first element will illuminate, and alternately apply power in said second polarity, thereby illuminating only said second illumination element with said special effect.

12. The system of claim **11** wherein said first element illuminates when power is applied in either polarity.

13. The system of claim **11** wherein said first and second elements illuminate alternately when Alternating Current (AC) power is applied thereto.

14. The system of claim **11** wherein the circuit is a reversing switch.

15. The system of claim **11** wherein said special effect is light twinkling.

16. The system of claim **11** wherein said special effect is color changing.

17. The system of claim **11** wherein said special effect is color hue changing.

18. A light string capable of switchable displaying special effect lighting and steady-on lighting outputs comprising:

a. a light string including:

1. a plurality of illumination elements which illuminate when energized by applying power in a first polarity and not illuminate when applying power a second opposite polarity;
2. a plurality of second illumination elements connected in parallel with said first elements and configured to output light with a special lighting effect when powered is applied in the second polarity only;
3. a switching circuit connected to said elements, said circuit being capable of applying power to said string in said first polarity so only said first element will illuminate, and, alternately apply power in said second polarity, thereby illuminating only said second illumination element with said special effect.

19. The light string of claim **18** wherein said switching circuit decodes a modulated signal.

20. The light string of claim **18** further including a second switching circuit to create steady-on illumination, said second a switching circuit in communication said illumination elements for controlling the flow of current to the first illumination elements, said second circuit containing a controller for controlling the power to said illumination elements and configured to periodically interrupt the flow of current to said illumination elements, at an interruption frequency sufficient to cause the second circuit to reset to a steady on-state, and thereby producing a plurality of steady-on illumination pulses in the illumination element.

* * * * *

EXHIBIT C

US011096252B2

(12) **United States Patent**
Altamura

(10) **Patent No.: US 11,096,252 B2**
(45) **Date of Patent: Aug. 17, 2021**

(54) **RESISTIVE BYPASS FOR SERIES LIGHTING CIRCUIT**

(71) Applicant: **Seasonal Specialties, LLC**, Eden Prairie, MN (US)

(72) Inventor: **Steven J. Altamura**, Scarsdale, NY (US)

(73) Assignee: **Seasonal Specialties, LLC**, Eden Prairie, MN (US)

(*) Notice: Subject to any disclaimer, the term of this patent is extended or adjusted under 35 U.S.C. 154(b) by 38 days.

(21) Appl. No.: **16/693,552**

(22) Filed: **Nov. 25, 2019**

(65) **Prior Publication Data**

US 2020/0100347 A1 Mar. 26, 2020

Related U.S. Application Data

(60) Continuation of application No. 15/899,264, filed on Feb. 19, 2018, now Pat. No. 10,492,282, which is a continuation of application No. 14/840,705, filed on Aug. 31, 2015, now Pat. No. 9,900,968, which is a continuation of application No. 14/052,124, filed on Oct. 11, 2013, now abandoned, which is a continuation of application No. 12/947,488, filed on Nov. 16, 2010, now abandoned, which is a division of application No. 11/962,964, filed on Dec. 21, 2007, now Pat. No. 7,851,981.

(60) Provisional application No. 60/876,868, filed on Dec. 22, 2006.

(51) **Int. Cl.**

H05B 39/04	(2006.01)
H05B 47/23	(2020.01)
H01J 9/00	(2006.01)
H01K 3/00	(2006.01)

(52) **U.S. Cl.**

CPC ***H05B 39/041*** (2013.01); ***H01J 9/00*** (2013.01); ***H01K 3/00*** (2013.01); ***H05B 47/23*** (2020.01)

(58) **Field of Classification Search**

CPC H05B 39/041; H05B 37/036; H01J 9/00; H01K 3/00; F21S 4/00; F21V 19/0005; F21W 2121/04

See application file for complete search history.

(56) **References Cited**

U.S. PATENT DOCUMENTS

1,024,495	A	4/1912	Booth
1,510,847	A	4/1922	Holder
1,865,689	A	6/1929	Brander
1,868,689	A	7/1932	Brander
2,072,337	A	3/1937	Kamm
2,152,228	A	5/1937	Waters
2,145,911	A	2/1939	Anderson Waldemar et al.
2,760,120	A	8/1956	Fisherman
3,260,888	A	7/1966	Webb
3,345,482	A	10/1967	Shih-Woo Lou
3,461,921	A	8/1969	Ackerman
3,868,230	A	2/1975	Krukonis
3,912,966	A	10/1975	Harnden, Jr.

(Continued)

Primary Examiner — Anne M Hines

(74) *Attorney, Agent, or Firm* — Hamre, Schumann, Mueller & Larson, P.C.

(57) **ABSTRACT**

A resistor bypass circuit for a series lighting circuit includes a plurality of serially connected light sources and a bypass resistor being connected in parallel with at least one of the respective light sources, each respective light source being low wattage and being capable operating on a one hundred percent duty cycle as desired.

14 Claims, 16 Drawing Sheets

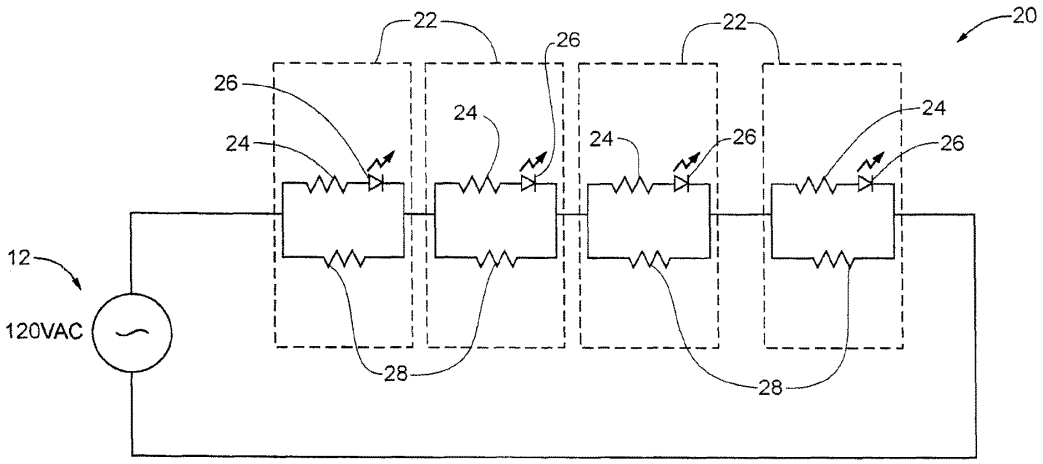

(56) **References Cited**

U.S. PATENT DOCUMENTS

3,942,063	A	3/1976	Winter et al.	
4,463,278	A	7/1984	Kosmatka et al.	
4,464,600	A	8/1984	Kosmatka et al.	
4,629,943	A	12/1986	Ponce, Jr.	
4,727,449	A	2/1988	Fleck	
4,985,001	A	1/1991	Nagai	
5,453,664	A	9/1995	Harris	
5,777,868	A	7/1998	Gibboney, Jr.	
5,886,423	A *	3/1999	Gershen	H05B 47/23 307/36
6,084,357	A	7/2000	Janning	
6,283,797	B1	9/2001	Wu	
6,323,597	B1	11/2001	Janning	
6,344,716	B1	2/2002	Gibboney, Jr.	
6,555,948	B1	4/2003	Noll	
6,580,182	B2	6/2003	Janning	
6,597,125	B2	7/2003	Janning	
6,690,103	B1	2/2004	Uke	
6,765,313	B2	7/2004	Janning	
6,929,383	B1	8/2005	Janning	
7,042,116	B2	5/2006	Janning	
7,166,968	B2	1/2007	Janning	
7,178,961	B2	2/2007	Janning	
7,261,458	B2	8/2007	Janning	
7,342,327	B2	3/2008	Janning	
7,666,036	B1	2/2010	Zou	
7,851,981	B2	12/2010	Altamura	
7,963,670	B2	6/2011	Yu	
9,433,057	B1	8/2016	Janning	
9,510,423	B1	11/2016	Janning	
9,900,968	B2	2/2018	Altamura	
2003/0117021	A1	6/2003	Janning	
2005/0174065	A1	8/2005	Janning	
2005/0205971	A1	9/2005	Janning	
2018/0199419	A1	7/2018	Altamura	

* cited by examiner

Fig. 1

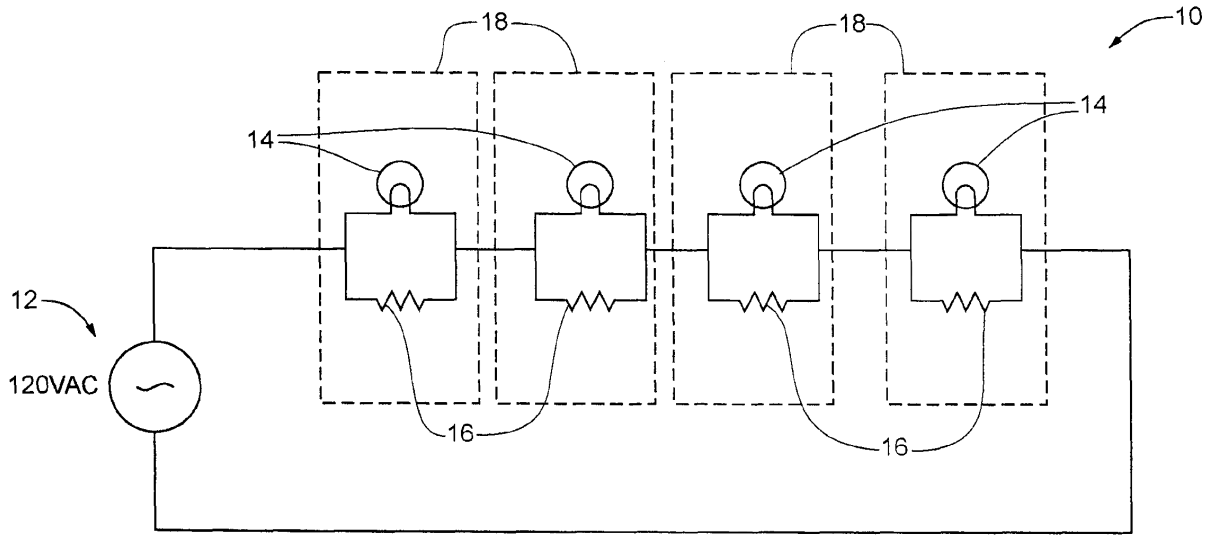

Fig. 2

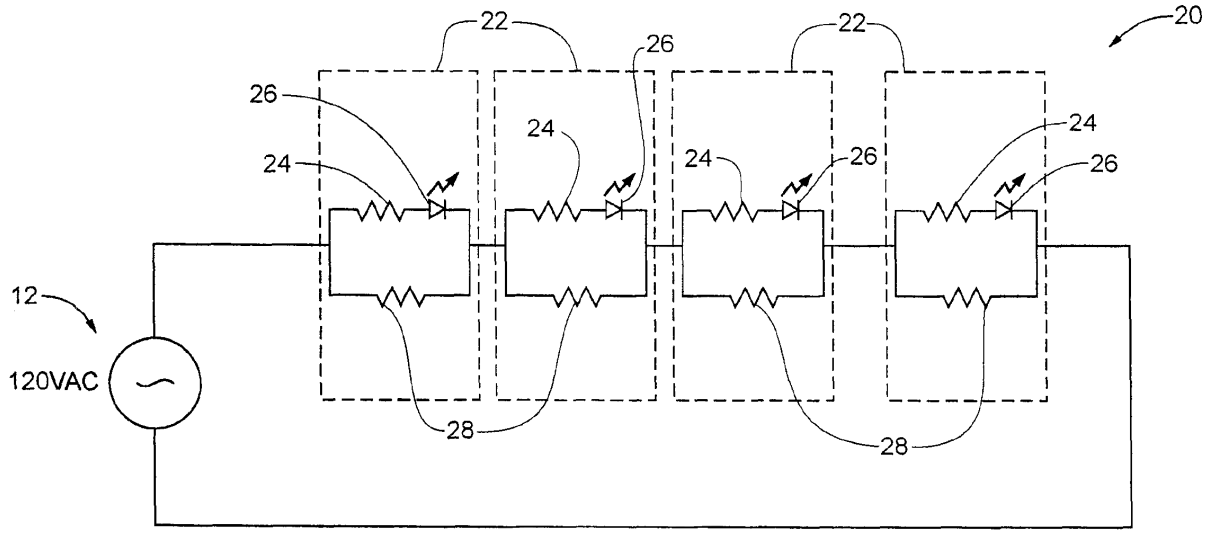

Fig. 2a

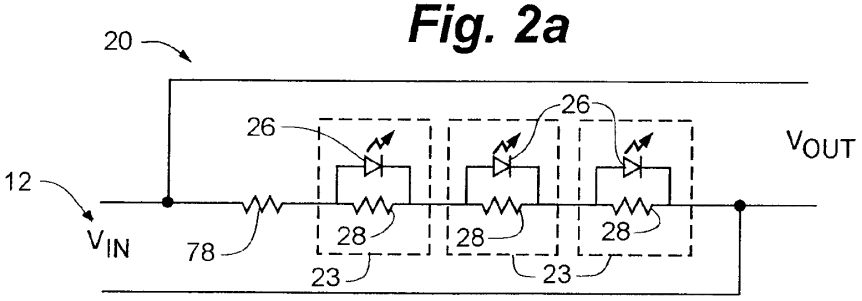
20
26
26
12
V_{OUT}
V_{IN}
78
28
28
28
23
23

Fig. 2b

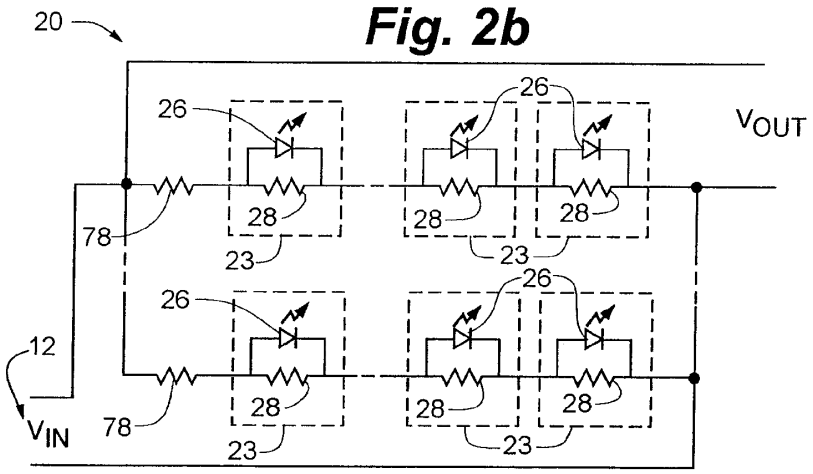
20
26
26
V_{OUT}
78
28
28
28
23
23
26
26
12
V_{IN}
78
28
28
28
23
23

Fig. 2c

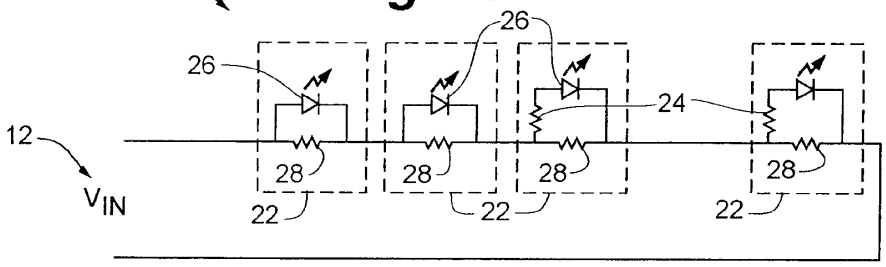
20
26
26
24
12
28
28
28
28
V_{IN}
22
22
22

Fig. 2d

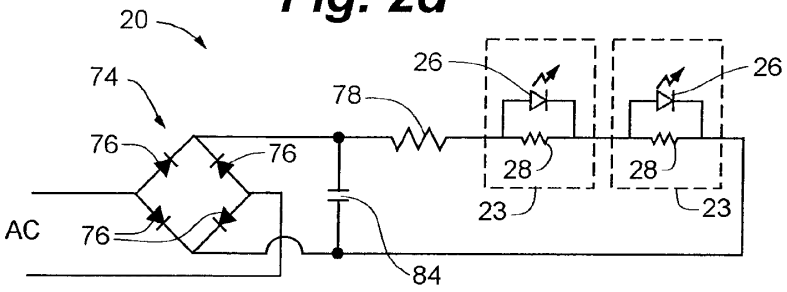
20
74
26
26
78
76
76
28
28
23
23
AC
76
84

Fig. 3

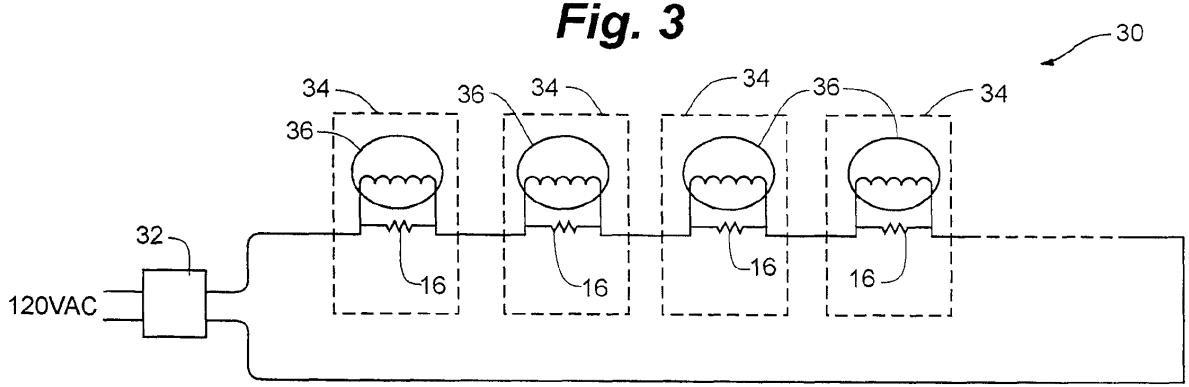

Fig. 4a

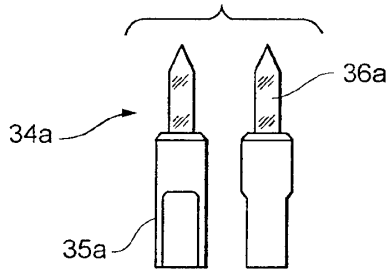

Fig. 4b

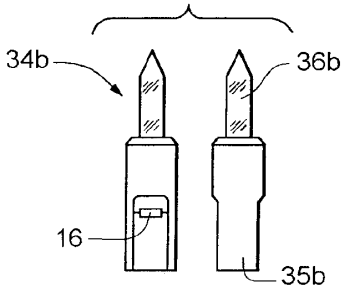

Fig. 4c

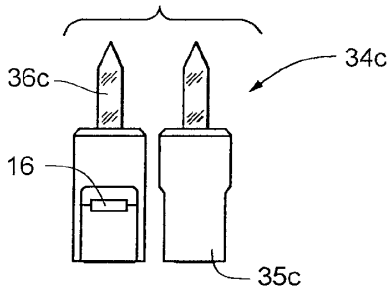

Fig. 4d

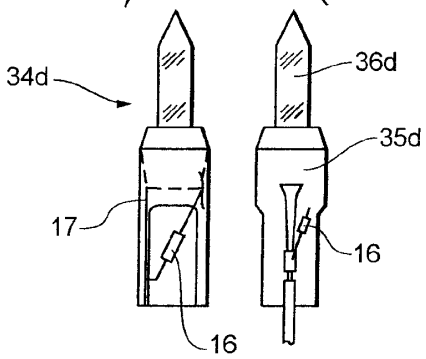

Fig. 5

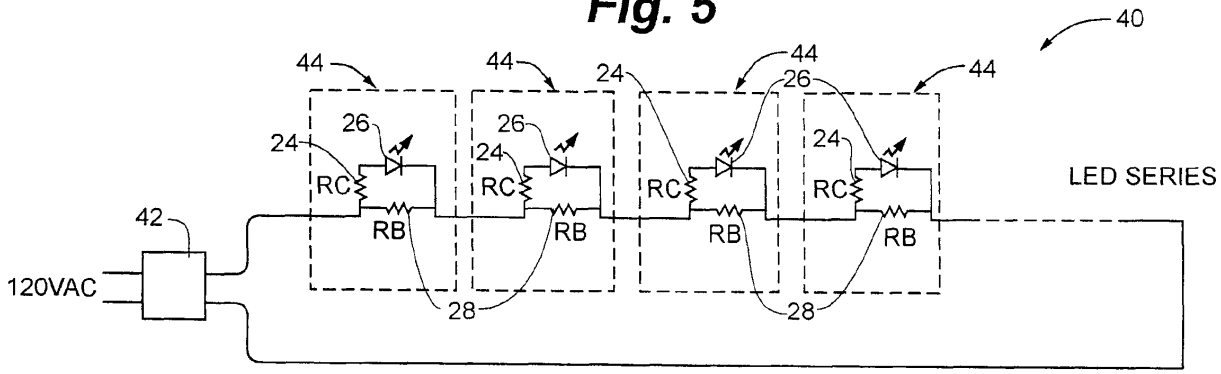
40
44
44
44
44
24
26
26
26
24
24
24
RC
RC
RC
RC
RB
RB
RB
RB
42
120VAC
28
28
LED SERIES

Fig. 6

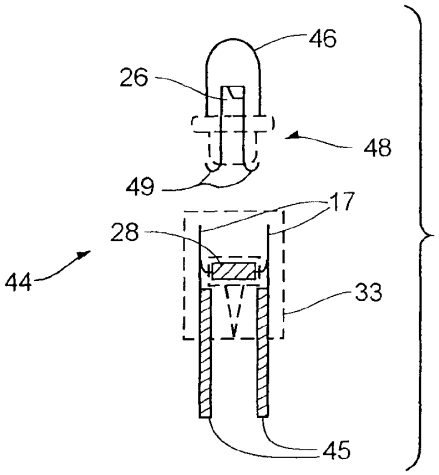

Fig. 7

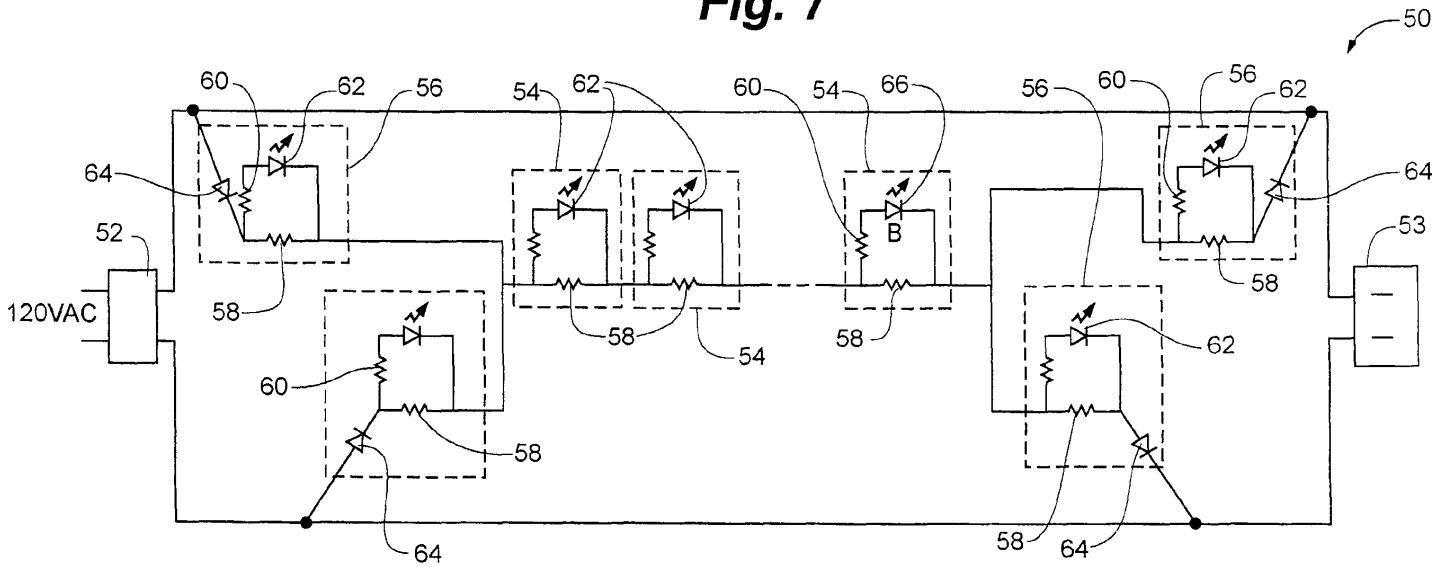

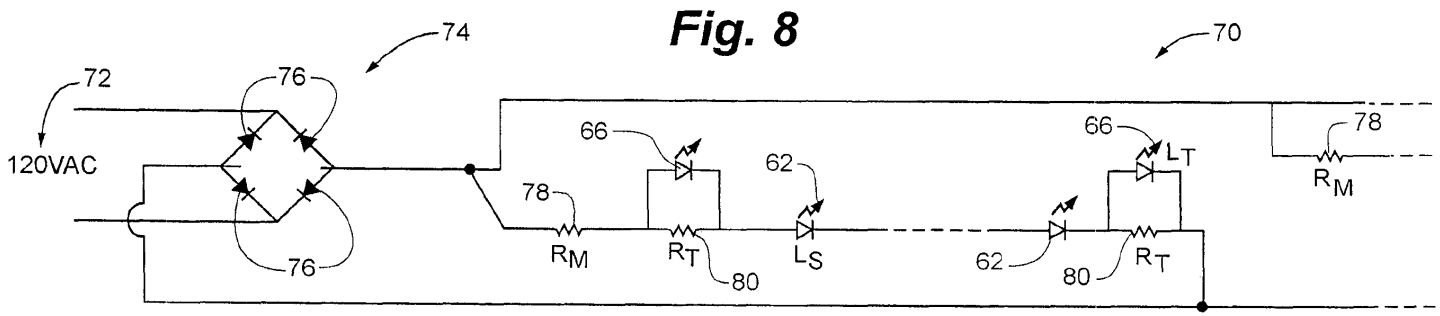

Fig. 8

Fig. 9

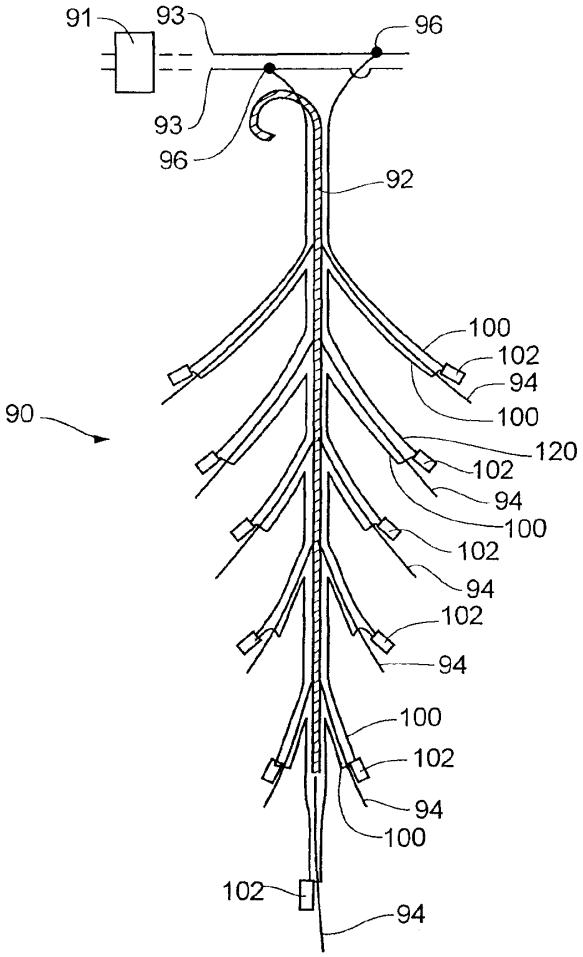
91
93
96
93
96
92
100
102
94
100
90
120
102
94
100
102
94
102
94
100
102
94
100
102
94

Fig. 10

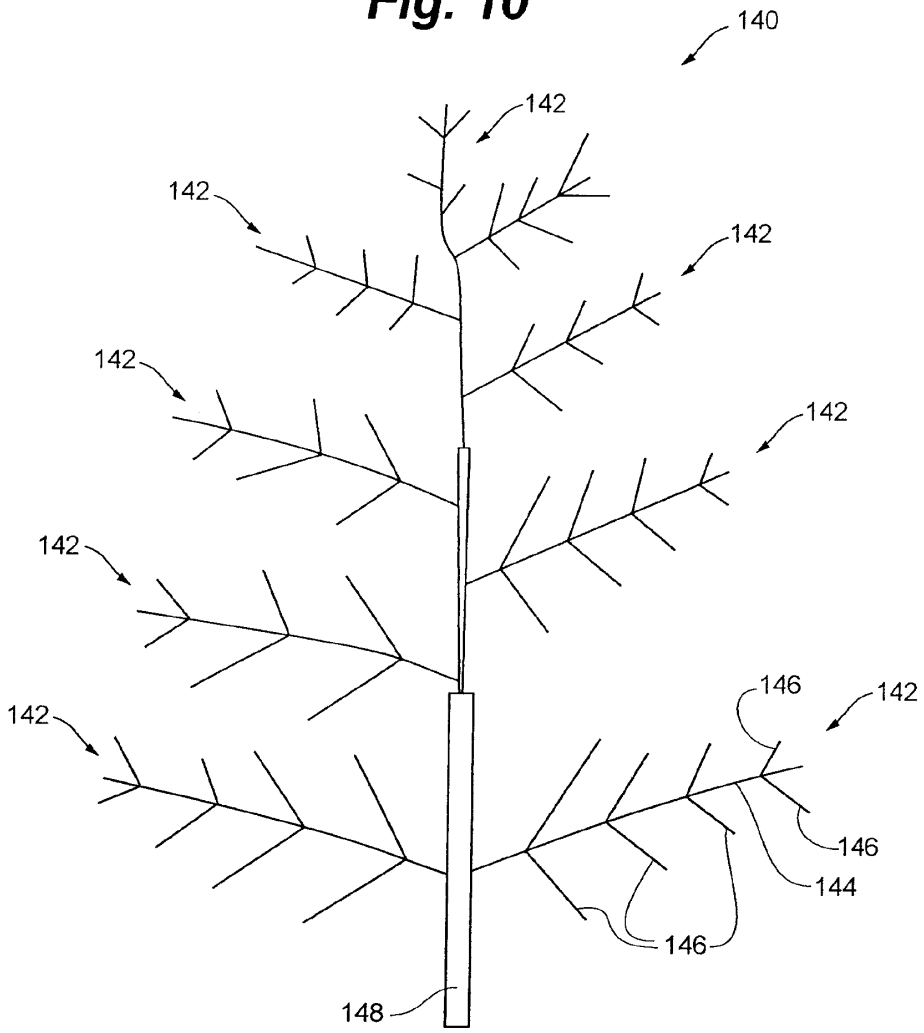

Fig. 11

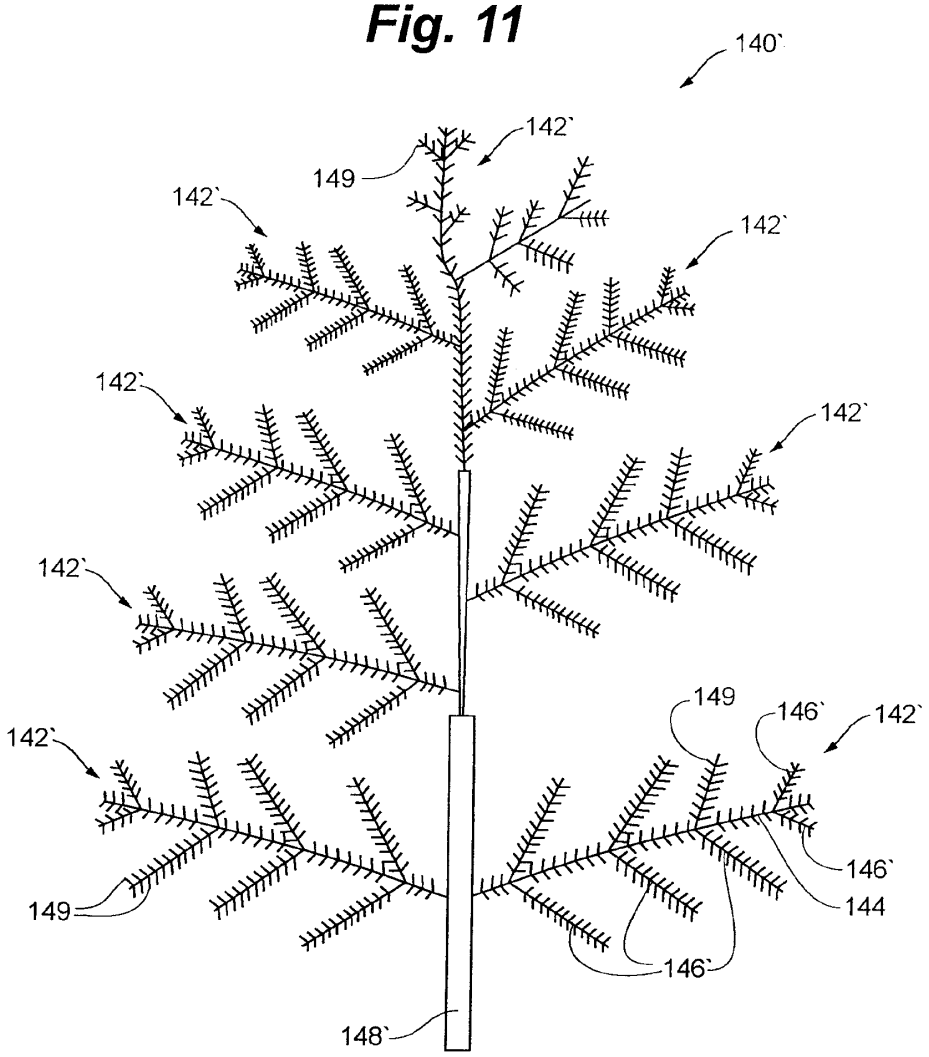
140`
142`
149
142`
142`
142`
142`
142`
142`
142`
149
146`
142`
146`
144
149
146`
148`

Fig. 12

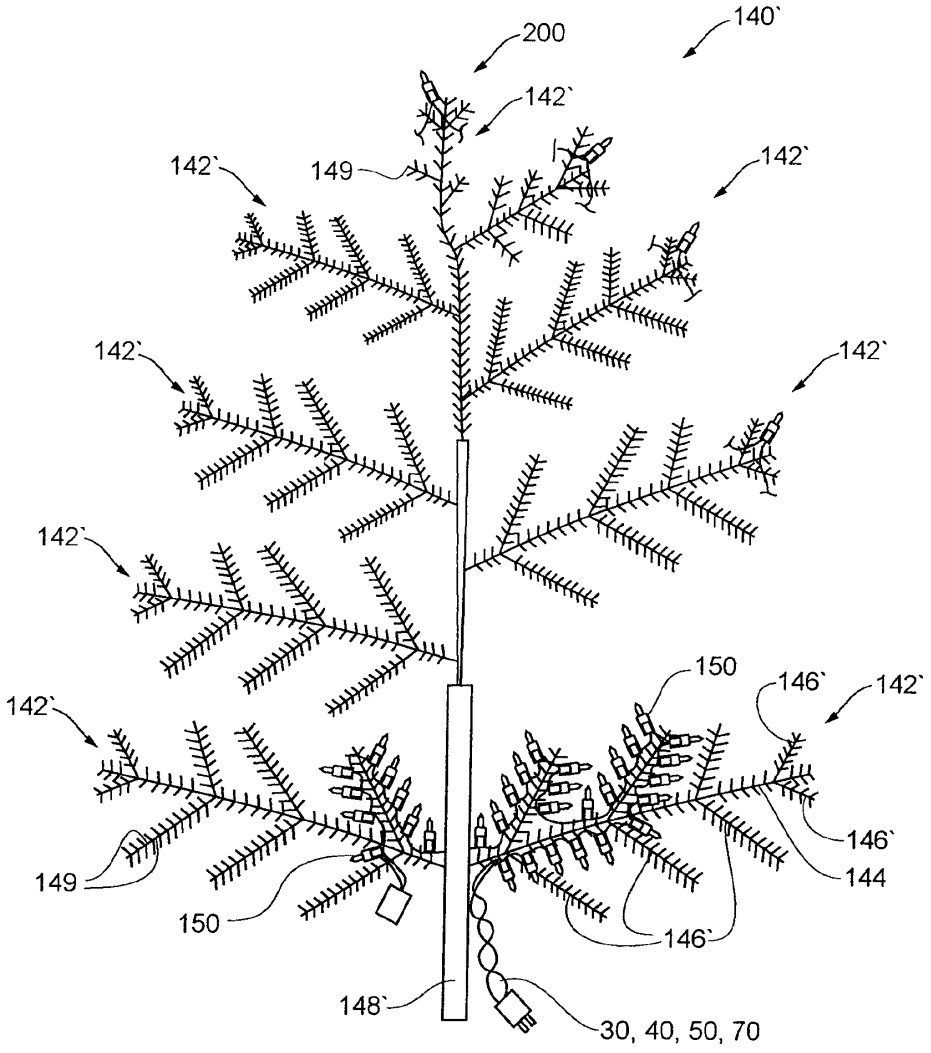
200
140`
142`
142`
149
142`
142`
142`
142`
142`
150
146`
142`
146`
144
149
150
146`
148`
30, 40, 50, 70

Fig. 13

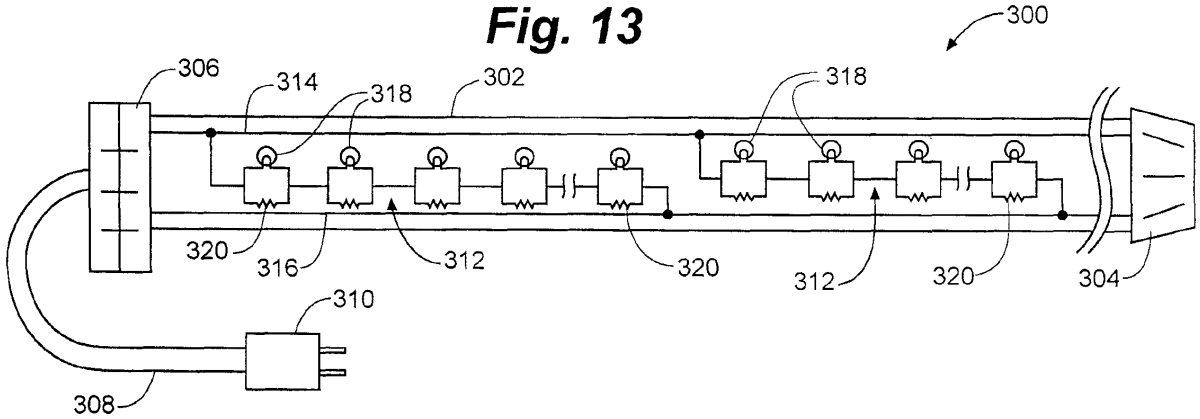
300
306
314
318
302
318
320
316
312
320
312
320
304
310
308

Fig. 14

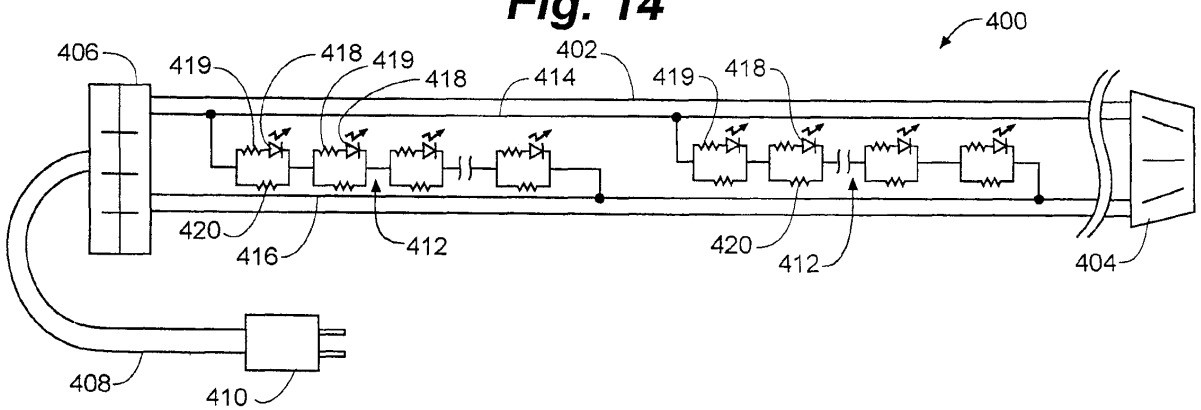
400
406
419
418
419
418
402
414
419
418
420
416
412
420
412
404
408
410

Fig. 15
PRIOR ART

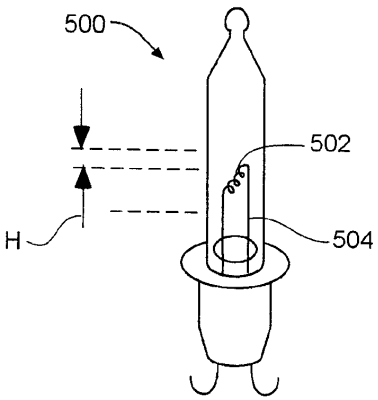

Fig. 16

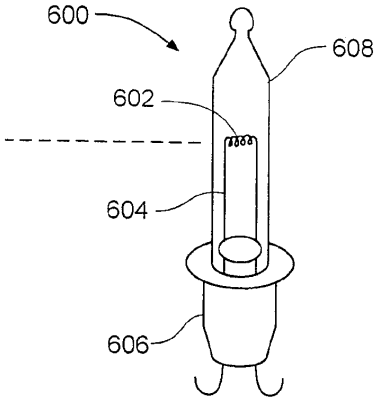

Fig. 17

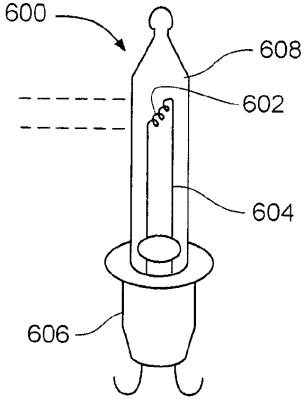

RESISTIVE BYPASS FOR SERIES LIGHTING CIRCUIT

RELATED APPLICATIONS

The present invention claims the benefit of U.S. Provisional Application 60/876,868, filed on Dec. 22, 2006, incorporated herein in its entirety by reference.

TECHNICAL FIELD OF THE INVENTION

The present invention is generally related to an improved light circuit for series circuits or series-parallel circuits utilizing incandescent, LED, or other types of lighting sources, and more particularly, the present invention relates to a resistive bypass element that will continue to conduct electricity and keep the remainder of the series circuit of lights lit even when one or more individual lighting elements are burnt out, defective, broken, have a loose connection or a broken connection in the series circuit, including series parallel circuits.

BACKGROUND OF THE INVENTION

Series connected circuits containing lighting sources are well known especially in lighting strings and flexible lighting (Rope Lights) around the holidays when such light strings are used for decorative purposes. More recently, series connected lighting sources are becoming popular in task lighting, general illumination, automotive lighting, and specialty lighting utilizing LEDs. Generally, the lights in these lighting circuits are electrically in series rather than in parallel. One particular drawback to these types of lighting circuits is that when a lighting source is removed from the circuit, is burnt out, defective, or has a loose connection, the entire lighting circuit is rendered inoperable. Each lighting element within the circuit completes the electrical circuit, so when a light source is removed (for a replaceable type), a connection becomes loose, or the lighting element burns out or other lighting component within the light source, a gap is created in the circuit and electricity is unable to continue to flow through the circuit. When a "good" light source is inserted into the circuit or socket, it completes the circuit, thus allowing electricity to flow uninterrupted.

Specifically, Fisherman, U.S. Pat. No. 2,760,120, discloses a series circuit for a light set with individual incandescent flasher or twinkle bulbs that include a bypass resistor in parallel with the bulb element. The operation of the Fisherman light set is limited to a set with a bulb that flashes on and off, a duty cycle of less than 100%. The on time of the bulb is necessary to control heat generation in the resistor, the resistor conducting during the off time of the bulb, thereby regulating the heat produced in the resistor circuit. The Fisherman device cannot be applied to a set wherein a bulb is burnt out, removed, or loose (and not conducting) to continue to illuminate the remaining bulbs in the circuit. In such situation, the bypass resistor is continually conducting and the temperatures generated on any bypass resistor of practical size (let alone one that fits into a socket) will far exceed ignition temperatures of near by materials used in construction of the set. Further, the Fisherman bulb is a high energy bulb, being 8 volt and ¼ amp, for a power consumption of 2 watts. A more energy efficient bulb is in demand at the present time. Presently, bulbs, such as that depicted generally at **500** in prior art FIG. **15**, are utilized. Such bulbs are a considerable improvement when

compared to the Fisherman bulb, having 0.35-0.425 watt power consumption. There is still a need in the industry for a more energy efficient bulb.

While previous mechanical and electrical circuit configurations have been used in an attempt to address the problems described above, none do so with the reliability, simplicity, low cost of the present invention, and reduced energy consumption. The difficulties and drawbacks of previous lighting series circuit configurations are overcome by the resistive bypass for a series light circuit of the present invention.

SUMMARY OF THE INVENTION

The systems and methods of the invention have several features, no single one of which is solely responsible for its desirable attributes. Without limiting the scope of the invention as expressed by the claims which follow, its more prominent features will now be discussed briefly. After considering this discussion, and particularly after reading the section entitled "Detailed Description of the Drawings" one will understand how the features of the light unit for a light string provide several advantages over traditional series light circuit.

Accordingly, it is an object of the present invention to provide a novel and improved bypass circuit for a series light circuit configuration capable of keeping uninterrupted current flow on condition that a light source of the circuit is removed, becomes loose, fails to conduct, or lighting element or other lighting device of the light source burns out, or becomes defective within the light source.

A further object of the present invention is to provide an incandescent bulb of reduced energy consumption while at the same time maintaining the level of brightness apparent to the human eye as is produced by current higher energy consuming bulbs (the standard bulb having a power consumption of 0.35-0.425 watts). The present invention utilizes bulbs that are less than 0.25 watts and are more preferably 0.20 watts. In order to achieve substantially the same brightness as the standard bulb, the bulb of the present invention uses a higher purity tungsten filament, along with a tighter coil for the filament when rated 0.20 watts. Further, to improve the brightness, the filament is placed higher into the bulb canopy, so that losses from the plastic bulb adaptor at the bottom of the bulb do not absorb as much light. This provides for a measurably brighter bulb, and also provides to the human eye an even apparently brighter bulb, as the filament is higher up into the bulb, something that hasn't been done in the industry to date. Such bulbs can be utilized with a duty cycle of 100% and, when disabled, the conducting bypass resistor in the circuit of the present invention does not achieve dangerous temperature levels due to the reduced current flow. The Fisherman device is necessarily restricted to employment with flasher bulbs, and these must be used in a set where the bulbs are never fully off (disabled) so that the bypass resistor is not continually conducting.

Another object of the present invention is to provide the ability to allow for semiconductor light sources, such as light emitting diodes (LEDs), to provide a twinkling affect, by utilizing LED packages that incorporate integrated circuits (ICs) or other types of electronic circuits that control the flashing rate of the light source, which would only effect the individual lighting element as the resistive bypass would allow current to continue to flow in remaining lighting elements in the series circuit. In another embodiment of the invention, one or more semiconductor light sources, each with a flashing circuit, but without an associated bypass

element in parallel, can be located in the lighting circuit in order to flash all the remaining light sources in the series circuit.

In yet another embodiment of the invention, one or more incandescent light sources, each with a flashing device, but without an associated bypass element in parallel, can be located in the lighting circuit in order to flash all the remaining light sources in the circuit.

Yet another object of the present invention is to provide the ability to allow for semiconductor light sources, such as LEDs, to provide color changing characteristics by utilizing LED packages that incorporate two or more LED chips, and an IC, or other electronic circuit, that controls each LED chip in the LED package independently, while the electronic circuit or IC controls the current and/or voltage to the individual LEDs in the LED package, allowing for the mixing of the LED chip colors to get various resultant colors, which would only affect the individual lighting element as the resistive bypass would allow current to continue to flow in remaining lighting elements in the series circuit. Those skilled in the art would also recognize that a zener diode could be used in parallel to the light source and bypass circuit to help regulate the voltage across the light source.

Further objects and features of the invention will be readily apparent to those skilled in the art from the following specification which includes the appended claims and drawings.

To achieve the above objects and in accordance with the purpose of the invention, as embodied and broadly described herein, one embodiment of a light circuit for a series lighting circuit of the present invention comprises lighting sources connected in series with each other, where each lighting source has a resistive bypass element connected in parallel across it.

The embodiment of this device is to provide a low cost resistive bypass element for series connected light sources. The current movement towards low energy incandescent bulbs, LEDs, and other energy saving light sources allows for a simple resistor to be utilized without creating the heating issues previously faced if such a device was attempted. Now with these low power consuming lighting sources, a resistive bypass element becomes the forefront of products, providing a low-cost bypass circuit.

In addition, the use of the resistive bypass element in series connected lighting circuits enables longevity and durability to continue without affect from the failure of any single light source due to defect, or connection issues.

In another embodiment of the present invention, the resistive bypass element may be connected in parallel with more than one light source, where the failure of one bulb would then only affect a limited amount of light sources in the lighting circuit, further saving the cost of bypass resistive elements across each lighting source.

In another embodiment of the present invention, a resistive bypass circuit allows for other types of lighting effects, such as twinkle type products where a semiconductor light source can utilize miniature ICs inside a lighting package, and will only affect that lighting source, allowing the remaining light sources to function independently. Also, more than one light package may have the twinkling effect. For this embodiment, the resistive bypass may only be used across those twinkling effect light sources, as an additional embodiment, or may be used across all lighting sources.

One more embodiment of the resistive bypass circuit is that it also allows for the use of color changing LED packages, that utilize more than one LED chip inside, and may consist of an IC controlled mixing of the LED chips to create other resultant colors, and will only effect that lighting source, allowing the remaining light sources to function independently. Also, more than one light package may have this color changing effect. For this embodiment, the resistive bypass may only be used across those color changing light sources, as an additional embodiment, or may be used across all lighting sources.

The series circuits above with bypass resistors, can also be employed in series—parallel circuits, and be employed in products with or without lampholders, including directly connected to printed circuit boards, as other embodiments of the invention.

The present invention has numerous features and advantages associated therewith.

The bypass circuit of the present invention herein described has an advantage of keeping the remainder of lights within a series lighting circuit lit when a light source is missing from, or becomes loose in, one or more light source sockets or circuits, or becomes defective. This is accomplished by continuing to conduct electricity through the series light circuit even when a light source is broken, loose, poor connection, or defective light source.

The bypass circuit can be utilized in AC or DC circuits powered by batteries, step down transformers, AC utility power, or converters from AC to DC or DC to AC power, pulsed DC, and filtered or unfiltered DC.

As will be realized, the invention is capable of other and different embodiments and its several details are capable of modifications in various respects, all without departing from the invention. Accordingly, the drawing and description are to be regarded as illustrative and not restrictive.

Other objects, advantages and novel features of the present invention will be drawn from the following detailed description of preferred embodiment of the present invention with the attached drawings. The accompanying drawings are included to provide a further understanding of the invention, and are incorporated in and constitute a part of this specification. The drawings illustrate embodiments of the invention and, together with the description, serve to explain the principles of the invention, in which:

BRIEF DESCRIPTION OF THE DRAWINGS

FIG. **1** is a circuit diagram of one embodiment of the present invention where the lighting sources are incandescent bulbs;

FIG. **2** is a circuit diagram of one embodiment of the present invention where the lighting sources include LEDs;

FIGS. **2***a*-**2***c* show various configurations and locations of the current limiting resistor and series and series-parallel configurations of FIG. **2**;

FIG. **2**D shows a circuit diagram of one embodiment using a full wave rectifier with an optional filter capacitor;

FIG. **3** is a diagram of a light string embodiment of the present invention where the lighting sources are incandescent bulbs and the lighting element is a filament;

FIG. **4***a* is a front and side view of a light source assembly where the light source is an incandescent bulb;

FIG. **4***b* is a front and side view of a light source assembly that includes an incandescent light bulb and a resistor;

FIG. **4***c* is a front and side view of a light source assembly that includes an incandescent light bulb, a resistor, and a large-diameter lamp holder;

FIG. **4***d* is a front and side view of a light source assembly showing the brass contacts of the light source assembly and an alternate resistor mounting position;

FIG. **5** is a diagram of a light string embodiment of the present invention where the light sources LEDs and the lighting element is an LED semiconductor chip;

FIG. **6** is a front view of a light source assembly where the light source includes an LED encased in an epoxy lens;

FIG. **7** is a diagram of one embodiment of the present invention that produces a twinkling effect and includes a split construction of a full wave rectifier;

FIG. **8** is diagram of another embodiment of the present invention that produces a twinkling effect and includes traditional full-wave rectification;

FIG. **9** is a front and close-up view of the present invention embodied in a wire tree branch;

FIG. **10** is a front view of a needless artificial tree as used in a lighted green goods system of the present invention;

FIG. **11** is a front view of an artificial tree with needles as used in a lighted green goods system of the present invention;

FIG. **12** is a front view of one embodiment of a lighted green goods system using bypass circuit light strings;

FIG. **13** is a view of a flexible lighting system with a bypass circuit using incandescent light sources;

FIG. **14** is a view of a flexible lighting system with a bypass circuit using LED light sources;

FIG. **15** is an elevational view of a prior art bulb;

FIG. **16** is an elevational view of a bulb of the present invention; and

FIG. **17** is an elevational view of a bulb of a further embodiment of the present invention.

DETAILED DESCRIPTION OF THE DRAWINGS

The resistive bypass circuit **10**, being a set or sting of lights, as shown in FIG. **1** includes a power source **12**, light sources **14**, and bypass resistors **16**. Power source **12** is shown in FIG. **1** is a 120 volt alternating current (AC) power source, power source can be any voltage AC, direct current (DC), AC converted to DC, or DC converted to AC, both filtered or unfiltered DC, and pulsating DC or any other power source that can power the lighting sources. Light sources **14** may include incandescent bulbs, LEDs, or other lighting devices. Light sources **14** of FIG. **1** are incandescent bulbs.

Bypass resistors **16** are configured in parallel with light sources **14**, and combinations of bypass resistors **16** and light sources **14** are configured in series. Light sources **14** and bypass resistors **16** may be packaged together into light source assemblies **18**. When all light sources **14** are operating properly, a portion of the total current flowing through bypass circuit **10** flows through light source **14**, while the remainder flows through bypass resistor **16**.

In the event that a light source **14** ceases to conduct, and current flow is interrupted through that light source **14**, the total current will flow through its corresponding bypass resistor **16**. A missing, broken, or improperly connected light source **14** may cause a light source **14** to fail to conduct. In the case where light source **14** is an incandescent bulb, filament failure, or burnout, may be the cause of a light source failing to conduct. Without bypass resistors **16** operating in parallel with light sources **14**, any failure in a light source **14** would interrupt power to all other light sources **14**. The values of bypass resistors **16** are typically the same, and are chosen such that an appropriate current flows through light sources **14** when all light sources are operating properly.

FIG. **2** illustrates another embodiment of the present invention that uses LEDs as a light source. Resistive bypass circuit **20** includes power source **12**, light sources **26**, optional current limiting resistors **24**, and bypass resistor **28**. Light sources **26**, optional current limiting resistors **24**, and bypass resistors **28** may be packaged together into light source assemblies **22**. In the embodiment shown in FIG. **2**, light source **26** is a single LED, preferably of equal to or less than 0.25 W. In other embodiments, light source **26** may be an LED chip that includes more than one LED. Those skilled-in-the-art will appreciate that the value of current limiting resistors **24** will be chosen based on the type of light source **26**, the number of light sources **26**, the number of bypass resistors **24**, and the number and value of bypass resistors **28**.

In the embodiment shown in FIG. **2**, power source **12** provides power to bypass circuit **20**. When all light sources **26** are operable, current flows through the circuit, with a portion of the total current flows through the path containing current limiting resistor **24** and light source **26**, while the remainder flows through bypass resistor **28**. When current flow is interrupted through a light source **26**, total current flows through the corresponding bypass resistor **28**, allowing the remaining light sources **26** to operate.

Resistive bypass circuits **10** and **20** may be used with any series, or series-parallel connected lighting device where failure of the bulb or its connection will turn off some or all of the bulbs. This includes mini-bulb lighting strings used for Christmas and other holiday decorative lighting, rope lights (also known as flexible lighting) and other general lighting applications that use series connected lamps or LEDs, such as a LED desk lamp, or under-counter light.

Power source **12** is shown in FIG. **2** is a 120 volt alternating current (AC) power source, power source can be any voltage AC, direct current (DC), AC converted to DC, or DC converted to AC, both filtered or unfiltered DC, and pulsating DC, or any other power source that can power the lighting sources.

FIGS. **2***a*-**2***c* show various configurations and locations of the current limiting resistor and series and series-parallel configurations of FIG. **2**. FIGS. **2***a* and **2***b*, show light source assemblies, **22**, that contain only the light source, **26**, and the bypass resistor, **28**, with the current limiting resistor located outside of the light source assembly **22**.

FIG. **2**D shows a circuit diagram utilizing a filtered full wave rectifier, **82** with an optional filter capacitor **84**. The full wave rectifier could be replaced by a single rectifier diode, **76**, to produce ½ wave rectification, and can be optionally filtered by capacitor **84**. If a large enough capacitor **84** is selected, utilizing a single diode, **76**, it could simulate full wave rectification to the circuit.

It was desired to utilize incandescent bulbs with the resistive bypass circuit **10** as shown in FIG. **1**. In order to make the resistor set **10** work with modem, high temperature materials, it was needed to reduce the wattage of the bulbs to at least 0.25 W (standard bulbs in the industry are either the common 0.425 W bulb, or the less common 0.35 W bulb, as noted in prior art FIG. **15**), but it is preferable to use 0.20 Watts. Sets using 0.25 W bulbs are on the edge of passing ANSI/UL standards, a critical condition for placing such sets in the marketplace. The 0.20 W bulbs, on the other hand, more safely allow the set to operate, however, either could be used.

While the 0.25 W bulbs (2.5 V, 100 mA) were close in brightness to the 0.425 W bulbs (2.5 V, 170 mA) that are commonly used, by using a thinner filament wire or other techniques to compensate for lumen output, the brightness of the 0.25 watt bulb is substantially equal to the standard 0.425 bulb. A conventionally constructed 0.20 W bulb (2.5V,

80 mA) bulb is even dimmer than the 0.35 W bulb (2.5V, 140 mA), and in the holiday market, the market demands bright bulbs.

To make up for the shortcomings of a conventionally constructed 0.20 W bulb, the bulbs of the present invention, noted generally at **600** in FIGS. **16** and **17**, employ a higher purity tungsten filament, along with a tighter coil of the filament **602**. Further, the filament **602** is disposed higher into the bulb canopy **608** by the dimension H, noted in FIG. **15**. The filament **602** is connected by relatively longer leads **604** than the leads **504** of the prior art that support the prior art filament **502**. An advantage of such disposition is that losses from the plastic bulb adaptor **606** at the bottom of the bulb **600** did not absorb as much light. Such disposition of the filament **602** provides for a measurably brighter bulb **600**, and also, as viewed by the human eye, an even brighter bulb **600** is perceived as compared with the prior art construction of FIG. **15**, as the filament **602** is higher up into the bulb canopy **608**, a construction that hasn't been done in the industry.

Further, to enhance the brilliance of the reduced wattage, one version of the low energy bulb **600** of the present invention, the filament **602** is formed of a purer form of tungsten and is of thinner construction as compared to the prior art bulb **500**. Additionally, the filament **602** is wound tighter than the filament **502** of the prior art. However, one skilled in the art would recognize that if brighter bulbs were not desired, standard bulb construction could be utilized.

In addition, as noted with respect to FIG. **2** above, resistor sets **10** may be employed with light sources **26** being LEDs. Such LEDs typically operate at much lower current (20 mA) with a power draw of 0.08 W or less, and therefore allow for very cool operation of the resistor bypass circuit **28**, even when the bypass resistor **28** is continually conducting. In either case, there is substantial energy savings. In another embodiment, higher power LEDs or several LEDs in parallel may be employed across the bypass resistor.

The above noted features allow the resistor bypass circuit **10** to operate as a twinkling set by inserting a flasher bulb into any part of the circuit or, if provided, into a socket. Flasher bulbs are bulbs where a bimetallic strip heats, and open circuits the bulb (see for example, Fisherman), where a normal holiday light set that creates a twinkling effect has to use twinkling bulbs, where when the bimetallic strip is heated by the filament, it shorts out the bulb, allowing the remaining bulbs to light. In such sets where the bulbs short, ANSI/UL has very stringent requirements for construction and operation. In contrast however, in the resistor bypass set **10** of the present invention, use of a flasher bulb is not restricted, nor does it pose any additional safety concerns, as when the flasher bulb open circuits, it allows the resistor bypass set to work as it would normally, and actually reduces the current to the remaining bulbs, allowing the remaining bulbs to run cooler, as compared to the twinkle bulb set where it operates hotter when one or more bulbs is in the shorted condition.

The resistor bypass set **10** also has the advantage of being a safer set than the standard mini light sets that commonly use a shunt wire inside the bulb to allow the current to continue flowing, as sets containing shunted bulbs create short circuits across the bulb, further dividing the input voltage by the remaining bulbs, increasing the power drop across each bulb. The increased power drop increases the surface temperature of the bulb, and causing the remaining bulbs in the set to burn out faster. This repeated action causes the bulbs to become very hot, where as the resistor bypass set **10** of the present invention operates such that every bulb failure, places a higher resistance into the set than the bulb it replaces, causing the remaining bulbs to proportionally dim, causing them to increase their life, and to run cooler. However, the resistor could be sized such that the current is not reduced, and may remain relatively constant, or even slightly increase, depending on the effect desired.

FIG. **3** is an embodiment of the present invention in the form of a series-connected decorative light string **30**. Decorative light string **30** includes power plug **32**, optional light source assemblies **34**, incandescent bulbs **36** and bypass resistors **16**. Power plug **32** may directly plug into utility power (120V, 208V, 220V, 240V, 280V, etc), connect to a step down power supply (such as a Class 2 power supply) or may be omitted for direct connection to a power source. As shown in FIG. **3**, incandescent bulbs **36** may be a miniature bulb-type (mini bulb) operating on 2.5 VAC at 70-120 mA, or some other low current draw bulb. Resistors **16** may be in the range of 30 ohms to 60 ohms, though the value of resistors **16** will vary according to the total current flow desired, as well as according to other factors mentioned above. Resistors **16** are configured in parallel with light sources **36**. Light source assemblies **34**, if provided, are configured electrically in series with each other. As indicated earlier, when a light source assembly **36** fails, total system current will flow through the corresponding bypass resistor **16**, allowing the other light sources **36** to remain lit.

In one embodiment of the decorative light string **30** includes one or more light source assemblies **34** that includes a flashing device, but does not include a bypass element **16** in parallel, causing all of the remaining light source assemblies **34** in the series circuit of decorative light string **30** to flash.

Some methods of making light source assemblies **34** are further described in FIGS. **4***a*-*d*, but the present invention is not limited to the embodiments depicted in the figures. FIG. **4***a* illustrates a light source assembly **34***a* including a light source **36***a* in the form of a mini bulb, and a lamp holder **35***a*. FIG. **4***b* illustrates a light source assembly **34***b* that includes a light source assembly **34***b*, a light source **36***b* in the form of a mini bulb, a bypass resistor **16**, and a lamp holder **35***b*. Lamp holder **35***b* may be larger than lamp holder **35***a* to accommodate bypass resistor **16**. Bypass resistor **16** is connected across light source **36***b* in parallel. The connection may be accomplished by soldering, crimping, friction fit, compression fit, or other means, including connecting to a pair of brass contacts (not shown), to the leads of light source **26***b*, or to other conductors.

FIG. **4***c* illustrates yet another light source assembly, light source assembly **34***c*, which includes a light source assembly **34***c*, a light source **36***c* in the form of a mini bulb, a bypass resistor **16**, and a lamp holder **35***c*. In this embodiment, lamp holder **34***c* is even larger than lamp holder **35***b*.

FIG. **4***d* illustrates another light source assembly, light source assembly **34***d*, which includes a light source assembly **34***d*, a light source **36***d* in the form of a mini bulb, a bypass resistor **16**, and a lamp holder **35***d*. In this embodiment, lamp holder **34***d* may be longer than lamp holder **35***b*. In the embodiment shown in FIG. **4**, one lead of bypass resistor **16** can be crimped to the brass contact. The other lead of bypass resistor **16** may be crimped to a second brass contact **17**, or connected by other means, such that it is electrically in parallel with light source **36***d*. Other means includes being connected to the leads of light source **36**. In addition to crimping, soldering, friction fit, compression, and other common connection means may be employed.

In yet another embodiment, light sources **36** may be mini bulbs filled with an inert gas. Since the use of a bypass

resistor **16** has the potential to decrease current flow through light sources **36**, an inert gas, such as Krypton, can be used in place of a vacuum to allow for the bulb filament to burn whiter and maintaining the same bulb life expected from mini bulbs and get even closer to a standard mini bulb brightness.

Lamp holders **35** of light source assemblies **34** may include molded lamp holders, assembled-on lamp holders, heat-shrink formed lamp holders, and other types of lamp holders. Light sources **36** may be removable, or non-replaceable. In another embodiments, the light source assemblies **34** may by mounted on a rigid or flexible printed circuit board, or connected directly to conductors or wires.

Another embodiment of the present invention is a light string **40** as shown in FIG. **5**. Light string **40** includes an optional power plug **42**, light sources **26**, current-limiting resistors **24**, and bypass resistors **28**. Light sources **26**, current limiting resistors **24**, and bypass resistors **28** may be packaged together into light source assemblies **44**. The embodiment as shown works substantially as described above.

One embodiment of light source **44** is shown in FIG. **6**. Lamp holder base **33** houses bypass resistor **28**, brass contacts **17**, and the ends of wires **45**. Bypass resistor **28** is connected to brass contacts **17** or other contact material to create a parallel configuration. Brass contacts **17** may be crimped on to wires **45** or other conductors. The optional lamp holder adapter **48** attaches to epoxy or some other material lens **46**. The lens **46** encases light source **26**, where light source **26** in this embodiment is an LED.

In another embodiment, the bypass resistor **28**, may be located directly across the LED leads **49** outside of any optional lens material, **46**.

In an alternate embodiment, the bypass resistor **28** may be located within the LED lens material **46** in parallel with the LED, or even inside the glass bulb envelope for incandescent bulbs.

FIG. **7** illustrates another embodiment of the present invention, light string **50**, that utilizes partial rectification and blinking LEDs inside the epoxy lens. Light string **50** includes a power plug **52**, end connect **53**, and light source assemblies **54** and **56**. Light source assemblies **54** are connected in a series configuration. Light source assemblies **56** are connected to the series-connected light sources **54** as shown in FIG. **7**.

Light source assemblies **56** includes a bypass resistor **58**, optional current limiting resistor **60**, light source **62**, which in this embodiment is an LED, and diode **64**. Light source assembly **56** may also includes a lamp holder (not shown), similar to the ones described above.

Light source assemblies **54** includes a bypass resistor **58**, optional current limiting resistor **60**, and light source **62** or light source **66**. In this embodiment, light source **62** is an LED chip, and light source **66** is a "blinking" LED that incorporates a chip that turns the LED on and off for a blinking or flashing effect. Operation of light source **66** is independent of the other light sources **62** due to the bypass resistor **58**. Light source assembly **54** may also includes a lamp holder (not shown), similar to the ones described above. Circuit **50** may utilize more than one blinking LED **66**, per circuit, or may only include blinking LED **66** as its light source.

In this embodiment, diodes **64** provide full-wave rectified power to light source assemblies **54**, causing light sources **62** and **66** of light source assemblies **54** to remain lit throughout most of the AC power cycle. Light source assemblies **56** receive partial rectification due to the particular configuration of FIG. **7**, causing light sources **62** of light source assemblies **56** to be powered throughout approximately half the AC power cycle.

When light source **66** is a blinking LED chip as shown in FIG. **7**, current is periodically interrupted to the LED on the chip. Without bypass resistors **58**, this would cause all light sources in light string **50** to lose power due to an interruption of current flowing through the series-connected circuit. However, bypass resistor **28** allows current to continue flowing, maintaining power to other light sources **62** and **66**. Under normal operation, light source **66** will cause its LED to blink on and off, creating a twinkling effect, while other light sources **62** remain powered and lit. The use of multiple light sources **66** in a light string **50** creates a desirable twinkling effect as light sources **66** turn on and off, while light sources **62** remain lit.

In another embodiment, Light source **66** may be a multi LED chip configuration, programmed to change the light output color of the light source. Alternate embodiments may use a light source **66** where the bypass device **80** is an electronic circuit, or integrated circuit across the LED leads inside or outside of the epoxy housing/lens.

FIG. **8** illustrates another embodiment where, a resistive bypass circuit **70** utilizes full-wave rectification to provide power to all light sources **62** and **66**. Resistive bypass circuit **70** includes an AC power source **72**, full-wave rectifier **74** with optional filter capacitor (not shown), main current limiting resistor **78**, bypass resistors **80**, light sources **66** and **62**. Full-wave rectifier **74** includes four diodes **76**. Full wave rectifier **74** may optionally employ one diode **76**, and a sufficiently sized filter capacitor to simulate full wave rectification. The AC power source **72** may be any source voltage.

In this embodiment, full-wave rectifier **74** provides DC power for bypass circuit **70**. Main current limiting resistor **78** limits the total amount of current flowing through circuit **70** and is sized partially based on the number of light sources **62** and **66**. The use of a single current limiting resistor **78** rather than multiple current limiting resistors simplifies design and manufacturing efforts, but may optionally be manufactured with multiple current limiting resistors as described in the embodiments above. Lights source **66** in the form of blinking LED chips, along with bypass resistors **80** create a twinkling effect when embodied in a light string. The size of bypass resistor **80** depends on the electrical characteristics of light source **66**, but in one embodiment may be 300 to 600 ohms. In some embodiments, bypass resistor **80** may only be used in conjunction with light sources **66**, and not with light sources **60**. This configuration would enable the twinkling effect, but would eliminate the bypass function at light sources **62**.

Another embodiment is the use of circuit **70** in a DC-supplied circuit, such that full wave rectifier **74** is not required. Additional embodiments of circuit **70** are configured in a series-parallel configuration. In another embodiment, light source **66** may be a multi LED chip configuration, programmed to change the light output color of the light source.

FIG. **9** depicts a decorative lighting sculpture **90** that includes an optional power plug **91**, wires **98**, optional connectors **96**, main rod **92**, branches **94**, wires **100** and light source assemblies **102**. Power plug **91** may be connected in one embodiment to a 45 VDC to 50 VDC class 2 transformer with an output of 1.2 A, though other voltage ranges and power sources may be used. Alternatively, light sculpture **90** may not include power plug **91** and may be directly connected a power source. Light source assemblies **102** may be

similar in configuration to the other light source assemblies described above, utilizing incandescent bulbs, LEDs, or other light sources configured in parallel with a bypass resistor.

In alternate embodiments, the bypass resistor may be replaced by bypass circuits utilizing transistors or other electronic active circuits.

The circuits and light strings of the present invention as applied to artificial trees, wreaths, garlands, and other artificial greenery, or alternatively to medium to large decorative products, such as stars, figures, icons and other decorative products provide a number of advantages. Replacing light strings due to light sources that have failed on a light string that is attached to an artificial tree or other decorative product, can be a difficult task since the string is not easily removed from the tree or products and the use of electric testers is not practical due to the fields such products produce with the volumes of wires and optional metal support structures. The bypass circuits and light sets described herein ensure that the light string will continue to remain lit even in the event of a light source failure, meaning that the entire light string does not have to be removed from the tree or decorative product. The combination of circuits, light strings and tree make a reliable, convenient lighted green goods system. FIGS. **10-12** depict some of the artificial trees used in such a lighted green goods system.

FIG. **10** shows one version of an artificial tree **140** that includes a tree trunk **148**, branches **142**, branch mains **144**, and sub-branches **146**. Artificial tree **140** may be constructed of a combination of many materials as described above. In this embodiment, artificial tree **140** is constructed primarily of painted metal, or in another embodiment made primarily of plastic, or a combination of plastic and metal.

FIG. **11** shows another version of an artificial tree, **140'**. Artificial tree **140'** includes tree trunk **148'**, branches **142'**, branch mains **144'**, sub-branches **146'** and needles **149**. Needles **149** are commonly derived from PVC, nylon, and/or PE and may be green in color to make artificial tree **140'** appear to be an evergreen or pine tree. In another embodiment it may use white needles and branches for different aesthetics.

FIG. **12** light string, such as light string **30**, **40**, **50**, **70**, or a combination thereof, attached to branches **142** of tree **140** to form a pre-lit tree system **200**. Light strings **30**, **40**, **50**, **70**, or other embodiments of the present invention, may be similarly attached to trees **140'**. Light string **30**, **40**, **50**, **70** is shown attached to tree **140** via clips **150**. Clip **150** may include but are not limited to C clips, snap lock clips, and wire ties.

FIGS. **13** and **14** depict the present invention in the form of flexible lighting, or rope lighting. Flexible lighting **300** as depicted in FIG. **13** includes an outer encasement **302**, end cap **304**, power cap **306**, power cord **308**, power plug **310**, and one or more bypass circuits **312**. Flexible lighting **300** may operate on 120 VAC, which is transmitted through power plug **310** and power cord **308**, though other voltages may be used, and the input may be rectified or DC. Outer encasement **302** is typically made of a PVC material, and houses bypass circuit **312**. Power cap **306** assists in attaching power cord **308** to bypass circuit **312** and may attach to outer encasement **302** by any number of known methods.

Bypass circuits **312** are series circuits and each bypass circuit **312** is connected in parallel with the other. Bypass circuit **312** includes a plurality of light sources **314** electrically connected in parallel with bypass resistors **320**. Light sources **318** may be incandescent bulbs, LEDs, or other light sources. As described in previous embodiments, bypass resistor **320** may be replaced with another active circuit device. Bypass circuit **312** may also include conductors **314** and **316** which extend the length of flexible lighting **300** and provide power to the bypass circuits **312** when more than one circuit **312** is employed.

Operation of flexible lighting **300** is similar to those embodiments described above. During normal operation, current flows through both light source **318** and bypass resistors **320**. If light source **318** fails, the entire bypass circuit **312** current flows through bypass resistor **320**, allowing flexible lighting **300** to stay lit.

FIG. **14** depicts a similar flexible lighting system that relies on LEDs, rather than incandescent bulbs. Flexible lighting **400** as depicted in FIG. **14** includes an outer encasement **402**, end cap **404**, power cap **406**, power cord **408**, power plug **410**, and one or more bypass circuits **412**. Flexible lighting **400** may operate on 120 VAC, which is transmitted through power plug **410** and power cord **408**, though other voltages may be used, and the input may be rectified or DC. Outer encasement **402** is typically made of a PVC material, and houses bypass circuit **412**. Power cap **406** assists in attaching power cord **408** to bypass circuit **412** and may attach to outer encasement **402** by any number of known methods.

Bypass circuits **412** are series circuits and each bypass circuit **412** is connected in parallel with the other. Bypass circuit **412** includes a plurality of LEDs **414** electrically connected series with resistors **419**. Series connected LEDs **414** and resistors **419** are electrically in parallel with bypass resistors **420**. Light sources **418** may be LEDs, or other light sources. As described in previous embodiments, bypass resistor **420** may be replaced with another active circuit device. Bypass circuit **412** may also include conductors **414** and **416** which extend the length of flexible lighting **400** and provide power to the bypass circuits **412** when more than one circuit **412** is employed. The number or location of resistors **419** in each circuit **421** may vary based on circuit requirements, with some bypass circuits **412** not including a resistor **419**. In other embodiments, resistor **419** may be located external to circuit **421**, and in line with circuit Bypass circuit **412**.

Operation of flexible lighting **400** is similar to those embodiments described above. During normal operation, current flows through both light source **418** and bypass resistors **420**. If light source **418** fails, the entire bypass circuit **412** current flows through bypass resistor **420**, allowing flexible lighting **400** to remain lit.

Other embodiments of flexible lighting **300** and **400** may incorporate twinkling, flashing and color changing properties as previously described above.

It is desired to utilize incandescent bulbs with the embodiment of FIG. **1**. In order to make the resistive bypass set **10** function with modem, high temperature materials, it was needed to reduce the wattage of the bulbs to at least 0.25 W (standard bulbs in the industry are the 0.30 W bulb). It is preferable to use bulbs of 0.20 Watts. Sets using 0.25 W bulbs are on the edge of passing ANSI/UL standards, a critical condition for placing the resistive bypass set **10** in the marketplace. The 0.20 W bulbs, on the other hand, safely allows the set to operate and readily meet ANSI/UL standards, however, either 0.25 W or 0.20 W bulbs could be used.

In addition, the resistor sets with LED sources can also be employed, and as those typically operate at much lower current (20 mA) drawing approximately 0.08 W, those allow for very cool operation of the resistor bypass circuit. Addi-

tional embodiments may use a higher power LED or multiple LEDs connected in parallel across the resistive element.

Both of these lighting changes (lower wattage/higher brightness bulbs, and LEDs) were not anticipated, or contemplated by Fisherman, therefore only restricting it to flasher bulbs, and the use in such a set where the bulbs are never fully off.

In addition, this allows our resistor bypass set to operate as a twinkling set by inserting a flasher bulb into any circuit. Flasher bulbs are bulbs where the bimetallic strip heats, and open circuits the bulb, where a normal holiday light set that creates a twinkling effect has to use twinkling bulbs, where when the bimetallic strip is heated by the filament, it shorts out the bulb, allowing the remaining bulbs to light, however, in such sets where the bulbs short, ANSI/UL does not allow for such constructions in flexible (rope) lighting. However, in the resistor bypass set, use of a flasher bulb is not restricted, nor does it pose any additional safety concerns, as when the flasher bulb open circuits, it allows the resistor bypass set to work as it would normally, and actually reduces the current to the remaining bulbs, allowing to run cooler, vs. the twinkle bulb set where it operates hotter when one or more bulbs is in the shorted condition.

The resistor bypass set also has the advantage providing a shunting circuit, as ANSI/UL standards do not allow for shunts that short circuit the bulb in rope (flexible) lighting, as the bulbs are not replaceable, and shorts caused by shunt wires in or out to the bulb would create an unsafe condition as more and more bulbs burn out. A shunt wire inside the bulb to allow the current to continue flowing, as those bulbs create short circuits, further dividing the input voltage by the remaining bulbs, increasing the power drop across each bulb, thereby increasing the surface temperature of the bulb, and causing the subsequent bulb to burn out faster, and this repeated action causing the bulbs to become very hot, where as the resistor bypass set operates such that every bulb failure, places a higher resistance into the set than the bulb it replaces, causing the remaining bulbs to proportionally dim, causing them to increase their life, and run cooler. However, the resistor could be sized such that the current is not reduced, and may remain relatively constant.

In addition to decorative lighting, the bypass circuits of the present invention may also be used in general lighting applications including portable lighting, auto lighting, traffic lights and the like.

The invention addresses many of the deficiencies and drawbacks previously identified. The invention may be embodied in other specific forms without departing from the essential attributes thereof; therefore, the illustrated embodiments should be considered in all respects as illustrative and not restrictive. The claims provided herein are to ensure adequacy of the present application for establishing foreign priority and for no other purpose.

What is claimed is:

1. A resistor bypass circuit for a series lighting circuit comprising a plurality of serially connected LED light sources and a bypass resistor being connected in parallel with at least one of the respective light sources, said bypass resistor being in circuit and conducting current at all times when current is flowing through the circuit regardless of whether the LED light sources are conducting current therethrough and wherein said bypass resistor is capable operating on a one hundred percent duty cycle.

2. The resistor bypass circuit of claim **1**, where the circuit is series-parallel connected.

3. The resistor bypass circuit of claim **1** wherein at least one of the light sources is a semiconductor providing a twinkling effect, and wherein the semiconductor light source utilizes electronic circuits that control the flashing rate of the light source.

4. The resistor bypass circuit of claim **1**, wherein the LED light source uses 0.20 watts or less.

5. The resistor bypass circuit of claim **1**, at least one of the light sources is a semiconductor light source providing a twinkling effect.

6. The resistor bypass circuit of claim **1**, at least one of the light sources is a semiconductor light source utilizing electronic circuits that control the flashing rate of the light source, which would only affect the individual lighting element as the resistive bypass would allow current to continue to flow in remaining lighting elements in the series circuit.

7. The resistor bypass circuit of claim **1**, wherein said light source is a blinking LED with a first state allowing current to flow through the device and a second state where the light source is an open circuit, whereby remaining light sources in the light string operate with current passing through the bypass resistor when the light source is in the second state.

8. The resistor bypass circuit of claim **1** being utilized in AC or DC circuits powered form a power source selected from the list consisting of batteries, step down transformers, AC utility power, or converters from AC to DC or DC to AC power, pulsed DC, and filtered or unfiltered DC, or partially filtered AC.

9. A resistor bypass circuit for a series lighting circuit comprising a plurality of serially connected LED light sources and a bypass resistor being connected in parallel with at least one of the respective light sources, said bypass resistor being in circuit and conducting current at all times when current is flowing through the circuit regardless of whether the LED light sources are conducting current therethrough and wherein said bypass resistor is capable operating on a one hundred percent duty cycle further including an LED flashing light source which includes a flashing circuit which causes the entire light circuit to flash.

10. A resistor bypass circuit for a series lighting circuit comprising a plurality of serially connected LED light sources and a bypass resistor being connected in parallel with at least one of the respective light sources, said bypass resistor being in circuit and conducting current at all times when current is flowing through the circuit regardless of whether the LED light sources are conducting current therethrough and wherein the resistance of the bypass resistor is equal to or greater than the inherent resistance of the light source to which the resistor is attached, thereby minimizing the burn out potential of other light sources in the light string.

11. The resistor bypass circuit of claim **10**, the light source being a semiconductor light source for providing color changing characteristics.

12. The resistor bypass circuit of claim **10**, the semiconductor light source utilizing LED packages that incorporate two or more LED chips, and an integrated circuit (IC), the integrated circuit controlling each LED chip in respective LED packages independently.

13. The resistor bypass circuit of claim **12**, the IC controlling the current and/or voltage to the individual LED chips in the LED package, the control providing for the mixing of the LED chip colors to get various resultant colors.

14. The resistor bypass circuit of claim **13**, the control only affecting individual lighting element, the bypass resistor providing for current continuing to flow in remaining lighting elements in the series circuit.

* * * * *

EXHIBIT D

US011533794B2

(12) **United States Patent**
Altamura

(10) **Patent No.: US 11,533,794 B2**
(45) **Date of Patent: Dec. 20, 2022**

(54) **RESISTIVE BYPASS FOR SERIES LIGHTING CIRCUIT**

(71) Applicant: **Seasonal Specialties, LLC**, Eden Prairie, MN (US)

(72) Inventor: **Steven J. Altamura**, Scarsdale, NY (US)

(73) Assignee: **Seasonal Specialties, LLC**, Eden Prairie, MN (US)

(*) Notice: Subject to any disclaimer, the term of this patent is extended or adjusted under 35 U.S.C. 154(b) by 20 days.

(21) Appl. No.: **17/400,338**

(22) Filed: **Aug. 12, 2021**

(65) **Prior Publication Data**

US 2021/0378063 A1 Dec. 2, 2021

Related U.S. Application Data

(60) Continuation of application No. 16/693,552, filed on Nov. 25, 2019, now Pat. No. 11,096,252, which is a continuation of application No. 15/899,264, filed on Feb. 19, 2018, now Pat. No. 10,492,282, which is a continuation of application No. 14/840,705, filed on Aug. 31, 2015, now Pat. No. 9,900,968, which is a continuation of application No. 14/052,124, filed on Oct. 11, 2013, now abandoned, which is a continuation of application No. 12/947,488, filed on Nov. 16, 2010, now abandoned, which is a division of application No. 11/962,964, filed on Dec. 21, 2007, now Pat. No. 7,851,981.

(60) Provisional application No. 60/876,868, filed on Dec. 22, 2006.

(51) **Int. Cl.**

H05B 39/04	(2006.01)
H05B 47/23	(2020.01)
H01J 9/00	(2006.01)
H01K 3/00	(2006.01)

(52) **U.S. Cl.**

CPC ***H05B 39/041*** (2013.01); ***H01J 9/00*** (2013.01); ***H01K 3/00*** (2013.01); ***H05B 47/23*** (2020.01)

(58) **Field of Classification Search**

CPC H05B 39/041; H05B 37/036; H05B 47/23; H01J 9/00; H01K 3/00; F21S 4/00; F21V 19/0005; F21W 2121/04

See application file for complete search history.

(56) **References Cited**

U.S. PATENT DOCUMENTS

1,024,495	A	4/1912	Booth
1,510,847	A	4/1922	Holder
1,865,689	A	6/1929	Brander
1,868,689	A	7/1932	Brander
2,072,337	A	3/1937	Kamm
2,152,228	A	5/1937	Waters
2,145,911	A	2/1939	Waldemar et al.
2,760,120	A	8/1956	Fisherman
3,260,888	A	7/1966	Webb
3,345,482	A	10/1967	Lou
3,461,921	A	8/1969	Ackerman

(Continued)

Primary Examiner — Anne M Hines
(74) *Attorney, Agent, or Firm* — Hamre, Schumann, Mueller & Larson, P.C.

(57) **ABSTRACT**

A resistor bypass circuit for a series lighting circuit includes a plurality of serially connected light sources and a bypass resistor being connected in parallel with at least one of the respective light sources, each respective light source being low wattage and being capable operating on a one hundred percent duty cycle as desired.

15 Claims, 16 Drawing Sheets

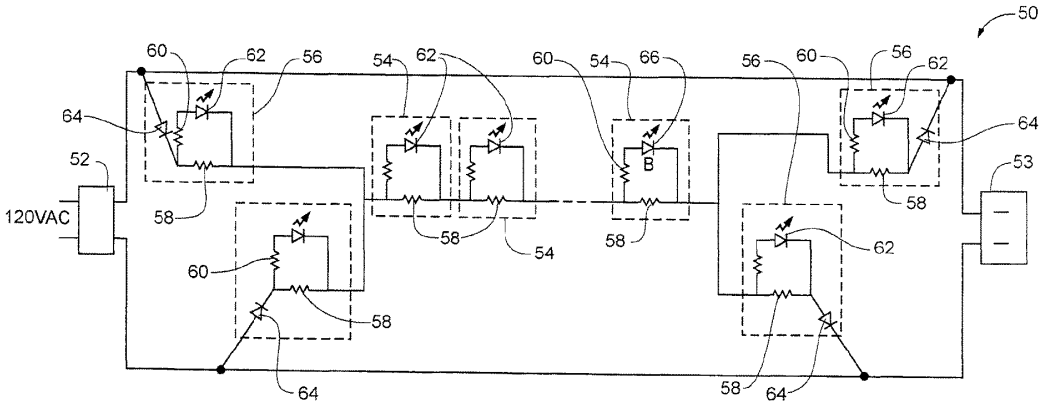

(56) **References Cited**

U.S. PATENT DOCUMENTS

3,868,230	A	2/1975	Krukonis	
3,912,966	A	10/1975	Harnden, Jr.	
3,942,063	A	3/1976	Winter et al.	
4,463,278	A	7/1984	Kosmatka et al.	
4,464,600	A	8/1984	Kosmatka et al.	
4,629,943	A	12/1986	Ponce, Jr.	
4,727,449	A	2/1988	Fleck	
4,985,001	A	1/1991	Nagai	
5,453,664	A	9/1995	Harris	
5,777,868	A	7/1998	Gibboney, Jr.	
5,886,423	A *	3/1999	Gershen	H05B 39/105 315/179
6,084,357	A	7/2000	Janning	
6,283,797	B1	9/2001	Wu	
6,323,597	B1	11/2001	Janning	
6,344,716	B1	2/2002	Gibboney, Jr.	
6,555,948	B1	4/2003	Noll	
6,580,182	B2	6/2003	Janning	
6,597,125	B2	7/2003	Janning	
6,690,103	B1	2/2004	Uke	
6,765,313	B2	7/2004	Janning	
6,929,383	B1	8/2005	Janning	
7,042,116	B2	5/2006	Janning	
7,166,968	B2	1/2007	Janning	
7,178,961	B2	2/2007	Janning	
7,261,458	B2	8/2007	Janning	
7,342,327	B2	3/2008	Janning	
7,666,036	B1	2/2010	Zou	
7,851,981	B2	12/2010	Altamura	
7,963,670	B2	6/2011	Yu	
8,450,950	B2	5/2013	McRae	
8,860,328	B2	10/2014	McRae	
8,941,312	B2	1/2015	McRae	
9,433,057	B1	8/2016	Janning	
9,510,406	B2	11/2016	McRae	
9,510,423	B1	11/2016	Janning	
9,544,437	B2	1/2017	Zubas et al.	
9,900,968	B2	2/2018	Altamura	
10,080,265	B2	9/2018	Altamura et al.	
10,333,252	B1	6/2019	Altamura	
11,096,252	B2	8/2021	Altamura	
2003/0117021	A1	6/2003	Janning	
2005/0174065	A1	8/2005	Janning	
2005/0205971	A1	9/2005	Janning	
2018/0199419	A1	7/2018	Altamura	

* cited by examiner

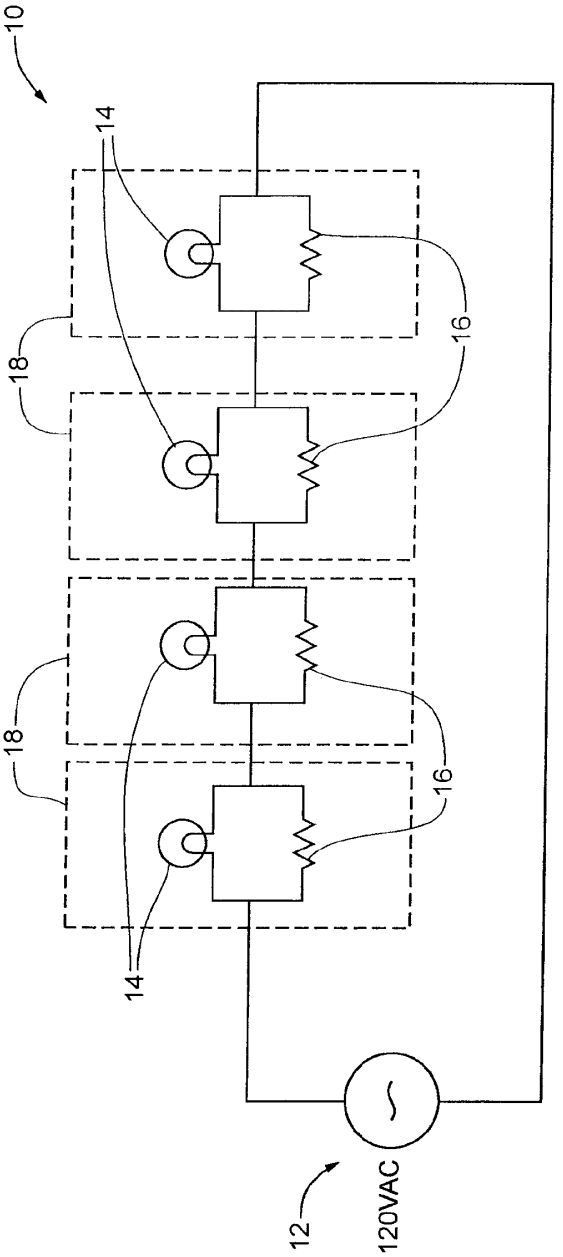

Fig. 1

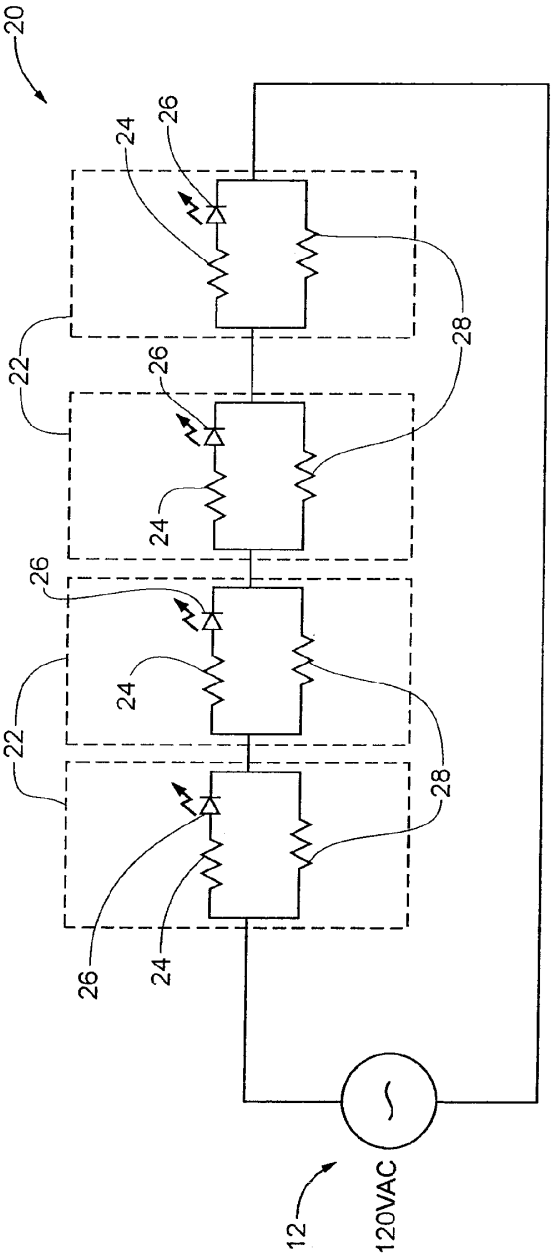

Fig. 2

Fig. 2a

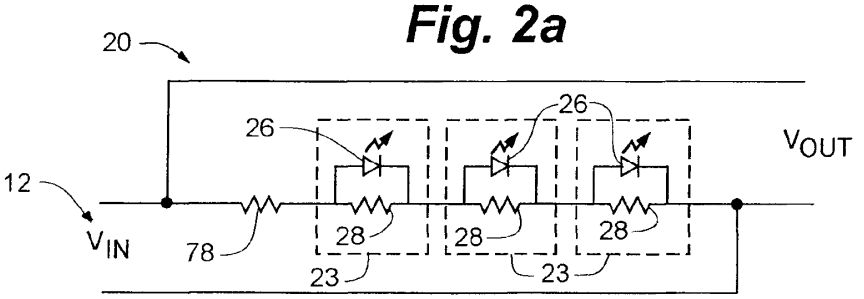
20
26
26
VOUT
12
VIN
78
28
28
28
23
23

Fig. 2b

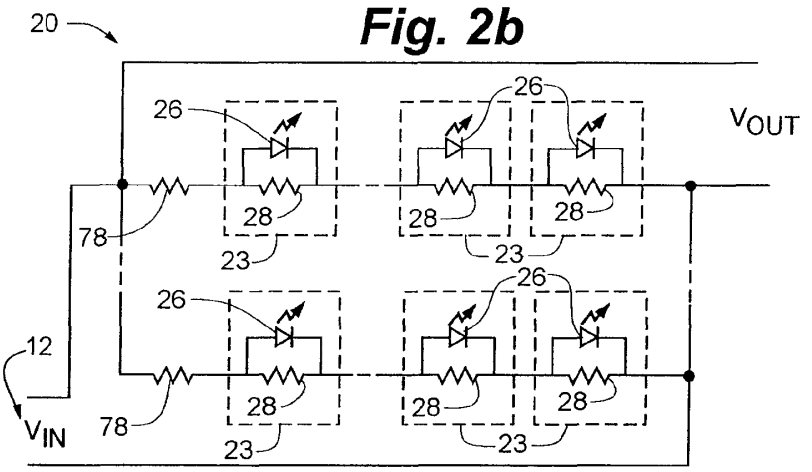
20
26
26
VOUT
78
28
28
28
23
23
26
26
12
VIN
78
28
28
28
23
23

Fig. 2c

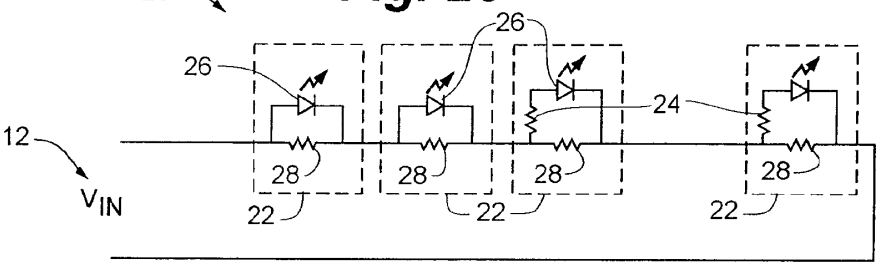
20
26
26
24
12
28
28
28
28
V_{IN}
22
22
22

Fig. 2d

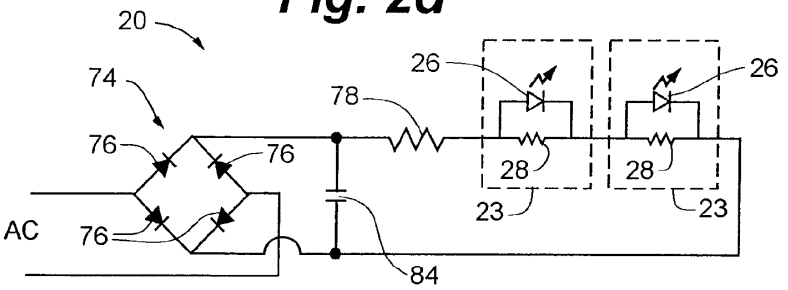
20
74
26
26
78
76
76
28
28
23
23
AC
76
84

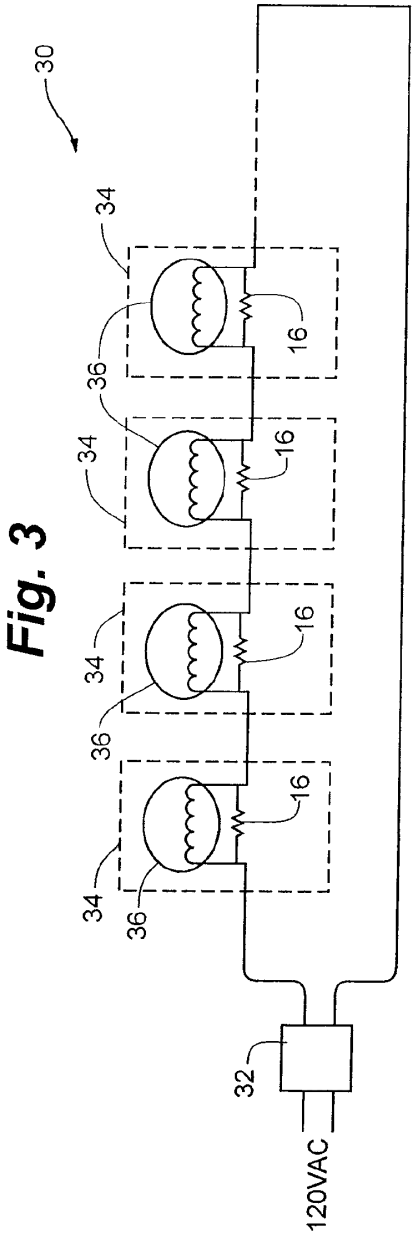

Fig. 3

Fig. 4a

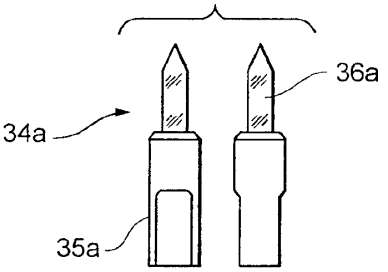

Fig. 4b

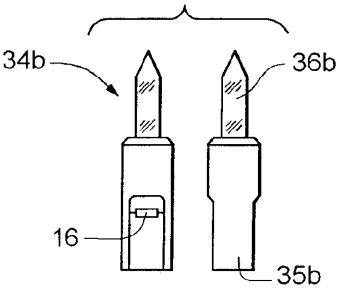

Fig. 4c

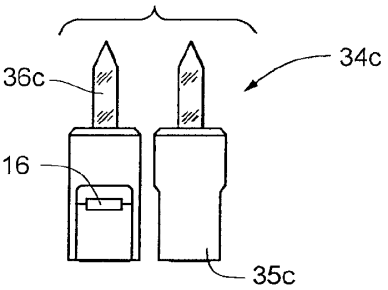

Fig. 4d

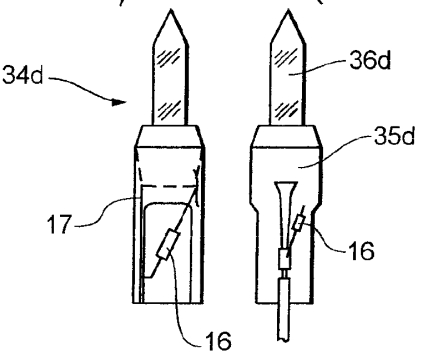

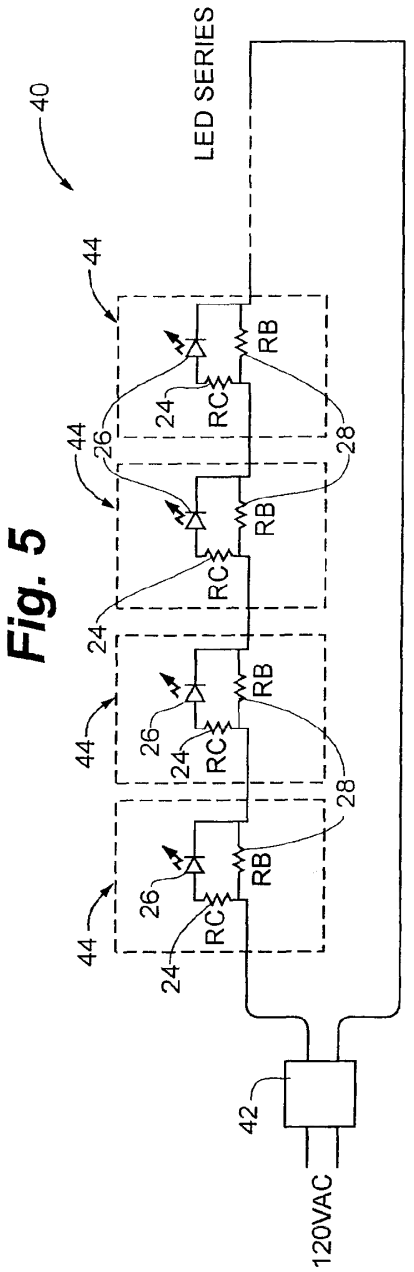

Fig. 5

Fig. 6

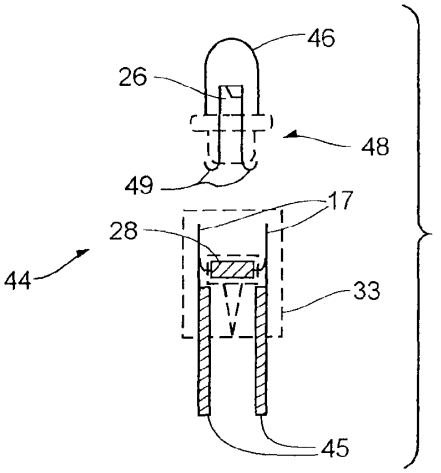

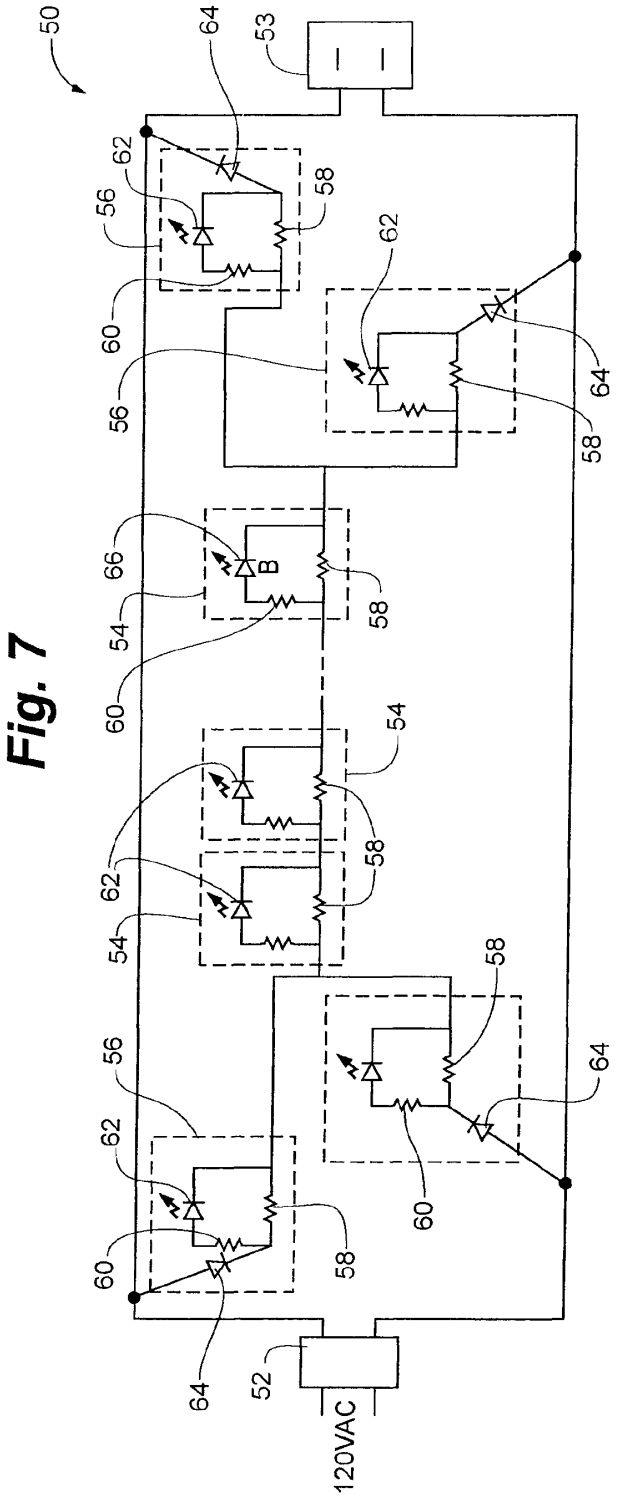

Fig. 7

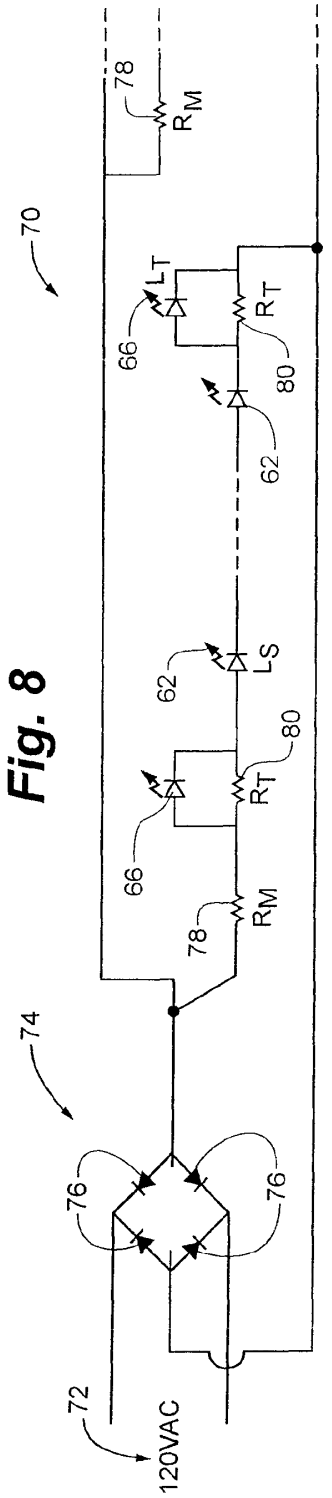

Fig. 8

Fig. 9

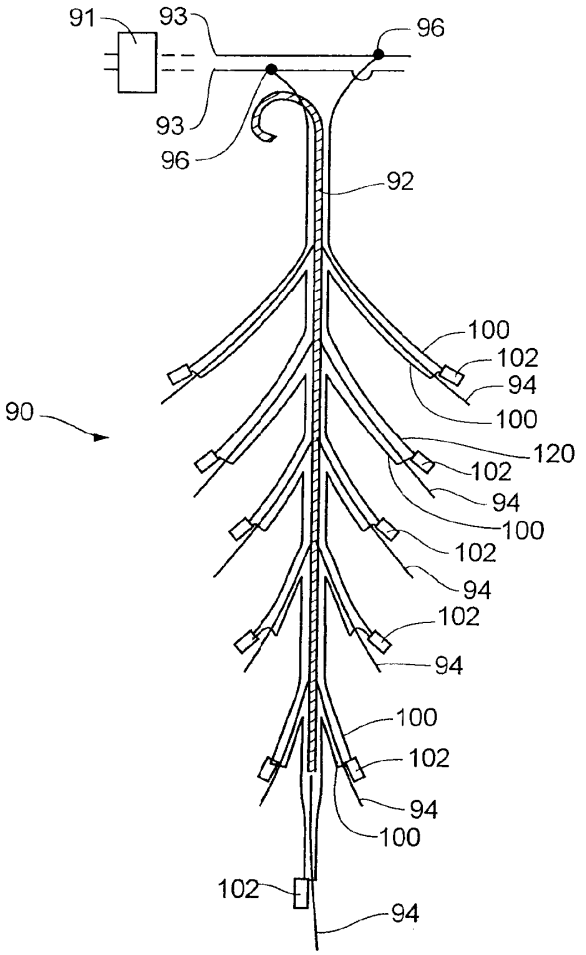
91
93
96
93
96
92
100
102
94
100
90
120
102
94
100
102
94
102
94
100
102
94
100
102
94

Fig. 10

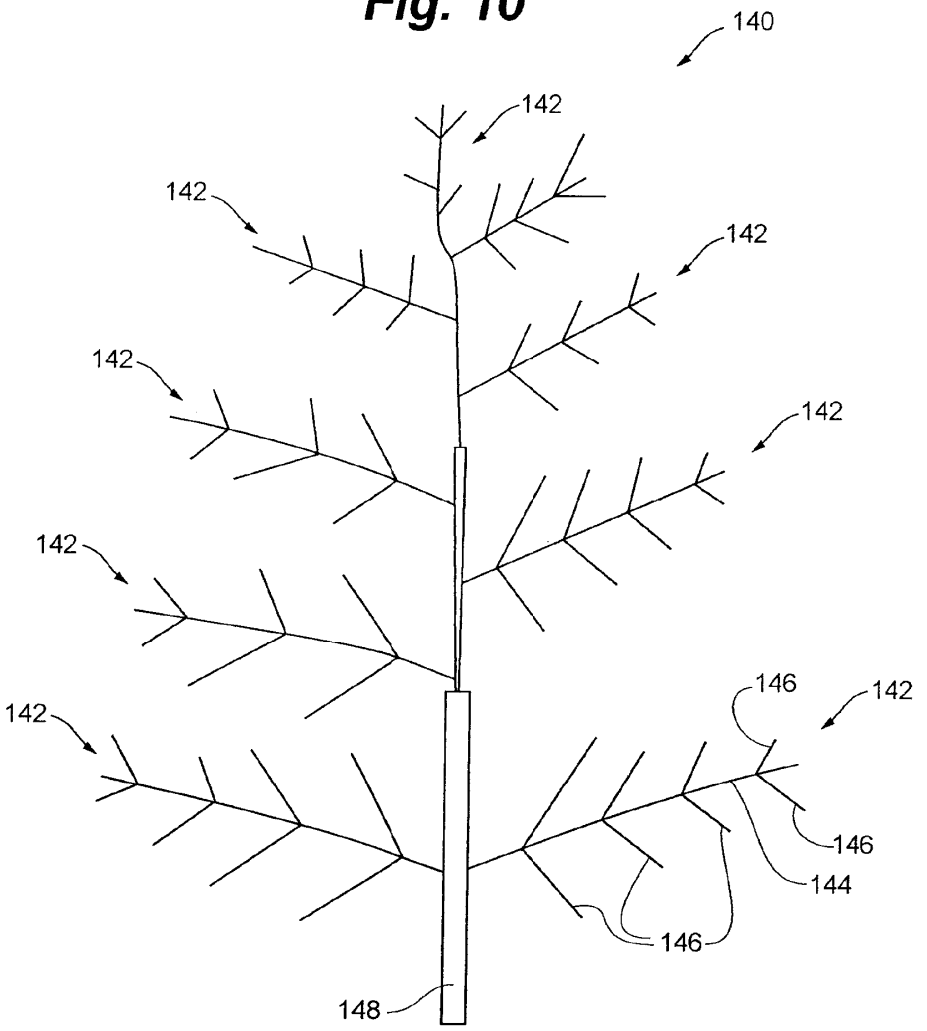

Fig. 11

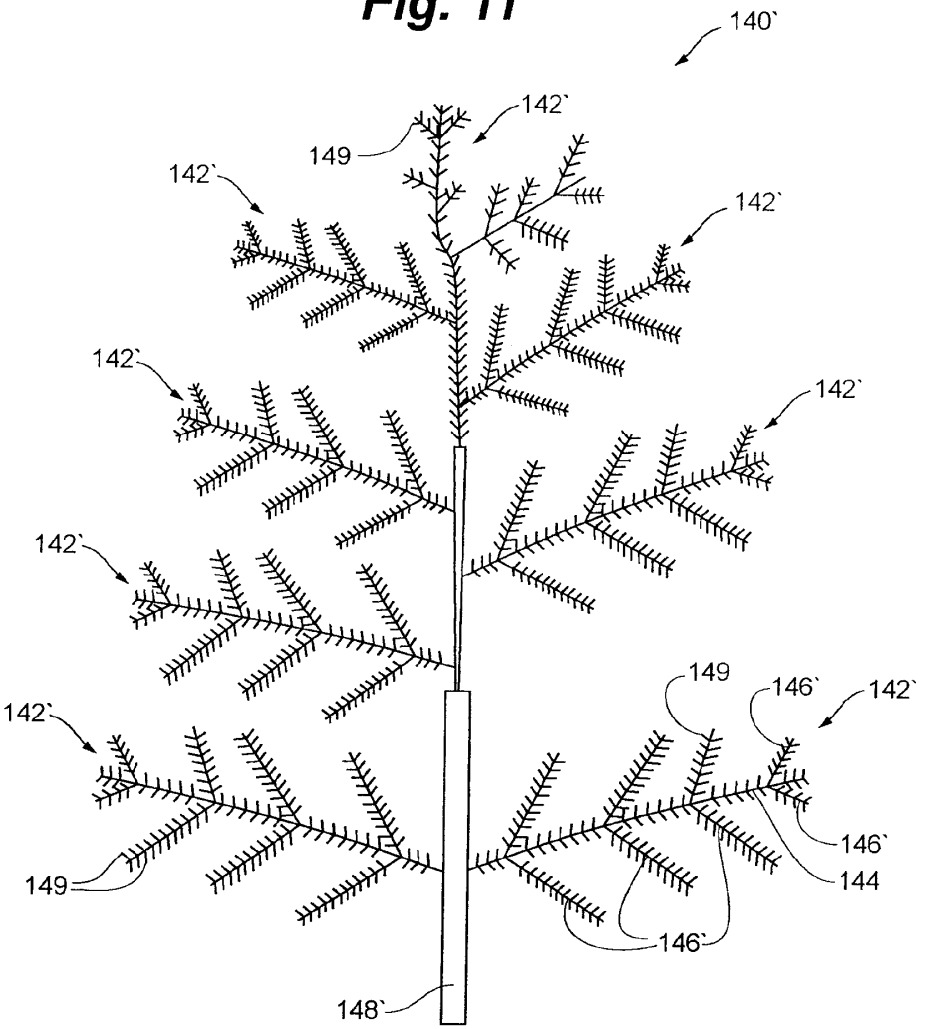
140`
142`
149
142`
142`
142`
142`
142`
142`
142`
149
146`
142`
146`
144
149
146`
148`

Fig. 12

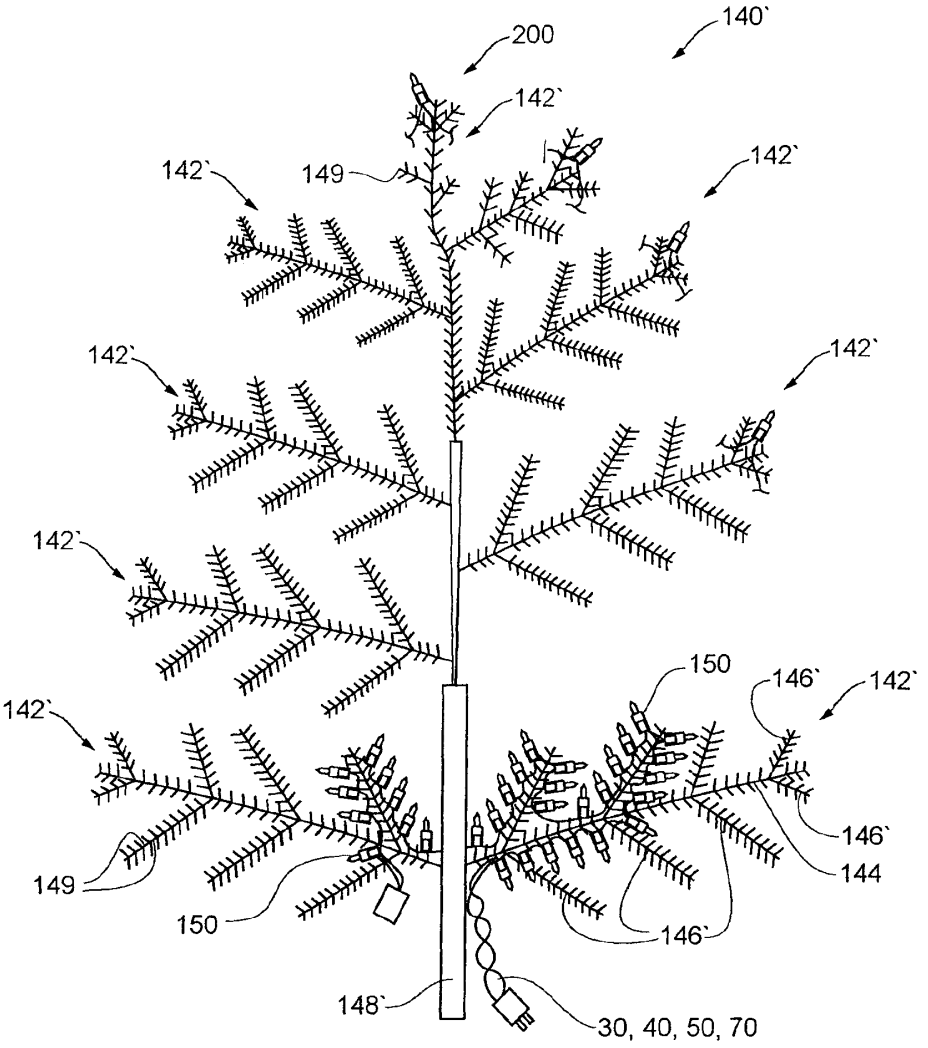
200
140`
142`
142`
149
142`
142`
142`
142`
142`
150
146`
142`
146`
144
149
150
146`
148`
30, 40, 50, 70

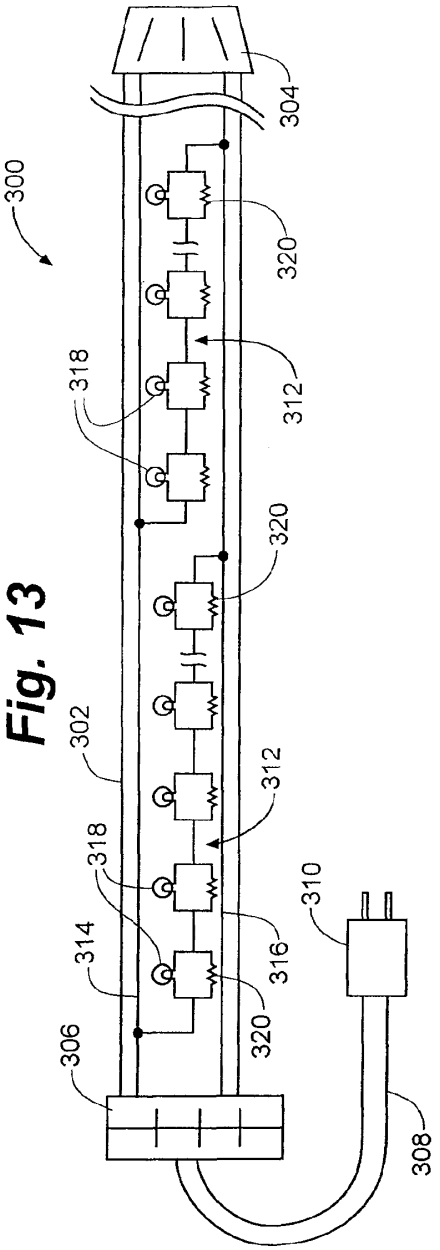
300
302
304
306
308
310
312
314
316
318
320

Fig. 13

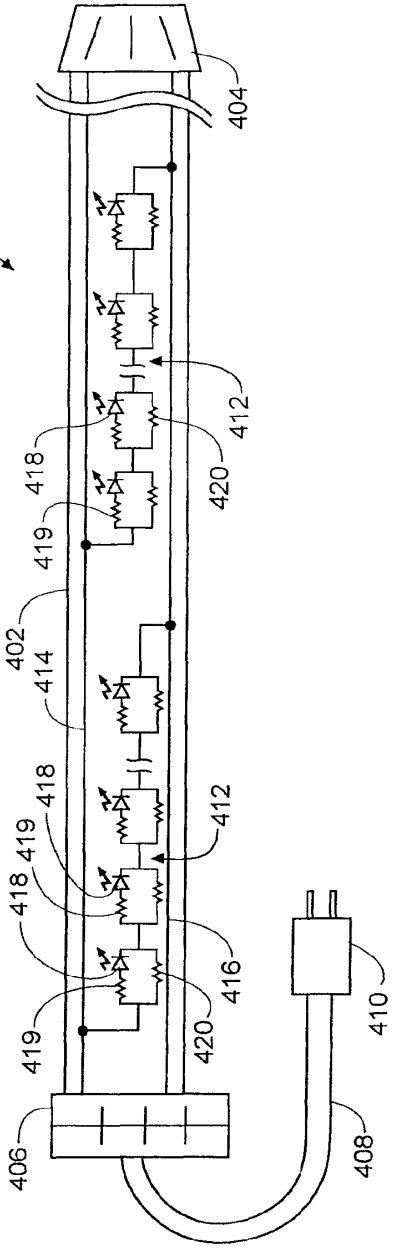
400
402
404
406
408
410
412
414
416
418
419
420

Fig. 14

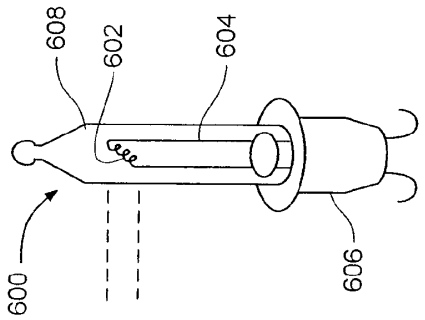

Fig. 17

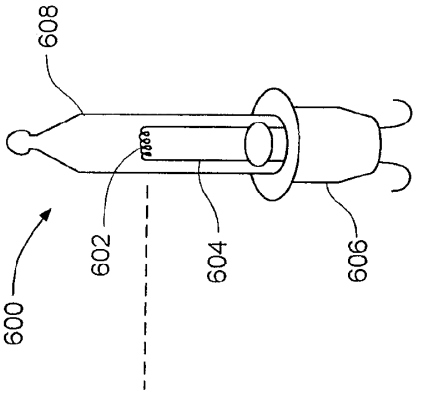

Fig. 16

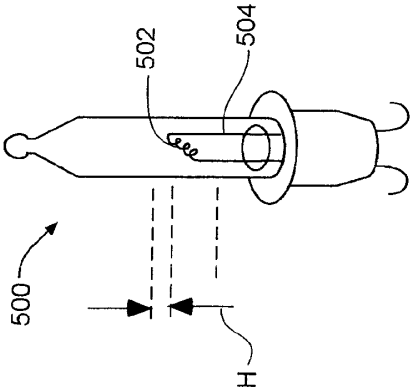

Fig. 15
PRIOR ART

RESISTIVE BYPASS FOR SERIES LIGHTING CIRCUIT

RELATED APPLICATIONS

The present invention claims the benefit of U.S. Provisional Application 60/876,868, filed on Dec. 22, 2006, incorporated herein in its entirety by reference.

TECHNICAL FIELD OF THE INVENTION

The present invention is generally related to an improved light circuit for series circuits or series-parallel circuits utilizing incandescent, LED, or other types of lighting sources, and more particularly, the present invention relates to a resistive bypass element that will continue to conduct electricity and keep the remainder of the series circuit of lights lit even when one or more individual lighting elements are burnt out, defective, broken, have a loose connection or a broken connection in the series circuit, including series parallel circuits.

BACKGROUND OF THE INVENTION

Series connected circuits containing lighting sources are well known especially in lighting strings and flexible lighting (Rope Lights) around the holidays when such light strings are used for decorative purposes. More recently, series connected lighting sources are becoming popular in task lighting, general illumination, automotive lighting, and specialty lighting utilizing LEDs. Generally, the lights in these lighting circuits are electrically in series rather than in parallel. One particular drawback to these types of lighting circuits is that when a lighting source is removed from the circuit, is burnt out, defective, or has a loose connection, the entire lighting circuit is rendered inoperable. Each lighting element within the circuit completes the electrical circuit, so when a light source is removed (for a replaceable type), a connection becomes loose, or the lighting element burns out or other lighting component within the light source, a gap is created in the circuit and electricity is unable to continue to flow through the circuit. When a "good" light source is inserted into the circuit or socket, it completes the circuit, thus allowing electricity to flow uninterrupted.

Specifically, Fisherman, U.S. Pat. No. 2,760,120, discloses a series circuit for a light set with individual incandescent flasher or twinkle bulbs that include a bypass resistor in parallel with the bulb element. The operation of the Fisherman light set is limited to a set with a bulb that flashes on and off, a duty cycle of less than 100%. The on time of the bulb is necessary to control heat generation in the resistor, the resistor conducting during the off time of the bulb, thereby regulating the heat produced in the resistor circuit. The Fisherman device cannot be applied to a set wherein a bulb is burnt out, removed, or loose (and not conducting) to continue to illuminate the remaining bulbs in the circuit. In such situation, the bypass resistor is continually conducting and the temperatures generated on any bypass resistor of practical size (let alone one that fits into a socket) will far exceed ignition temperatures of near by materials used in construction of the set. Further, the Fisherman bulb is a high energy bulb, being 8 volt and ¼ amp, for a power consumption of 2 watts. A more energy efficient bulb is in demand at the present time. Presently, bulbs, such as that depicted generally at **500** in prior art FIG. **15**, are utilized. Such bulbs are a considerable improvement when

compared to the Fisherman bulb, having 0.35-0.425 watt power consumption. There is still a need in the industry for a more energy efficient bulb.

While previous mechanical and electrical circuit configurations have been used in an attempt to address the problems described above, none do so with the reliability, simplicity, low cost of the present invention, and reduced energy consumption. The difficulties and drawbacks of previous lighting series circuit configurations are overcome by the resistive bypass for a series light circuit of the present invention.

SUMMARY OF THE INVENTION

The systems and methods of the invention have several features, no single one of which is solely responsible for its desirable attributes. Without limiting the scope of the invention as expressed by the claims which follow, its more prominent features will now be discussed briefly. After considering this discussion, and particularly after reading the section entitled "Detailed Description of the Drawings" one will understand how the features of the light unit for a light string provide several advantages over traditional series light circuit.

Accordingly, it is an object of the present invention to provide a novel and improved bypass circuit for a series light circuit configuration capable of keeping uninterrupted current flow on condition that a light source of the circuit is removed, becomes loose, fails to conduct, or lighting element or other lighting device of the light source burns out, or becomes defective within the light source.

A further object of the present invention is to provide an incandescent bulb of reduced energy consumption while at the same time maintaining the level of brightness apparent to the human eye as is produced by current higher energy consuming bulbs (the standard bulb having a power consumption of 0.35-0.425 watts). The present invention utilizes bulbs that are less than 0.25 watts and are more preferably 0.20 watts. In order to achieve substantially the same brightness as the standard bulb, the bulb of the present invention uses a higher purity tungsten filament, along with a tighter coil for the filament when rated 0.20 watts. Further, to improve the brightness, the filament is placed higher into the bulb canopy, so that losses from the plastic bulb adaptor at the bottom of the bulb do not absorb as much light. This provides for a measurably brighter bulb, and also provides to the human eye an even apparently brighter bulb, as the filament is higher up into the bulb, something that hasn't been done in the industry to date. Such bulbs can be utilized with a duty cycle of 100% and, when disabled, the conducting bypass resistor in the circuit of the present invention does not achieve dangerous temperature levels due to the reduced current flow. The Fisherman device is necessarily restricted to employment with flasher bulbs, and these must be used in a set where the bulbs are never fully off (disabled) so that the bypass resistor is not continually conducting.

Another object of the present invention is to provide the ability to allow for semiconductor light sources, such as light emitting diodes (LEDs), to provide a twinkling affect, by utilizing LED packages that incorporate integrated circuits (ICs) or other types of electronic circuits that control the flashing rate of the light source, which would only effect the individual lighting element as the resistive bypass would allow current to continue to flow in remaining lighting elements in the series circuit. In another embodiment of the invention, one or more semiconductor light sources, each with a flashing circuit, but without an associated bypass

element in parallel, can be located in the lighting circuit in order to flash all the remaining light sources in the series circuit.

In yet another embodiment of the invention, one or more incandescent light sources, each with a flashing device, but without an associated bypass element in parallel, can be located in the lighting circuit in order to flash all the remaining light sources in the circuit.

Yet another object of the present invention is to provide the ability to allow for semiconductor light sources, such as LEDs, to provide color changing characteristics by utilizing LED packages that incorporate two or more LED chips, and an IC, or other electronic circuit, that controls each LED chip in the LED package independently, while the electronic circuit or IC controls the current and/or voltage to the individual LEDs in the LED package, allowing for the mixing of the LED chip colors to get various resultant colors, which would only affect the individual lighting element as the resistive bypass would allow current to continue to flow in remaining lighting elements in the series circuit. Those skilled in the art would also recognize that a zener diode could be used in parallel to the light source and bypass circuit to help regulate the voltage across the light source.

Further objects and features of the invention will be readily apparent to those skilled in the art from the following specification which includes the appended claims and drawings.

To achieve the above objects and in accordance with the purpose of the invention, as embodied and broadly described herein, one embodiment of a light circuit for a series lighting circuit of the present invention comprises lighting sources connected in series with each other, where each lighting source has a resistive bypass element connected in parallel across it.

The embodiment of this device is to provide a low cost resistive bypass element for series connected light sources. The current movement towards low energy incandescent bulbs, LEDs, and other energy saving light sources allows for a simple resistor to be utilized without creating the heating issues previously faced if such a device was attempted. Now with these low power consuming lighting sources, a resistive bypass element becomes the forefront of products, providing a low-cost bypass circuit. In addition, the use of the resistive bypass element in series connected lighting circuits enables longevity and durability to continue without affect from the failure of any single light source due to defect, or connection issues.

In another embodiment of the present invention, the resistive bypass element may be connected in parallel with more than one light source, where the failure of one bulb would then only affect a limited amount of light sources in the lighting circuit, further saving the cost of bypass resistive elements across each lighting source.

In another embodiment of the present invention, a resistive bypass circuit allows for other types of lighting effects, such as twinkle type products where a semiconductor light source can utilize miniature ICs inside a lighting package, and will only affect that lighting source, allowing the remaining light sources to function independently. Also, more than one light package may have the twinkling effect. For this embodiment, the resistive bypass may only be used across those twinkling effect light sources, as an additional embodiment, or may be used across all lighting sources.

One more embodiment of the resistive bypass circuit is that it also allows for the use of color changing LED packages, that utilize more than one LED chip inside, and may consist of an IC controlled mixing of the LED chips to create other resultant colors, and will only effect that lighting source, allowing the remaining light sources to function independently. Also, more than one light package may have this color changing effect. For this embodiment, the resistive bypass may only be used across those color changing light sources, as an additional embodiment, or may be used across all lighting sources.

The series circuits above with bypass resistors, can also be employed in series—parallel circuits, and be employed in products with or without lampholders, including directly connected to printed circuit boards, as other embodiments of the invention.

The present invention has numerous features and advantages associated therewith.

The bypass circuit of the present invention herein described has an advantage of keeping the remainder of lights within a series lighting circuit lit when a light source is missing from, or becomes loose in, one or more light source sockets or circuits, or becomes defective. This is accomplished by continuing to conduct electricity through the series light circuit even when a light source is broken, loose, poor connection, or defective light source.

The bypass circuit can be utilized in AC or DC circuits powered by batteries, step down transformers, AC utility power, or converters from AC to DC or DC to AC power, pulsed DC, and filtered or unfiltered DC.

As will be realized, the invention is capable of other and different embodiments and its several details are capable of modifications in various respects, all without departing from the invention. Accordingly, the drawing and description are to be regarded as illustrative and not restrictive.

Other objects, advantages and novel features of the present invention will be drawn from the following detailed description of preferred embodiment of the present invention with the attached drawings. The accompanying drawings are included to provide a further understanding of the invention, and are incorporated in and constitute a part of this specification. The drawings illustrate embodiments of the invention and, together with the description, serve to explain the principles of the invention, in which:

BRIEF DESCRIPTION OF THE DRAWINGS

FIG. **1** is a circuit diagram of one embodiment of the present invention where the lighting sources are incandescent bulbs;

FIG. **2** is a circuit diagram of one embodiment of the present invention where the lighting sources include LEDs;

FIGS. **2***a*-**2***c* show various configurations and locations of the current limiting resistor and series and series-parallel configurations of FIG. **2**;

FIG. **2**D shows a circuit diagram of one embodiment using a full wave rectifier with an optional filter capacitor;

FIG. **3** is a diagram of a light string embodiment of the present invention where the lighting sources are incandescent bulbs and the lighting element is a filament;

FIG. **4***a* is a front and side view of a light source assembly where the light source is an incandescent bulb;

FIG. **4***b* is a front and side view of a light source assembly that includes an incandescent light bulb and a resistor;

FIG. **4***c* is a front and side view of a light source assembly that includes an incandescent light bulb, a resistor, and a large-diameter lamp holder;

FIG. **4***d* is a front and side view of a light source assembly showing the brass contacts of the light source assembly and an alternate resistor mounting position;

FIG. **5** is a diagram of a light string embodiment of the present invention where the light sources LEDs and the lighting element is an LED semiconductor chip;

FIG. **6** is a front view of a light source assembly where the light source includes an LED encased in an epoxy lens;

FIG. **7** is a diagram of one embodiment of the present invention that produces a twinkling effect and includes a split construction of a full wave rectifier;

FIG. **8** is diagram of another embodiment of the present invention that produces a twinkling effect and includes traditional full-wave rectification;

FIG. **9** is a front and close-up view of the present invention embodied in a wire tree branch;

FIG. **10** is a front view of a needless artificial tree as used in a lighted green goods system of the present invention;

FIG. **11** is a front view of an artificial tree with needles as used in a lighted green goods system of the present invention;

FIG. **12** is a front view of one embodiment of a lighted green goods system using bypass circuit light strings;

FIG. **13** is a view of a flexible lighting system with a bypass circuit using incandescent light sources;

FIG. **14** is a view of a flexible lighting system with a bypass circuit using LED light sources;

FIG. **15** is an elevational view of a prior art bulb;

FIG. **16** is an elevational view of a bulb of the present invention; and

FIG. **17** is an elevational view of a bulb of a further embodiment of the present invention.

DETAILED DESCRIPTION OF THE DRAWINGS

The resistive bypass circuit **10**, being a set or sting of lights, as shown in FIG. **1** includes a power source **12**, light sources **14**, and bypass resistors **16**. Power source **12** is shown in FIG. **1** is a 120 volt alternating current (AC) power source, power source can be any voltage AC, direct current (DC), AC converted to DC, or DC converted to AC, both filtered or unfiltered DC, and pulsating DC or any other power source that can power the lighting sources. Light sources **14** may include incandescent bulbs, LEDs, or other lighting devices. Light sources **14** of FIG. **1** are incandescent bulbs.

Bypass resistors **16** are configured in parallel with light sources **14**, and combinations of bypass resistors **16** and light sources **14** are configured in series. Light sources **14** and bypass resistors **16** may be packaged together into light source assemblies **18**. When all light sources **14** are operating properly, a portion of the total current flowing through bypass circuit **10** flows through light source **14**, while the remainder flows through bypass resistor **16**.

In the event that a light source **14** ceases to conduct, and current flow is interrupted through that light source **14**, the total current will flow through its corresponding bypass resistor **16**. A missing, broken, or improperly connected light source **14** may cause a light source **14** to fail to conduct. In the case where light source **14** is an incandescent bulb, filament failure, or burnout, may be the cause of a light source failing to conduct. Without bypass resistors **16** operating in parallel with light sources **14**, any failure in a light source **14** would interrupt power to all other light sources **14**. The values of bypass resistors **16** are typically the same, and are chosen such that an appropriate current flows through light sources **14** when all light sources are operating properly.

FIG. **2** illustrates another embodiment of the present invention that uses LEDs as a light source. Resistive bypass circuit **20** includes power source **12**, light sources **26**, optional current limiting resistors **24**, and bypass resistor **28**. Light sources **26**, optional current limiting resistors **24**, and bypass resistors **28** may be packaged together into light source assemblies **22**. In the embodiment shown in FIG. **2**, light source **26** is a single LED, preferably of equal to or less than 0.25 W. In other embodiments, light source **26** may be an LED chip that includes more than one LED. Those skilled-in-the-art will appreciate that the value of current limiting resistors **24** will be chosen based on the type of light source **26**, the number of light sources **26**, the number of bypass resistors **24**, and the number and value of bypass resistors **28**.

In the embodiment shown in FIG. **2**, power source **12** provides power to bypass circuit **20**. When all light sources **26** are operable, current flows through the circuit, with a portion of the total current flows through the path containing current limiting resistor **24** and light source **26**, while the remainder flows through bypass resistor **28**. When current flow is interrupted through a light source **26**, total current flows through the corresponding bypass resistor **28**, allowing the remaining light sources **26** to operate.

Resistive bypass circuits **10** and **20** may be used with any series, or series-parallel connected lighting device where failure of the bulb or its connection will turn off some or all of the bulbs. This includes mini-bulb lighting strings used for Christmas and other holiday decorative lighting, rope lights (also known as flexible lighting) and other general lighting applications that use series connected lamps or LEDs, such as a LED desk lamp, or under-counter light.

Power source **12** is shown in FIG. **2** is a 120 volt alternating current (AC) power source, power source can be any voltage AC, direct current (DC), AC converted to DC, or DC converted to AC, both filtered or unfiltered DC, and pulsating DC, or any other power source that can power the lighting sources.

FIGS. **2***a*-**2***c* show various configurations and locations of the current limiting resistor and series and series-parallel configurations of FIG. **2**. FIGS. **2***a* and **2***b*, show light source assemblies, **22**, that contain only the light source, **26**, and the bypass resistor, **28**, with the current limiting resistor located outside of the light source assembly **22**.

FIG. **2**D shows a circuit diagram utilizing a filtered full wave rectifier, **82** with an optional filter capacitor **84**. The full wave rectifier could be replaced by a single rectifier diode, **76**, to produce ½ wave rectification, and can be optionally filtered by capacitor **84**. If a large enough capacitor **84** is selected, utilizing a single diode, **76**, it could simulate full wave rectification to the circuit.

It was desired to utilize incandescent bulbs with the resistive bypass circuit **10** as shown in FIG. **1**. In order to make the resistor set **10** work with modern, high temperature materials, it was needed to reduce the wattage of the bulbs to at least 0.25 W (standard bulbs in the industry are either the common 0.425 W bulb, or the less common 0.35 W bulb, as noted in prior art FIG. **15**), but it is preferable to use 0.20 Watts. Sets using 0.25 W bulbs are on the edge of passing ANSI/UL standards, a critical condition for placing such sets in the marketplace. The 0.20 W bulbs, on the other hand, more safely allow the set to operate, however, either could be used.

While the 0.25 W bulbs (2.5V, 100 mA) were close in brightness to the 0.425 W bulbs (2.5V, 170 mA) that are commonly used, by using a thinner filament wire or other techniques to compensate for lumen output, the brightness of the 0.25 watt bulb is substantially equal to the standard 0.425 bulb. A conventionally constructed 0.20 W bulb (2.5V,

80 mA) bulb is even dimmer than the 0.35 W bulb (2.5V, 140 mA), and in the holiday market, the market demands bright bulbs.

To make up for the shortcomings of a conventionally constructed 0.20 W bulb, the bulbs of the present invention, noted generally at **600** in FIGS. **16** and **17**, employ a higher purity tungsten filament, along with a tighter coil of the filament **602**. Further, the filament **602** is disposed higher into the bulb canopy **608** by the dimension H, noted in FIG. **15**. The filament **602** is connected by relatively longer leads **604** than the leads **504** of the prior art that support the prior art filament **502**. An advantage of such disposition is that losses from the plastic bulb adaptor **606** at the bottom of the bulb **600** did not absorb as much light. Such disposition of the filament **602** provides for a measurably brighter bulb **600**, and also, as viewed by the human eye, an even brighter bulb **600** is perceived as compared with the prior art construction of FIG. **15**, as the filament **602** is higher up into the bulb canopy **608**, a construction that hasn't been done in the industry.

Further, to enhance the brilliance of the reduced wattage, one version of the low energy bulb **600** of the present invention, the filament **602** is formed of a purer form of tungsten and is of thinner construction as compared to the prior art bulb **500**. Additionally, the filament **602** is wound tighter than the filament **502** of the prior art. However, one skilled in the art would recognize that if brighter bulbs were not desired, standard bulb construction could be utilized.

In addition, as noted with respect to FIG. **2** above, resistor sets **10** may be employed with light sources **26** being LEDs. Such LEDs typically operate at much lower current (20 mA) with a power draw of 0.08 W or less, and therefore allow for very cool operation of the resistor bypass circuit **28**, even when the bypass resistor **28** is continually conducting. In either case, there is substantial energy savings. In another embodiment, higher power LEDs or several LEDs in parallel may be employed across the bypass resistor.

The above noted features allow the resistor bypass circuit **10** to operate as a twinkling set by inserting a flasher bulb into any part of the circuit or, if provided, into a socket socket. Flasher bulbs are bulbs where a bimetallic strip heats, and open circuits the bulb (see for example, Fisherman), where a normal holiday light set that creates a twinkling effect has to use twinkling bulbs, where when the bimetallic strip is heated by the filament, it shorts out the bulb, allowing the remaining bulbs to light. In such sets where the bulbs short, ANSI/UL has very stringent requirements for construction and operation. In contrast however, in the resistor bypass set **10** of the present invention, use of a flasher bulb is not restricted, nor does it pose any additional safety concerns, as when the flasher bulb open circuits, it allows the resistor bypass set to work as it would normally, and actually reduces the current to the remaining bulbs, allowing the remaining bulbs to run cooler, as compared to the twinkle bulb set where it operates hotter when one or more bulbs is in the shorted condition.

The resistor bypass set **10** also has the advantage of being a safer set than the standard mini light sets that commonly use a shunt wire inside the bulb to allow the current to continue flowing, as sets containing shunted bulbs create short circuits across the bulb, further dividing the input voltage by the remaining bulbs, increasing the power drop across each bulb. The increased power drop increases the surface temperature of the bulb, and causing the remaining bulbs in the set to burn out faster. This repeated action causes the bulbs to become very hot, where as the resistor bypass set **10** of the present invention operates such that every bulb failure, places a higher resistance into the set than the bulb it replaces, causing the remaining bulbs to proportionally dim, causing them to increase their life, and to run cooler. However, the resistor could be sized such that the current is not reduced, and may remain relatively constant, or even slightly increase, depending on the effect desired.

FIG. **3** is an embodiment of the present invention in the form of a series-connected decorative light string **30**. Decorative light string **30** includes power plug **32**, optional light source assemblies **34**, incandescent bulbs **36** and bypass resistors **16**. Power plug **32** may directly plug into utility power (120V, 208V, 220V, 240V, 280V, etc), connect to a step down power supply (such as a Class 2 power supply) or may be omitted for direct connection to a power source. As shown in FIG. **3**, incandescent bulbs **36** may be a miniature bulb-type (mini bulb) operating on 2.5 VAC at 70-120 mA, or some other low current draw bulb. Resistors **16** may be in the range of 30 ohms to 60 ohms, though the value of resistors **16** will vary according to the total current flow desired, as well as according to other factors mentioned above. Resistors **16** are configured in parallel with light sources **36**. Light source assemblies **34**, if provided, are configured electrically in series with each other. As indicated earlier, when a light source assembly **36** fails, total system current will flow through the corresponding bypass resistor **16**, allowing the other light sources **36** to remain lit.

In one embodiment of the decorative light string **30** includes one or more light source assemblies **34** that includes a flashing device, but does not include a bypass element **16** in parallel, causing all of the remaining light source assemblies **34** in the series circuit of decorative light string **30** to flash.

Some methods of making light source assemblies **34** are further described in FIGS. **4***a-d*, but the present invention is not limited to the embodiments depicted in the figures. FIG. **4***a* illustrates a light source assembly **34***a* including a light source **36***a* in the form of a mini bulb, and a lamp holder **35***a*. FIG. **4***b* illustrates a light source assembly **34***b* that includes a light source assembly **34***b*, a light source **36***b* in the form of a mini bulb, a bypass resistor **16**, and a lamp holder **35***b*. Lamp holder **35***b* may be larger than lamp holder **35***a* to accommodate bypass resistor **16**. Bypass resistor **16** is connected across light source **36***b* in parallel. The connection may be accomplished by soldering, crimping, friction fit, compression fit, or other means, including connecting to a pair of brass contacts (not shown), to the leads of light source **26***b*, or to other conductors.

FIG. **4***c* illustrates yet another light source assembly, light source assembly **34***c*, which includes a light source assembly **34***c*, a light source **36***c* in the form of a mini bulb, a bypass resistor **16**, and a lamp holder **35***c*. In this embodiment, lamp holder **34***c* is even larger than lamp holder **35***b*.

FIG. **4***d* illustrates another light source assembly, light source assembly **34***d*, which includes a light source assembly **34***d*, a light source **36***d* in the form of a mini bulb, a bypass resistor **16**, and a lamp holder **35***d*. In this embodiment, lamp holder **34***d* may be longer than lamp holder **35***b*. In the embodiment shown in FIG. **4**, one lead of bypass resistor **16** can be crimped to the brass contact. The other lead of bypass resistor **16** may be crimped to a second brass contact **17**, or connected by other means, such that it is electrically in parallel with light source **36***d*. Other means includes being connected to the leads of light source **36**. In addition to crimping, soldering, friction fit, compression, and other common connection means may be employed.

In yet another embodiment, light sources **36** may be mini bulbs filled with an inert gas. Since the use of a bypass

resistor **16** has the potential to decrease current flow through light sources **36**, an inert gas, such as Krypton, can be used in place of a vacuum to allow for the bulb filament to burn whiter and maintaining the same bulb life expected from mini bulbs and get even closer to a standard mini bulb brightness.

Lamp holders **35** of light source assemblies **34** may include molded lamp holders, assembled-on lamp holders, heat-shrink formed lamp holders, and other types of lamp holders. Light sources **36** may be removable, or non-replaceable. In another embodiments, the light source assemblies **34** may by mounted on a rigid or flexible printed circuit board, or connected directly to conductors or wires.

Another embodiment of the present invention is a light string **40** as shown in FIG. **5**. Light string **40** includes an optional power plug **42**, light sources **26**, current-limiting resistors **24**, and bypass resistors **28**. Light sources **26**, current limiting resistors **24**, and bypass resistors **28** may be packaged together into light source assemblies **44**. The embodiment as shown works substantially as described above.

One embodiment of light source **44** is shown in FIG. **6**. Lamp holder base **33** houses bypass resistor **28**, brass contacts **17**, and the ends of wires **45**. Bypass resistor **28** is connected to brass contacts **17** or other contact material to create a parallel configuration. Brass contacts **17** may be crimped on to wires **45** or other conductors. The optional lamp holder adapter **48** attaches to epoxy or some other material lens **46**. The lens **46** encases light source **26**, where light source **26** in this embodiment is an LED.

In another embodiment, the bypass resistor **28**, may be located directly across the LED leads **49** outside of any optional lens material, **46**.

In an alternate embodiment, the bypass resistor **28** may be located within the LED lens material **46** in parallel with the LED, or even inside the glass bulb envelope for incandescent bulbs.

FIG. **7** illustrates another embodiment of the present invention, light string **50**, that utilizes partial rectification and blinking LEDs inside the epoxy lens. Light string **50** includes a power plug **52**, end connect **53**, and light source assemblies **54** and **56**. Light source assemblies **54** are connected in a series configuration. Light source assemblies **56** are connected to the series-connected light sources **54** as shown in FIG. **7**.

Light source assemblies **56** includes a bypass resistor **58**, optional current limiting resistor **60**, light source **62**, which in this embodiment is an LED, and diode **64**. Light source assembly **56** may also includes a lamp holder (not shown), similar to the ones described above.

Light source assemblies **54** includes a bypass resistor **58**, optional current limiting resistor **60**, and light source **62** or light source **66**. In this embodiment, light source **62** is an LED chip, and light source **66** is a "blinking" LED that incorporates a chip that turns the LED on and off for a blinking or flashing effect. Operation of light source **66** is independent of the other light sources **62** due to the bypass resistor **58**. Light source assembly **54** may also includes a lamp holder (not shown), similar to the ones described above. Circuit **50** may utilize more than one blinking LED **66**, per circuit, or may only include blinking LED **66** as its light source.

In this embodiment, diodes **64** provide full-wave rectified power to light source assemblies **54**, causing light sources **62** and **66** of light source assemblies **54** to remain lit throughout most of the AC power cycle. Light source assemblies **56** receive partial rectification due to the particular configuration of FIG. **7**, causing light sources **62** of light source assemblies **56** to be powered throughout approximately half the AC power cycle.

When light source **66** is a blinking LED chip as shown in FIG. **7**, current is periodically interrupted to the LED on the chip. Without bypass resistors **58**, this would cause all light sources in light string **50** to lose power due to an interruption of current flowing through the series-connected circuit. However, bypass resistor **28** allows current to continue flowing, maintaining power to other light sources **62** and **66**. Under normal operation, light source **66** will cause its LED to blink on and off, creating a twinkling effect, while other light sources **62** remain powered and lit. The use of multiple light sources **66** in a light string **50** creates a desirable twinkling effect as light sources **66** turn on and off, while light sources **62** remain lit.

In another embodiment, Light source **66** may be a multi LED chip configuration, programmed to change the light output color of the light source. Alternate embodiments may use a light source **66** where the bypass device **80** is an electronic circuit, or integrated circuit across the LED leads inside or outside of the epoxy housing/lens.

FIG. **8** illustrates another embodiment where, a resistive bypass circuit **70** utilizes full-wave rectification to provide power to all light sources **62** and **66**. Resistive bypass circuit **70** includes an AC power source **72**, full-wave rectifier **74** with optional filter capacitor (not shown), main current limiting resistor **78**, bypass resistors **80**, light sources **66** and **62**. Full-wave rectifier **74** includes four diodes **76**. Full wave rectifier **74** may optionally employ one diode **76**, and a sufficiently sized filter capacitor to simulate full wave rectification. The AC power source **72** may be any source voltage.

In this embodiment, full-wave rectifier **74** provides DC power for bypass circuit **70**. Main current limiting resistor **78** limits the total amount of current flowing through circuit **70** and is sized partially based on the number of light sources **62** and **66**. The use of a single current limiting resistor **78** rather than multiple current limiting resistors simplifies design and manufacturing efforts, but may optionally be manufactured with multiple current limiting resistors as described in the embodiments above. Lights source **66** in the form of blinking LED chips, along with bypass resistors **80** create a twinkling effect when embodied in a light string. The size of bypass resistor **80** depends on the electrical characteristics of light source **66**, but in one embodiment may be 300 to 600 ohms. In some embodiments, bypass resistor **80** may only be used in conjunction with light sources **66**, and not with light sources **60**. This configuration would enable the twinkling effect, but would eliminate the bypass function at light sources **62**.

Another embodiment is the use of circuit **70** in a DC-supplied circuit, such that full wave rectifier **74** is not required. Additional embodiments of circuit **70** are configured in a series-parallel configuration. In another embodiment, light source **66** may be a multi LED chip configuration, programmed to change the light output color of the light source.

FIG. **9** depicts a decorative lighting sculpture **90** that includes an optional power plug **91**, wires **98**, optional connectors **96**, main rod **92**, branches **94**, wires **100** and light source assemblies **102**. Power plug **91** may be connected in one embodiment to a 45 VDC to 50 VDC class 2 transformer with an output of 1.2 A, though other voltage ranges and power sources may be used. Alternatively, light sculpture **90** may not include power plug **91** and may be directly connected a power source. Light source assemblies **102** may be

similar in configuration to the other light source assemblies described above, utilizing incandescent bulbs, LEDs, or other light sources configured in parallel with a bypass resistor.

In alternate embodiments, the bypass resistor may be replaced by bypass circuits utilizing transistors or other electronic active circuits.

The circuits and light strings of the present invention as applied to artificial trees, wreaths, garlands, and other artificial greenery, or alternatively to medium to large decorative products, such as stars, figures, icons and other decorative products provide a number of advantages. Replacing light strings due to light sources that have failed on a light string that is attached to an artificial tree or other decorative product, can be a difficult task since the string is not easily removed from the tree or products and the use of electric testers is not practical due to the fields such products produce with the volumes of wires and optional metal support structures. The bypass circuits and light sets described herein ensure that the light string will continue to remain lit even in the event of a light source failure, meaning that the entire light string does not have to be removed from the tree or decorative product. The combination of circuits, light strings and tree make a reliable, convenient lighted green goods system. FIGS. **10-12** depict some of the artificial trees used in such a lighted green goods system.

FIG. **10** shows one version of an artificial tree **140** that includes a tree trunk **148**, branches **142**, branch mains **144**, and sub-branches **146**. Artificial tree **140** may be constructed of a combination of many materials as described above. In this embodiment, artificial tree **140** is constructed primarily of painted metal, or in another embodiment made primarily of plastic, or a combination of plastic and metal.

FIG. **11** shows another version of an artificial tree, **140'**. Artificial tree **140'** includes tree trunk **148'**, branches **142'**, branch mains **144'**, sub-branches **146'** and needles **149**. Needles **149** are commonly derived from PVC, nylon, and/or PE and may be green in color to make artificial tree **140'** appear to be an evergreen or pine tree. In another embodiment it may use white needles and branches for different aesthetics.

FIG. **12** light string, such as light string **30**, **40**, **50**, **70**, or a combination thereof, attached to branches **142** of tree **140** to form a pre-lit tree system **200**. Light strings **30**, **40**, **50**, **70**, or other embodiments of the present invention, may be similarly attached to trees **140'**. Light string **30**, **40**, **50**, **70** is shown attached to tree **140** via clips **150**. Clip **150** may include but are not limited to C clips, snap lock clips, and wire ties.

FIGS. **13** and **14** depict the present invention in the form of flexible lighting, or rope lighting. Flexible lighting **300** as depicted in FIG. **13** includes an outer encasement **302**, end cap **304**, power cap **306**, power cord **308**, power plug **310**, and one or more bypass circuits **312**. Flexible lighting **300** may operate on 120 VAC, which is transmitted through power plug **310** and power cord **308**, though other voltages may be used, and the input may be rectified or DC. Outer encasement **302** is typically made of a PVC material, and houses bypass circuit **312**. Power cap **306** assists in attaching power cord **308** to bypass circuit **312** and may attach to outer encasement **302** by any number of known methods.

Bypass circuits **312** are series circuits and each bypass circuit **312** is connected in parallel with the other. Bypass circuit **312** includes a plurality of light sources **314** electrically connected in parallel with bypass resistors **320**. Light sources **318** may be incandescent bulbs, LEDs, or other light sources. As described in previous embodiments, bypass resistor **320** may be replaced with another active circuit device. Bypass circuit **312** may also include conductors **314** and **316** which extend the length of flexible lighting **300** and provide power to the bypass circuits **312** when more than one circuit **312** is employed.

Operation of flexible lighting **300** is similar to those embodiments described above. During normal operation, current flows through both light source **318** and bypass resistors **320**. If light source **318** fails, the entire bypass circuit **312** current flows through bypass resistor **320**, allowing flexible lighting **300** to stay lit.

FIG. **14** depicts a similar flexible lighting system that relies on LEDs, rather than incandescent bulbs. Flexible lighting **400** as depicted in FIG. **14** includes an outer encasement **402**, end cap **404**, power cap **406**, power cord **408**, power plug **410**, and one or more bypass circuits **412**. Flexible lighting **400** may operate on 120 VAC, which is transmitted through power plug **410** and power cord **408**, though other voltages may be used, and the input may be rectified or DC. Outer encasement **402** is typically made of a PVC material, and houses bypass circuit **412**. Power cap **406** assists in attaching power cord **408** to bypass circuit **412** and may attach to outer encasement **402** by any number of known methods.

Bypass circuits **412** are series circuits and each bypass circuit **412** is connected in parallel with the other. Bypass circuit **412** includes a plurality of LEDs **414** electrically connected series with resistors **419**. Series connected LEDs **414** and resistors **419** are electrically in parallel with bypass resistors **420**. Light sources **418** may be LEDs, or other light sources. As described in previous embodiments, bypass resistor **420** may be replaced with another active circuit device. Bypass circuit **412** may also include conductors **414** and **416** which extend the length of flexible lighting **400** and provide power to the bypass circuits **412** when more than one circuit **412** is employed. The number or location of resistors **419** in each circuit **421** may vary based on circuit requirements, with some bypass circuits **412** not including a resistor **419**. In other embodiments, resistor **419** may be located external to circuit **421**, and in line with circuit Bypass circuit **412**.

Operation of flexible lighting **400** is similar to those embodiments described above. During normal operation, current flows through both light source **418** and bypass resistors **420**. If light source **418** fails, the entire bypass circuit **412** current flows through bypass resistor **420**, allowing flexible lighting **400** to remain lit.

Other embodiments of flexible lighting **300** and **400** may incorporate twinkling, flashing and color changing properties as previously described above.

It is desired to utilize incandescent bulbs with the embodiment of FIG. **1**. In order to make the resistive bypass set **10** function with modern, high temperature materials, it was needed to reduce the wattage of the bulbs to at least 0.25 W (standard bulbs in the industry are the 0.30 W bulb). It is preferable to use bulbs of 0.20 Watts. Sets using 0.25 W bulbs are on the edge of passing ANSI/UL standards, a critical condition for placing the resistive bypass set **10** in the marketplace. The 0.20 W bulbs, on the other hand, safely allows the set to operate and readily meet ANSI/UL standards, however, either 0.25 W or 0.20 W bulbs could be used.

In addition, the resistor sets with LED sources can also be employed, and as those typically operate at much lower current (20 mA) drawing approximately 0.08 W, those allow for very cool operation of the resistor bypass circuit. Addi-

tional embodiments may use a higher power LED or multiple LEDs connected in parallel across the resistive element.

Both of these lighting changes (lower wattage/higher brightness bulbs, and LEDs) were not anticipated, or contemplated by Fisherman, therefore only restricting it to flasher bulbs, and the use in such a set where the bulbs are never fully off.

In addition, this allows our resistor bypass set to operate as a twinkling set by inserting a flasher bulb into any circuit. Flasher bulbs are bulbs where the bimetallic strip heats, and open circuits the bulb, where a normal holiday light set that creates a twinkling effect has to use twinkling bulbs, where when the bimetallic strip is heated by the filament, it shorts out the bulb, allowing the remaining bulbs to light, however, in such sets where the bulbs short, ANSI/UL does not allow for such constructions in flexible (rope) lighting. However, in the resistor bypass set, use of a flasher bulb is not restricted, nor does it pose any additional safety concerns, as when the flasher bulb open circuits, it allows the resistor bypass set to work as it would normally, and actually reduces the current to the remaining bulbs, allowing to run cooler, vs. the twinkle bulb set where it operates hotter when one or more bulbs is in the shorted condition.

The resistor bypass set also has the advantage providing a shunting circuit, as ANSI/UL standards do not allow for shunts that short circuit the bulb in rope (flexible) lighting, as the bulbs are not replaceable, and shorts caused by shunt wires in or out to the bulb would create an unsafe condition as more and more bulbs burn out. A shunt wire inside the bulb to allow the current to continue flowing, as those bulbs create short circuits, further dividing the input voltage by the remaining bulbs, increasing the power drop across each bulb, thereby increasing the surface temperature of the bulb, and causing the subsequent bulb to burn out faster, and this repeated action causing the bulbs to become very hot, where as the resistor bypass set operates such that every bulb failure, places a higher resistance into the set than the bulb it replaces, causing the remaining bulbs to proportionally dim, causing them to increase their life, and run cooler. However, the resistor could be sized such hat the current is not reduced, and may remain relatively constant.

In addition to decorative lighting, the bypass circuits of the present invention may also be used in general lighting applications including portable lighting, auto lighting, traffic lights and the like.

The invention addresses many of the deficiencies and drawbacks previously identified. The invention may be embodied in other specific forms without departing from the essential attributes thereof; therefore, the illustrated embodiments should be considered in all respects as illustrative and not restrictive. The claims provided herein are to ensure adequacy of the present application for establishing foreign priority and for no other purpose.

What is claimed is:

1. A resistor bypass circuit for a lighting circuit comprising a plurality of serially connected LED light sources and a bypass resistor being connected in parallel with at least one of the respective light sources, said bypass resistor being in circuit and conducting current at all times across the light sources when current is flowing through the circuit regardless of whether the LED light sources are conducting current therethrough.

2. The resistor bypass circuit of claim **1**, where the circuit is series-parallel connected.

3. The resistor bypass circuit of claim **1** wherein at least one of the light sources is a semiconductor providing a twinkling effect, and wherein the semiconductor light source utilizes electronic circuits that control the flashing rate of the light source.

4. The resistor bypass circuit of claim **1**, wherein the LED light source uses 0.20 watts or less.

5. The resistor bypass circuit of claim **1**, at least one of the light sources is a semiconductor light source providing a twinkling effect.

6. The resistor bypass circuit of claim **1**, at least one of the light sources is a semiconductor light source utilizing electronic circuits that control the flashing rate of the light source, which would only affect the individual lighting element as the resistive bypass would allow current to continue to flow in remaining lighting elements in the series circuit.

7. The resistor bypass circuit of claim **1**, wherein said light source is a blinking LED with a first state allowing current to flow through the device and a second state where the light source is an open circuit, whereby remaining light sources in the light string operate with current passing through the bypass resistor when the light source is in the second state.

8. The resistor bypass circuit of claim **1** being utilized in AC or DC circuits powered form a power source selected from the list consisting of batteries, step down transformers, AC utility power, or converters from AC to DC or DC to AC power, pulsed DC, and filtered or unfiltered DC, or partially filtered AC.

9. A resistor bypass circuit for a series lighting circuit comprising a plurality of serially connected LED light sources and a bypass resistor being connected in parallel with at least one of the respective light sources, said bypass resistor being in circuit and conducting current at all times when current is flowing through the circuit regardless of whether the LED light sources are conducting current therethrough and further including an LED flashing light source which includes a flashing circuit which causes the entire light circuit to flash.

10. A resistor bypass circuit for a lighting circuit comprising a plurality of serially connected LED light sources and a bypass resistor being connected in parallel with at least one of the respective light sources, said bypass resistor connected across the at least one light sources and being in circuit and conducting current at all times when current is flowing through the circuit regardless of whether the LED light sources are conducting current therethrough and wherein the resistance of the bypass resistor is equal to or greater than the inherent resistance of the light source to which the resistor is attached.

11. The resistor bypass circuit of claim **10**, the light source being a semiconductor light source for providing color changing characteristics.

12. The resistor bypass circuit of claim **10**, the semiconductor light source utilizing LED packages that incorporate two or more LED chips, and an integrated circuit (IC), the integrated circuit controlling each LED chip in respective LED packages independently.

13. The resistor bypass circuit of claim **12**, the IC controlling the current and/or voltage to the individual LED chips in the LED package, the control providing for the mixing of the LED chip colors to get various resultant colors.

14. The resistor bypass circuit of claim **13**, the control only affecting individual lighting element, the bypass resistor providing for current continuing to flow in remaining lighting elements in the series circuit.

15. A method of bypassing an LED light source, having a predetermined resistance to current flow, in a serially con-

nected LED light string having at least one light source, the method comprising the steps of

a. selecting a bypass resistor with the following characteristics:

i. a resistance greater than or equal to the predetermined resistance of said LED light source;

ii. the ability to carry all of the current in the light string; and

iii. the ability to operate at 100% duty cycle;

b. inserting said bypass resistor in parallel with said at least one LED light source.

* * * * *

EXHIBIT E

LEDup "7.5 ft. & 9 ft. Starry Light Tree" compared to US 9,554,437 claims 1-7 and 10-11

Claim	LEDup 7.5 ft. & 9 ft. Starry Light Trees
1. A system for switchably changing the function of a special function bulb controller to switch an illumination element between having visual appearance of steady-on and a visual appearance of a predetermined special visual function, comprising:	The LEDup "7.5 ft. Starry Light Fraser Fir Flocked LED Pre Lit Artificial Christmas Tree with 1500 Color Changing Lights" ("7.5 ft. Starry Light Tree") product contains "1500 Color Changing Lights." The LEDup "9 ft Starry Light Flocked Christmas Tree" ("9 ft Starry Light Tree") product contains "3000 remote-operated LEDs." See images below of products. 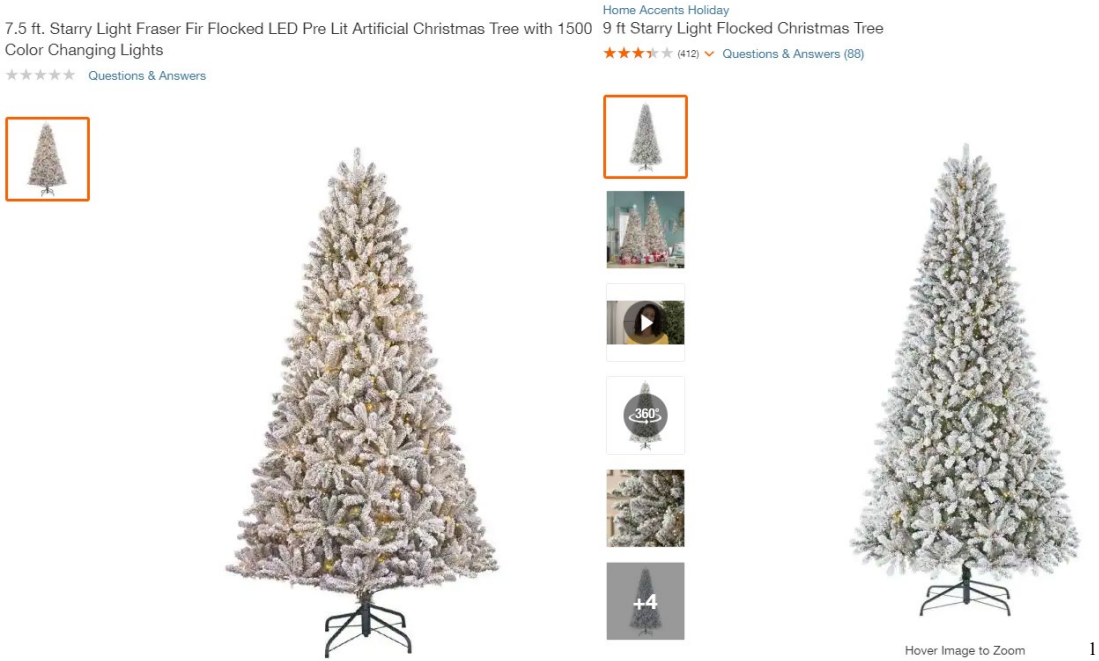 [1] Some of the LED lights on the products are special illumination LEDs that have a predetermined on/off twinkling effect. The products have a mode selector connected to a circuit board that allows users to change between "Steady On" or "Twinkling Effect" modes for the special illumination LEDs. See image below.

[1] As seen at https://www.homedepot.com/p/Home-Accents-Holiday-7-5-ft-Starry-Light-Fraser-Fir-Flocked-LED-Pre-Lit-Artificial-Christmas-Tree-with-1500-Color-Changing-Lights-016017552052185/320110693, and https://www.homedepot.com/p/Home-Accents-Holiday-9-ft-Starry-Light-Flocked-Christmas-Tree-21LE31009/316122908, accessed August 10, 2022

LEDup "7.5 ft. & 9 ft. Starry Light Tree" compared to US 9,554,437 claims 1-7 and 10-11

Claim	LEDup 7.5 ft. & 9 ft. Starry Light Trees
	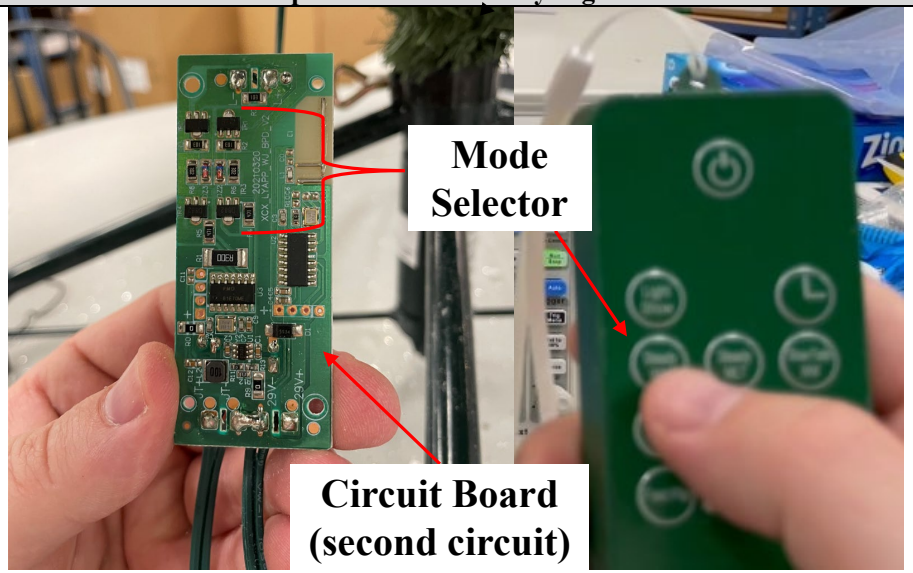 LEDup makes, offers for sale, sells, and imports the claimed system and induce others including Home Depot to offer for sale, sell and use the same.
a. an electrically powered illumination element;	The 7.5 ft. Starry Light Tree product contains "1500 Color Changing Lights" powered by electricity. The 9 ft Starry Light Tree product contains "3000 remote-operated LEDs" powered by electricity. Some of the LED lights are special illumination LEDs that produce an on/off twinkling effect possibly in combination with steady on LEDs. Each special illumination LED has an integrated circuit (IC) in it. Other LEDs on the product are standard non switching LED bulbs, similar to the description in the patents. See '437 patent 4:17-20. The standard non-switching LEDs (if provided) do not have an IC in them.

LEDup "7.5 ft. & 9 ft. Starry Light Tree" compared to US 9,554,437 claims 1-7 and 10-11

Claim	LEDup 7.5 ft. & 9 ft. Starry Light Trees
b. a first switching circuit in communication said illumination element for controlling the flow of current to the element, said first circuit containing a controller for controlling the power to said illumination element to produce a predetermined special illumination visual lighting effect in the illumination element, said first circuit initiating said lighting effect when powered up starting from an initial steady-on illuminated state in the element and then proceeding to other special lighting effects occurring after the steady-on power up and periodically repeating said special lighting effect for a predetermined period of time, and	Each special illumination LED has an integrated circuit (IC) that constitutes a "first switching circuit." The IC is integrated into each LED unit, similar to the description in the patent. See '437 patent 4:3-11. The IC controls power to the special illumination LED producing a predetermined visual lighting effect that appears as follows: when the IC is initially powered up, the LED begins with a steady-on illumination, followed by a twinkling (blinking) state for a period, before restarting the cycle by returning to the steady-on illumination and repeating the steady-on-to-twinkling cycle for as long as power is maintained continuously. See images below of LED blinking "on" and "off" while power is maintained continuously, as shown by the oscilloscope measurement. 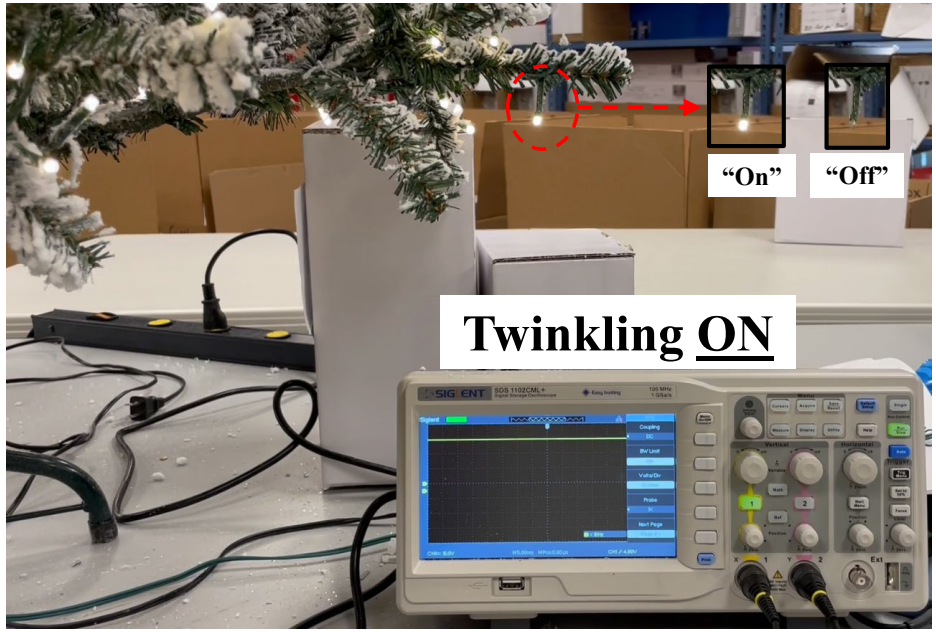 So long as power is maintained continuously to the LED IC, without interruption, the LED produces a continuous twinkling (blinking on and off) visual effect.
c. a second switching circuit in communication with said first circuit, configured to periodically interrupt the flow of current to said first circuit, at an	The 7.5 ft. Starry Light Tree and 9 ft. Starry Light Tree products have a circuit board containing an IC that includes a function which constitutes a "second switching circuit." The IC on the circuit, which performs multiple functions when appropriately activated, is in communication with and controls the flow of current to the ICs in the special illuminating LEDs (first circuits). See below.

LEDup "7.5 ft. & 9 ft. Starry Light Tree" compared to US 9,554,437 claims 1-7 and 10-11

Claim	LEDup 7.5 ft. & 9 ft. Starry Light Trees
interruption frequency sufficient to cause the second circuit to reset to its steady on state without proceeding to said other special lighting effects, and thereby producing a plurality of steady-on illumination pulses in the illumination element.	**circuit board (second circuit) containing IC controlling current to special illuminating LEDs and standard LEDs** 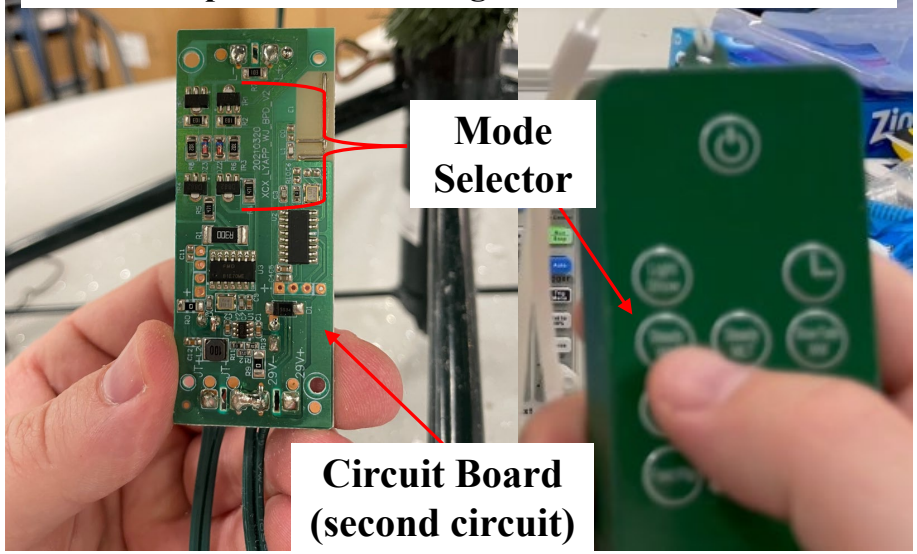 The 7.5 ft. Starry Light Tree and 9 ft. Starry Light Tree products contain a mode selector connected to a circuit board that allows users to change between "Steady On" or "Twinkling Effect" modes for the special illumination LEDs. When a user selects the "Steady On" mode, the IC on the circuit board interrupts current to the IC in the special illumination LED (first switching circuit). The interruption in power causes the IC on the special illumination LED to reset the steady-on-to-twinkling cycle and return to a "Steady On" state. When a user selects a "Steady On" mode, the IC on the circuit board (second circuit) produces a series (a plurality) of pulses to the IC (first circuit) on the special illuminating LEDs sufficient to keep the LEDs in a "Steady On" state, and not proceeding to the "Twinkling Effect" state in the steady-on-to-twinkling cycle. See image below showing frequency interruption pulses from the LED on the circuit board creating a "Steady On" visual effect. When a user selects "Twinkling Effect" mode the IC (second circuit) allows uninterrupted (non-pulsing) DC to flow to allow the IC (first circuit) in the special illumination LED to operate normally and create and on/off repetitive function causing the lights to produce a "twinkling effect." See item b above.

LEDup "7.5 ft. & 9 ft. Starry Light Tree" compared to US 9,554,437 claims 1-7 and 10-11

Claim	LEDup 7.5 ft. & 9 ft. Starry Light Trees
	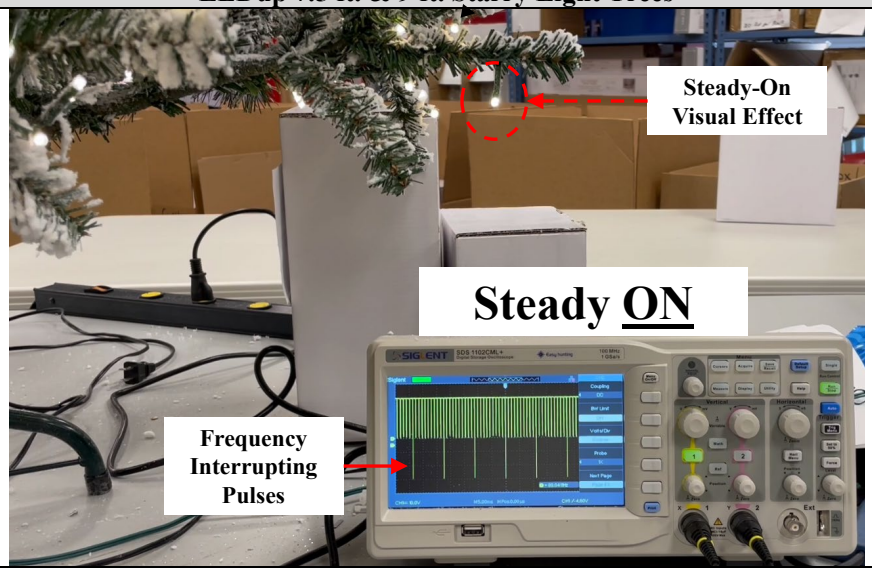
2. The system of claim 1 wherein said interruption frequency is at least sufficient to create the visual appearance in the illumination element of a steady-on light.	When a user selects "Steady On" mode, the IC on the circuit board produces a series (a plurality) of illuminating pulses sufficient to keep the LEDs in a "Steady On" state, and creating the visual appearance of an uninterrupted "Steady On" light.
3. The system of claim 2 wherein said interruption frequency is at least sufficient to provide a plurality of light pulses from the illumination element which appear to have substantially uniform intensity.	The light emitting from the special illuminating LEDs appear to have substantially uniform intensity in the "Steady On" state.
4. The system of claim 2 wherein said interruption frequency is at least more than the frequency of a human eye to observe flicker in the illumination element.	The light emitting from the special illuminating LEDs appear to have substantially uniform intensity in the "Steady On" state to a human observer.

LEDup "7.5 ft. & 9 ft. Starry Light Tree" compared to US 9,554,437 claims 1-7 and 10-11

Claim	LEDup 7.5 ft. & 9 ft. Starry Light Trees
5. The system of claim 2 wherein said interruption frequency includes periodically energizing and reenergizing the second circuit to at least sufficiently to create the visual appearance in the illumination element of a steady-on illumination.	The light emitting from the special illuminating LEDs appear to have the appearance of "Steady On" illumination.
6. The system of claim 2 wherein said special visual function is a twinkle light effect.	When the special illumination ICs in the LEDs are initially powered up, the LED begins with a steady-on illumination, followed by a twinkling (blinking) state for a period, before restarting the cycle by returning to the steady-on illumination and repeating the steady-on-to-twinkling cycle for as long as power is maintained continuously. See images below of LED blinking "on" and "off" while power is maintained continuously. 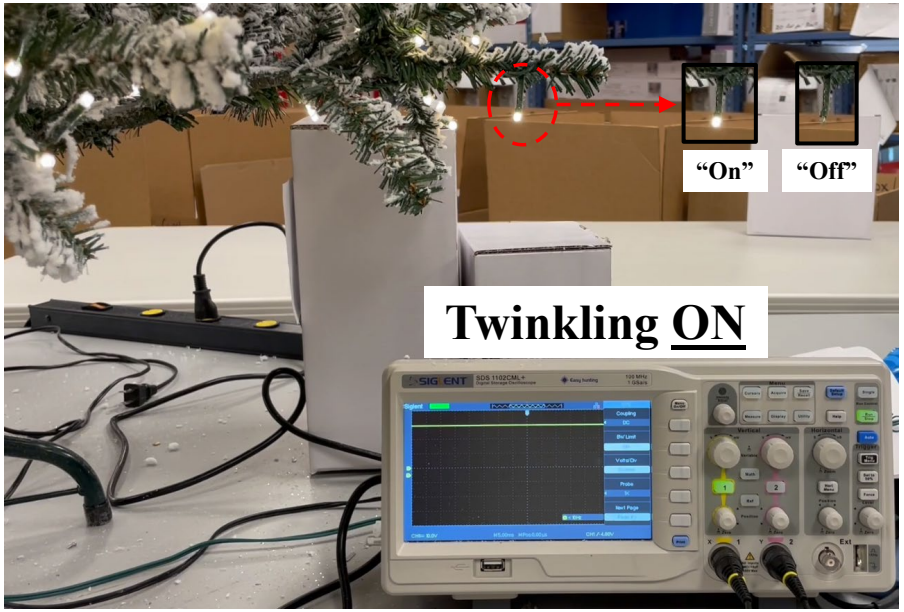

LEDup "7.5 ft. & 9 ft. Starry Light Tree" compared to US 9,554,437 claims 1-7 and 10-11

Claim	LEDup 7.5 ft. & 9 ft. Starry Light Trees
7. The system of claim 2 wherein said special visual function is a blinking light effect.	When the special illumination ICs in the LEDs are initially powered up, the LED begins in a steady-on illumination, followed by a twinkling (blinking) state for a period, before restarting the cycle by returning to the steady-on illumination and repeating the steady-on-to-twinkling cycle creating a twinkling effect for as long as power is maintained continuously. See images below of LED blinking "on" and "off" while power is maintained continuously. 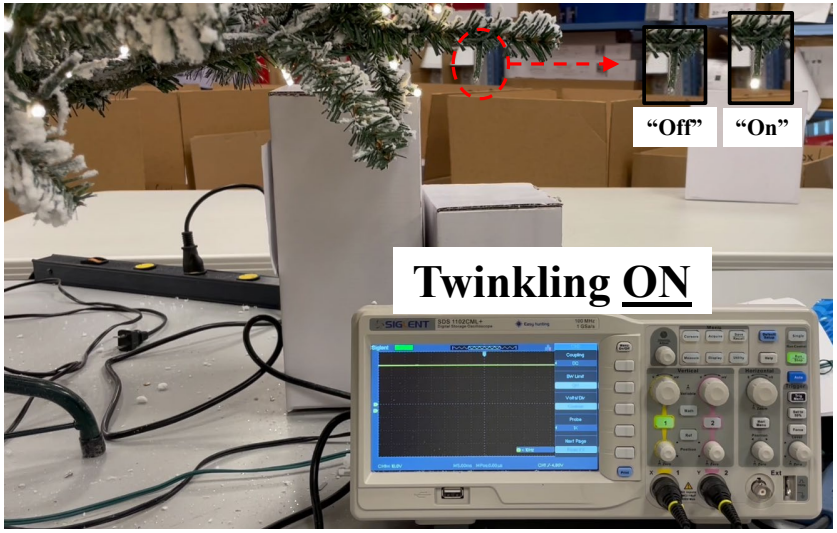
10. The system of claim 2 wherein steady-on includes a momentary illumination at a substantially uniform light output.	The "steady on" state appears as steady on illumination, even though the power to the LED is pulsed (at a frequency fast enough for human observation to see it as steady on).
11. A method of switchably changing the function of a special function bulb controller to switch an illumination element between having visual appearance of steady-on and a visual appearance of a predetermined special visual function, comprising the steps of:	The LEDup 7.5 ft. Starry Light Tree product contains "1500 Color Changing Lights." The LEDup 9 ft Starry Light Tree product contains "3000 remote-operated LEDs." See image below of product.

LEDup "7.5 ft. & 9 ft. Starry Light Tree" compared to US 9,554,437 claims 1-7 and 10-11

Claim	LEDup 7.5 ft. & 9 ft. Starry Light Trees
	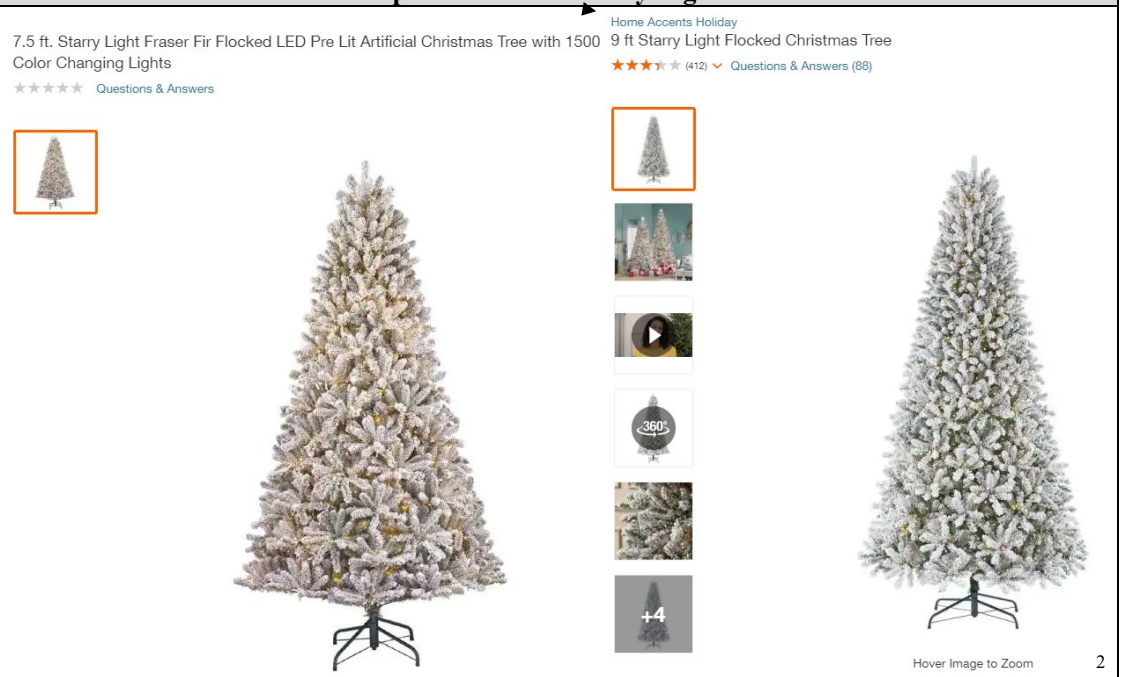 2 Some of the LED lights on the product are special illumination LEDs that have a predetermined on/off twinkling effect. The product has mode selector connected to a circuit board that allows users to change between "Steady On" or "Twinkling Effect" modes for the special illumination LEDs. See image below.

[2] As seen at https://www.homedepot.com/p/Home-Accents-Holiday-7-5-ft-Starry-Light-Fraser-Fir-Flocked-LED-Pre-Lit-Artificial-Christmas-Tree-with-1500-Color-Changing-Lights-016017552052185/320110693, and https://www.homedepot.com/p/Home-Accents-Holiday-9-ft-Starry-Light-Flocked-Christmas-Tree-21LE31009/316122908, accessed August 10, 2022

LEDup "7.5 ft. & 9 ft. Starry Light Tree" compared to US 9,554,437 claims 1-7 and 10-11

Claim	LEDup 7.5 ft. & 9 ft. Starry Light Trees
	circuit board (second circuit) containing IC controlling current to special illuminating LEDs and standard LEDs 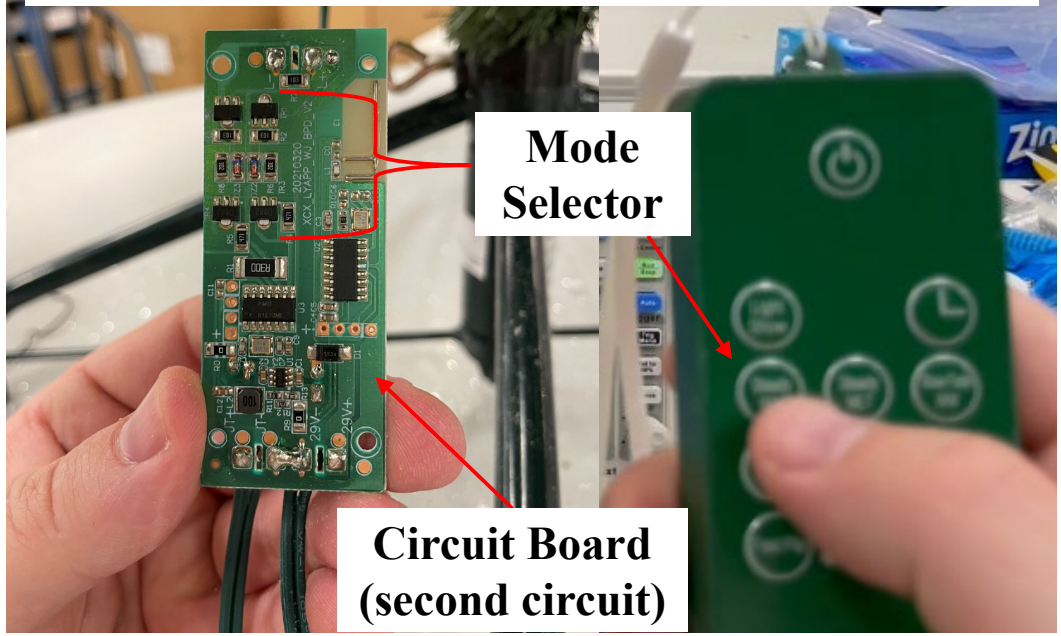 LEDup induces others to practice the claimed method.
a. electrically powering illumination element;	The 7.5 ft. Starry Light Tree product contains "1500 Color Changing Lights" powered by electricity. The 9 ft Starry Light Tree product contains "3000 remote-operated LEDs" powered by electricity. Some of the LED lights are special illumination LEDs that use an on/off twinkling effect which can be in combination with steady on LEDs. Each special illumination LED has an integrated circuit (IC) in it (first circuit). Other LEDs on the product can be standard non switching LED bulbs, similar to the description in the patents. See '437 patent 4:17-20. The standard non switching LEDs do not have an IC in them.

LEDup "7.5 ft. & 9 ft. Starry Light Tree" compared to US 9,554,437 claims 1-7 and 10-11

Claim	LEDup 7.5 ft. & 9 ft. Starry Light Trees
b. in communication with said illumination element, controlling the flow of current to the element to produce a predetermined special illumination visual lighting effect in the illumination element, controlling said element so that when it is powered up starting with an initial steady on illuminated state in the element and then proceed to said special lighting effects occurring after the steady-on power up and periodically repeating said special lighting effect for a predetermined period of time, and	Each special illumination LED has an IC (integrated circuit). The IC (first circuit) is integrated into each LED unit, similar to the description in the patent. See '437 patent 4:3-11. The IC (first circuit) controls power to the special illumination LED producing a predetermined visual lighting effect that appears as follows: When the IC is initially powered up, the LED begins with a steady-on illumination, followed by a twinkling (blinking) state for a period, before restarting the cycle by returning to the steady-on illumination and repeating the steady-on-to-twinkling cycle for as long as power is maintained continuously. See images below of LED blinking "on" and "off" while power is maintained continuously, as shown by the oscilloscope measurement. 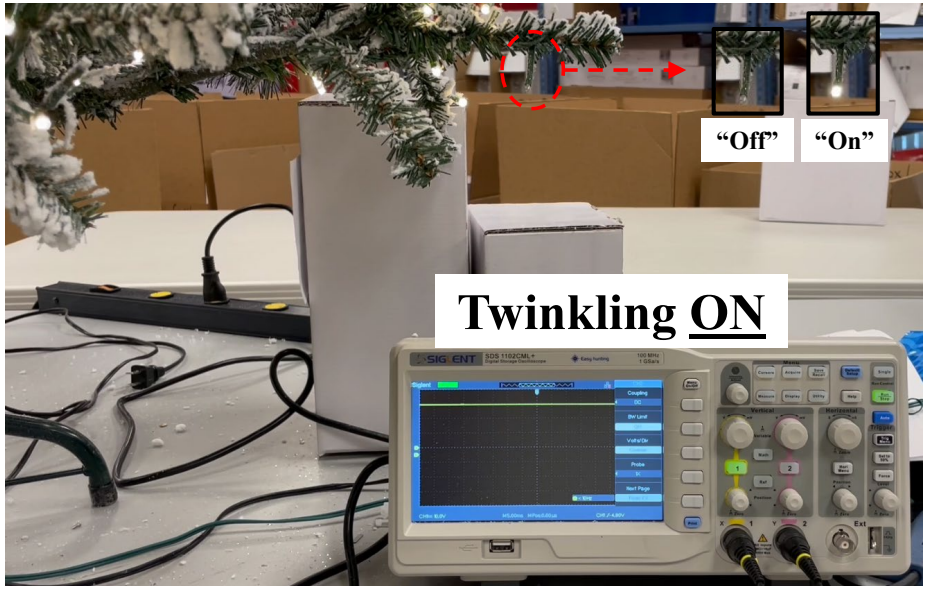 So long as power is maintained constant continuously to the LED IC (first circuit), without interruption, the special illumination LED produces a continuous twinkling (blinking on and off) visual effect.
c. periodically interrupt the flow of current to said illumination element, at an interruption frequency sufficient to cause the steady-on state without proceeding to said special lighting effects, and thereby	The 7.5 Ft Pre-Lit Kenwood product has a circuit board containing an IC (second circuit). The IC on the second circuit is in communication with and controls the flow of current to the ICs in the special illuminating LEDs (first circuits). See image below.

LEDup "7.5 ft. & 9 ft. Starry Light Tree" compared to US 9,554,437 claims 1-7 and 10-11

Claim	LEDup 7.5 ft. & 9 ft. Starry Light Trees
producing a plurality of steady-on illumination pulses in the illumination element.	**circuit board (second circuit) containing IC controlling current to special illuminating LEDs and standard LEDs** 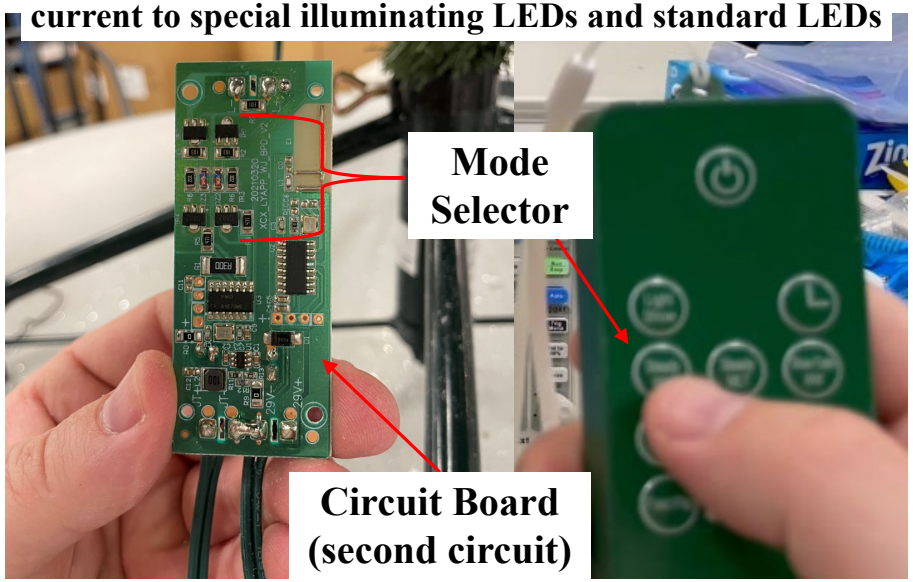 The 7.5 ft. Starry Light Tree and 9 ft. Starry Light Tree products contain a mode selector connected to a circuit board (second circuit) that allows users to change between "Steady On" or "Twinkling Effect" modes for the special illumination LEDs. When a user selects the "Steady On" mode, the IC on the circuit board interrupts current to the IC in the special illumination LED (first switching circuit). The interruption in power causes the IC (first circuit) on the special illumination LED to reset the steady-on-to-twinkling cycle and return to a "Steady On" state. When a user selects a "Steady On" mode, the IC on the circuit board (second circuit) produces a series (a plurality) of steady on illuminating pulses to the IC on the special illuminating LEDs sufficient to keep the LEDs in a "Steady On" state, and not proceeding to the "Twinkling effect" state in the steady-on-to-twinkling cycle. See image blow showing frequency interruption pulses from the LED on the circuit board creating a "Steady On" visual effect. When a user selects "Twinkling Effect" mode the IC (second circuit) allows uninterrupted (non-pulsing) DC to flow to allow the IC (first circuit) in the special illumination LED to operate normally and create and on/off repetitive function causing the lights to create a "twinkling effect", see item b above.

EXHIBIT F

LEDup "Grand Duchess" compared to US 9,554,437 claims 1-7 and 10-11

Claim	LEDup Grand Duchess
1. A system for switchably changing the function of a special function bulb controller to switch an illumination element between having visual appearance of steady-on and a visual appearance of a predetermined special visual function, comprising:	The LEDup "7.5 ft Grand Duchess Balsam Fir Christmas Tree" ("Grand Duchess Balsam Fir") product contains "2,250 color-changing LEDs." See image below of the product. [1] Some of the LED lights on the product are special illumination LEDs that have a predetermined on/off twinkling effect. The product has a mode selector connected to a circuit board that allows users to change between "Steady On" or "Twinkling Effect" modes for the special illumination LEDs. See image below.

[1] As seen at https://www.homedepot.com/p/Home-Accents-Holiday-7-5-ft-Grand-Duchess-Balsam-Fir-Christmas-Tree-21LE31007/320110680, and, accessed August 15, 2022.

LEDup "Grand Duchess" compared to US 9,554,437 claims 1-7 and 10-11

Claim	LEDup Grand Duchess
	Circuit Board (second circuit) & Mode Selector **circuit board (second circuit) containing IC controlling current to special illuminating LEDs and standard LEDs** 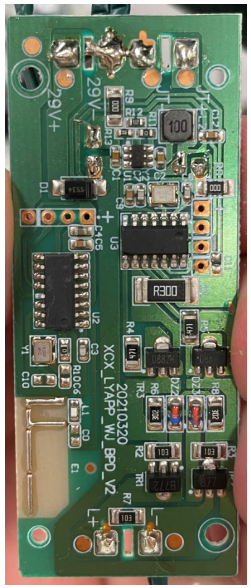 **Mode Selector** LEDup makes, offers for sale, sells, and imports the claimed system and induce others including Home Depot to offer for sale, sell and use the same.
a. an electrically powered illumination element;	The Grand Duchess Balsam Fir product contains "2,250 color-changing LEDs" powered by electricity. Some of the LED lights are special illumination LEDs that produce an on/off twinkling effect possibly in combination with steady on LEDs. Each special illumination LED has an integrated circuit (IC) in it. Other LEDs on the product are standard non switching LED bulbs, similar to the description in the patents. See '437 patent 4:17-20. The standard non switching LEDs (if provided) do not have an IC in them.

LEDup "Grand Duchess" compared to US 9,554,437 claims 1-7 and 10-11

Claim	LEDup Grand Duchess
b. a first switching circuit in communication said illumination element for controlling the flow of current to the element, said first circuit containing a controller for controlling the power to said illumination element to produce a predetermined special illumination visual lighting effect in the illumination element, said first circuit initiating said lighting effect when powered up starting from an initial steady-on illuminated state in the element and then proceeding to other special lighting effects occurring after the steady-on power up and periodically repeating said special lighting effect for a predetermined period of time, and	Each special illumination LED has an integrated circuit (IC) that constitutes a "first switching circuit." The IC is integrated into each LED unit, similar to the description in the patent. See '437 patent 4:3-11. The IC controls power to the special illumination LED producing a predetermined visual lighting effect that appears as follows: when the IC is initially powered up, the LED begins with a steady-on illumination, followed by a twinkling (blinking) state for a period, before restarting the cycle by returning to the steady-on illumination and repeating the steady-on-to-twinkling cycle for as long as power is maintained continuously. See images below of LED blinking "on" and "off" while power is maintained continuously, as shown by the oscilloscope measurement. 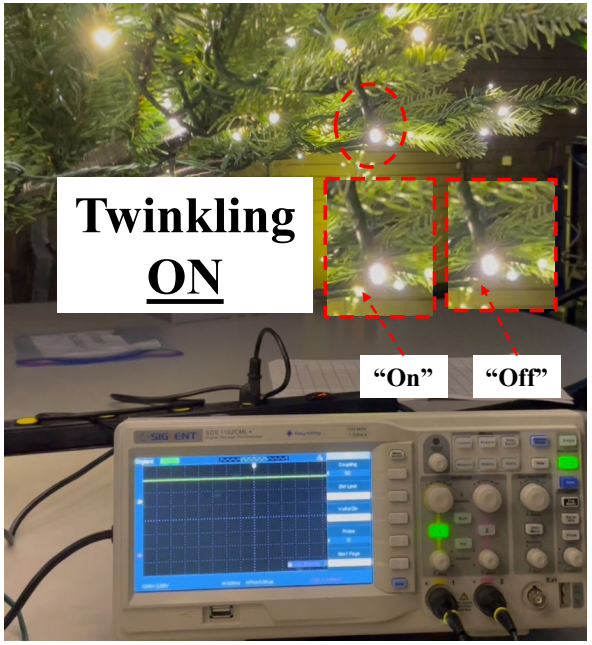 So long as power is maintained continuously to the LED IC, without interruption, the LED produces a continuous twinkling (blinking on and off) visual effect.
c. a second switching circuit in communication with said first circuit, configured to periodically interrupt the flow of current to said first circuit, at an interruption	The Grand Duchess Balsam Fir product has a circuit board containing an IC that includes a function which constitutes a "second switching circuit." The IC on the circuit, which performs multiple functions when appropriately activated, is in communication with and controls the flow of current to the ICs in the special illuminating LEDs (first circuits). See below.

LEDup "Grand Duchess" compared to US 9,554,437 claims 1-7 and 10-11

Claim	LEDup Grand Duchess
frequency sufficient to cause the second circuit to reset to its steady on state without proceeding to said other special lighting effects, and thereby producing a plurality of steady-on illumination pulses in the illumination element.	**Circuit Board (second circuit) & Mode Selector** 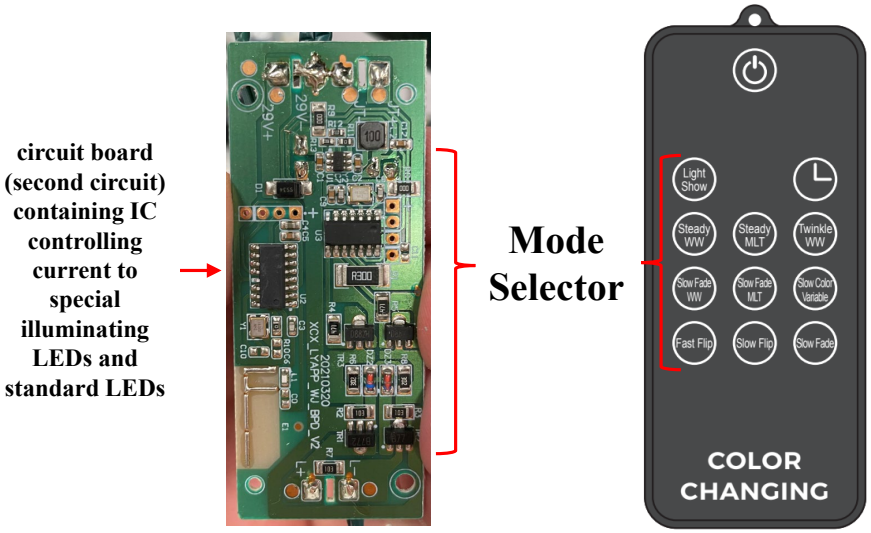 The Grand Duchess Balsam Fir product contains a mode selector connected to a circuit board that allows users to change between "Steady On" or "Twinkling Effect" modes for the special illumination LEDs. When a user selects the "Steady On" mode, the IC on the circuit board interrupts current to the IC in the special illumination LED (first switching circuit). The interruption in power causes the IC on the special illumination LED to reset the steady-on-to-twinkling cycle and return to a "Steady On" state. When a user selects a "Steady On" mode, the IC on the circuit board (second circuit) produces a series (a plurality) of pulses to the IC (first circuit) on the special illuminating LEDs sufficient to keep the LEDs in a "Steady On" state, and not proceeding to the "Twinkling Effect" state in the steady-on-to-twinkling cycle. See image below showing frequency interruption pulses from the LED on the circuit board creating a "Steady On" visual effect. When a user selects "Twinkling Effect" mode the IC (second circuit) allows uninterrupted (non-pulsing) DC to flow to allow the IC (first circuit) in the special illumination LED to operate normally and create and on/off repetitive function causing the lights to produce a "twinkling effect"; see item b above.

LEDup "Grand Duchess" compared to US 9,554,437 claims 1-7 and 10-11

Claim	LEDup Grand Duchess
	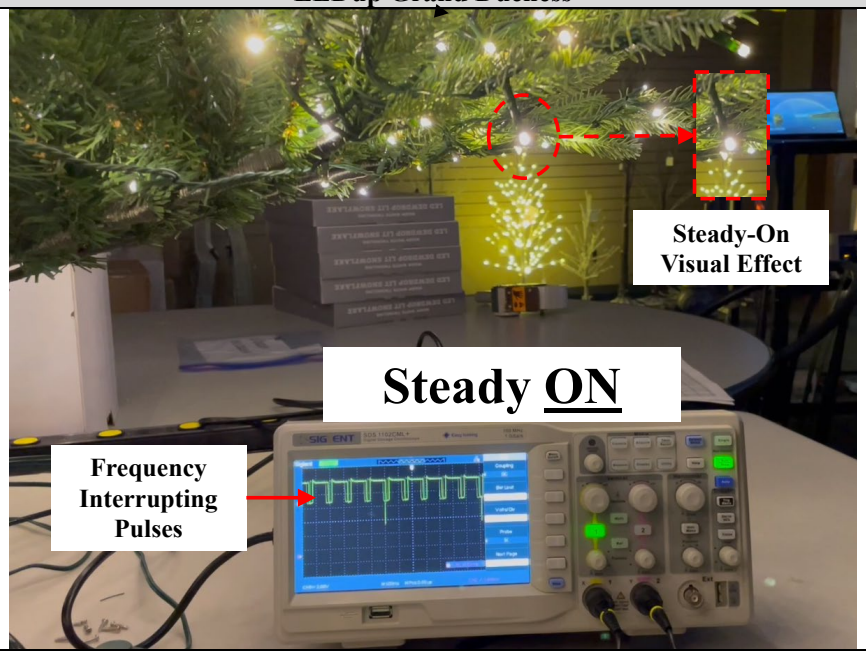
2. The system of claim 1 wherein said interruption frequency is at least sufficient to create the visual appearance in the illumination element of a steady-on light.	When a user selects "Steady On" mode, the IC on the circuit board produces a series (a plurality) of illuminating pulses sufficient to keep the LEDs in a "Steady On" state, and creating the visual appearance of an uninterrupted "Steady On" light.
3. The system of claim 2 wherein said interruption frequency is at least sufficient to provide a plurality of light pulses from the illumination element which appear to have substantially uniform intensity.	The light emitting from the special illuminating LEDs appear to have substantially uniform intensity in the "Steady On" state.
4. The system of claim 2 wherein said interruption frequency is at least more than the frequency of a human eye to observe flicker in the illumination element.	The light emitting from the special illuminating LEDs appear to have substantially uniform intensity in the "Steady On" state to a human observer.

LEDup "Grand Duchess" compared to US 9,554,437 claims 1-7 and 10-11

Claim	LEDup Grand Duchess
5. The system of claim 2 wherein said interruption frequency includes periodically energizing and reenergizing the second circuit to at least sufficiently to create the visual appearance in the illumination element of a steady-on illumination.	The light emitting from the special illuminating LEDs appear to have the appearance of "Steady On" illumination.
6. The system of claim 2 wherein said special visual function is a twinkle light effect.	When the special illumination ICs in the LEDs are initially powered up, the LED begins with a steady-on illumination, followed by a twinkling (blinking) state for a period, before restarting the cycle by returning to the steady-on illumination and repeating the steady-on-to-twinkling cycle for as long as power is maintained continuously. See images below of LED blinking "on" and "off" while power is maintained continuously. 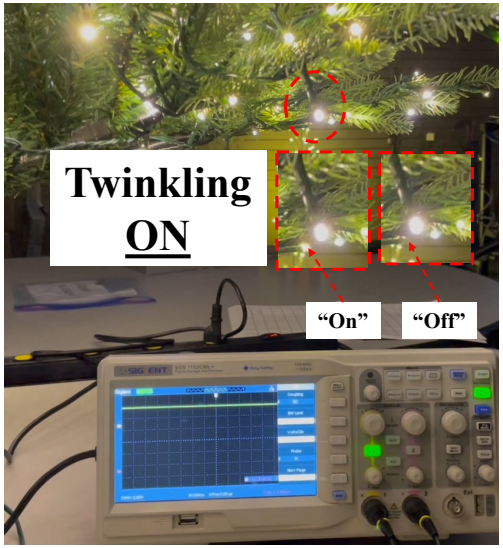
7. The system of claim 2 wherein said special visual function is a blinking light effect.	When the special illumination ICs in the LEDs are initially powered up, the LED begins in a steady-on illumination, followed by a twinkling (blinking) state for a period, before restarting the cycle by returning to the steady-on illumination and repeating the steady-on-to-twinkling cycle creating a twinkling effect for as long as power is maintained continuously. See images below of LED blinking "on" and "off" while power is maintained continuously.

LEDup "Grand Duchess" compared to US 9,554,437 claims 1-7 and 10-11

Claim	LEDup Grand Duchess
	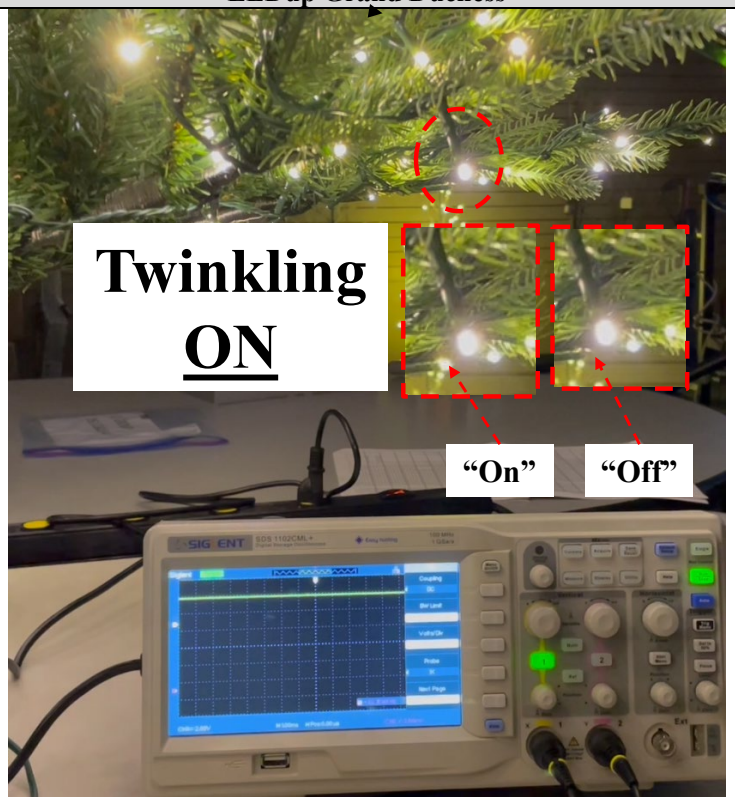
10. The system of claim 2 wherein steady-on includes a momentary illumination at a substantially uniform light output.	The "steady on" state appears as steady on illumination, even though the power to the LED is pulsed (at a frequency fast enough for human observation to see it as steady on).
11. A method of switchably changing the function of a special function bulb controller to switch an illumination element between having visual appearance of steady-on and a visual appearance of a predetermined special	The LEDup "7.5 ft Grand Duchess Balsam Fir Christmas Tree" ("Grand Duchess Balsam Fir") product contains "2,250 color-changing LEDs." See images below of the product.

LEDup "Grand Duchess" compared to US 9,554,437 claims 1-7 and 10-11

Claim	LEDup Grand Duchess
visual function, comprising the steps of:	 Some of the LED lights on the product are special illumination LEDs that have a predetermined on/off twinkling effect. The product has mode selector connected to a circuit board that allows users to change between "Steady On" or "Twinkling Effect" modes for the special illumination LEDs. See image below.

LEDup "Grand Duchess" compared to US 9,554,437 claims 1-7 and 10-11

Claim	LEDup Grand Duchess
	Circuit Board (second circuit) & Mode Selector 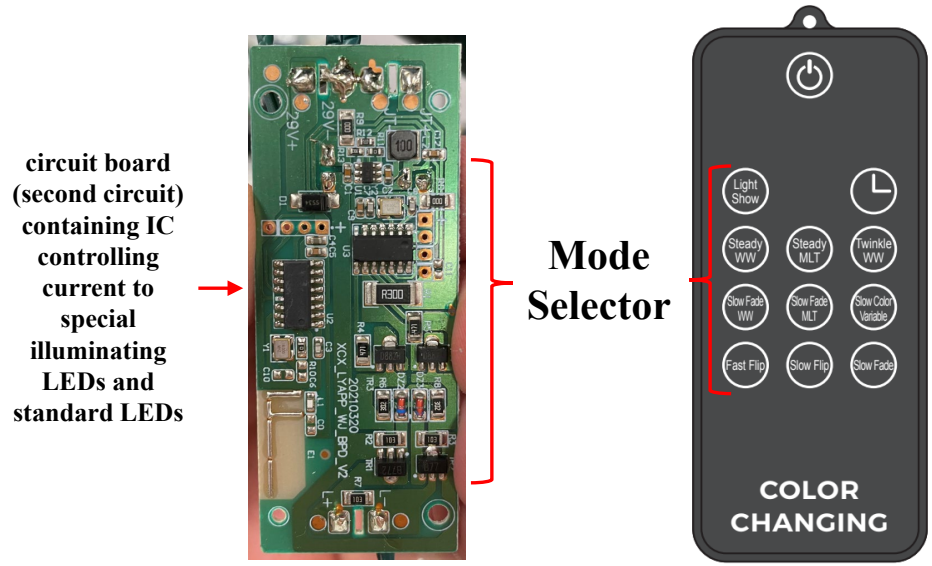 LEDup induces others to practice the claimed method.
a. electrically powering illumination element;	The Grand Duchess Balsam Fir product contains "2,250 color-changing LEDs" powered by electricity. Some of the LED lights are special illumination LEDs that use an on/off twinkling effect which can be in combination with steady on LEDs. Each special illumination LED has an integrated circuit (IC) in it (first circuit). Other LEDs on the product can be standard non switching LED bulbs, similar to the description in the patents. See '437 patent 4:17-20. The standard non switching LEDs do not have an IC in them.
b. in communication with said illumination element, controlling the flow of current to the element to produce a predetermined special illumination visual lighting effect in the illumination element, controlling said element so that when it is powered up starting with an	Each special illumination LED has an integrated circuit (IC). The IC (first circuit) is integrated into each LED unit, similar to the description in the patent. See '437 patent 4:3-11. The IC (first circuit) controls power to the special illumination LED producing a predetermined visual lighting effect that appears as follows: When the IC is initially powered up, the LED begins with a steady-on illumination, followed by a twinkling (blinking) state for a period, before restarting the cycle by returning to the steady-on illumination and repeating the steady-on-to-twinkling cycle for as long as power is maintained continuously. See images below of LED blinking "on" and

LEDup "Grand Duchess" compared to US 9,554,437 claims 1-7 and 10-11

Claim	LEDup Grand Duchess
initial steady on illuminated state in the element and then proceed to said special lighting effects occurring after the steady-on power up and periodically repeating said special lighting effect for a predetermined period of time, and	"off" while power is maintained continuously, as shown by the oscilloscope measurement. 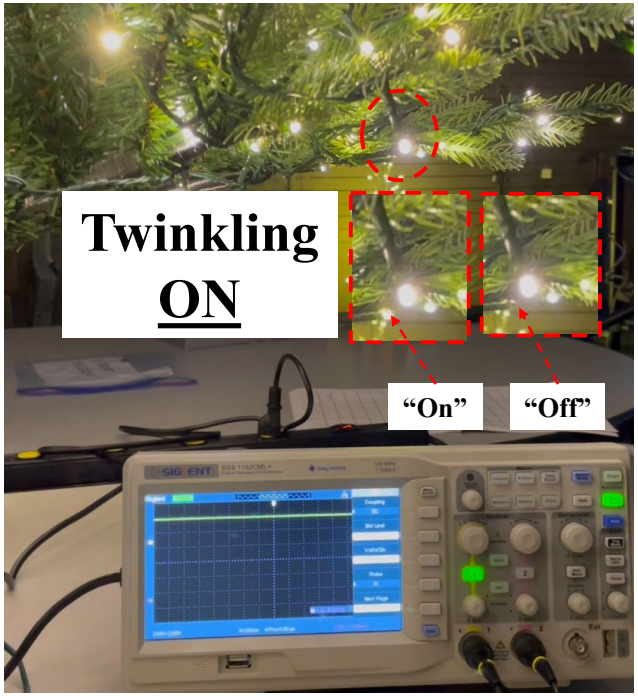 So long as power is maintained constant continuously to the LED IC (first circuit), without interruption, the special illumination LED produces a continuous twinkling (blinking on and off) visual effect.
c. periodically interrupt the flow of current to said illumination element, at an interruption frequency sufficient to cause the steady-on state without proceeding to said special lighting effects, and thereby producing a plurality of steady-on illumination pulses in the illumination element.	The Grand Duchess Balsam Fir product has a circuit board containing an IC (second circuit). The IC on the second circuit is in communication with and controls the flow of current to the ICs in the special illuminating LEDs (first circuits). See image below.

LEDup "Grand Duchess" compared to US 9,554,437 claims 1-7 and 10-11

Claim	LEDup Grand Duchess
	Circuit Board (second circuit) & Mode Selector **circuit board (second circuit) containing IC controlling current to special illuminating LEDs and standard LEDs** 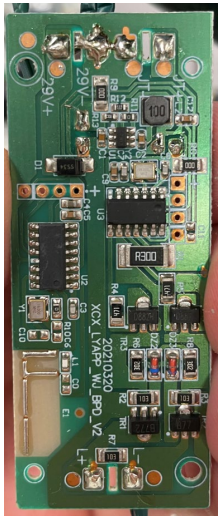 **Mode Selector** The Grand Duchess Balsam Fir product product contains a mode selector connected to a circuit board (second circuit) that allows users to change between "Steady On" or "Twinkling Effect" modes for the special illumination LEDs. When a user selects the "Steady On" mode, the IC on the circuit board interrupts current to the IC in the special illumination LED (first switching circuit). The interruption in power causes the IC (first circuit) on the special illumination LED to reset the steady-on-to-twinkling cycle and return to a "Steady On" state. When a user selects a "Steady On" mode, the IC on the circuit board (second circuit) produces a series (a plurality) of steady on illuminating pulses to the IC on the special illuminating LEDs sufficient to keep the LEDs in a "Steady On" state, and not proceeding to the "Twinkling effect" state in the steady-on-to-twinkling cycle. See image blow showing frequency interruption pulses from the LED on the circuit board creating a "Steady On" visual effect. When a user selects "Twinkling Effect" mode the IC (second circuit) allows uninterrupted (non-pulsing) DC to flow to allow the IC (first circuit) in the special illumination LED to operate normally and create and on/off repetitive function causing the lights to create a "twinkling effect", see item b above.

EXHIBIT G

LEDup "7.5 ft. & 9 ft. Starry Light Tree" compared to US 10,080,265 claims 1-7, and 10

Claim	LEDup 7.5 ft. & 9 ft. Starry Light Trees
1. A system for switchably changing the function of a special function bulb controller to switch an illumination element between having visual appearance of steady-on and a visual appearance of a predetermined special visual function, comprising:	The LEDup "7.5 ft. Starry Light Fraser Fir Flocked LED Pre Lit Artificial Christmas Tree with 1500 Color Changing Lights" ("7.5 ft. Starry Light Tree") product contains "1500 Color Changing Lights." The LEDup "9 ft Starry Light Flocked Christmas Tree" ("9 ft Starry Light Tree") product contains "3000 remote-operated LEDs." See images below of products. 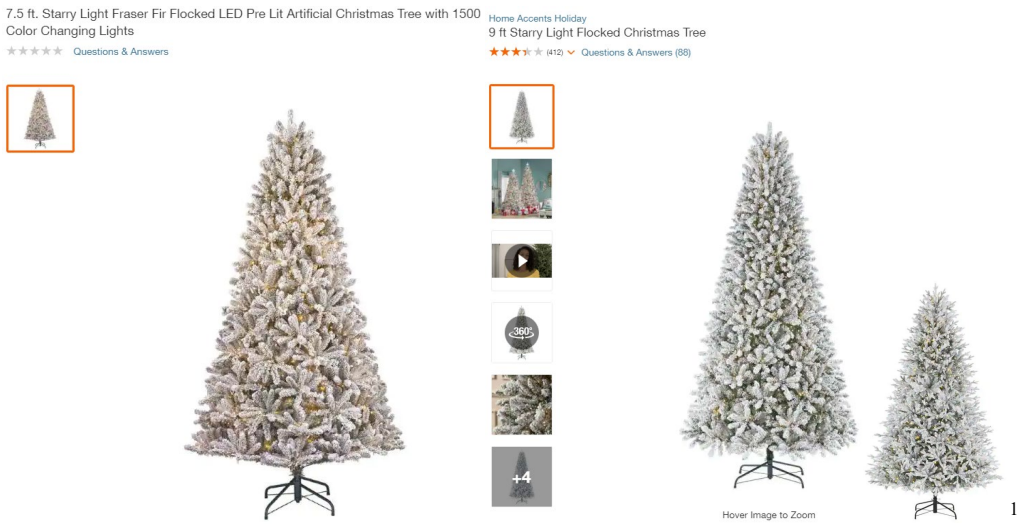 [1] Some of the LED lights on the products are special illumination LEDs that have a predetermined on/off twinkling effect. The products have a mode selector connected to a circuit board that allows users to change between "Steady On" or "Twinkling Effect" modes for the special illumination LEDs. See image below.

[1] As seen at https://www.homedepot.com/p/Home-Accents-Holiday-7-5-ft-Starry-Light-Fraser-Fir-Flocked-LED-Pre-Lit-Artificial-Christmas-Tree-with-1500-Color-Changing-Lights-016017552052185/320110693, and https://www.homedepot.com/p/Home-Accents-Holiday-9-ft-Starry-Light-Flocked-Christmas-Tree-21LE31009/316122908, accessed August 10, 2022

LEDup "7.5 ft. & 9 ft. Starry Light Tree" compared to US 10,080,265 claims 1-7, and 10

Claim	LEDup 7.5 ft. & 9 ft. Starry Light Trees
	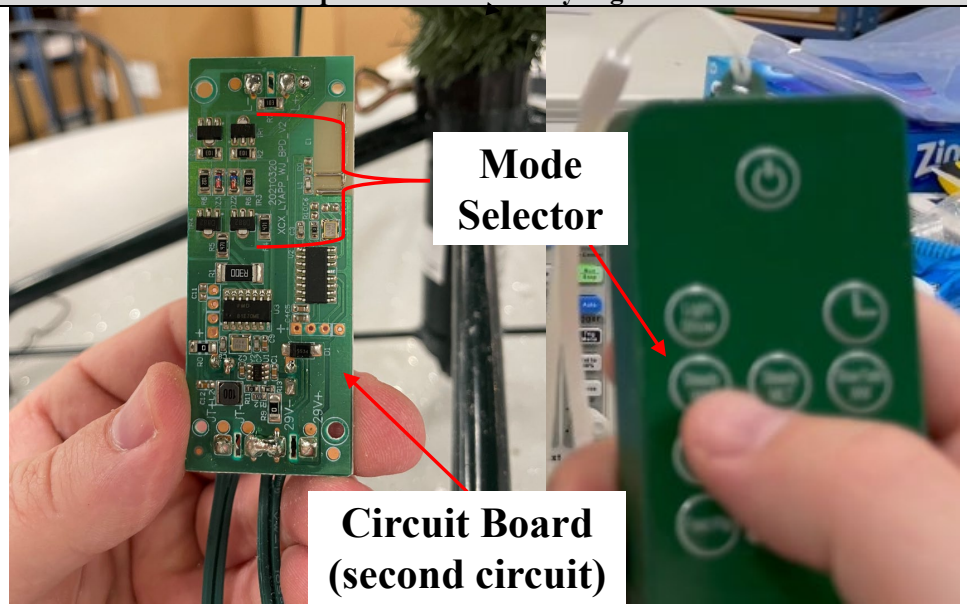 LEDup makes, offers for sale, sells, and imports the claimed system and induce others including Home Depot to offer for sale, sell and use the same.
a. an electrically powered illumination element;	The 7.5 ft. Starry Light Tree product contains "1500 Color Changing Lights" powered by electricity. The 9 ft Starry Light Tree product contains "3000 remote-operated LEDs" powered by electricity. Some of the LED lights are special illumination LEDs that produce an on/off twinkling effect possibly in combination with steady on LEDs. Each special illumination LED has an integrated circuit (IC) in it. Other LEDs on the product are standard non switching LED bulbs, similar to the description in the patents. See '265 patent 4:17-20. The standard non-switching LEDs (if provided) do not have an IC in them.

LEDup "7.5 ft. & 9 ft. Starry Light Tree" compared to US 10,080,265 claims 1-7, and 10

Claim	LEDup 7.5 ft. & 9 ft. Starry Light Trees
b. a first switching circuit in communication said illumination element for controlling the flow of current to the element, said first circuit containing a controller for controlling the power to said illumination element to produce a predetermined special illumination visual lighting effect in the illumination element, said first circuit initiating said lighting effect when powered up starting from an initial on illuminated state in the element and proceeding to other special lighting effects occurring after the on power up and periodically repeating said special lighting effect for a predetermined period of time, and	Each special illumination LED has an integrated circuit (IC) that constitutes a "first switching circuit." The IC is integrated into each LED unit, similar to the description in the patent. See '437 patent 4:3-11. The IC controls power to the special illumination LED producing a predetermined visual lighting effect that appears as follows: when the IC is initially powered up, the LED begins with a steady-on illumination, followed by a twinkling (blinking) state for a period, before restarting the cycle by returning to the steady-on illumination and repeating the steady-on-to-twinkling cycle for as long as power is maintained continuously. See images below of LED blinking "on" and "off" while power is maintained continuously, as shown by the oscilloscope measurement. 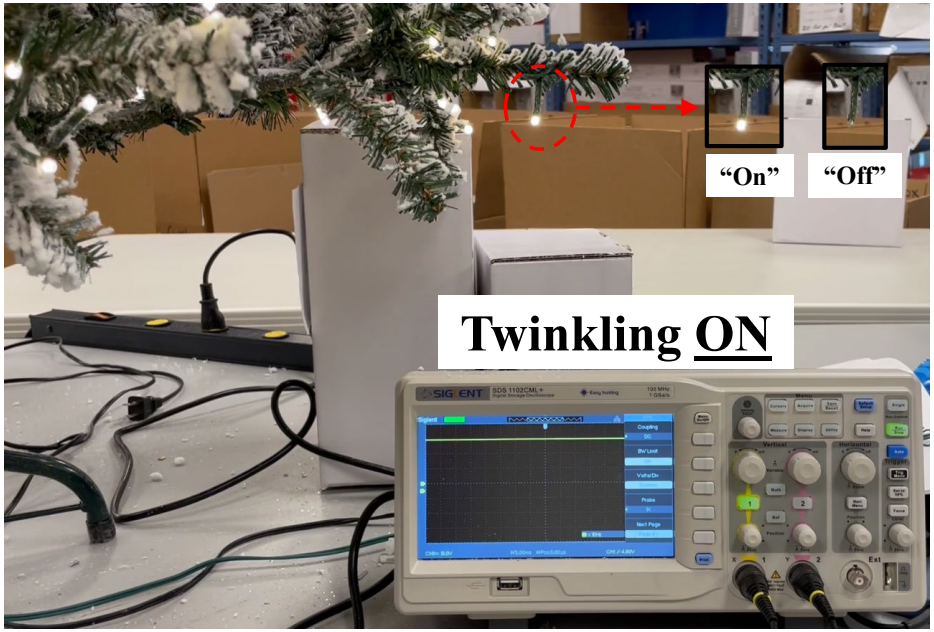 So long as power is maintained constant continuously to the LED IC, without interruption, the LED produces a continuous twinkling (blinking on and off) visual effect.
c. a second switching circuit, configured to periodically interrupt the flow of current to said first circuit, at an interruption frequency	The 7.5 ft. Starry Light Tree and 9 ft. Starry Light Tree products have a circuit board containing an IC that includes a function which constitutes a "second switching circuit." The IC on the circuit is in communication with and controls the flow of current to the ICs in the special illuminating LEDs (first circuits). See below.

LEDup "7.5 ft. & 9 ft. Starry Light Tree" compared to US 10,080,265 claims 1-7, and 10

Claim	LEDup 7.5 ft. & 9 ft. Starry Light Trees
sufficient to cause the first circuit to reset to its on state without proceeding to said other special lighting effects, and thereby producing a plurality of on illumination pulses in the illumination element, so that a viewer perceives the illumination element as always on.	**circuit board (second circuit) containing IC controlling current to special illuminating LEDs and standard LEDs** 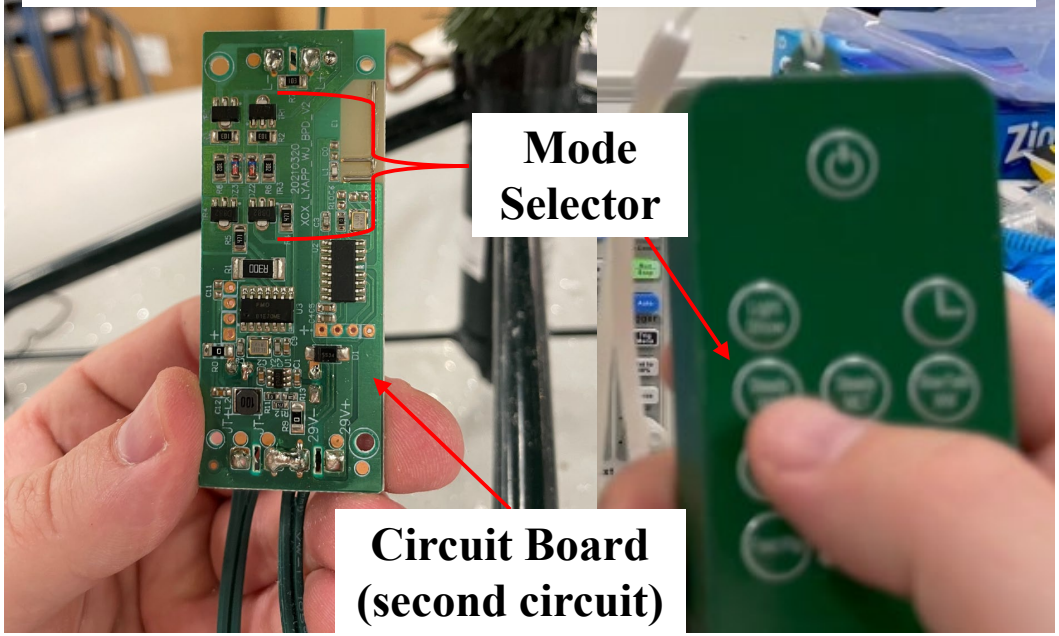 The 7.5 ft. Starry Light Tree and 9 ft. Starry Light Tree products contain a mode selector connected to a circuit board that allows users to change between "Steady On" or "Twinkling Effect" modes for the special illumination LEDs. When a user selects the "Steady On" mode, the IC on the circuit board interrupts current to the IC in the special illumination LED (first switching circuit). The interruption in power causes the IC on the special illumination LED to reset the steady-on-to-twinkling cycle and return to a "Steady On" state. When a user selects a "Steady On" mode, the IC on the circuit board (second circuit) produces a series (a plurality) of interrupting pulses to the IC (first circuit) on the special illuminating LEDs sufficient to keep the LEDs in a "Steady On" state, and not proceeding to the "Twinkling effect" state in the steady-on-to-twinkling cycle. See

LEDup "7.5 ft. & 9 ft. Starry Light Tree" compared to US 10,080,265 claims 1-7, and 10

Claim	LEDup 7.5 ft. & 9 ft. Starry Light Trees
	image below showing frequency interruption pulses from the LED on the circuit board creating a "Steady On" visual effect. When a user selects "Twinkling Effect" mode the IC (second circuit) allows uninterrupted (non-pulsing) DC to flow to allow the IC (first circuit) in the special illumination LED to operate normally and create and on/off repetitive function causing the lights to produce a "twinkling effect." See item b above. 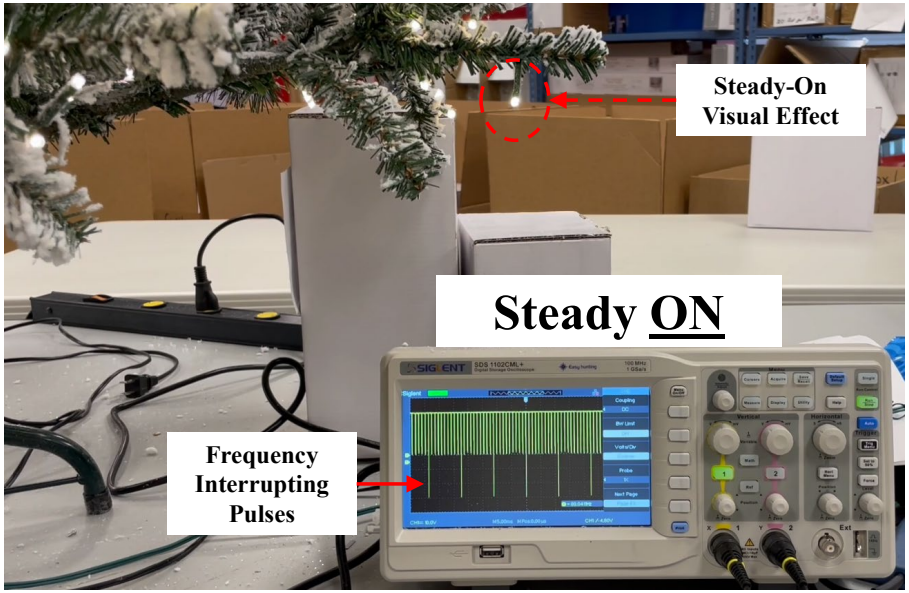
2. The system of claim 1 wherein said interruption frequency is at least sufficient to create the visual appearance in the illumination element of a steady on light.	When a user selects "Steady On" mode, the IC on the circuit board produces a series (a plurality) of illuminating pulses sufficient to keep the LEDs in a "Steady On" state, and creating the visual appearance of an uninterrupted "Steady On" light.
3. The system of claim 2 wherein said interruption frequency is at least sufficient to provide a plurality of light pulses from the illumination element which appear of substantially uniform intensity.	The light emitting from the special illuminating LEDs appear to have substantially uniform intensity in the "Steady On" state.

LEDup "7.5 ft. & 9 ft. Starry Light Tree" compared to US 10,080,265 claims 1-7, and 10

Claim	LEDup 7.5 ft. & 9 ft. Starry Light Trees
4. The system of claim 2 wherein said interruption frequency is at least beyond the frequency of a human to observe flicker in the illumination element.	The light emitting from the special illuminating LEDs appear to have substantially uniform intensity in the "Steady On" state to a human observer.
5. The system of claim 2 wherein said interruption frequency includes periodically energizing and reenergizing the second circuit to is at least sufficient to create the visual appearance in the illumination element of a steady on illumination.	The light emitting from the special illuminating LEDs appear to have the appearance of "Steady On" illumination.
6. The system of claim 2 wherein said special function is a twinkle light effect.	When the special illumination ICs in the LEDs are initially powered up, the LED begins with a steady-on illumination, followed by a twinkling (blinking) state for a period, before restarting the cycle by returning to the steady-on illumination and repeating the steady-on-to-twinkling cycle for as long as power is maintained continuously. See images below of LED blinking "on" and "off" while power is maintained continuously. 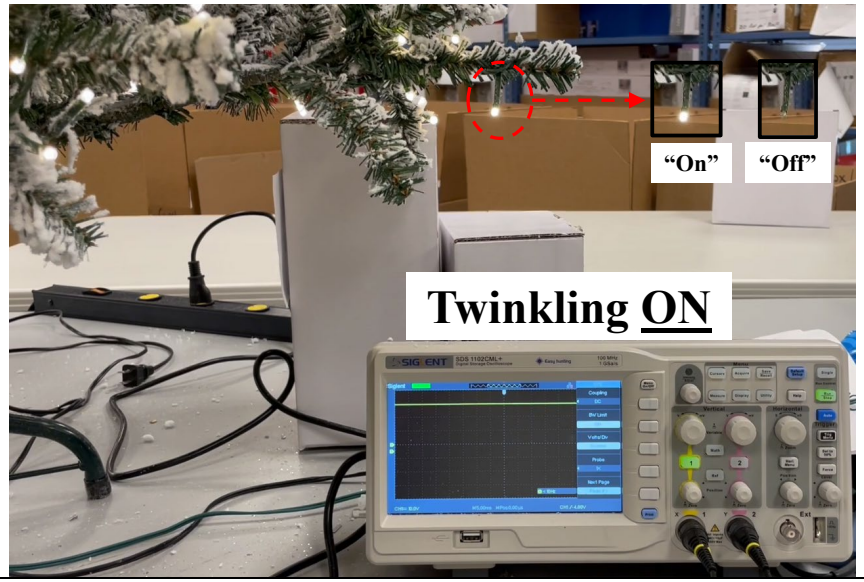

LEDup "7.5 ft. & 9 ft. Starry Light Tree" compared to US 10,080,265 claims 1-7, and 10

Claim	LEDup 7.5 ft. & 9 ft. Starry Light Trees
7. The system of claim 2 wherein said special function is a blinking light effect.	When the special illumination ICs in the LEDs are initially powered up, the LED begins in a steady-on illumination, followed by a twinkling (blinking) state for a period, before restarting the cycle by returning to the steady-on illumination and repeating the steady-on-to-twinkling cycle for as long as power is maintained continuously. See images below of LED blinking "on" and "off" while power is maintained continuously. 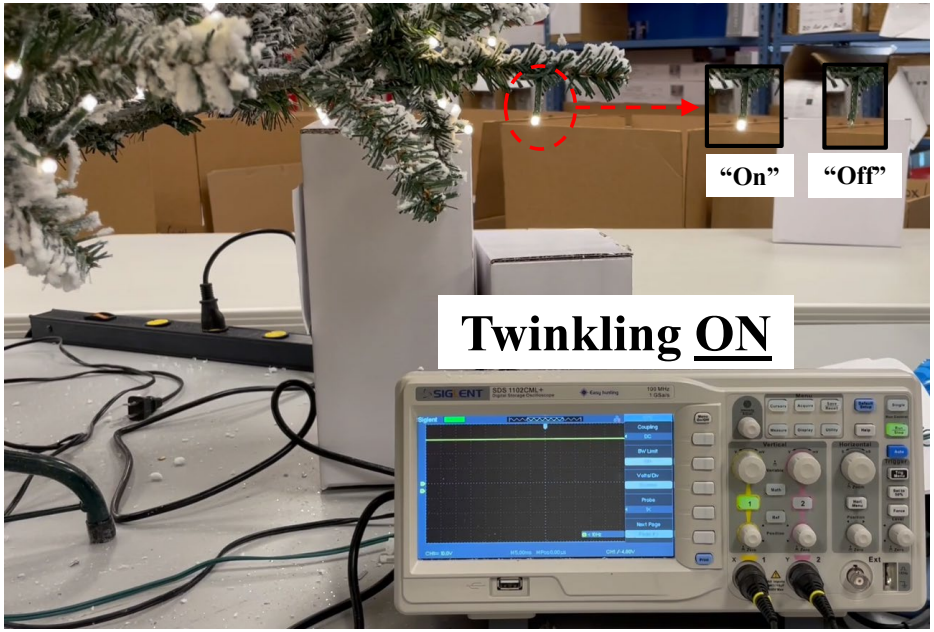
10. The system of claim 2 wherein steady on includes a momentary illumination at a substantially uniform light output.	The "steady on" state appears as steady on illumination, even though the power to the LED is pulsed (at a frequency fast enough for human observation to see it as steady on).

EXHIBIT H

LEDup "Grand Duchess" compared to US 10,080,265 claims 1-7, and 10

Claim	LEDup Grand Duchess
1. A system for switchably changing the function of a special function bulb controller to switch an illumination element between having visual appearance of steady-on and a visual appearance of a predetermined special visual function, comprising:	The LEDup "7.5 ft Grand Duchess Balsam Fir Christmas Tree" ("Grand Duchess Balsam Fir") product contains "2,250 color-changing LEDs." See image below of the product. [1] Some of the LED lights on the product are special illumination LEDs that have a predetermined on/off twinkling effect. The product has a mode selector connected to a circuit board that allows users to change between "Steady On" or "Twinkling Effect" modes for the special illumination LEDs. See image below.

[1] As seen at https://www.homedepot.com/p/Home-Accents-Holiday-7-5-ft-Grand-Duchess-Balsam-Fir-Christmas-Tree-21LE31007/320110680, and, accessed August 15, 2022.

LEDup "Grand Duchess" compared to US 10,080,265 claims 1-7, and 10

Claim	LEDup Grand Duchess
	Circuit Board (second circuit) & Mode Selector **circuit board (second circuit) containing IC controlling current to special illuminating LEDs and standard LEDs** 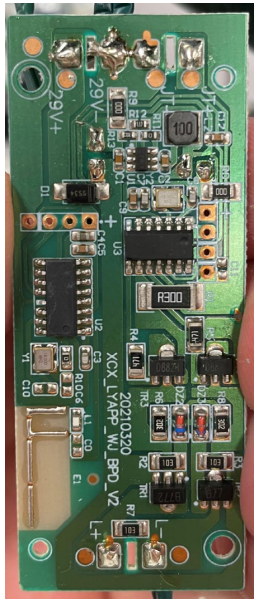 **Mode Selector** LEDup makes, offers for sale, sells, and imports the claimed system and induce others including Home Depot to offer for sale, sell and use the same.
a. an electrically powered illumination element;	The Grand Duchess Balsam Fir product contains "2,250 color-changing LEDs" powered by electricity. Some of the LED lights are special illumination LEDs that produce an on/off twinkling effect possibly in combination with steady on LEDs. Each special illumination LED has an integrated circuit (IC) in it. Other LEDs on the product are standard non switching LED bulbs, similar to the description in the patents. See '265 patent 4:17-20. The standard non switching LEDs (if provided) do not have an IC in them.

LEDup "Grand Duchess" compared to US 10,080,265 claims 1-7, and 10

Claim	LEDup Grand Duchess
b. a first switching circuit in communication said illumination element for controlling the flow of current to the element, said first circuit containing a controller for controlling the power to said illumination element to produce a predetermined special illumination visual lighting effect in the illumination element, said first circuit initiating said lighting effect when powered up starting from an initial on illuminated state in the element and proceeding to other special lighting effects occurring after the on power up and periodically repeating said special lighting effect for a predetermined period of time, and	Each special illumination LED has an integrated circuit (IC) that constitutes a "first switching circuit." The IC is integrated into each LED unit, similar to the description in the patent. See '437 patent 4:3-11. The IC controls power to the special illumination LED producing a predetermined visual lighting effect that appears as follows: when the IC is initially powered up, the LED begins with a steady-on illumination, followed by a twinkling (blinking) state for a period, before restarting the cycle by returning to the steady-on illumination and repeating the steady-on-to-twinkling cycle for as long as power is maintained continuously. See images below of LED blinking "on" and "off" while power is maintained continuously, as shown by the oscilloscope measurement. 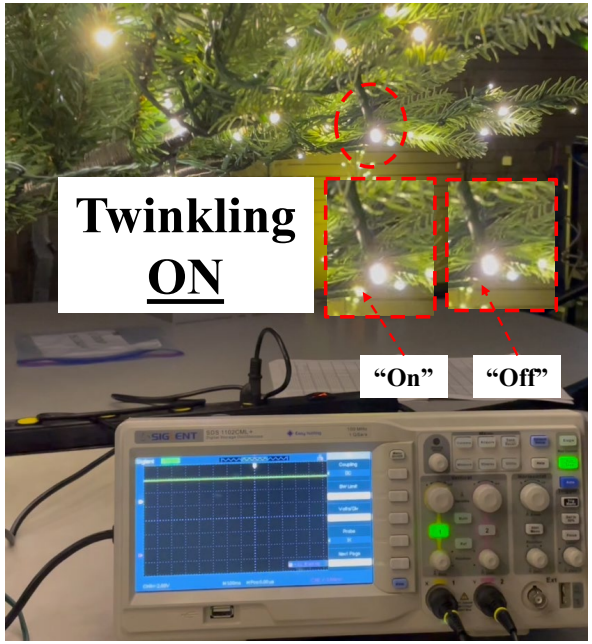 So long as power is maintained constant continuously to the LED IC, without interruption, the LED produces a continuous twinkling (blinking on and off) visual effect.
c. a second switching circuit, configured to periodically interrupt the flow of current to said first circuit, at an interruption frequency sufficient to cause the first circuit	The Grand Duchess Balsam Fir product has a circuit board containing an IC that includes a function which constitutes a "second switching circuit." The IC on the circuit is in communication with and controls the flow of current to the ICs in the special illuminating LEDs (first circuits). See below.

LEDup "Grand Duchess" compared to US 10,080,265 claims 1-7, and 10

Claim	LEDup Grand Duchess
to reset to its on state without proceeding to said other special lighting effects, and thereby producing a plurality of on illumination pulses in the illumination element, so that a viewer perceives the illumination element as always on.	**Circuit Board (second circuit) & Mode Selector** 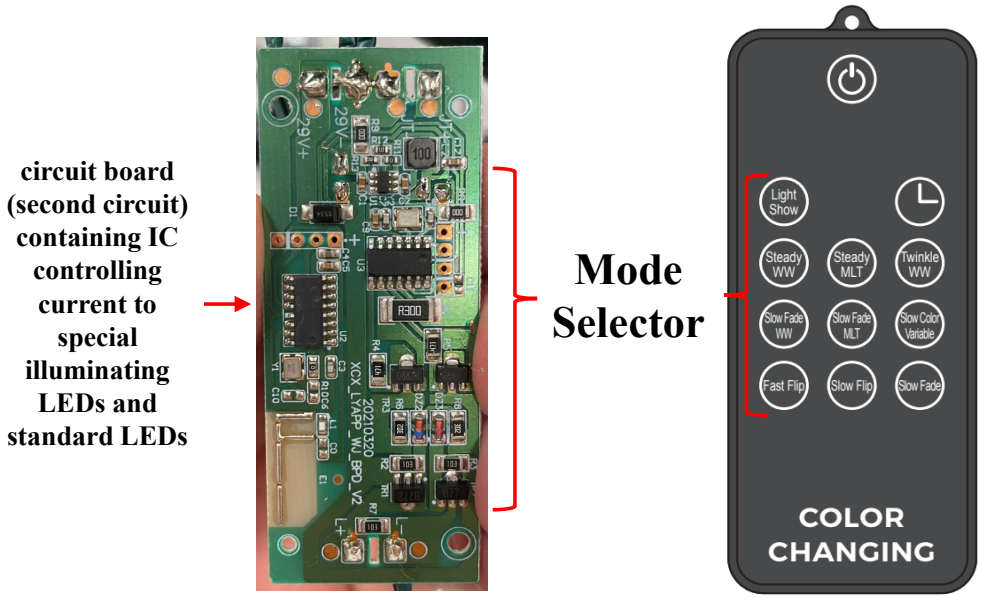 The Grand Duchess Balsam Fir product contains a mode selector connected to a circuit board that allows users to change between "Steady On" or "Twinkling Effect" modes for the special illumination LEDs. When a user selects the "Steady On" mode, the IC on the circuit board interrupts current to the IC in the special illumination LED (first switching circuit). The interruption in power causes the IC on the special illumination LED to reset the steady-on-to-twinkling cycle and return to a "Steady On" state. When a user selects a "Steady On" mode, the IC on the circuit board (second circuit) produces a series (a plurality) of interrupting pulses to the IC (first circuit) on the special illuminating LEDs sufficient to keep the LEDs in a "Steady On" state, and not proceeding to the "Twinkling effect" state in the steady-on-to-twinkling cycle. See image below showing frequency interruption pulses from the LED on the circuit board creating a "Steady On" visual effect. When a user selects "Twinkling Effect" mode the IC (second circuit) allows uninterrupted (non-pulsing) DC to flow to allow the IC (first circuit) in the special illumination LED to operate normally and create and on/off repetitive function causing the lights to produce a "twinkling effect." See item b above.

LEDup "Grand Duchess" compared to US 10,080,265 claims 1-7, and 10

Claim	LEDup Grand Duchess
	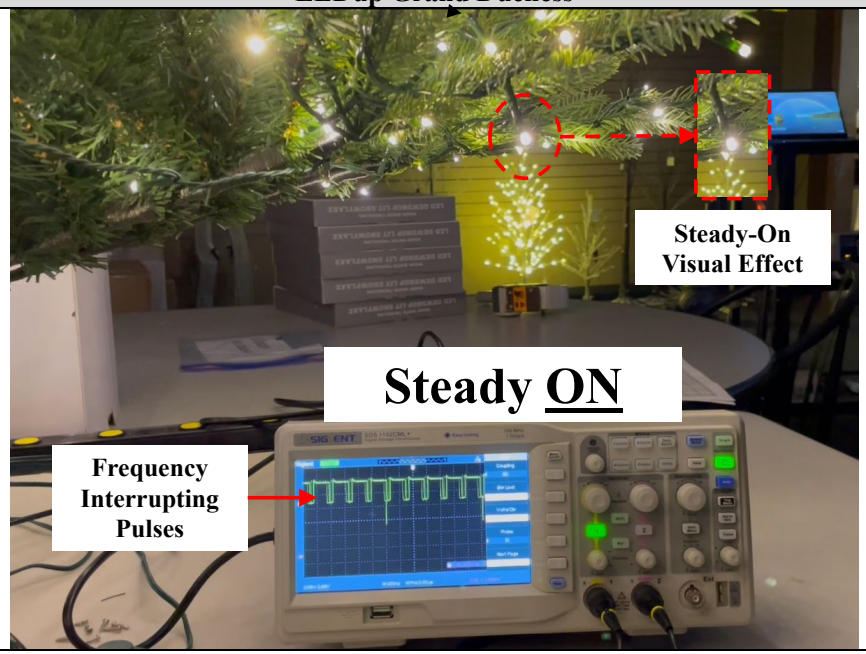
2. The system of claim 1 wherein said interruption frequency is at least sufficient to create the visual appearance in the illumination element of a steady on light.	When a user selects "Steady On" mode, the IC on the circuit board produces a series (a plurality) of illuminating pulses sufficient to keep the LEDs in a "Steady On" state, and creating the visual appearance of an uninterrupted "Steady On" light.
3. The system of claim 2 wherein said interruption frequency is at least sufficient to provide a plurality of light pulses from the illumination element which appear of substantially uniform intensity.	The light emitting from the special illuminating LEDs appear to have substantially uniform intensity in the "Steady On" state.
4. The system of claim 2 wherein said interruption frequency is at least beyond the frequency of a human to observe flicker in the illumination element.	The light emitting from the special illuminating LEDs appear to have substantially uniform intensity in the "Steady On" state to a human observer.

LEDup "Grand Duchess" compared to US 10,080,265 claims 1-7, and 10

Claim	LEDup Grand Duchess
5. The system of claim 2 wherein said interruption frequency includes periodically energizing and reenergizing the second circuit to is at least sufficient to create the visual appearance in the illumination element of a steady on illumination.	The light emitting from the special illuminating LEDs appear to have the appearance of "Steady On" illumination.
6. The system of claim 2 wherein said special function is a twinkle light effect.	When the special illumination ICs in the LEDs are initially powered up, the LED begins with a steady-on illumination, followed by a twinkling (blinking) state for a period, before restarting the cycle by returning to the steady-on illumination and repeating the steady-on-to-twinkling cycle for as long as power is maintained continuously. See images below of LED blinking "on" and "off" while power is maintained continuously. 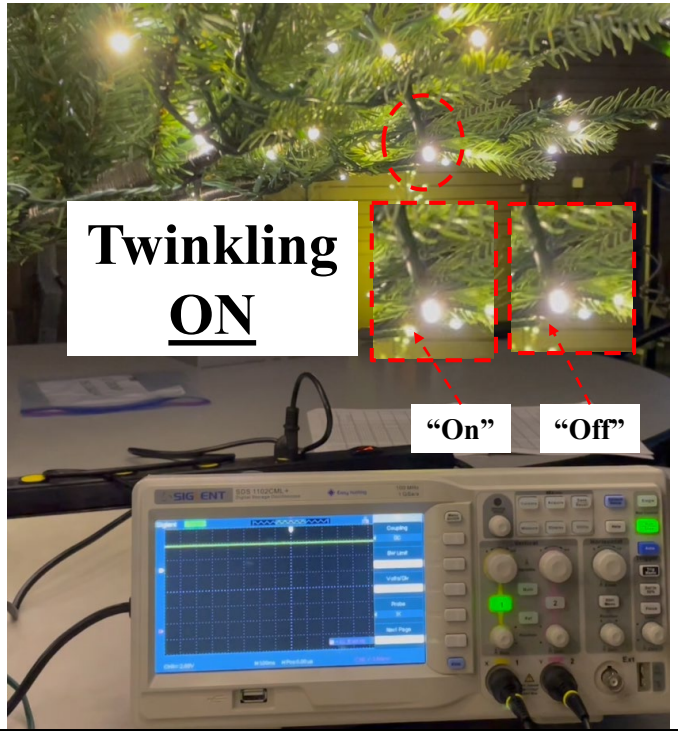

LEDup "Grand Duchess" compared to US 10,080,265 claims 1-7, and 10

Claim	LEDup Grand Duchess
7. The system of claim 2 wherein said special function is a blinking light effect.	When the special illumination ICs in the LEDs are initially powered up, the LED begins in a steady-on illumination, followed by a twinkling (blinking) state for a period, before restarting the cycle by returning to the steady-on illumination and repeating the steady-on-to-twinkling cycle for as long as power is maintained continuously. See images below of LED blinking "on" and "off" while power is maintained continuously. 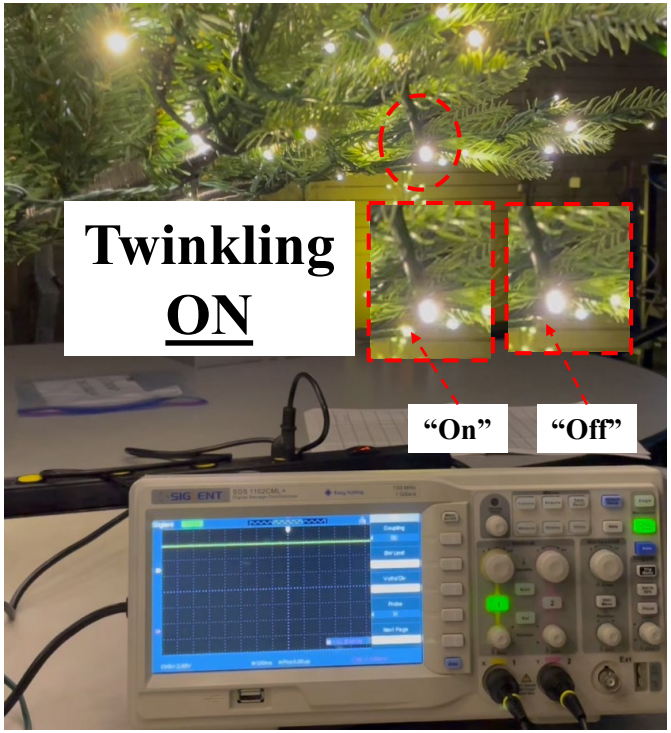
10. The system of claim 2 wherein steady on includes a momentary illumination at a substantially uniform light output.	The "steady on" state appears as steady on illumination, even though the power to the LED is pulsed (at a frequency fast enough for human observation to see it as steady on).

EXHIBIT I

LEDup Light Strings compared to US 11,096,252 claims 1, 2, 4, 8, and 10

Claim	LEDup Light Strings
1. A resistor bypass circuit for a series lighting circuit comprising a plurality of serially connected LED light sources and a bypass resistor being connected in parallel with at least one of the respective light sources,	LEDup's Light Strings contain a plurality of serially connected LED lights within an electrical circuit. See image below. The LED lights are connected in "series" because current flows from one light to the next in the circuit, and removal of a lamp holder with the LED and bypass resistor in it causes a number of bulbs to go out. The circuit contains a bypass resister that permits the LEDs to "continu[ously] stay on even if a bulb burns out, is loose or is missing. See image of prouct packaging below. The bypass resistor is "in parallel" to the current flowing to the LED light because the resistor circuit provides a second path for current to flow through. See image below from product packaging.

LEDup Light Strings compared to US 11,096,252 claims 1, 2, 4, 8, and 10

Claim	LEDup Light Strings
	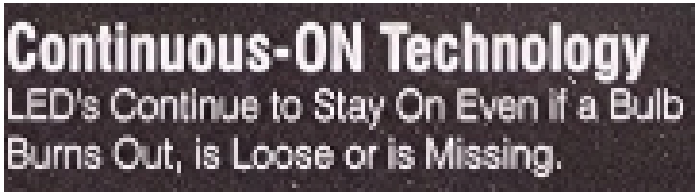
said bypass resistor being in circuit and conducting current at all times when current is flowing through the circuit regardless of whether the LED light sources are conducting current therethrough and	Use of a clamp on probe shows by testing of the current flowing through the bypass resistor circuit in the LED light that current flows through the bypass resistor at all times when power is supplied to the Light Strings, regardless of whether the LED light source is burnt out, removed, or otherwise not carrying current. See image below of clamp on current probe connected to multimeter where the probe is placed over a bypass resistor lead in LED light from LEDup's Light String.

LEDup Light Strings compared to US 11,096,252 claims 1, 2, 4, 8, and 10

Claim	LEDup Light Strings
	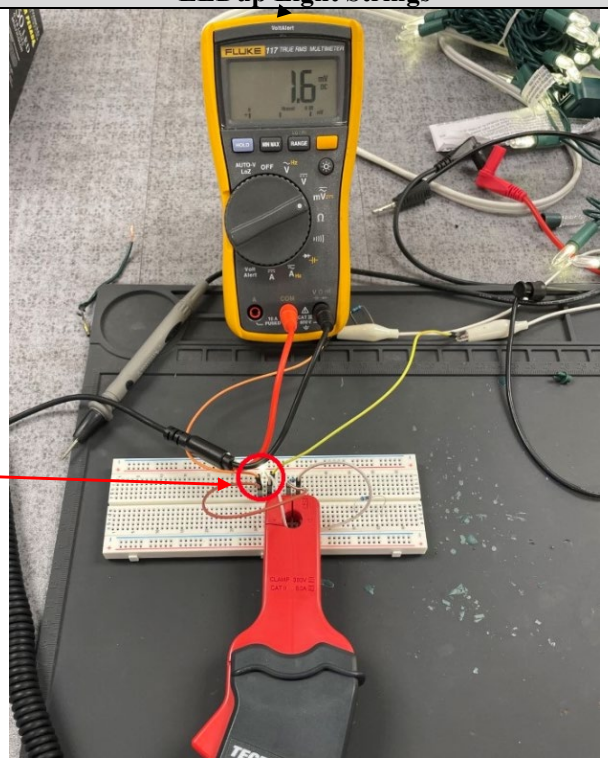
wherein said bypass resistor is capable operating on a one hundred percent duty cycle.	When power is supplied to the Light String, current passes through the resistor at all times (100% duty cycle).
2. The resistor bypass circuit of claim 1, where the circuit is series-parallel connected.	Removal of a lampholder with the LED and resistor bypass circuit causes some of the bulbs in the set to go out, as there is a second circuit of series connected bulbs connected in parallel with the first set of series connected bulbs.
4. The resistor bypass circuit of claim 1, wherein the LED light source uses 0.20 watts or less.	The LED light sources have an approximate voltage drop of 3.4V and an operating current of approximately 0.02A, which is 0.068W and is less than 0.20 Watts.

LEDup Light Strings compared to US 11,096,252 claims 1, 2, 4, 8, and 10

Claim	LEDup Light Strings
8. The resistor bypass circuit of claim 1 being utilized in AC or DC circuits powered form a power source selected from the list consisting of batteries, step down transformers, AC utility power, or converters from AC to DC or DC to AC power, pulsed DC, and filtered or unfiltered DC, or partially filtered AC.	The light strings all plug into a 120V AC power source (standard 120V wall outlet).
10. A resistor bypass circuit for a series lighting circuit comprising a plurality of serially connected LED light sources and a bypass resistor being connected in parallel with at least one of the respective light sources,	LEDup's Light Strings contain a plurality of serially connected LED lights within an electrical circuit. See image below. The LED lights are connected in "series" because current flows from one light to the next in the circuit, and removal of a lamp holder with the LED and bypass resistor in it causes a number of bulbs to go out. The circuit contains a bypass resister that permits the LEDs to "continu[ously] stay on even if a bulb burns out, is loose or is missing. See image of prouct packaging below. The bypass resistor is "in parallel" to the current flowing to the LED light because the resistor circuit provides a second path for current to flow through. See image below from product packaging.

LEDup Light Strings compared to US 11,096,252 claims 1, 2, 4, 8, and 10

Claim	LEDup Light Strings
	  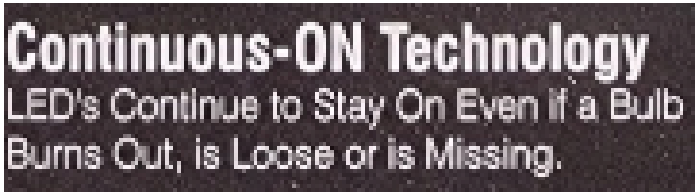
said bypass resistor being in circuit and conducting current at all times when current is flowing through the circuit regardless of whether the LED light sources are conducting current therethrough and	Use of a clamp on probe shows by testing the current flowing through the bypass resistor circuit in the LED light that current flows through the resistor bypass at all times when power is supplied to the Light Strings, regardless of whether the LED light source is burnt out, removed, or otherwise not carrying current. See image below of clamp on current probe connected to multimeter where the probe is placed over a bypass resistor lead in LED light from LEDup's Light String.

LEDup Light Strings compared to US 11,096,252 claims 1, 2, 4, 8, and 10

Claim	LEDup Light Strings
	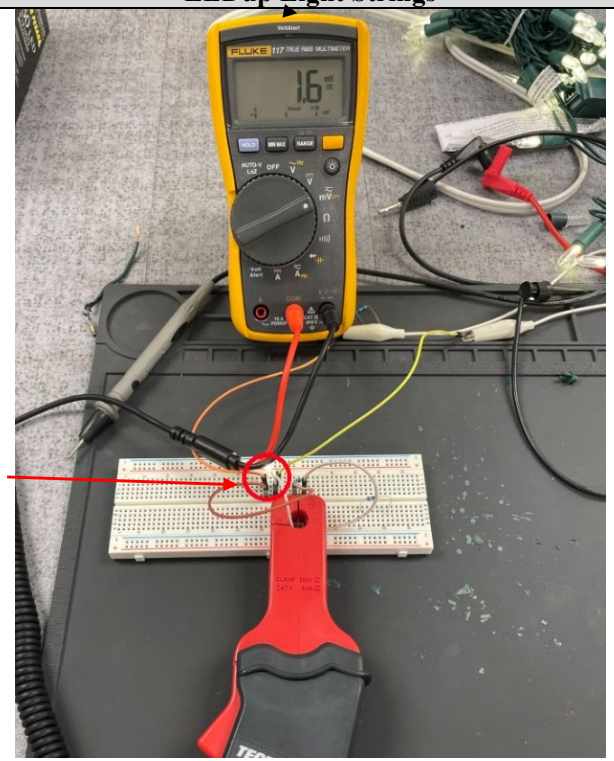
wherein the resistance of the bypass resistor is equal to or greater than the inherent resistance of the light source to which the resistor is attached, thereby minimizing the burn out potential of other light sources in the light string.	Current of the entire light set decreases when a bulb is removed (or burns out), as evidenced by the statement below that LEDs continue to stay on even if a bulb burns out, is loose or is missing as mandated by ANSI/UL 588 marking regulations.

LEDup Light Strings compared to US 11,096,252 claims 1, 2, 4, 8, and 10

Claim	LEDup Light Strings
	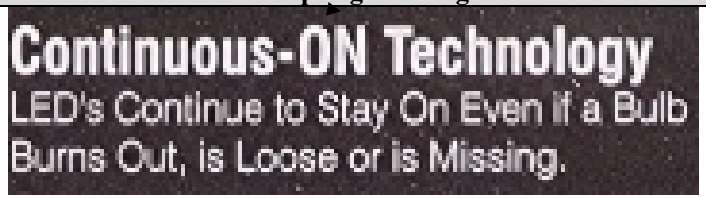 The resistance of the bypass resistor is equal to or greater than the inherent resistance of the light source to which the resistor is attached, as demonstrated by the reduction of the current draw of the lighting circuit as each bulb is removed from its socket. If the resistance of the bypass was lower than the light source, the current draw of the circuit would increase each time a bulb is removed.

EXHIBIT J

LEDup Light Strings compared to US 11,533,794 claims 1, 2, 4, 8, 10, and 15

Claim	LEDup Light Strings
1. A resistor bypass circuit for a lighting circuit comprising a plurality of serially connected LED light sources and a bypass resistor being connected in parallel with at least one of the respective light sources,	LEDup's Light Strings contain a plurality of serially connected LED lights within an electrical circuit. See image below. The LED lights are connected in "series" because current flows from one light to the next in the circuit, and removal of a lamp holder with the LED and bypass resistor in it causes a number of bulbs to go out. The circuit contains a bypass resister that permits the LEDs to "continu[ously] stay on even if a bulb burns out, is loose or is missing. See image of prouct packaging below. The bypass resistor is "in parallel" to the current flowing to the LED light because the resistor circuit provides a second path for current to flow through. See image below from product packaging.

LEDup Light Strings compared to US 11,533,794 claims 1, 2, 4, 8, 10, and 15

Claim	LEDup Light Strings
	  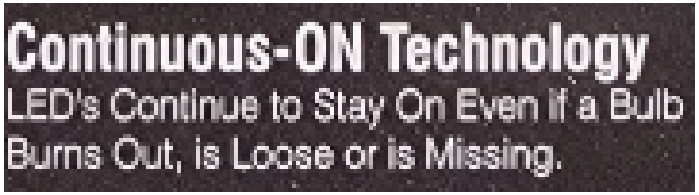
said bypass resistor being in circuit and conducting current at all times across the light sources when current is flowing through the circuit regardless of whether the LED light sources are conducting current therethrough.	Use of a clamp on probe shows by testing of the current flowing through the bypass resistor circuit in the LED light that current flows through the bypass resistor at all times when power is supplied to the Light Strings, regardless of whether the LED light source is burnt out, removed, or otherwise not carrying current. See image below of clamp on current probe connected to multimeter where the probe is placed over a bypass resistor lead in LED light from LEDup's Light String.

LEDup Light Strings compared to US 11,533,794 claims 1, 2, 4, 8, 10, and 15

Claim	LEDup Light Strings
	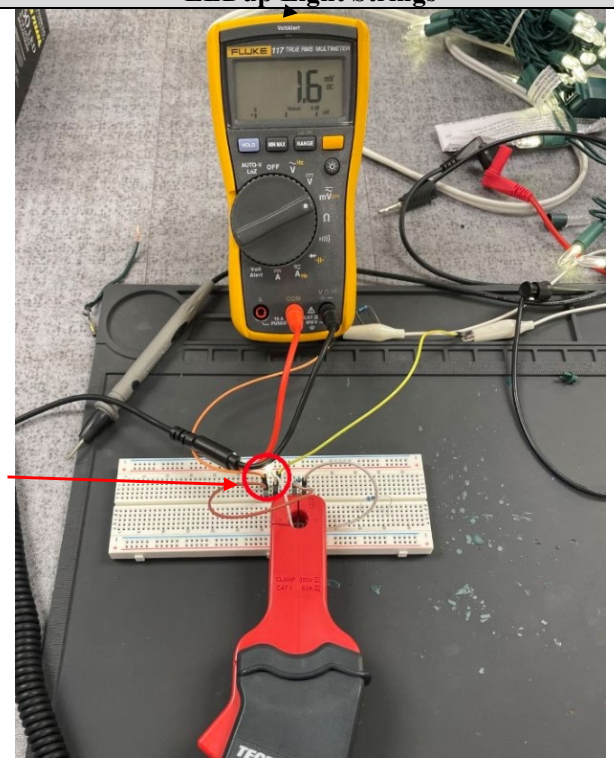
2. The resistor bypass circuit of claim 1, where the circuit is series-parallel connected.	Removal of a lampholder with the LED and resistor bypass circuit causes some of the bulbs in the set to go out, as there is a second circuit of series connected bulbs connected in parallel with the first set of series connected bulbs.
4. The resistor bypass circuit of claim 1, wherein the LED light source uses 0.20 watts or less.	The LED light sources have an approximate voltage drop of 3.4V and an operating current of approximately 0.02A, which is 0.068W and is less than 0.20 Watts.
8. The resistor bypass circuit of claim 1 being utilized in AC or DC circuits powered form a power source selected from the list consisting of batteries,	The light strings all plug into a 120V AC power source (standard 120V wall outlet).

LEDup Light Strings compared to US 11,533,794 claims 1, 2, 4, 8, 10, and 15

Claim	LEDup Light Strings
step down transformers, AC utility power, or converters from AC to DC or DC to AC power, pulsed DC, and filtered or unfiltered DC, or partially filtered AC.	
10. A resistor bypass circuit for a lighting circuit comprising a plurality of serially connected LED light sources and a bypass resistor being connected in parallel with at least one of the respective light sources,	LEDup's Light Strings contain a plurality of serially connected LED lights within an electrical circuit. See image below. The LED lights are connected in "series" because current flows from one light to the next in the circuit, and removal of a lamp holder with the LED and bypass resistor in it causes a number of bulbs to go out. The circuit contains a bypass resister that permits the LEDs to "continu[ously] stay on even if a bulb burns out, is loose or is missing. See image of prouct packaging below. The bypass resistor is "in parallel" to the current flowing to the LED light because the resistor circuit provides a second path for current to flow through. See image below from product packaging.

LEDup Light Strings compared to US 11,533,794 claims 1, 2, 4, 8, 10, and 15

Claim	LEDup Light Strings
	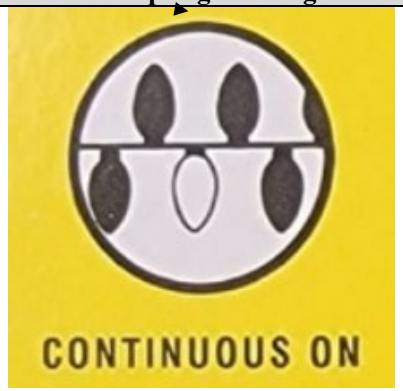 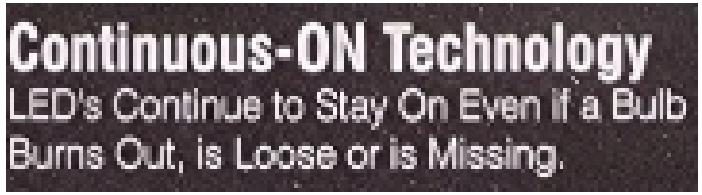
said bypass resistor connected across the at least one light sources and being in circuit and conducting current at all times when current is flowing through the circuit regardless of whether the LED light sources are conducting current therethrough and	Use of a clamp on probe shows by testing of the current flowing through the bypass resistor circuit in the LED light shows that current flows through the resistor bypass at all times when power is supplied to the Light Strings, regardless of whether the LED light source is burnt out, removed, or otherwise not carrying current. See image below of clamp on current probe connected to multimeter where the probe is placed over a bypass resistor lead in LED light from LEDup's Light String.

LEDup Light Strings compared to US 11,533,794 claims 1, 2, 4, 8, 10, and 15

Claim	LEDup Light Strings
	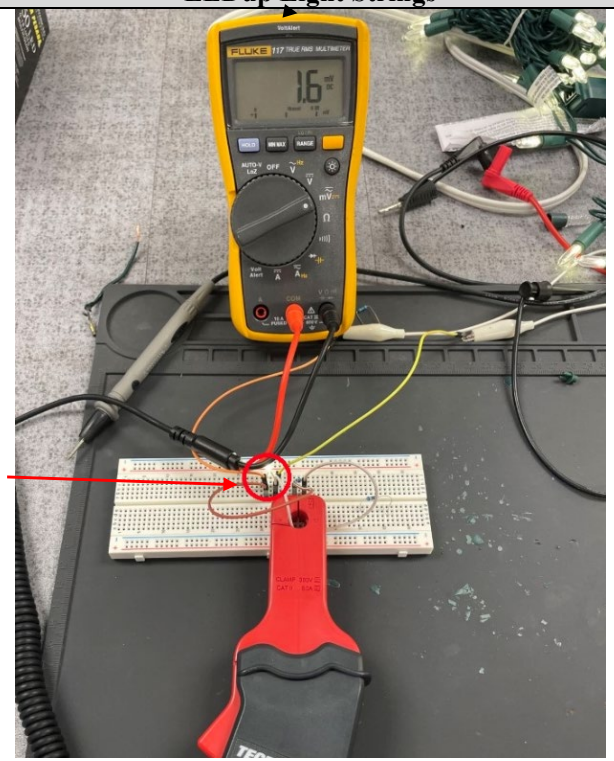
wherein the resistance of the bypass resistor is equal to or greater than the inherent resistance of the light source to which the resistor is attached.	Current of the entire light set decreases when a bulb is removed (or burns out), as evidenced by the statement below that LEDs continue to stay on even if a bulb burns out, is loose or is missing as mandated by ANSI/UL 588 marking regulations.

LEDup Light Strings compared to US 11,533,794 claims 1, 2, 4, 8, 10, and 15

Claim	LEDup Light Strings
	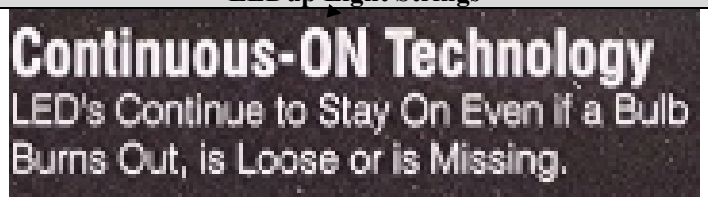 The resistance of the bypass resistor is equal to or greater than the inherent resistance of the light source to which the resistor is attached, as demonstrated by the reduction of the current draw of the lighting circuit as each bulb is removed from its socket. If the resistance of the bypass was lower than the light source, the current draw of the circuit would increase each time a bulb is removed.
15. A method of bypassing an LED light source, having a predetermined resistance to current flow, in a serially connected LED light string having at least one light source, the method comprising the steps of	LEDup's Light Strings contain a plurality of serially connected LED lights within an electrical circuit. See image below. The LED lights are connected in "series" because current flows from one light to the next in the circuit, and removal of a lamp holder with the LED and bypass resistor in it causes a number of bulbs to go out. The circuit contains a bypass resister that permits the LEDs to "continu[ously] stay on even if a bulb burns out, is loose or is missing. See image of prouct packaging below. The bypass resistor has a predetermined resistance to current flow.

LEDup Light Strings compared to US 11,533,794 claims 1, 2, 4, 8, 10, and 15

Claim	LEDup Light Strings
a. selecting a bypass resistor with the following characteristics:	The bypass resistor has the following characteristics described below in steps i.-iii.
i. a resistance greater than or equal to the predetermined resistance of said LED light source;	Current of the entire light set decreases when a bulb is removed (or burns out), as evidenced by the statement below that LEDs continue to stay on even if a bulb burns out, is loose or is missing as mandated by ANSI/UL 588 marking regulations.. 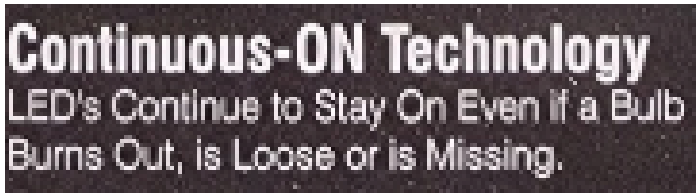 The resistance of the bypass resistor is equal to or greater than the inherent resistance of the light source to which the resistor is attached, as demonstrated by the reduction of the current draw of the lighting circuit as each bulb is removed from its socket. If the resistance of the bypass was lower than the light source, the current draw of the circuit would increase each time a bulb is removed.
ii. the ability to carry all of the current in the light string; and	The Light String set continues to operate when a bulb is removed or burnt out, which shows that it is able to carry all the current in the series string of lights
iii. the ability to operate at 100% duty cycle;	When power is supplied to the Light String, current passes through the bypass resistor at all times (100% duty cycle).
b. inserting said bypass resistor in parallel with said at least one LED light source.	The bypass resistor is “in parallel” to the current flowing to the LED light because the resistor circuit provides a second path for current to flow through. See image below from product packaging.

LEDup Light Strings compared to US 11,533,794 claims 1, 2, 4, 8, 10, and 15
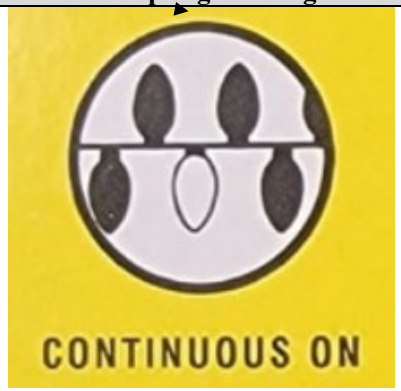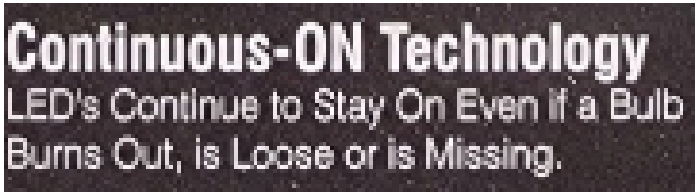
Claim	LEDup Light Strings