July 3, 1962 J. H. BLANCK 3,042,042

STOMACH PUMP

Filed March 14, 1958 2 Sheets-Sheet 1

FIG. 1.

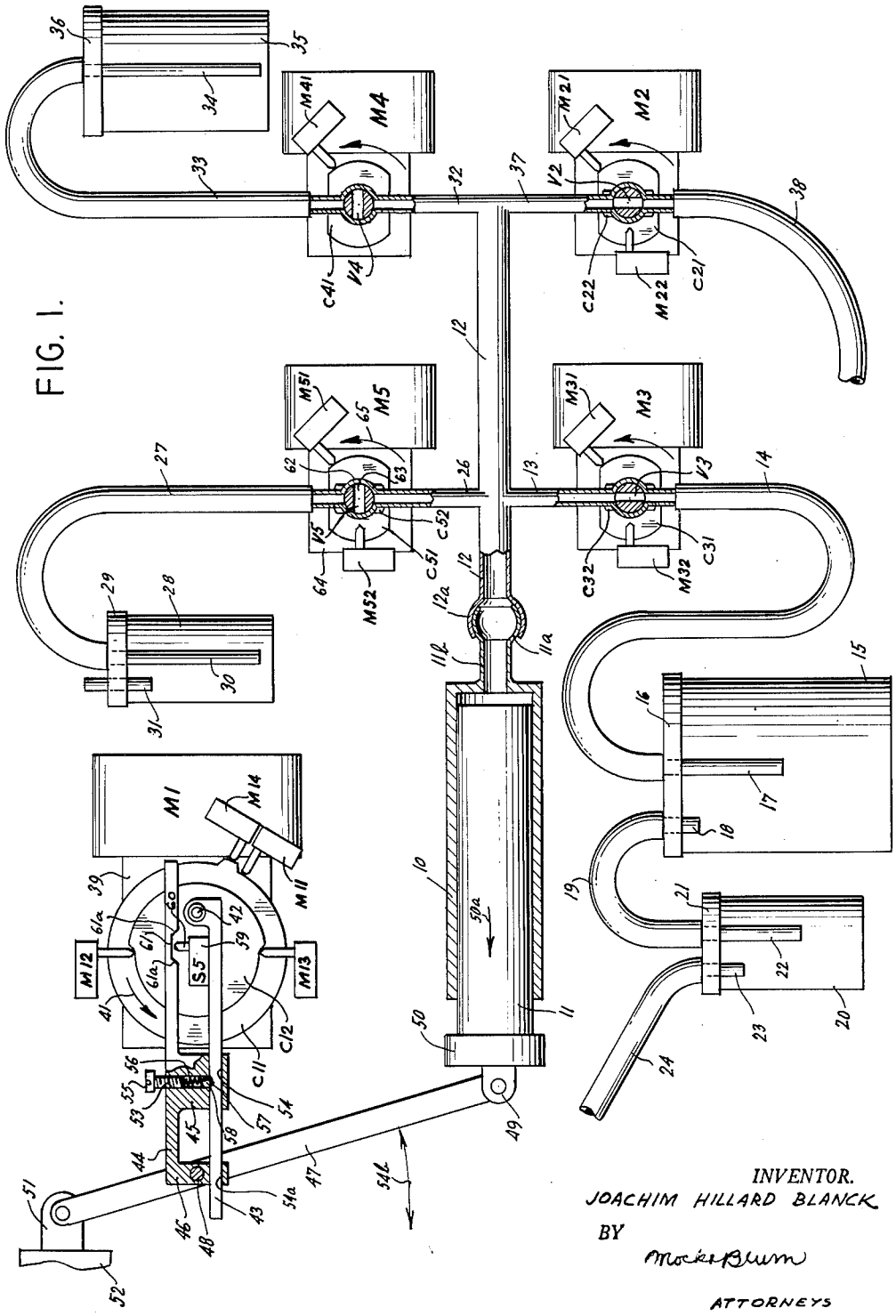

INVENTOR.
JOACHIM HILLARD BLANCK
BY
Mock & Blum
ATTORNEYS

STOMACH PUMP

Filed March 14, 1958 2 Sheets-Sheet 2

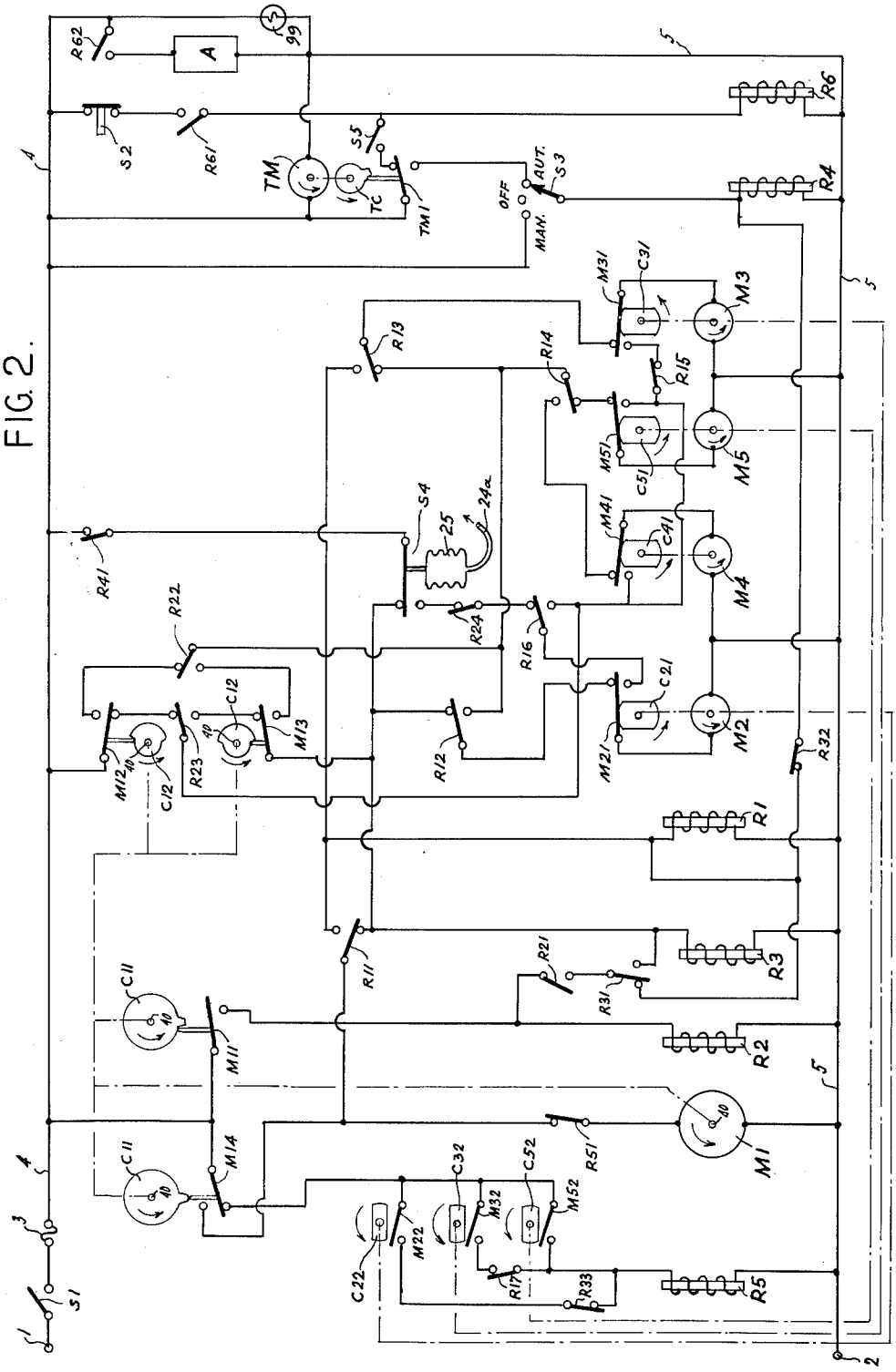

FIG. 2.

United States Patent Office

3,042,042

Patented July 3, 1962

1

3,042,042
STOMACH PUMP

Joachim Hillard Blanck, 152—30 Melbourne Ave., Flushing, N.Y.

Filed Mar. 14, 1958, Ser. No. 721,424
11 Claims. (Cl. 128—276)

This invention relates to improved apparatus for gastro-intestinal intubation and the like, such apparatus, in one application thereof, being familiarly known as a stomach pump. An important object of my invention is to provide automatic apparatus for applying suction to the stomach or to the interior of other organs, so as to withdraw fluid and particles suspended in the fluid therefrom.

As heretofore commonly practiced, a so-called stomach pump has actually consisted of apparatus maintained under partial vacuum and connecting with a flexible tube which may be inserted through the nose and into the stomach, so as to apply a mild suction to the stomach to withdraw contents thereof solely. It has been found undesirable to apply a pump directly to the stomach. At periodic intervals, it is necessary to restore the partial vacuum in the suction apparatus by means of a pump. Furthermore, at periodic intervals it is necessary to detach the stomach tube from the suction apparatus and connect it to a syringe which has previously been filled with a flushing fluid, and by manipulation of the syringe to flush out the tube.

Furthermore, the use of such apparatus has commonly required supervision by trained personnel such as nurses, to be certain that the stomach tube would not be obstructed during the suction operation.

While the above-described apparatus has been in widespread use, it has had the drawback of requiring constant supervision, as such stomach pumps are often operated for long periods of time; and it is desirable for the nurse to check the apparatus and flush the stomach tube approximately every half hour.

This requirement of constant supervision by trained personnel has rendered the use of stomach pumps costly, particularly when there has been a shortage of trained supervising personnel.

Another important object of this invention is to provide automatic stomach pumping apparatus such that the suction drainage of the stomach will automatically be interrupted when the pressure within the apparatus rises to a predetermined level, the air within the suction apparatus being then automatically pumped out until the pressure therein drops to a predetermined level, the drainage operation being then automatically renewed, and the whole drainage and pumping operation being automatically interrupted at predetermined intervals, at which time the stomach tube is flushed.

In one embodiment of my invention, I provide a syringe having the usual piston and opening upon the usual tube. This tube is connected through branch tubes and respective valves in said branch tubes to the atmosphere, to a suction reservoir for receiving stomach waste, and to a reservoir for flushing liquid and to the stomach tube. These valves are individually movable between open and closed positions. I provide two main controls for this apparatus. The first main control is operated by means of a timer and is coupled to the valves by appropriate auxiliary control means of electro-mechanical nature such that at predetermined time intervals the syringe piston is operated and the valves are regulated so as to permit a charge of flushing liquid to be drawn into the syringe from the flushing liquid reservoir and then evacuated into the stomach tube so as to flush the tube. The syringe piston is preferably manipulated so as to flush the stomach tube several times.

2

The other main control is preferably in the form of a so-called vacuum switch which is coupled to the suction apparatus and which is movable in response to the pressure therein between a first position corresponding to a preselected minimum value of the air pressure within the suction apparatus and a second position corresponding to a preselected maximum value of the pressure within the suction apparatus. This vacuum switch is also coupled to the valves and to the piston motor by means of further auxiliary control means of electro-mechanical nature. Furthermore, the first and second main control means are coupled together in such a way that the second control means can be operative only when the apparatus is not being flushed. When the second main control means is actuated, the valves are disposed in such a way as to permit suction to be applied to the stomach tube to exhaust waste therefrom into the suction reservoir, when the switch is in its second position. However, when the switch moves to its first position the suction operation is discontinued and the piston is actuated and the valves disposed so as to permit air to be pumped from the suction apparatus and exhausted to the outer atmosphere. When the switch moves back to its second position as the result of the evacuation of a sufficient amount of air from the suction apparatus, the pumping operation automatically ceases and the suction upon the stomach tube is automatically resumed.

Another important object of this invention is to provide auxiliary control means for the above-described apparatus, such that a new cycle or step of operations on the apparatus can only begin when the syringe piston is at the end of its discharge stroke.

Another important object of this invention is to provide means coupled to the piston drive means such as to provide an audibe or visible alarm if movement of the piston is impeded, as by obstruction in the stomach tube, during the flushing operation.

Another important object of this invention is to provide means coupling the motor output shaft to the piston such as to permit slippage of said coupling means if movement of the piston is obstructed while at the same time permitting the motor output shaft to continue to move relatively freely, and while at the same time permitting moderate force to be exerted upon the piston in an attempt to overcome the obstruction in the stomach tube.

As important features of my invention, the apparatus is automatic, requiring a minimum of supervision, is substantially fool-proof in operation and relatively simple in design and construction, despite the considerable number of operations performed thereby.

Other objects and advantages of my invention will become apparent from the following description, in conjunction with the annexed drawings, in which a preferred embodiment of the invention is disclosed.

In the drawings,

FIGS. 1 is an elevation, somewhat diagrammatic in nature, of one embodiment of the apparatus in accordance with this invention.

FIG. 2 is a schematic diagram of the electric circuit of the embodiment of FIG. 1.

FIG. 1 shows a generally conventional syringe **10** having the usual reciprocable piston **11** with head **50** and having a tube **11*b*** connecting with the end thereof. The movement of piston **11** in the direction of arrow **50*a*** and away from tube **11*b***, is defined as the intake stroke of piston **11**. The reverse movement of piston **11**, toward tube **11*b***, is defined as the discharge stroke of piston **11**. The end of tube **11*b*** remote from the main part of syringe **10** connects with main tube **12** by means of a

universal hollow ball and socket joint comprising the ball **11***a* of tube **11***b* and the socket **12***a* of main tube **12**.

Four tubes branch off from main tube **12**. Tube **13** connects through waste valve V3 with a flexible hose **14** which leads to a conventional waste reservoir **15**. This reservoir **15** has a cover **16** and a rigid inlet tube **17** which extends upwardly through cover **16** and connects with said hose **14**.

A further tube **18**, which is optionally shorter than tube **17**, also extends upwardly through an opening in cover **16** and connects with hose **19**. Said hose **19** extends to a safety trap jar **20**. This jar **20** has a cover **21** and has a tube **22** which extends upwardly through a suitable opening in cover **21** and connects with hose **19**. A further tube **23**, which is optionally shorter than tube **22**, also extends upwardly through an opening in cover **21** and connects with flexible hose **24**. Said hose **24**, as shown in FIG. 2, extends to the bellows **25** of a conventional vacuum switch assembly, this assembly also including a switch S4 which is controlled by said bellows **25**. FIG. 2 shows a switch S4 in its normal condition, corresponding to normal atmospheric pressure within bellows **25**. In the diagrammatic showing of FIG. 2, when a partial vacuum is created within bellows **25**, bellows **25** will contract and will move switch S4 to its second position.

Tube **12** also connects with exhaust tube **26**. Tube **26** connects through exhaust valve V5 with flexible hose **27** which leads to exhaust safety jar **28**. This jar **28** has a cover **29** and a tube **30** which extends upwardly through a suitable hole in cover **29** and connects with hose **27**. A further tube **31**, which is optionally shorter than tube **30**, extends upwardly through a further hole in cover **29** and is open to the atmosphere above jar **28**. Except for tube **31**, the entire system is intended to be substantially airtight.

Main tube **12** connects through branch tube **32** and flush valve V4 with flexible hose **33**. Hose **33** connects with tube **34** which extends downwardly into flush jar **35** through a suitable opening in the cover **36** thereof. Said cover **36** sits loosely upon jar **35**, so as to provide means for air access to the jar to replace the liquid contents thereof as they are drawn off. Jar **35** is intended to contain any saline solution or other appropriate solution for flushing out the stomach tube.

Finally, main tube **12** communicates with a fourth branch tube **37** which in turn communicates through stomach valve V2 with flexible stomach hose **38**. This hose **38** is any appropriate tube for insertion through the nose into the human stomach in a well-known manner.

Piston **11** is operated by means of an electric motor M1. Said motor M1 has an output gear box **39**. Said output gear box **39** has a right angle drive with an output shaft shown diagrammatically in FIG. 2 and designated by the reference numeral **40**. Cams C11 and C12 are fixedly mounted upon shaft **40** and are adapted to be turned by motor M1 in the direction of arrow **41**.

A further stub shaft **42** is mounted upon cam C12 and is off center relative thereto. An eccentric lever **43** is turnably mounted upon shaft **42**. A connecting rod member **44**, which is shown somewhat diagrammatically, is positioned above lever **43**. Said rod member **44** has spaced depending bosses **45** and **46** with respective appropriate alined through bores **54** and **54***a* through which rod **43** extends frictionally slidably. A further lever **47** is connected intermediate its ends, by means of lateral pivot **48**, to boss **46**. The lower end of lever **47** is connected by pivot means **49** to the rear head **50** of piston **11**. The upper end of rod **47** is connected by pivot means **51** to housing **52**. Said housing **52** is broken away and is not shown in detail.

A threaded recess **53** extends downwardly from the top face of rod **44** and extends downwardly to communicate with the bore **54** in boss **45** through which rod **43** is slidable.

A tensioning screw **55** is screwed downwardly into recess **53**. Spring **56** is located in recess **53** below the shank of screw **55** and ball **57** is inturn located in recess **53** below spring **46**. A notch **58** is formed in the upper face of rod **43** within bore **54** and ball **57** normally rides within this notch, being held therein by the force of spring **56**. Accordingly, rod member **44** and rod **43** normally move together as a unit, in the direction of arrow **54***b*, when piston **11** is reciprocateed by means of motor M1 and the eccentric rod **43**. If, for some reason, the movement of piston **11** is obstructed, thereby preventing movement of rod member **44**, the continued rotation of cam C12 causes rod **43** to move relatively to rod member **44**, unseating ball **57** from recess **58**. The housing **59** of switch S5 is mounted upon the upper face of rod **43**, adjacent pin **42**. The button **60** of switch S5 protrudes upwardly from housing **59**. Rod **44** has a recess **61** in its lower face, with inclined front and rear cam faces **61***a*. Normally, when ball **57** is seated within notch **58**, the upper end portion of button **60** is located within recess **61** and clears the cam faces **61***a* thereof.

When, as the result of the obstruction of piston **11**, rod **43** is moved in either direction relative to rod **44**, the appropriate cam face **61***a* almost immediately rides over switch button **60** and depresses it, thereby closing the normally open switch S5.

A valve is associated with each branch tube. For convenience, since all of the valves are of the same type, valve V5 in tube **26** will be described in detail. Valve V5 may be of any appropriate construction, such that it is readily movable between open and closed position. Optionally, and without limitation thereto, valve V5 is a rotary valve. Optionally, valve V5 is in the form of the well-known rotary stop cock and is accordingly of slightly tapered, generally cylindrical shape. As is conventional, said valve V5 extends transversely through an appropriate housing enlargement **62** of tube **26**, and is frictionally turnable therein.

Valve V5 has a through diametrical bore **63** which is shown in FIG. 1 at right angles to the bore of tube **26**. This corresponds to the closed position of valve V5. By turning valve V5 90° it may be moved to open position, such as the open position of valves V3 and V2 shown in FIG. 1.

The operation of valve V5 can be controlled by any suitable means. Optionally, and without limitation thereto, the operation of valve V5 is controlled by motor M5. Motor M5 has a gear housing **64** which has a right angle drive. The head of the stop cock of valve V5 is mounted upon the output shaft of gear box **64** by any suitable means (not shown). In addition, two cams C51 and C52 are also mounted upon the output shaft of gear box **64**, so that they turn in unison with valve V5.

Preferably, the movements of valve V5 are limited to 90° at a time, in order to move it precisely between fully open and fully closed position, such movement being optionally always in the direction of arrow **65**.

Cam C52 actuates switch M52, the housing of which is mounted upon gear housing **64**. Said switch M52 is normally open. As shown in FIG. 1, cam C52 has diametrically opposed cam surfaces.

Electric Circuit

This is shown schematically and diagrammatically in FIG. 2. FIG. 2 shows input terminals **1** and **2** connected across any suitable source of power (not shown), which is preferably 117 volts, alternating current. Terminal **1** connects through manual on-off switch S1 and fuse **3** with line **4**. Terminal **2** connects with line **5**.

I provide a series of relays having relay coils R1, R2, R3, R4, R5 and R6. Each relay includes a series of contacts, hereinafter referred to as relay switches, and designated with reference characters corresponding to the reference character of the associated relay coil.

Thus, relay switch R33 designates a pair of relay contacts corresponding to relay coil R3. The normal condition of each relay switch will be defined as its condition when its associated relay coil is not energized. All relay switches are shown in their normal condition in FIG. 2.

Relay coil R1 controls two-position relay switch R11, two-position relay switch R12, two-position relay switch R13, two-position relay switch R14, normally closed relay switch R15, two-position relay switch R16 and normally closed relay switch R17.

Relay coil R2 controls normally open relay switch R21, two-position relay switch R22, two-position relay switch R23 and normally closed relay switch R24.

Relay coil R3 controls two-position relay switch R31, normally closed relay switch R32 and normally closed relay switch R33.

Relay coil R4 controls normally closed relay switch R41.

Relay coil R5 controls normally closed relay switch R51.

Relay coil R6 controls normally open relay switch R61 and normally open relay switch R62.

FIG. 2 also shows diagrammatically the previously mentioned motors M1, M2, M3, M4 and M5 and shows the previously mentioned cams, these cams being shown for convenience of illustration as ganged to the output shafts of said motors, rather than mounted thereon. Thus, cam C21 is shown as ganged to motor M2. Said cams are shown in operative association with their previously described associated switches.

For convenience of illustration, cam C11 is shown twice, so as to simplify the showing of its associated switches M11 and M14. Similarly, cam C12 is shown twice, so as to simplify the showing of its associated switches M12 and M13.

The details of the circuit connections of the above-described circuit elements will be obvious from FIG. 2 and from the subsequent "Operation of the Electric Circuit," and accordingly further description thereof is omitted as unnecessary.

FIG. 2 also includes certain other circuit elements in association with relay coils R4 and R6 in particular. Switch S3 has an off position, a manual position and an automatic position, all designated in FIG. 2. In its manual position, switch S3 and relay coil R4 connect between lines 4 and 5. In the automatic position of switch S3, timer motor switch TM1 (in one position thereof), switch S3 and relay coil R4 connect between lines 4 and 5. Timer motor TM connects directly between lines 4 and 5 and turns timer cam TC. Once per revolution of timer cam TC, switch TM1 is moved by cam TC out of its normal position to position to energize relay coil R4.

Switch TM1 (in its normal position), previously described, and normally open switch S5 and relay coil R6 connect between lines 4 and 5, so that relay coil R6 is energized when switch S5 is closed, provided that switch TM1 is then in its normal position. Normally closed reset switch S2, normally open relay holding switch R61 and relay coil R6 connect between lines 4 and 5. Normally open relay switch R62 and electric alarm device A connect between lines 4 and 5. Pilot lamp 99 connects between lines 4 and 5.

Operation of the Electric Circuit

In describing the operation of the electric circuit, it will be assumed that the various switches and mechanical parts and other components are in their position of FIGS. 1 and 2. This represents the start of a cycle of operations of the apparatus. It will be noted that in this position, valves V2 and V3 are open, and it will be assumed that this represents the condition corresponding to the last use of the stomach tube 38. In this condition, tube 37, tube 12, tube 11*b* and tube 13 may contain a certain amount of liquid. It will also be assumed that the device has been out of use sufficiently long so that any vacuum in the waste reservoir 15 has been substantially dissipated.

The cycle of operations involves the following major stages:

(1) Utilization of a pumping action of piston 11 to create a partial vacuum in waste reservoir 15.

(2) With piston 11 now motionless, utilization of the created vacuum within waste reservoir 15 to withdraw liquid from the stomach through tube 38.

(3) Intermittently, through operation of piston 11, use of the solution within reservoir 35 to flush stomach tube 38.

Creation of Partial Vacuum

This stage includes the preliminary step of clearing the tubes of any liquid left over from previous operation of the apparatus, prior to the main step of actually creating the partial vacuum within waste reservoir 15.

Preliminary Clearing Step

Initially, vacuum switch S4 is in its so-called "low" position shown in FIG. 2, corresponding to no vacuum or slight vacuum in reservoir 15. Initially, the circuit of motor M1 cannot be completed through switch M14 because this switch is initially depressed by cam C11.

To start the mechanism, switch S1 is closed manually, energizing lines 4 and 5. A circuit is completed from line 4, through relay switch R41, vacuum switch S4, relay switch R11, relay switch R51 and motor M1, to line 5, so that motor M1 is energized. This causes piston 11 to begin its outward stroke.

Simultaneously, with the energization of motor M1 as the result of the closing of switch S1, current flows from line 4, through relay switch R41, vacuum switch S4 and relay coil R3, to line 5, thereby energizing relay coil R3. This causes its associated relay switches R31, R32, and R33 to move to their second positions. The effect of this upon the operation of the circuit will later be described in detail, it being sufficient merely to point out at this point that the energization of relay coil R3 prevents the vacuum-creating operation from being interrupted by a flushing operation, and also prevents operation of a portion of a safety interlock system to be described in detail below.

In addition, upon the initial closing of switch S1, current flows from line 4, through relay switch R41, vacuum switch S4, relay switch R12, switch M21 and motor M2 to line 5. As a result, motor M2 is activated and valve V2 is turned 90° to closed position, thereby closing off stomach tube 38. In addition, cam C21 turns 90°. At the conclusion of the turning movement of cam C21, motor switch M21 moves to its second position in which motor M2 is out of circuit, thereby preventing further movement of valve V2. Also, at the conclusion of this movement of valve V2, cam C22 causes closing of switch M22. However, as the result of energization of relay coil R3, relay switch R33 is open, and interlock relay coil R5 cannot be energized at this time.

Almost immediately after the closing of switch S1 and as the result of the energization of motor M1 and turning of cam C12, switch M12 is moved to its second position. This position of switch M12 is maintained substantially during the entire outward stroke of piston 11. In this position, a further circuit is completed from line 4, through switch M12, relay switch R22, relay switch R13, switch M31 and motor M3, to line 5, thereby energizing motor M3. This causes valve V3 to move to closed position.

At the conclusion of the 90° angular movement of valve V3, cam C31 permits switch M31 to move to its second position. This opens the circuit of motor M3. In addition, at the conclusion of the 90° angular movement of valve V3, switch M32 is closed by cam C32. However, as soon as the cycle of operations begins, cam C11 clears switch M14 and permits switch M14 to move to its second

position. Accordingly, even though switch M32 is closed, the circuit of interlock relay R5 remains inactive.

Also, as the result of the movement of switch M12 to its second position, a further circuit is completed from line 4, through switch M12, relay switch R22, relay switch R14, switch M51 and exhaust motor M5 to line 5. This causes valve V5 to turn 90° to open position, the movement ceasing when cam C51 turns to permit switch M51 to move to its second position, thereby deenergizing motor M5. Cam C52 closes switch M52, which has no effect upon the operation at this time for the reason stated in the preceding paragraph (switch M14 having moved to its second position).

During the outward movement of piston 11, air is drawn in from the atmosphere, through tube 27 and open valve V5, into pump cylinder 10. At the outermost limit of the stroke of piston 11, switch M12 returns to its first position, and at this instant switch M13 remains in its first position. With switch M12 back in its first position, a circuit is created from line 4, through switch M12, relay switch R23, relay switch R15, switch M31 (which is in its second position) and motor M3 to line 5.

As a result, valve V3 is opened and cam C31 returns switch M31 to its first position. In this position, motor M3 is deenergized. At the same instant a further circuit is closed from line 4 through switch M12, relay switch R23, switch M51 and motor M5 to line 5, thereby energizing motor M5. Hence, exhaust valve V5 is closed, and cam C51 returns switch M51 to its first position of FIG. 2 in which motor M5 is deenergized.

With exhaust valve V5 closed and valve V3 opened, the inward movement of piston 11 forces the air of cylinder 10 into waste reservoir 15, via line 13, valve V3 and lines 14 and 17, thereby clearing said lines of liquid and sediment.

Immediately after the beginning of the inward movement of piston 11, cam C12 moves switch M13 to its second position. However, this has no effect on the operation of the apparatus at this time.

Just before the completion of the inward stroke of piston 11, cam C11 moves switch M11 to its second position. This completes a circuit between lines 4 and 5, through switch M11 and relay coil R2. Relay coil switch R31 having already been moved to its second position as the result of the energization of relay coil R3, the relay switch R21 being now moved to its closed position, a circuit is closed from line 4, through relay switch R41, vacuum switch S4, relay switch R31, relay switch R21 and relay coil R2, to line 5. As a result, relay coil R2 now remains energized independently of switch M11 as long as relay coil R3 remains energized (or in other words, as long as switch S4 remains in its low position).

At the end of the inward stroke of piston 11, switch M11 opens and switch M14 is moved to its first position, shown in FIG. 2. However, this movement of switch M14 has no effect at this time on the operation of the interlock circuit, because even though switch M22 is closed, relay switch R33 is open, and switches M32 and M52 are open, so that interlock relay coil R5 cannot be energized. This means that relay switch R51 remains closed and the operation of motor M1 is not interrupted at the conclusion of the first or clearing cycle of the pump.

Main Vacuum Cycle

At the conclusion of the first cycle, switch M13 returns to its first position, as shown in FIGS. 1 and 2. Piston 11 now proceeds to move in its second outward stroke, valve V3 remaining open and valve V5 remaining closed; and air is drawn from waste reservoir 11 through valve V3, into pump cylinder 10. Although switch M12 is moved to its second position, it is no longer in circuit as the result of the energization of relay R2 and the movement of relay switches R22 and R23 to their second positions. The movement of switch M14 to its second position has no effect at this time upon operation of the apparatus, because the circuit of motor M1 is still completed through vacuum switch S4.

At the conclusion of the outward stroke of piston 11, it begins to move inwardly and moves switch M13 to its second position. As a result, a circuit is completed from line 4, through relay switch R41, vacuum switch S4, switch M13, relay switch R22, relay switch R14, switch M51 and motor M5 to line 5. Also, a further circuit is simultaneously completed from line 4, through relay switch R41, vacuum switch S4, switch M13, relay switch R22, relay switch R13, switch M31, and motor M3, to line 5.

Accordingly, as described in conjunction with the first cycle, motors M3 and M5 are energized, and valve V3 is closed and valve V5 is opened. Accordingly, during the inward stroke of piston 11, the air in cylinder 10 is exhausted through valve V5 and exhaust jar 28 to the atmosphere.

At the conclusion of the inward stroke of piston 11, switches M12 and M13 return to their positions shown in FIG. 2. As a result, a circuit is completed from line 4 through relay switch R41, vacuum switch S4, switch M13, relay switch R23, and through both switch M51 and motor M5 and also relay switch R15, switch M31 and motor M3, to line 5.

This causes the two motors to be energized and closes valve V5 and opens valve V3. At the conclusion of the cycle, switch M14 returns to its position of FIG. 2.

In this cycle, the momentary closing of switch M11 has no effect on the operation of the circuit because relay coil R2 is independently energized.

Interlock Circuit

Assuming the motor M3 and M5 have completed the operation of closing valve V5 and opening valve V3, switches M32 and M52 will be open as shown in FIG. 2, and relay R5 will not be energized. If, for example, however, valve V3 is not yet quite open, switch M32 will still be closed, and a circuit will be completed from line 4, through switch M14, switch M32, relay switch R17 and relay coil R5 to line 5. Similarly, the circuit of relay coil R5 will be closed if switch M52 is still closed. In either event, if relay R5 is thus energized relay switch R51 is opened and the circuit of motor M1 is opened. Accordingly, safety means have been provided whereby at the conclusion of the inward stroke of piston 11, motor M1 will stop, if necessary, to permit the completion of the movement of valves V3 and V5 to their position of FIG. 1. As soon as such movements are completed, relay R5 will automatically be deenergized and motor M1 will operate again.

As long as switch S4 remains in the position of FIG. 2, the last-described cycle of piston 11 is repeated, and the valves V3 and V5 change positions as described immediately above.

Stomach Clearing Stage

Finally, during a particular outward stroke of piston 11, switch S4 is moved to its "high" position. However, motor M1 continues to be energized via switch M14.

At the end of this particular cycle, switch M14 is moved to its first position shown in FIG. 2. Motor M1 is thereby deenergized. With switch S4 now moved out of its low position, relay coil R3 is deenergized and this causes relay coil R2 to become deenergized. As a result, a circuit is closed from line 4, through relay switch R41, vacuum switch S4, the again closed relay switch R24, relay switch R16, switch M21 and motor M2, to line 5.

This causes the energization of motor M2 and stomach valve V2 is opened. Also, a circuit is completed from line 4 through switch M12, relay switch R23 (this having returned to its position of FIG. 2), switch M51 and motor M5 to line 5, and also via relay switch R15, switch M31 and motor M3 to line 5. As a result, valve V5 is closed and valve V3 is opened. This completes a line from tube 38 to waste reservoir 15.

The apparatus now assumes the steady state operating condition as shown in FIGS. 1 and 2, with the exception that vacuum switch S4 is in its high position. Tube 38 now withdraws the contents from the stomach, as the pletes a line from tube 38 to waste reservoir 15.

In the event that the vacuum should drop below the predetermined level, so that vacuum switch S4 returns to its "low" position, the stomach clearing stage is interrupted, and the vacuum creating cycle is repeated. It will be apparent that with switch S4 back in its "low" position, the identical circuit conditions exist as existed at the start of the first cycle of operation of the pump described above, and the entire vacuum stage as described above is repeated. The stomach clearing stage is then resumed.

Flushing Operation

In describing the flushing operation, it will first be assumed that the vacuum switch S4 is still in its "high" position, so that the pump is inactive. As shown in FIG. 2, when switch S1 is closed, current flows from line 4, through timer motor TM, to line 5. At the conclusion of an arbitrarily selected time interval which may, for example, be thirty minutes, timer cam TC, which is directly coupled to timer motor TM, moves timer switch TM1 to its second position. In this position, with selector switch S3 in its automatic position shown in FIG. 2, a circuit is completed from line 4, through switch TM1, switch S3 and relay coil R4, to line 5, thereby energizing relay coil R4. This causes relay switch R41 to open and thereby interrupts the circuit of vacuum switch S4.

This insures that the flushing operation will not be interrupted and that the vacuum creating stage cannot begin during the flush cycle, even if the vacuum in reservoir 15 should happen to become low enough so that vacuum switch S4 moves back to its low position.

Also as the result of the closing of switch TM1, a circuit is completed from line 4, through switch TM1, switch S3, relay switch R32 and relay coil R1, to line 5. This causes relay coil R1 to be energized, and causes its associated relay switches to assume their second positions.

Also, a circuit is completed from line 4, through switch TM1, switch S3, relay switch R32, relay switch R11, relay switch R51 and motor M1, to line 5. This causes the operation of motor M1 for the first cycle of operations of the pump in the flushing operation. Accordingly, piston 11 begins its outward stroke.

At the beginning of the cycle, a circuit is also closed from line 4, through switch TM1, switch S3, relay switch R32, relay switch R13, switch M31 and motor M3, to line 5. This causes reservoir valve V3 to close, in the manner previously described. Although this causes switch M32 to close, relay coil R5 cannot be energized because relay switch R17 has been opened.

Next in the cycle, cam C12 moves switch M12 to its second position. As a result, a circuit is completed from line 4 through switch M12, relay switch R22, relay switch R12, switch M21 and motor M2, to line 5. This causes valve V2 to be turned 90° to closed position, motor M2 being energized when cam C21 moves to permit switch M21 to move to its second position. Since switch M14 has moved to its second position, the resulting closing of switch M22 by cam C22 does not result in energization of the interlock relay coil R5.

A further circuit is also completed from line 4, through switch M12, relay switch R22, relay switch R14, switch M41 and motor M4, to line 5. This results in the opening of valve V4, the movement thereof ceasing when motor M4 is deenergized as the result of the turning of cam C41 sufficiently to permit switch M41 to move to its second position. Accordingly, during the outward movement of piston 11, a predetermined quantity of flush liquid is drawn from reservoir 35 into cylinder 10.

At the outermost stroke of piston 11, switches M12 and M13 assume their positions of FIG. 2. A circuit is completed through switch M12, relay switch R23, relay switch R16, switch M21 and motor M2, to line 5. This results in the opening of stomach valve V2. At the same time, a further circuit is completed from line 4, through switch M12, relay switch R23, switch M41 and motor M4, to line 5. Accordingly, flush liquid valve V4 is closed.

During the inward movement of piston 11, flush liquid is forced from cylinder 10, through tube 12, valve V2 and tube 38 to the stomach. As a result, any obstruction in tube 38 is dislodged. Also, any accumulation of sediment, viscous material or the like which might tend to completely obstruct the tube is cleared out. During the inward movement of piston 11, switch M13 is moved to its second position. However, this has no effect upon the operation of the circuit.

Just before the end of the cycle, switch M11 is momentarily closed by cam C11. This causes the energization of relay coil R2. As a result, a circuit is closed from line 4, through switch TM1, switch S3, relay switch R32, relay switch R31, relay switch R21 (which has been closed as the result of the energization of relay coil R2) and relay coil R2, to line 5. Accordingly, relay coil R2 remains energized even after switch M11 again opens. As long as relay coil R2 is energized (relay coil R3 being out of circuit), none of the motors M2, M3, M4 and M5 can be energized.

During the continued operation of motor M1, the movement of piston 11 causes the flush medium to pass alternately into the stomach and back into cylinder 10, thereby flushing out tube 38 a number of times.

At the end of a predetermined time interval, for example, sufficient to allow stomach tube 38 to be flushed six times, timer cam TC and timer switch TM1 return to their starting positions of FIG. 2. Relay coils R2 and R4 are thereby deenergized. The flushing operation, however, continues until the end of the cycle. It is noted that relay coil R1 is held in circuit by relay switch R11 and switch M14. At the end of the cycle, switch M14 is opened, deenergizing relay coil R1 and causing motor M1 to stop.

Since switch M12 is in the position shown in FIG. 2, a circuit is completed from line 4, through switch M12, relay switch R23 (which has now returned to its first position), relay switch R15, switch M31 and motor M3 to line 5. As a result, valve V3 is opened. Accordingly, stomach tube 38 and waste reservoir 15 are again interconnected and the draining of the stomach is resumed.

It will be apparent that the flush cycle can be initiated at will by moving switch S3 to the manual position, wherein relay coil R4 is energized regardless of the position of switch TM1.

It is possible that when switch TM1 is closed, switch S4 may be in its low position. As a result of the energization of relay coil R4, the circuit of switch S4 is immediately interrupted. However, just as would be the case if switch S4 had moved to its high position, the vacuum creating cycle will continue until piston 11 returns to its innermost position, and switch M14 is moved to its second position. However, at the conclusion of the flushing operation, the vacuum creating stage will be resumed where it left off.

Overload System

Conceivably, during the flushing cycle, an obstruction in tube 38 may resist the movement of piston 11. This causes overload switch S5 to be closed, in a manner previously described. If switch TM1 is in its second position, switch S5 will remain out of circuit, and the apparatus will attempt to dislodge the obstruction during the predetermined cycle, by repeated inward and outward movements of piston 11. If the obstruction is removed during the cycle, switch S5 will return to its open position and the alarm system will be inactive.

On the other hand, if the obstruction is still present and switch S5 is still closed at the end of the flushing cycle, a circuit will be completed from line 4, through switch TM1, switch S5 and overload relay coil R6, to line 5. This causes the closing of relay switch R61, locking relay coil R6 in circuit. Also, relay switch R62 is closed, and alarm system A is energized. A nurse or other personnel summoned by the alarm may then clear the obstruction, so that switch S5 assumes its normally open position. Accordingly, by pressing reset switch button S2, relay coil R6 is deenergized and the alarm system A is deenergized.

Alarm system A may be of any suitable type and may include any suitable visual or auditory indicating means.

In the event of an obstruction to the movement of piston 11 during the vacuum creating stage, the closing of switch S5 immediately actuates the alarm system. Even if timer cam TC should happen to move switch TM1 to its second position, the alarm system will continue to be energized as the result of the locking in of relay coil R6.

It will be apparent from the foregoing that various modifications may be made in the invention without departing from the scope and spirit thereof. For example, the structure of the various valves V5, V2, V3 and V4, and the means for operating same, may be varied considerably. Means other than the cam operated switches M31, M32, M21, M22, M51, M52 and M41 may be employed for indicating the opened and closed positions of the various valves. The specific arrangement of the tubing may be varied somewhat. Other changes are possible.

Regardless of the various changes that can be made, however, it is essential to my invention to employ a drainage tube, such as tube 38, or means adapted to connect with such a tube, fore form of suction means for tube 38, in order to exhaust the contents of the stomach in a gentle manner, and some form of pump means for exhausting air from the suction means. In the disclosed embodiment, the reservoir 15 and reservoir 20 and associated parts, including tube 14, serve as the suction means; and the syringe consisting of piston 11 and cylinder 10, together with valve V5 and associated tubing, serve as the pump.

It is also preferable to provide actuating means for the suction means which are responsive to the internal pressure thereof, and such actuating means can optionally take the form of the bellows 25 and associated parts. It is also preferable to provide control means operatively coupled to said actuating means and also to said suction means and said pump means, so as to permit operation only of the pump means upon reduction of the pressure in the suction means, to a selected minimum value during operation of the suction means and to permit operation only of the suction means upon increase of the pressure in the suction means to a selected maximum value during operation of the pump means.

In the flushing operation, it is necessary to employ means for alternately sending flushing liquid into tube 38 and for withdrawing the flushing liquid from tube 38, and such flushing means can optionally consist of the same piston 11 and cylinder 10 of the syringe which serve as part of the pumping means. Said flushing means must be normally inactive and means must be provided for making such flushing means active, and which may take the form of a manual switch or of an automatically and intermittently closed switch. Of course, when the automatic flushing system is employed, the pump means and the suction means must respectively be inactive when the flushing means is active.

While the use of the slippage linkage between piston 11 and the output of the motor, together with the alarm system including switch 55, is optional, they are highly preferred since they greatly increase the safety and dependability of the apparatus as a whole.

While I have disclosed a preferred embodiment of the invention, and have indicated various changes, omissions and additions which may be made therein, it will be apparent that various other changes, omissions and additions may be made therein, without departing from the scope and spirit thereof.

For example, the circuit may readily be modified so that at the end of the flushing operation, with valve V3 open and valve V2 closed, the final inward stroke of piston 11 will discharge the flushing liquid into reservoir 15.

Also, an alarm can be provided to be actuated if for some reason the flushing cycle or any other cycle continues for too long a time.

Also, the tubes can be made of flexible plastic, such as polyvinyl chloride. In fact, the syringe can be replaced by a modified syringe in the form of a roller reciprocating upon a casing of flexible plastic, such as polyvinyl chloride. In the event that the tubes are made of flexible plastic, the valves can be in the form of pinch clamps. In this way, the unit consisting of these elements can be made disposable.

Various other changes can be made.

I claim:

1. Intubation apparatus comprising a syringe having a casing with an end opening and a piston movably located in said casing for reciprocation away from said syringe end opening in an intake stroke and toward said syringe end opening in a discharge stroke, an electric motor, means coupling said electric motor to said piston, a main conduit connecting with said casing at said syringe end opening, an atmosphere tube connecting at one end thereof with the atmosphere and at the other end thereof with said conduit, a reservoir for storage of flushing liquid, a flushing tube connecting between said reservoir and said conduit, an aspirating tube connected to said conduit and adapted to be inserted in the stomach and the like, suction means, a suction tube connecting between said suction means and said conduit, each of said tubes having an on-off valve associated therewith, each of said valves having independent valve operating means associated therewith, means including electric switches for indicating the positions of said piston respectively at the end of its discharge stroke, during its intake stroke, at the end of its intake stroke and during its discharge stroke, further means including further electric switches for indicating the respective on and off conditions of each of said valves, pressure-indicating means including a still further electric switch operatively associated with said suction means and adapted to indicate a selected maximum pressure within said suction means and a selected minimum pressure within said suction means, actuating means for said electric motor and for said valve operating means, and automatic electric control means including said electric switches for said actuating means, said control means comprising first means operative upon fall of said pressure to said minimum value to open the suction tube valve and the aspirating tube valve and close the other valves and render said motor inactive with said piston at the end of its discharge stroke, said suction means being then operative to suck material from said stomach and the like, second means operative upon rise of said pressure to said maximum value first to close said aspirating tube valve and said suction tube valve and open said atmosphere tube valve and render said motor active and secondly at the conclusion of the first intake stroke of said piston to close said atmosphere tube valve and open said suction tube valve so as to blow air through said suction tube during the first discharge stroke of said piston and thirdly at the conclusion of the second intake stroke of said piston to alternately close said suction tube valve and open said atmosphere tube valve at the conclusion of piston intake strokes and open said suction tube valve and close said atmosphere tube valve at the conclusion of discharge

strokes of said piston, whereby to evacuate air from said suction means and reduce the pressure therein to said minimum value, and third means including a timer for periodically interrupting the first and second control means for a selected interval of time and operative during said selected period of time first to open said reservoir valve and close the other valves and render said motor active for reciprocation of said piston starting with a first intake stroke thereof whereby to draw a charge of flushing liquid into said casing and secondly to close said reservoir tube valve and open said aspirating tube valve, whereby alternately to flush the stomach and withdraw the flushing liquid from the stomach, and thirdly at the end of the last intake stroke of said piston during said selected time interval to close said aspirating tube valve and open said suction tube valve so as to discharge the flushing liquid into said suction means and fourthly at the conclusion of the last discharge stroke of said piston during said selected time interval to restore said motor and said valves to their appropriate condition corresponding to cessation of the flushing operation and to the then existing pressure within said suction means.

2. Controls for intubation equipment, said intubation equipment including a tube for insertion in the stomach and the like, suction means connected to said tube for slowly withdrawing material from said stomach, pump means connected to said suction means for evacuating same, and syringe means connected to said tube for alternately supplying flushing liquid contained in said syringe means to said tube in a discharge stroke of said syringe means and withdrawing liquid from said tube in an intake stroke of said syringe means, said controls comprising pressure-sensitive indicating means coupled to said suction means and operative to indicate a selected maximum pressure and a selected minimum pressure within said suction means, first automatic coupling means including said pressure-sensitive means adapted and operative to couple said pump means to said suction means when said pressure reaches said selected maximum and adapted and operative to couple said suction means to said tube when said pressure reaches said selected minimum, the coupling of said suction means to said tube and of said pump means to said suction means being mutually exclusive, a timer, second automatic coupling means including said timer adapted and operative to couple said syringe means to said tube at selected time intervals for selected periods of time and for at the same time rendering said first automatic coupling means inactive, automatic means for operting said pump means only when said pump means are coupled to said suction means, and automatic means for operating said syringe means only when said syringe means are coupled to said tube.

3. Intubation apparatus comprising a pump, means actuating said pump, a drainage tube, a collecting bottle, a reservoir for flushing liquid, normally inactive means for first withdrawing a charge of flushing liquid from said reservoir and then alternately sending said flushing liquid into said tube and withdrawing said flushing liquid from said tube, first control means activating said flushing means, vacuum-responsive means coupled to said collecting bottle and movable between a first position corresponding to a selected high value of pressure within said bottle and a second position corresponding to a selected low value of pressure within said bottle, second control means, including said first control means, coupling said vacuum-responsive means and said actuating means for operation of said pump when said vacuum-responsive means is in its first position and when said flushing means is inactive and for inaction of said pump when said vacuum-responsive means is in its second position, means coupled to said vacuum-responsive means and to said first control means connecting said pump to said collecting bottle when said vacuum-responsive means is in said first position and when said flushing means is inactive for evacuation of said collecting bottle until said vacuum-responsive means moves to said second position, and further means coupled to said first control means and to said vacuum-responsive means connecting said drainage tube to said collection bottle when said flushing means is inactive and said vacuum-responsive means is in said second position, said collection bottle thereby sucking liquid through said drainage tube and into said collection bottle when said drainage tube is immersed in said liquid.

4. Apparatus according to claim 3, said first control means including a control switch and means periodically closing said switch for a selected time interval.

5. Intubation apparatus comprising a drainage tube, means applying suction to said tube, pump means exhausting said suction means and including a piston having a suction stroke and a return stroke, a reservoir for flushing liquid, normally inactive means, including said pump means, operable to first withdraw flushing liquid from said reservoir and then to alternately force flushing liquid into said tube and withdraw flushing liquid from said tube, first control means operable, when periodically activated, to activate said normally inactive means, second control means operable, responsive to a decrease in the vacuum in said suction means, to activate said pump means to exhaust said suction means until a pre-set higher vacuum is re-established therein, and interlock means effective during operation of said second control means to render said first control means ineffective to initiate activation of said normally inactive means when said piston is in a position other than the end of said return stroke.

6. Intubation apparatus as claimed in claim 5 in which said first control means includes interlock means effective, after initiation of activation of said normally inactive means, to render said second control means inoperable during activation of said normally inactive means.

7. For use with intubation apparatus of the type comprising a drainage tube and a suction device normally connected to said drainage tube for intubation; the improvement comprising pump means, a reservoir for flushing liquid, first valve means interconnecting said pump means and said reservoir, second valve means interconnecting said pump means and said drainage tube, interlock means operatively coupled to said valve means and operable, when active, first to open said first valve means and close said second valve means and establish communication for a first time interval through said first valve means between said pump means and said reservoir and then to close said second valve means and open said first valve means and establish communication for a second time interval through said second valve means between said pump means and said tube, said pump means being operable during said first time interval to withdraw a charge of flushing liquid from said reservoir, said pump means being operable during said second time interval to alternately force said charge of flushing liquid through said tube and withdraw said charge of flushing liquid from said tube, and automatic control means operatively coupled to said interlock means and operable to activate said interlock means.

8. The improvement defined in claim 7 in which said control means comprises a timer connected to said interlock means.

9. The improvement defined in claim 7 including driving means for said pump means, and slip clutch means interconnecting said driving means and said pump means and effective, upon occurrence of an obstruction in the drainage tube, to disestablish effective driving connection between said driving means and said pump means.

10. Intubation apparatus comprising a drainage tube, suction means, pump means, a reservoir for flushing liquid, first valve means interconnecting said suction means and said tube, second valve means interconnecting said pump means and said reservoir, third valve means interconnecting said pump means and said drainage tube, interlock means operatively coupled to said valve means and operable, when active, first to open said valve means

and close said second and third valve means and establish communication for a first time interval through said first valve means between said suction means and said drainage tube and then to open said second valve means and close said first and third valve means and establish communication for a second time interval through said second valve means between said pump means and said reservoir and then to open said third valve means and close said first and second valve means and establish communication for a third time interval through said third valve means between said pump means and said tube, said suction means being operable during said first time interval to suck contents from said drainage tube, said pump means being operable during said second time interval to withdraw a charge of flushing liquid from said reservoir, said pump means being operable during said third time interval to alternately force said charge of flushing liquid through said tube and withdraw said charge of flushing liquid from said tube, and control means operatively coupled to said interlock means and operable to activate said interlock means.

11. Intubation apparatus in accordance with claim 10 in which said control means comprises a timer connected to said interlock means.

References Cited in the file of this patent

UNITED STATES PATENTS

871,110	Comings	Nov. 19, 1907
1,010,334	Wieck et al.	Nov. 28, 1911
1,209,846	Kells	Dec. 26, 1916
1,624,784	Fraser	Apr. 12, 1927
1,817,052	Wood	Aug. 4, 1931
1,865,290	Vaughn	June 28, 1932
2,351,828	Marsh	June 20, 1944
2,441,980	Steigerwald	May 25, 1948

FOREIGN PATENTS

533,666	France	Dec. 19, 1921
187,229	Austria	Oct. 25, 1956

UNITED STATES PATENT OFFICE

CERTIFICATE OF CORRECTION

Patent No. 3,042,042 July 3, 1962

Joachim Hillard Blanck

It is hereby certified that error appears in the above numbered patent requiring correction and that the said Letters Patent should read as corrected below.

Column 14, line 47, for "close said second valve means and open" read -- open said second valve means and close --.

Signed and sealed this 14th day of January 1964.

(SEAL)
Attest:

ERNEST W. SWIDER
Attesting Officer

EDWIN L. REYNOLDS
Acting Commissioner of Patents