Trials@uspto.gov
Tel: 571-272-7822

Paper 34
Entered: March 10, 2023

UNITED STATES PATENT AND TRADEMARK OFFICE

BEFORE THE PATENT TRIAL AND APPEAL BOARD

PENUMBRA, INC.,
Petitioner,

v.

RAPIDPULSE, INC.,
Patent Owner.

IPR2021-01466
Patent 10,531,883 B1

Before JASON W. MELVIN, DAVID COTTA, and JAMIE T. WISZ, *Administrative Patent Judges.*

WISZ, *Administrative Patent Judge*.

JUDGMENT
Final Written Decision
Determining All Claims Unpatentable
35 U.S.C. § 318(a)

RapidPulse, Inc.
Exhibit 2007
Penumbra v. RapidPulse
IPR2024-01261
Ex. 2007-001

I. INTRODUCTION

A. BACKGROUND

Penumbra, Inc. ("Petitioner") filed a Petition (Paper 2, "Pet.") requesting an *inter partes* review of claims 1–18 of U.S. Patent No. 10,531,883 B1 (Ex. 1001, "the '883 patent"). Petitioner supported its Petition with the Declarations of Brian Brown and Ian Ross, MD (Exs. 1005, 1023). RapidPulse, Inc. ("Patent Owner") filed a Preliminary Response (Paper 6, "Prelim. Resp.") along with the Declarations of Ender Finol, PhD, and Michael Chen, MD (Exs. 2001, 2003). Upon consideration of the Petition, the Preliminary Response, and the preliminary evidence of record, we determined that Petitioner had demonstrated a reasonable likelihood that it would prevail with respect to at least one of the challenged claims of the '883 patent (Paper 7, "Institution Decision" or "Inst. Dec."). Thus, we instituted review with respect to all of the challenged claims.

Patent Owner filed a Patent Owner's Response (Paper 14, "PO Resp.") with additional Declarations from Dr. Finol and Dr. Chen (Exs. 2014, 2015). Petitioner filed a Reply (Paper 22, "Pet. Reply"), supported by the Supplemental Declaration of Brian Brown (Ex. 1030). Patent Owner filed a Sur-Reply (Paper 27, "PO Sur-Reply").

An oral hearing was held on December 14, 2022, and a transcript of the hearing is included in the record (Paper 33, "Tr.").

We have jurisdiction under 35 U.S.C. § 6. After considering the parties' arguments and supporting evidence, we conclude that Petitioner has proven by a preponderance of the evidence that claims 1–18 of the '883 patent are unpatentable. 35 U.S.C. § 316(e).

B. Real Parties-in-Interest

Petitioner identifies Penumbra, Inc. as the real party-in-interest. Pet. 1. Patent Owner identities RapidPulse, Inc. as the real party-in-interest. Paper 4, 1.

C. Related Proceedings

The parties do not identify any other proceedings involving the '883 patent.

D. The '883 Patent

The '883 patent, titled "Aspiration Thrombectomy System and Methods for Thrombus Removal with Aspiration Catheter," is directed to an aspiration thrombectomy system that may be used for treatment of ischemic strokes caused by a blood clot that blocks or plugs a blood vessel in the brain. Ex 1001, code (54), 1:28–3:6. We reproduce Figure 47 from the '883 patent below.

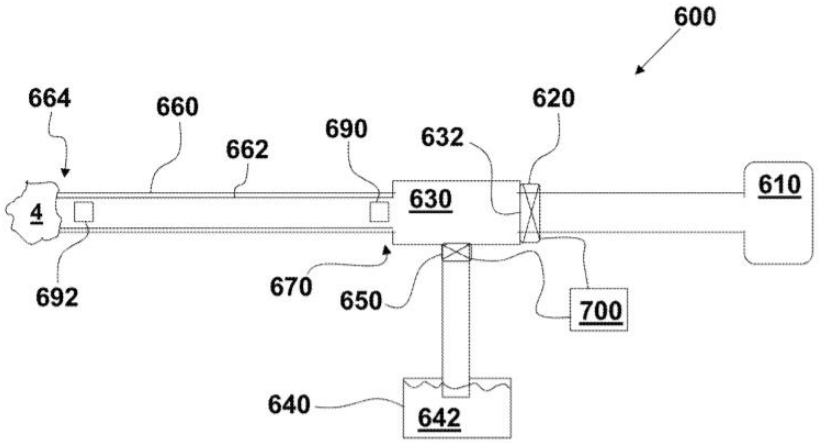

FIG. 47

Figure 47 illustrates an embodiment of the aspiration thrombectomy system 600 of the '883 patent that operates in a Rapid Onset Aspiration Repeater ("ROAR") mode. Ex. 1001, 33:22–24; 35:19–22; Fig. 47. The system includes a vacuum source 610 fluidically connected to the input of a controllable vacuum valve 620, which in turn is fluidically connected to the vacuum input of a manifold 630. *Id.* at 35:22–28. A vent fluid source 640 containing a vent liquid 642 is fluidically connected to a controllable vent valve 650. *Id.* at 35:29–31. A ROAR catheter 660, configured to operate in relatively small vessels, "defines a working lumen 662 fluidically connecting a distal end 664 thereof to a proximal manifold connector assembly 670 at a proximal end of the ROAR catheter 660." *Id.* at 35:55–58.

Operation of the aspiration thrombectomy system 600 occurs through a controller 700 that "selectively opens and closes the vacuum and vent valves 620, 650 such that, when the vacuum valve 620 is opened, the vacuum source 610 is fluidically connected to the liquid column in the lumen 662 and, when the vent valve 650 is opened, vent liquid 642 is fluidically connected to the liquid column in the lumen 662." Ex. 1001, 36:39–45. Controller 700 controls the timing of these valves to "change a level of vacuum at the distal end 664 and prevent the distal portion of the liquid column in the lumen 662 from exiting the distal end 664—substantially no forward flow." *Id.* at 36:45–49.

During a ROAR cycle, "suction is applied to the clot by rapidly opening a valve, causing a rapid rise in vacuum pressure." *Id.* at 40:32–34. The source of suction is then turned off and a vent fluid source is rapidly opened, which "relieves the vacuum present in the catheter 660, which again

rapidly changes the pressure applied to the clot." *Id.* at 40:34–37. In some embodiments of the ROAR cycle, both the vacuum valve 620 and the vent valve 650 are closed at the same time before the vent valve is opened. *Id.* at 6:11–17, 43:17–44:10, Tables 1, 4, 5. "The vent valve 650 is then rapidly closed and the vacuum valve 620 is rapidly opened." *Id.* at 40:37–38. "This cycle is repeated multiple times per second." *Id.* at 40:39.

According to the '883 patent, the "ROAR effect overcomes the static friction of a clot that is fixed or 'stuck' on the catheter tip while under constant suction" by "provid[ing] an oscillating/alternating displacement that causes the clot to 'shuttle' back and forth to overcome static frictional force." *Id.* at 7:9–14. With ROAR, "there is a morcellation of the clot that overcomes different clot morphologies as well as overriding volume and diameter constraints of the small, fixed luminal volume dictated by the micro-anatomic environment." *Id.* at 7:14–18.

E. Illustrative Claims

Petitioner challenges claims 1–18 of the '883 patent. Claim 1, which is an independent claim, is illustrative of the challenged claims, and is reproduced below:

1. [Pre] A clot removal system, comprising:

[a] a catheter having a distal end and defining a lumen filled with a liquid column having a proximal portion and a distal portion;

[b] a controllable vacuum valve;

[c] a vacuum source fluidically connected to the vacuum valve;

[d] a controllable vent valve having a vent liquid input;

> [e] a vent fluid source containing a vent liquid and fluidically connected to the vent valve to retain the vent liquid at the vent fluid input;
>
> [f] a manifold connected to the catheter, to the vacuum valve, and to the vent valve, the manifold fluidically connecting the proximal portion of the liquid column in the lumen: to the vacuum source through the vacuum valve; and to the vent fluid source through the vent valve;
>
> [g] a controller connected to the vacuum valve and the vent valve and configured to selectively open and close the vacuum valve and the vent valve such that: responsive to opening the vacuum valve, the vacuum source is fluidically connected to the liquid column in the lumen; and responsive to opening the vent valve, the vent fluid source is fluidically connected to the liquid column in the lumen,
>
> [h] the controller configured to cyclically open and close the vacuum valve and the vent valve to: change a level of vacuum at the distal end; and
>
> [i] prevent forward flow of the distal portion out from the distal end during each cycle.

Ex. 1001, 55:5–35 (annotated with bracketed letters). Challenged claims 2–17 depend from claim 1, either directly or indirectly. Challenged claim 18 is independent and is similar to claim 1 except for the last few limitations. The underlined text below highlights the additions to claim 18:

> . . . [18.h] the controller configured to cyclically open and close the vacuum valve and the vent valve <u>in a repeated cycle comprising a double-closed state in which the vacuum valve is closed and the vent valve is closed</u> to: change a level of vacuum at the distal end; and
>
> [18.i] prevent forward flow of the distal portion out from the distal end during each cycle, <u>and</u>

[18.j] a time of the double-closed state is not greater than approximately 30 ms.

Id. at 56:40–57:7.

F. INSTITUTED GROUNDS OF UNPATENTABILITY

We instituted trial to determine whether claims 1–18 of the '883 patent are unpatentable based on the following grounds:

Ground	Claims Challenged	35 U.S.C. §[1]	Reference(s)/Basis
1	1–12, 15, 16, 18	103	Teigen,[2] Grey[3]
2	2, 3, 6–9, 18	103	Teigen, Grey, Rubenstein[4]
3	13, 14	103	Teigen, Grey, Yang[5]
4	17	103	Teigen, Grey, Matteo[6]

[1] The Leahy-Smith America Invents Act ("AIA"), Pub. L. No. 112–29, 125 Stat. 284 (2011), amended 35 U.S.C. § 103, effective March 16, 2013. Because the '883 patent has an effective filing date after March 16, 2013, the AIA version of § 103 applies.

[2] Teigen et al., US 11,096,712 B2, issued Aug. 24, 2021 (Ex. 1007, "Teigen").

[3] Grey et al., WO 2014/151209 A1, published Sept. 25, 2014 (Ex. 1010, "Grey").

[4] Morton K. Rubenstein, US 3,955,574, issued May 11, 1976 (Ex. 1011, "Rubenstein").

[5] Yang et al., US 2017/0238953 A1, published Aug. 24, 2017 (Ex, 1012, "Yang").

[6] Joseph Matteo, US 2012/0138833 A1, published June 7, 2012 (Ex. 1013, "Matteo").

II. ANALYSIS

A. PRINCIPLES OF LAW

To prevail in its challenges to the patentability of all claims of the '883 patent, Petitioner must demonstrate by a preponderance of the evidence that the claims are unpatentable. 35 U.S.C. § 316(e) (2018); 37 C.F.R. § 42.1(d) (2019). "In an [*inter partes* review], the petitioner has the burden from the onset to show with particularity why the patent it challenges is unpatentable." *Harmonic Inc. v. Avid. Tech., Inc.*, 815 F.3d 1356, 1363 (Fed. Cir. 2016); *see also* 35 U.S.C. § 312(a)(3) (requiring *inter partes* review petitions to identify "with particularity . . . the evidence that supports the grounds for the challenge to each claim"). That burden of persuasion never shifts to Patent Owner. *Dynamic Drinkware, LLC v. Nat'l Graphics, Inc.*, 800 F.3d 1375, 1378 (Fed. Cir. 2015); *see also In re Magnum Oil Tools Int'l, Ltd.*, 829 F.3d 1364, 1375–78 (Fed. Cir. 2016) (discussing the burden of proof in *inter partes* review).

B. PERSON OF ORDINARY SKILL IN THE ART

We consider the asserted grounds of unpatentability in view of the understanding of a person of ordinary skill in the art ("POSA" or "POSITA"), and thus begin with the level of ordinary skill in the art. The level of ordinary skill in the art is "a prism or lens through which . . . the Board views the prior art and claimed invention" to prevent hindsight bias. *Okajima v. Bourdeau*, 261 F.3d 1350, 1355 (Fed. Cir. 2001).

The parties dispute the level of ordinary skill in the art. Petitioner, relying on the testimony of Mr. Brown, contends that a person of ordinary skill in the art as of the relevant date would be either:

> (1) a person with a B.S. in engineering or an equivalent field, with two to four years of academic or industry experience in aspiration embolectomy and thrombectomy or comparable industry experience who would, where necessary or desired, work or consult with others, including a physician, to develop embolectomy or thrombectomy devices; or (2) an interventional neurosurgeon with at least three years of experience developing and/or using medical devices in embolectomy or thrombectomy procedures, and who would, where necessary, work or consult with others, including an engineer, to develop such a medical device.

Pet. 15 (citing Ex. 1005 ¶ 48). Petitioner also contends that, "[a] person with less education but more relevant practical experience, or more relevant education but less practical experience, may also meet this standard." *Id.*

Patent Owner contends that neither of Petitioner's proposed definitions of a POSITA reflect the level of ordinary skill because "individuals with a B.S. degree in an undefined engineering discipline or an interventional neurosurgeon with no engineering training would lack the necessary background in fluid mechanics." PO Resp. 6 (citing Ex. 2014 ¶ 43). Instead, Patent Owner, relying on the testimony of Dr. Finol, asserts that a POSITA:

> would have a B.S. in mechanical engineering with at least three years of experience in designing systems for minimally invasive intravascular procedures for treating occluded vessels or the equivalent and in consultation with medical professionals such as interventional neurosurgeons.

Id. (citing Ex. 2014 ¶ 44).

In determining the level of ordinary skill, various factors may be considered, including "(1) the educational level of the inventor; (2) type of problems encountered in the art; (3) prior art solutions to those problems;

(4) rapidity with which innovations are made; (5) sophistication of the technology; and (6) educational level of active workers in the field." *Daiichi Sankyo Co. v. Apotex, Inc.*, 501 F.3d 1254, 1256 (Fed. Cir. 2007). These factors are "merely a guide," and the weight or significance ascribed to each depends on the particular case. *Id.*

Based on our consideration of the full record, we find that, overall, Patent Owner's definition is more specifically tailored to the claimed subject matter of the '883 patent. We also find that, a person with a biomedical engineering degree could have the required background in fluid mechanics. *See* Ex. 1031, 45:21–46:7. Therefore, we find that a person of ordinary skill in the art would have a B.S. in mechanical or biomedical engineering with at least three years of experience in designing systems for minimally invasive intravascular procedures for treating occluded vessels or the equivalent and in consultation with medical professionals such as interventional neurosurgeons.

Although we agree with, and have primarily adopted Patent Owner's definition for an ordinarily skilled artisan in this proceeding, our analysis and conclusions herein would not change even under Petitioner's definition. The parties also do not indicate that the outcome would differ based on the definition of the person of ordinary skill in the art. *See* Pet. 15; PO Resp. 6; Pet. Reply 1.

C. CLAIM CONSTRUCTION

Having defined the ordinarily skilled artisan, we now turn to claim construction. In this *inter partes* review, claim terms are construed using the same claim construction standard that would be used to construe the claim in

a civil action under 35 U.S.C. § 282(b). 37 C.F.R. § 42.100(b). Under this claim construction standard, claim terms are given their ordinary and customary meaning as would have been understood by one of ordinary skill in the art at the time of the invention. *See id; Phillips v. AWH Corp.*, 415 F.3d 1303, 1313 (Fed. Cir. 2005) (en banc). A patentee may define a claim term in a manner that differs from its ordinary and customary meaning; however, any special definitions must be set forth in the specification with reasonable clarity, deliberateness, and precision. *See In re Paulsen*, 30 F.3d 1475, 1480 (Fed. Cir. 1994); *see also Martek Biosciences Corp. v. Nutrinova, Inc.*, 579 F.3d 1363, 1380 (Fed. Cir. 2009) ("When a patentee explicitly defines a claim term in the patent specification, the patentee's definition controls"); *3M Innovative Properties Co. v. Avery Dennison Corp.*, 350 F.3d 1365, 1371 (Fed. Cir. 2003) ("a definition of a claim term in the specification will prevail over a term's ordinary meaning if the patentee has acted as his own lexicographer and clearly set forth a different definition").

1. *"the change in the level of vacuum at the distal end is greater than approximately [15]/[20]/[25] inHg and no greater than approximately [50]/[30]/[20] ms"*

Petitioner provides proposed constructions for the terms, "the change in the level of vacuum at the distal end is greater than approximately [15]/[20]/[25] inHg and no greater than approximately [50]/[30]/[20] ms." Pet. 21–23. Petitioner proposes that these terms be construed to mean that "the change in the level of vacuum from low to high or from high to low at the distal end is greater than approximately [15]/[20]/[25] inHg and the time for that change is no greater than approximately [50]/[30]/[20] ms." *Id.* at

21 (citing Ex. 1005 ¶ 82). Patent Owner does not contest this proposed construction. Ex. 2014 ¶ 40. We find that this proposed construction is consistent with the specification of the '833 patent and consistent with how a POSA would understand the term at the time of the invention. Ex. 1001, 38:57–39:5; Ex. 1005 ¶¶ 81–82. Therefore, we adopt Petitioner's proposed construction for these terms.

2. *"forward flow"*

In the Institution Decision, we found that the term "forward flow" required construction. Inst. Dec. 26. We construed the term to mean, "an amount of liquid in the lumen . . . that exits the distal end . . . in the distal direction" and "is defined as greater than 6 microliters of fluid." *Id.* (citing Ex. 1001, 36:18–22). Petitioner agrees with this construction, but Patent Owner does not. *See* Pet. Reply 1–2; PO Resp. 30–33; PO Sur-Reply 3. Patent Owner contends that the phrase, "*prevent forward flow of the distal portion out of the distal end during each cycle*," means "controlling the distal movement of the fluid column such that the distal portion of the fluid column is prevented from fully exiting the distal end of the catheter during each cycle." PO Resp. 30; 33 (citing Ex. 2014 ¶ 89). We address the parties' positions below.

a. Patent Owner's Position

Patent Owner disagrees with the Board's construction of "forward flow" in the Institution Decision because it contends that the '883 patent:

> does not teach that the state of no forward flow is limited to when ***at least a portion*** of the distal portion of the fluid column is prevented from exiting the distal end, but rather that the state

> of no forward flow is when ***the*** distal portion of the fluid column is prevented from exiting the distal end of the catheter.

PO Resp. 30–31 (citing Ex. 2014 ¶ 86). Patent Owner asserts that a POSITA would have understood that "forward flow is prevented so long as the full extent of the **distal portion** of the fluid column is prevented from exiting the catheter." *Id.* at 31 (citing Ex. 2014 ¶ 86).

Patent Owner further asserts that the '883 patent defines the distal portion of the fluid column as follows:

> depending on the context used with respect to the catheter 660, the proximal and **distal portions** of the liquid column can be a given amount (e.g., less than 20 microliters or less than 5 microliters), can be a given length (e.g., a few mm or cm) or it can be an instance of the column that is approximated by using statistical flow analyses.

PO Resp. 31 (citing Ex. 1001, 36:4–10). Thus, according to Patent Owner, the distal portion of the fluid column can be 20 microliters of fluid in the fluid column at the distal end of the catheter. *Id.* (citing Ex. 2014 ¶ 87). Patent Owner asserts that a person of ordinary skill would adopt its construction because the purpose of preventing forward flow is to prevent the fluid within the catheter from pushing away or breaking up the clot. *Id.* at 32–33. Patent Owner further contends that the Board's construction of "forward flow" is improper because it imports limitations from a single embodiment into the claims. PO Sur-Reply 2–3.

b. Petitioner's Position

Petitioner counters that the Board's proposed construction of "forward flow" is supported by the '883 patent specification and is consistent with the language of the claims. Pet. Reply 2 (citing Ex. 1030 ¶¶ 13–15). Petitioner

also asserts that Patent Owner's proposed construction is ambiguous, confusing, and unsupported. *Id.* at 3–4. According to Petitioner, Patent Owner's construction "effectively eliminates the concept of preventing forward flow" because "it would permit any arbitrarily selected amount of fluid to leave the catheter," which could displace the thrombus a distance away from the catheter in to the patient's vasculature. *Id.* at 4 (citing Ex. 1030 ¶¶ 17–19; Ex. 1001, 2:65–3:4, 37:45–54). Petitioner also contends that Dr. Finol's testimony regarding "forward flow" does not support Patent Owner's proposed construction. *Id.* at 4–5 (citing Ex. 1031, 110:2–6, 112:13–17).

c. Construction of "forward flow"

We agree with Petitioner's proposed construction of "forward flow" as adopted by the Board in the Institution Decision. The '883 patent explicitly defines this term, stating:

> The term "forward flow" is used herein to ***define*** an amount of liquid in the lumen 662 that exits the distal end 664 in a distal direction. Forward flow is ***defined as greater than 6 microliters of fluid*** (approximately 1 mm of catheter length of ID 0.071″=5.7 μL).

Ex. 1001, 36:18–23 (emphasis added). Moreover, in discussing problems with the prior art systems, the '883 patent states that "[w]hen positive pressure exists at the distal end of the lumen, liquid from inside the lumen exits out from the distal end of the catheter in a distal direction. This is referred to as forward flow." *Id.* at 2:62–65. In the '883 patent, the patentee acted as its own lexicographer as evidenced by usage of language such as "is used herein to define," "is defined," and "is referred to as," to discuss "forward flow." We find that the definition of "forward flow" in the '883

patent specification would provide a person of ordinary skill with "reasonable clarity, deliberateness, and precision" as to the meaning of the term. *See Paulsen*, 30 F.3d at 1480; *see also* Ex. 1030 ¶¶ 13–14; Ex. 2001 ¶¶ 53, 62. Thus, we construe the term, "forward flow," to mean "an amount of liquid in the lumen that exits the distal end in the distal direction that is greater than 6 microliters."

We disagree with Patent Owner's contention that this construction imports limitations from a single embodiment into the claims. As explained above, the '883 patent clearly defines the term "forward flow" and this definition is not limited to a single embodiment. In fact, the '883 patent indicates that, while "[f]orward flow is defined as greater than 6 microliters of fluid . . . [l]ess forward flow is also included in this definition." Ex. 1001, 36:21–24. The '883 patent specifies that "the amount of forward flow can be restricted to no greater than 2 microliters or, in a particularly beneficial embodiment, forward flow is approximately zero microliters." *Id.* at 36:24–29. This language indicates that our construction encompasses multiple embodiments from the '883 patent.

We also disagree with Patent's Owner's proposed construction of "forward flow" because it is not supported by the '883 patent specification. Patent Owner contends that "there is 'no forward flow' until the full extent of the distal portion" exits the distal end and thus forward flow is prevented when only less than "the full extent of the distal portion" exits the distal end. PO Resp. 30–31 (emphasis omitted). To adopt Patent Owner's proposed construction, we would have to essentially ignore the '883 patent's express definition of this term. Further, there is no support in the'883 patent specification for "full extent" or "fully exiting." We also agree with

Petitioner that Patent Owner's construction effectively eliminates the concept of preventing forward flow because, as Patent Owner acknowledges, it could allow, for example, 20 milliliters of fluid to exit the catheter, which could displace the thrombus into the patient's vasculature, a problem that the '883 patent seeks to avoid. *See* PO Resp. 31 (citing Ex. 2014 ¶ 87).

We are also not persuaded by Patent Owner's proposed construction due to the inconsistent positions of its Declarant, Dr. Finol, regarding the meaning of "forward flow." In his first Declaration, Dr. Finol appeared to agree with the Board's construction of the term. *See* Ex. 2001 ¶¶ 53 ("[a] POSITA would understand that, according to fundamental principles of fluid mechanics, to achieve forward flow out from the distal end of the catheter as defined in the '883 patent (i.e., more than 6 µl of fluid out from the distal end) . . . ."); 62 ("the '883 Patent defines "forward flow" as a volume of liquid greater than about 6 µl, so 'preventing forward flow' allows flow up to 6 µl or less.").

By contrast, in Dr. Finol's second Declaration, he adopts Patent Owner's new construction of the term "forward flow." *Compare* Ex. 2001 ¶¶ 53, 62, *with* Ex. 2014 ¶¶ 86–89. Dr. Finol's discussion of "forward flow" in his second Declaration appears to be nearly identical to the claim construction discussion in Patent Owner's Response, without any additional analysis. *Compare* Ex. 2014 ¶¶ 86–89, *with* PO Resp. 30–33. Furthermore, during his deposition, Dr. Finol appears to have provided a different definition of "forward flow" in stating:

> the definition of forward flow is such that ***the entire distal portion of the column of fluid*** exits the distal end of the catheter, [and] ***is then drawn back into the catheter*** during each cycle. That's how you would prevent forward flow.

Ex. 1031, 110:2–6 (emphasis added).

> If 20 microliters leave the distal end of the catheter during one phase of the cycle, as long as those 20 microliters are withdrawn back into the catheter during another phase of the cycle before the cycle ends, then we have essentially prevented forward flow.

Id. at 112:13–17. Dr. Finol's opinion that preventing "forward flow" allows any amount of liquid to flow forward out the distal end so long as that same amount of liquid is eventually drawn back in is inconsistent with the goal of the '883 patent to prevent the thrombus from flowing downstream. Because Dr. Finol's testimony regarding the construction of "forward flow" is inconsistent, we find his opinions on this topic to be less credible and we do not find that a POSITA would construe the term as he suggests in his second Declaration.

D. THE '883 PATENT PRIORITY DATE

The application that issued as the '883 patent was filed on July 18, 2019, and claims priority to U.S. Provisional App. Nos. 62/750,011 ("the '011 provisional), filed October 24, 2018, and 62/701,086 ("the '086 provisional"), filed July 20, 2018. Ex 1001, codes (22), (60).

The parties dispute whether the claims of the '883 patent are entitled to the filing date of the '011 provisional or whether they are only entitled to the actual filing date of the '883 patent.[7] *See* Pet. 8; Pet. Reply 6–8;

[7] We note that Patent Owner does not contend that the claims of the '883 patent are entitled to the filing date of the '086 provisional. *See* PO Resp. 26; Ex. 2014 ¶ 74. We also note that Patent Owner does not contend that claims 10–12 of the '883 patent are entitled to the benefit of either provisional application. *See* PO Resp. 36, n.5.

PO Resp. 29–36, PO Sur-Reply 2–3. In particular, the parties disagree as to whether the '011 provisional describes and enables the limitation of "prevent[ing] forward flow." *Id.* After considering all the cited evidence of record on the priority issue, we find that the evidence favors Petitioner's position. As explained below, we find that the challenged claims are not sufficiently supported by the written description of the '011 provisional application and are only entitled to a priority date of July 18, 2019.

1. Principles of Law

Although the petitioner has the ultimate burden of persuasion to prove unpatentability, a patent owner must demonstrate entitlement to a priority date when the patent owner relies on that priority date to overcome an anticipation or obviousness argument. *See Dynamic Drinkware,* 800 F.3d at 1379–80 (discussing burdens in *inter partes* review to show entitlement to provisional filing dates). "[A] patent's claims are not entitled to an earlier priority date because the patentee claims priority. . . . Rather, for a patent's claims to be entitled to an earlier priority date, the patentee must demonstrate that the claims meet the requirements of 35 U.S.C. § 120," which include fulfilling the requirements of § 112. *In re NTP, Inc.*, 654 F.3d 1268, 1276–77 (Fed. Cir. 2011) (citations omitted)); *see also Research Corp. Techs., Inc. v. Microsoft Corp.*, 627 F.3d 859, 870–71 (Fed. Cir. 2010); *Tech. Licensing Corp. v. Videotek, Inc.*, 545 F.3d 1316, 1327–29 (Fed. Cir. 2008).

"[T]he hallmark of written description is disclosure," and "the test [for satisfaction of the written description requirement] requires an objective inquiry into the four corners of the specification from the perspective of a

person of ordinary skill in the art." *Ariad Pharms., Inc. v. Eli Lilly & Co.*, 598 F.3d 1336, 1351 (Fed. Cir. 2010) (*en banc*). The written description "must 'clearly allow persons of ordinary skill in the art to recognize that [the inventor] invented what is claimed,'" and "reasonably" convey to those skilled in the art "that the inventor had possession of the claimed subject matter as of the filing date." *Id.* (alteration in original, internal citations omitted). Stated another way, "one skilled in the art, reading the original disclosure, must immediately discern the limitation at issue in the claims." *Purdue Pharma L.P. v. Faulding Inc.*, 230 F.3d 1320, 1323 (Fed. Cir. 2000). "Whether a claim satisfies the written description requirement is a question of fact." *Nalpropion Pharms., Inc. v. Actavis Labs. FL, Inc.*, 934 F.3d 1344, 1348 (Fed. Cir. 2019) (citing *Ariad*, 598 F.3d at 1351).

2. <u>Patent Owner's Position</u>

Patent Owner argues that the '011 provisional application provides support for "prevent[ing] forward flow" under its proposed construction of that term. PO Resp. 33–35. Patent Owner points to several portions of the '011 provisional as support for this claim element. *Id.* First, Patent Owner cites to the '011 provisional disclosure which describes an aspiration thrombectomy system "that temporarily halts the vacuum at the distal end of the aspiration catheter, pushes the thrombus distally out of the lumen, and then re-applies the vacuum." *Id.* at 33 (citing Ex. 1003 ¶ 15). Patent Owner also cites to disclosure in the '011 provisional which states that "[i]t is desirable to have a minimal amount of momentum transfer from the fluid column to the stuck clot to unstick the clot sufficiently so that the next vacuum cycle macerates the clot against the distal end of the catheter 410

and causes it to enter the lumen of the catheter 410 and be removed from the vessel" and that "[t]he exiting movement of fluid is limited to a specific volume and/or pressure and is automatically and precisely controlled" to prevent the "possibility of overshooting." *Id.* (citing Ex. 1003 ¶¶ 16, 138). According to Patent Owner, "[a] POSITA would have understood that a 'minimal amount of momentum transfer from the fluid column' means that some, but only a minimal—e.g., 'no'—amount of a distal portion of the fluid column exits the distal end of the catheter." *Id.* at 33–34 (citing Ex. 2014 ¶ 90).

Patent Owner further contends that the '011 provisional application discloses multiple examples of liquid flow exiting the distal end of the catheter such that no forward flow occurs, such as 1 microliter or 0.5 mm of column shift. PO Resp. 34 (citing Ex. 1003 ¶ 91 (providing ranges of approximately "0.001 ml to approximately 1.0 ml," "0.5 mm to 30 mm," and "0.5 mm to 15 mm")). According to Patent Owner, such specific embodiments of "substantially no forward flow" provide evidence that a POSITA would have understood that the inventors of the '011 provisional "had possession of a system including controlling the opening and closing of the vacuum and vent valves to control the distal movement of the fluid column such that the distal portion of the fluid column is prevented from fully exiting the distal end of the catheter." *Id.* (citing Ex. 2014 ¶ 91).

Patent Owner also contends that Petitioner's arguments regarding Grey, one of the references relied upon for the challenges presented in the Petition, confirm that a person of skill in the art would have understood that the inventors of the '011 provisional application had possession of the "prevent[ing] forward flow" limitation. PO Resp. 35. According to Patent

Owner, Petitioner argues that Grey discloses "preventing forward flow" without the "more definitive teachings" in the '011 provisional application. *Id.*

3. *Petitioner's Position*

Petitioner counters that the '011 provisional application does not describe or enable the claim limitation of "prevent forward flow" under any party's construction. Pet. Reply 6. Petitioner contends that the '011 provisional "expressly relied on forward (distal) movement of fluid to create distal movement of the clot that is stuck." *Id.* (citing Ex. 1003 ¶ 126). According to Petitioner, the '883 patent explicitly distinguishes the description of the forward-flow mode of operation in the '011 provisional from the claimed requirement of preventing forward flow. *Id.* at 6–7 (citing Ex. 1001, 30:58–60, 35:19–20). Petitioner also contends that Patent Owner does not point to any support from the '011 provisional application that limits the amount of exit flow to below 6 microliters, as defined by the '883 patent specification, or even to 20 microliters. *Id.* at 7.

4. *Analysis of Priority*

We find that the disclosure of the '011 provisional application is not sufficient to provide adequate written description support for the limitation of "prevent[ing] forward flow."

As discussed above, we construed "forward flow" to mean "an amount of liquid in the lumen that exits the distal end in the distal direction that is greater than 6 microliters." Thus, for the '011 provisional to provide support for this limitation, the provisional must demonstrate that the inventors had possession of preventing greater than 6 microliters of fluid out

of the distal end of the catheter. While Patent Owner points to disclosure from the '011 provisional application which describes "a minimal amount of momentum transfer from the fluid column to the stuck clot to unstick the clot sufficiently" and "[t]he exiting movement of fluid [being] limited to a specific volume and/or pressure and is automatically and precisely controlled" to prevent the "possibility of overshooting," it would not convey to one of ordinary skill in the art that the inventors were in possession of a device that limited forward flow to no greater than 6 microliters of fluid. PO Resp. 33 (citing Ex. 1003 ¶¶ 16, 138).

Patent Owner also contends that the '011 provisional application provides "multiple examples of liquid flow exiting the distal end of the catheter such that no forward flow occurs, such as 1 microliter or 0.5 mm of column shift." PO Resp. 34 (citing Ex. 1003 ¶ 91). However, the disclosure cited by Patent Owner provides ranges of liquid flow of "approximately 0.001 ml to approximately 1.0 ml, in particular, approximately 0.1 ml to approximately 0.5 ml" and exemplary length of shift distances of "approximately 0.5 mm to approximately 30 mm, in particular, approximately 0.5 mm to approximately 15 mm." Ex. 1003 ¶ 91. There is nothing in the disclosure of the '011 provisional application that specifically directs the person of ordinary skill to the portions of these ranges which fall within the '883 patent's definition of no "forward flow" (i.e., no greater than 6 microliters of fluid). In fact, the majority of the cited ranges are greater than 6 microliters, going all the way up to 1,000 microliters, such that there would be forward flow in these examples. *See* Ex. 1030 ¶ 29; *Purdue Pharma*, 230 F.3d at 1326–27 ("[O]ne cannot disclose a forest in the original application, and then later pick a tree out of the forest and say here is my

invention. In order to satisfy the written description requirement, the blaze marks directing the skilled artisan to that tree must be in the originally filed disclosure."); *Fujikawa v. Wattanasin*, 93 F.3d 1559, 1571 (Fed. Cir. 1996).

Further, we note that the '883 patent differentiates between embodiments that allow forward flow with those in which no forward flow occurs. Ex. 1001, 30:59–60; 35:19–22; Pet. Reply 6–8. For example, the '883 patent describes an embodiment in which the "momentum causes a small amount of fluid to move through the distal portion of the catheter [] and create a small distal movement of the clot." Ex. 1001, 30:47–50. This same embodiment is disclosed in the '011 provisional application. *Compare* Ex. 1003 ¶ 126 *with* Ex. 1001, 30:16–57. The '883 patent describes this disclosure as an "exemplary embodiment" in which the "flow of fluid forward . . . is intentional, which is in contrast to other exemplary embodiments herein where substantially no forward flow occurs." Ex. 1001, 30:58–60; *see also, id.* at 35:19–20 ("Turning now to embodiments . . . without the forward flow").[8] This further demonstrates that the '011 provisional application does not support the limitation of "prevent[ing] forward flow."

[8] Patent Owner contends that the statement in the '883 patent regarding the "exemplary embodiment" of "forward flow" is referring to an embodiment in which the volume of the liquid drawn out from the lumen of the catheter is "approximately 0.2 ml." PO Resp. 40–41 (citing Ex. 1001, 30:33–36; Ex. 1003 ¶ 126; Ex. 2014 ¶ 96). Even if this is correct, the '011 provisional application does not include the embodiments that the '883 patent specifically characterizes as being "without the forward flow." Pet. Reply 6–7; Ex. 1005 ¶ 68; Ex. 1030 ¶¶ 26–27.

We are also not persuaded by Patent Owner's argument about Grey. PO Resp. 35. Although Patent Owner contends that Grey provides less disclosure than the '011 provisional with respect to "preventing forward flow," Patent Owner's argument conflates the written description analysis with an obviousness analysis. *See Ariad*, 598 F.3d at 1352 ("[A] description that merely renders the invention obvious does not satisfy" the written description requirement.).

Thus, we find that the '011 provisional application does not "clearly allow persons of ordinary skill in the art to recognize that [the inventors] invented what is claimed." *In re Gosteli*, 872 F.2d 1008, 1012 (Fed. Cir. 1989); *Lockwood v. American Airlines, Inc.*, 107 F.3d 1565, 1572 (Fed. Cir. 1997) (to fulfill the written description requirement, a patent specification "must describe an invention and do so in sufficient detail that one skilled in the art can clearly conclude that the inventor invented the claimed invention").

We also note that the '011 provisional application does not contain adequate support for the limitation of "prevent[ing] forward flow" even under Patent Owner's proposed construction. While the '011 provisional discloses "controlling the distal movement of the fluid column" (Ex. 1003 ¶¶ 15, 16), this does not support Patent Owner's assertion that the '011 provisional teaches that "the distal portion of the fluid column is prevented from fully exiting the distal end." PO Resp. 34. For example, as discussed above, the '011 provisional application discloses permitting distal flow of up to 1,000 microliters, which would likely exceed the amount that could be characterized as the full distal portion. Ex. 1003 ¶ 91; Ex. 1030 ¶ 29.

Accordingly, we find that the '883 patent is only entitled to a priority date of July 18, 2019.

E. Asserted Obviousness of Claims 1–12, 15, 16, and 18 by Teigen in View of Grey

Petitioner contends that the subject matter of claims 1–12, 15, 16, and 18 of the '883 patent are obvious over the disclosure of Teigen in view of Grey. Pet. 23–63. Patent Owner disputes Petitioner's contentions. PO Resp. 7–45; PO Sur-Reply 3–17.

1. Principles of Law

A claim is unpatentable under 35 U.S.C. § 103 if the differences between the subject matter sought to be patented and the prior art are such that the subject matter, as a whole, would have been obvious at the time the invention was made to a person having ordinary skill in the art to which said subject matter pertains. *KSR Int'l Co. v. Teleflex Inc.*, 550 U.S. 398, 406 (2007). The question of obviousness is resolved on the basis of underlying factual determinations, including: (1) the scope and content of the prior art; (2) any differences between the claimed subject matter and the prior art; (3) the level of skill in the art; and (4) when in evidence, objective evidence of non-obviousness, i.e., secondary considerations. *See Graham v. John Deere Co.*, 383 U.S. 1, 17–18 (1966).

"The combination of familiar elements according to known methods is likely to be obvious when it does no more than yield predictable results." *KSR*, 550 U.S. at 416. "[W]hen the question is whether a patent claiming the combination of elements of prior art is obvious," the answer depends on "whether the improvement is more than the predictable use of prior art

elements according to their established functions." *Id.* at 417. It is generally obvious to those skilled in the art to substitute one known equivalent for another. *See In re Omeprazole Patent Litigation*, 483 F.3d 1364, 1374 (Fed. Cir. 2007) ("[T]his court finds no . . . error in [the] conclusion that it would have been obvious to one skilled in the art to substitute one ARC [alkaline reactive compound] for another."); *see also Wm. Wrigley Jr. Co. v. Cadbury Adams USA LLC*, 683 F.3d 1356, 1364 (Fed. Cir. 2012) (the combination of known elements and substitution of one well known agent for another is obvious).

When there is a range disclosed in the prior art, and the claimed invention falls within that range, or the disclosed range overlaps with the claimed range, there is a presumption of obviousness. *Iron Grip Barbell Co. v. USA Sports, Inc.*, 392 F.3d 1317, 1322 (Fed. Cir. 2004); *In re Peterson*, 315 F.3d 1325, 1329 (Fed. Cir. 2003) ("In cases involving overlapping ranges, we and our predecessor court have consistently held that even a slight overlap in range establishes a *prima facie* case of obviousness."); *see also In re Geisler*, 116 F.3d 1465, 1469 (Fed. Cir. 1997) (noting that a claimed range overlaps with a prior art range if the two ranges share a common endpoint (e.g., claim range of 50–100 Å overlaps with prior art range of 100–600 Å)). This presumption may be rebutted by showing the criticality of the claimed range, that the prior art taught away from the claimed range, or that the parameter was not recognized as "result-effective." *E.I. DuPont de Nemours & Company v. Synvina C.V.*, 904 F.3d 996, 1006 (Fed. Cir. 2018); *Iron Grip*, 392 F.3d at 1322.

2. *Teigen (Ex. 1007)*

Teigen, titled "Aspiration Thrombectomy System and Methods for Thrombus Removal with Aspiration Catheter," is directed to devices and methods for controlling clot removal from a patient's vasculature by aspiration thrombectomy. Ex. 1007, code (54), 1:17–21. Teigen discloses a vacuum aspiration control system for use with a vacuum source and an aspiration catheter. *Id.*, code (57).

Teigen further discloses that its vacuum aspiration system comprises a connecting tube, on-off valve, sensing unit, controller, fluid introduction unit, three-point junction, and fluid injection valve for pulsed aspiration. Ex. 1007, 3:60–4:17, 14:61–18:7. Teigen discloses that the controller is configured to receive signals from pressure sensors in the system, and opens and closes the vacuum and fluid injection valves to "clear occlusions in an aspiration catheter or to facilitate the aspiration of clot that are large or otherwise hard to aspirate." *Id.* at 3:60–4:17, 14:61–18:7. Teigen teaches that the pressure pulse can create a force impulse that breaks static friction momentarily, allowing a lower dynamic friction to ingest thrombus. *Id.* at 14:61–15:9. Teigen also discloses that, in one example, "pressure is generated by introducing fluid into the catheter, where the fluid is at a pressure between full vacuum and ambient pressure, at ambient pressure, at systolic pressure, or above systolic pressure." *Id.* at 15:37–40.

In some embodiments of Teigen, "the controller may modulate a vacuum valve [] and a pressure valve [], whereby the closing of the vacuum valve [] and the opening of the pressure valve [] may result in a relative increase in pressure at a distal tip of an aspiration catheter." Ex. 1007, 17:45–49. Further, "[a]lternatively, the opening of the vacuum valve [] and

the closing of the pressure valve [] may result in a relative decrease in pressure at the distal tip of the aspiration catheter [].” *Id.* at 17:50–52.

3. Teigen Priority Date

Teigen issued on August 24, 2021, from U.S. Patent Application No. 16/988,556 (“the ’556 application), filed August 7, 2020. Ex. 1007, codes (21), (22), (45). The ’556 application is a continuation of PCT/US2019/043095 (“the ’095 PCT application”), filed on July 23, 2019. *Id.* at code (63). The ’095 PCT application claims the benefit of priority to U.S. Provisional Application Nos. 62/778,708 (“the ’708 provisional”), filed December 12, 2018, and 62/702,804 (“the ’804 provisional”), filed July 24, 2018. *Id.* at code (60).

Petitioner contends that Teigen qualifies as prior art under 35 U.S.C. §§ 102(a)(2) and 102(d)(2) because the relevant subject matter of Teigen relied on in the Petition is fully supported by both provisional applications such that Teigen has a priority date of July 24, 2018 (i.e., the filing date of the ’804 provisional). Pet. 16. Patent Owner contends that Petitioner failed to establish that Teigen is prior art. PO Resp. 7–26; PO Sur-Reply 3–9.

a. Parties’ Positions

Patent Owner contends that Teigen is not prior art because it is not entitled to claim priority to either of its provisional applications. PO Resp. 7–26. Specifically, Patent Owner asserts that, under *Dynamic Drinkware*, in order to establish that Teigen is entitled to the priority benefit of its provisional applications, Petitioner has to show that (1) at least one claim of Teigen is supported by the Teigen provisionals, and (2) the portions of Teigen relied on to argue obviousness are supported by the provisional

applications. *Id.* at 9 (citing *Dynamic Drinkware*, 800 F.3d at 1378–79). According to Patent Owner, Petitioner fails the first part of the *Dynamic Drinkware* analysis because the '804 provisional does not provide written description support for one claim of Teigen. *Id.*

Patent Owner also contends that the Petition failed to include any arguments that portions of Teigen relied on to show obviousness of the challenged claims are supported by either provisional because it only provided bare cites to its Expert Declaration in violation of 37 C.F.R. § 42.6(a)(3). PO Sur-Reply 4–5.

Petitioner counters that the first part of the *Dynamic Drinkware* analysis is limited to pre-AIA patents and does not apply to Teigen.[9] Pet. Rep. 8–9. Petitioner also contends that it has demonstrated that the subject matter of Teigen relied on in the Petition is supported by the Teigen provisionals. *Id.* at 9 (citing Pet. 15–18, 25–63; Ex. 1005 ¶¶ 86, 104–248, 290–312; Ex. 1030 ¶ 31).

b. Analysis

First, we address the issue of whether Petitioner is required to establish that at least one claim of Teigen is supported by the Teigen provisionals in order to establish that Teigen is prior art to the '883 patent. For the reasons discussed below, we find that, under AIA §§ 102(a)(2) and 102(d), there is no need to evaluate whether any claim of a reference patent

[9] Alternatively, Petitioner provides arguments as to how the provisional applications provide support for claim 1 of Teigen. Pet. 16 (citing Ex. 1005 ¶¶ 84–95); Pet. Reply 8–13.

document is actually entitled to priority when applying such a reference patent as prior art.

As discussed above, we find that the priority date of the '883 patent is July 18, 2019 (and its earliest effective filing date is July 20, 2018). Ex. 1001, codes (22), (60). Because these dates are after March 16, 2013, the AIA version of § 102 applies in this proceeding. 35 U.S.C. § 100 (note). Thus, we evaluate the prior art status of Teigen under AIA 35 U.S.C. §§ 102(a)(2) and (d).

Section 102(a)(2) states:

> A person shall be entitled to a patent unless— . . .
> (2) the claimed invention was described in a patent issued under section 151, or in an application for patent published or deemed published under section 122(b), in which the patent or application, as the case may be, names another inventor and was *effectively filed* before the effective filing date of the claimed invention.

35 U.S.C. § 102(a)(2) (emphasis added).

Section 102(d) states:

> For purposes of determining whether a patent or application for patent is prior art to a claimed invention under subsection (a)(2), such patent or application *shall be considered to have been effectively filed, with respect to any subject matter described in the patent or application*—
>
> (1) if paragraph (2) does not apply, as of the actual filing date of the patent or the application for patent; or
>
> (2) if the patent or application for patent *is entitled to claim a right of priority* under section 119, 365(a), 365(b), 386(a), or 386(b), or *to claim the benefit* of an earlier filing date under section 120, 121, 365(c), or 386(c) based upon 1 or more prior filed applications for patent, *as of the filing date of the earliest*

such application that describes the subject matter.

35 U.S.C. § 102(d) (emphases added).

AIA § 102 draws a distinction between *actually being entitled* to a right of priority to, or the benefit of, a prior-filed application according to the definition of "effective filing date" of a claimed invention in AIA 35 U.S.C. § 100(i)(1)(B), and merely being *entitled to claim* a right of priority to, or the benefit of, a prior-filed application for prior-art purposes according to the use of "effectively filed" in AIA 35 U.S.C. § 102(d). *See* 35 U.S.C. §§ 100(i)(1)(B), 102(a)(2), 102(d)(2); MPEP § 2154.01(b).

USPTO guidance also indicates that AIA § 102 prior-art reference effective-filing-date determinations differ from pre-AIA law. For example, a 2018 Memorandum to the Patent Examining Corps states, in the context of prior-art determinations, that "[t]he requirement that one of the claims in the patent [document] . . . be supported by the written description of the provisional application in compliance with pre-AIA 35 U.S.C. § 112, first paragraph (or AIA 35 U.S.C. § 112(a)), *is not applicable when examining an application subject to the first inventor to file provisions of the AIA*." Robert W. Bahr, *Memorandum re: Critical Reference Date Under pre-AIA 35 U.S.C. §102(e)* (Apr. 5, 2018), available at http://www.uspto.gov/sites/default/files/documents/dynamic_memo_05apr2018_0.pdf (emphasis added) (citing *Dynamic Drinkware*, 800 F.3d at 1381 n.2; 157 Cong. Rec. 3423 (2011) (explaining the distinction between being entitled to claim priority or benefit in AIA 35 U.S.C. § 102(d) and actually being entitled to priority or benefit under 35 U.S.C. § 119, 120, or 365)). This Memorandum further indicates:

> The date subject matter was "effectively filed" under AIA 35 U.S.C. § 102(d) for purposes of considering a U.S. patent, a U.S. patent application publication, or an international application publication as prior art under AIA 35 U.S.C. § 102(a)(2) is discussed in MPEP § 2154.01(b), and is not affected by *Dynamic Drinkware* or [*Amgen v. Sanofi*, 872 F.3d 1367, 1380 (Fed. Cir. 2017)] and is not being modified by this memorandum.

Id. at 2. MPEP § 2154.01(b) explicitly states, as a result of the distinction discussed above, in application of the AIA version of § 102, "the question of whether a patent or published application is *actually entitled to priority* or benefit with respect to any of its *claims* is *not at issue in determining the date the patent or published application was 'effectively filed' for prior art purposes*." MPEP § 2154.01(b) (emphases added).

Based on the above, we determine that, for prior-art determinations under AIA § 102, "there is no need to evaluate whether any claim of [a reference] patent document is *actually entitled to priority* or benefit under 35 U.S.C. 119, 120." MPEP § 2154.01(b) (emphasis added). Rather, under the AIA, a reference patent document need only meet the "ministerial requirements" of §§ 119 and 120, and the provisional or other earlier application(s) to which the reference patent document claims a right of priority must "describe[] the subject matter" relied upon in the reference patent document as prior art. 35 U.S.C. § 102(d)(2).

As discussed in the Institution Decision, we find that Teigen meets the procedural requirements for claiming priority to the '095 PCT application. Inst. Dec. 14–15. Teigen also appears to meet the ministerial requirements for claiming priority to the provisional applications because it properly claims the benefit of these applications, the '095 PCT application was filed

co-pending with the provisional applications, and the applications share common inventors. Ex. 1007, codes (22), (60), (63), (72); Ex.1008, 2; Ex. 1009, 2; Ex. 2005, codes (22), (30), (72). Patent Owner does not dispute that Teigen meets the "ministerial requirements" of § 119 at this stage of the proceeding. Because we find that the *Dynamic Drinkware* analysis does not apply here, we agree with Petitioner and Patent Owner, that we need not reach the issue of whether a claim from Teigen is supported by either Teigen provisional application. PO Sur-Reply 4; Pet. Reply 8–9.

This determination is consistent with other recent, nonprecedential PTAB decisions. *See, e.g.*, *Apple Inc. v. Telefonaktiebolaget LM Ericsson*, No. IPR2022-00341, Paper 10, at 14–22 (PTAB Sept. 14, 2022) (finding explicitly that Petitioner did not need to conduct a *Dynamic Drinkware* analysis under AIA § 102(d) based on statutory language, legislative history, USPTO Guidance on *Dynamic Drinkware*, and the MPEP). We find that the *Forescout Technologies* case cited by Patent Owner is inapposite because, in that case, the Board found that the petitioner failed to show that the provisional application provided sufficient support for the subject matter relied upon in the reference patent. *See Forescout Technologies, Inc. v. Fortinet, Inc.*, No. IPR2021-01328, Paper 12, at 9–10 (PTAB Jan. 27, 2022). *Forescout Technologies* did not address whether the petitioner had to show that the provisional application provided written description support for at least one claim of the reference patent under *Dynamic Drinkware*. *Id.*

With regard to Patent Owner's contention that the Petition failed to include any arguments that the portions of Teigen relied on to show obviousness of the challenged claims were supported by either provisional, as explained in our Institution Decision, the Petition states that the relevant

subject matter relied on in Teigen is fully supported by both provisional applications. Inst. Dec. 15; Pet. 16 (citing Ex. 1005 ¶¶ 84–95). The Petition also cites to portions of Teigen it relies on and provides parallel citations to both Teigen provisionals. Pet. 16–18. Further, in discussing each claim limitation, the Petition cites to the Brown Declaration, which contains specific citations to the supporting disclosure from the provisional applications. *See, e.g.*, Pet. 23–63 (citing Ex. 1005 ¶¶ 112–247). We do not find this to be an improper incorporation by reference.

As recognized by the Board and the Federal Circuit, the prohibition against incorporation by reference set forth in 37 C.F.R. § 42.6(a)(3) "minimizes the chance that an argument would be overlooked and eliminates abuses that arise from incorporation and combination," and is intended to prevent the situation where "the Board would be forced to 'play archeologist with the record' for arguments that might have been made outside the parties' briefing." *3M Co. v. Evergreen Adhesives, Inc.*, 860 F. App'x 724, 725 (Fed. Cir. 2021). Here, both Patent Owner and the Board were provided sufficient notice of Petitioner's reliance on the cited portions of the Brown Declaration concerning support in the provisional applications for Teigen's disclosure. As such, there was no need to "play archeologist with the record."

Petitioner thus sufficiently shows that the Teigen provisional applications describe the subject matter relied on in Teigen.[10] Our

[10] Because we agree with Petitioner's proposed construction of the term "forward flow" and find that the '883 patent is only entitled to a priority date of July 18, 2019, we agree with Patent Owner that "Teigen's priority to [the '804 provisional] does not matter. PO Sur-Reply 3.

obviousness analysis below also provides citations to the provisional applications, showing how they describe the relied on subject matter from Teigen for each limitation.

4. Grey (Ex. 1010)

Grey, titled "Dynamic Aspiration Methods and Systems," is directed to "an aspiration system" including "a catheter[], an aspiration source providing a negative pressure in the catheter, and a device which repetitively changes the negative pressure to produce a dynamic suction force at a distal end of the catheter." Ex 1010, codes (54), (57), 5:1–4. Grey discloses that "[n]egative pressure and negative pressure oscillations are delivered by a fluid medium," and that, in some embodiments, a "second aspiration fluid may be provided at a positive pressure." *Id.* at 3:22–24, 8:24–25. Grey teaches that "dynamic aspiration as taught [] may cause facture and break-up of a clot applying smaller suction forces which are repetitively varied to induce material fatigue." *Id.* at 10:17–19.

Grey also discloses that "[o]ne very serious risk is the escape and travel of occlusive material from the initial site of occlusion to a distal portion of the lumen or to another lumen branching therefrom." Ex. 1010, 7:10–12. According to Grey, "[p]roviding a non-zero suction force in the catheter at all times reduces the risk of occlusive material breaking free of a clot and traveling distally in the vessel." *Id.* at 13:7–11.

Grey was published on September 25, 2014 and Petitioner contends that it qualifies as prior art at least under §102(a)(1) because it was published prior to the effective filing date of the '883 Patent. Ex. 1010, code (43);

Pet. 18. Patent Owner does not contest that Grey is prior art to the '883 patent.

5. Claim 1

Petitioner, with supporting testimony from Mr. Brown, provides evidence as to where Teigen and Grey disclose the limitations of claim 1 of the '883 patent. Pet. 25–41; Ex. 1005 ¶¶ 104–160. Patent Owner argues that Petitioner did not establish a motivation to combine Teigen and Grey. PO Resp. 43–45. We address the claim limitations and Patent Owner's arguments below.

a. Claim 1 [1Pre]–[1h]

We find that Teigen alone or in combination with Grey discloses limitations [1Pre]–[1h] of claim 1. Patent Owner does not contest that these claim elements are disclosed by Teigen or Grey. *See generally* PO Resp.

Teigen discloses "[a] clot removal system" because it describes "devices and methods for controlling clot removal from a patient's vasculature by aspiration thrombectomy." Ex. 1007, 1:17–21; Pet. 26 (citing Ex. 1005 ¶¶ 112–115 (citing, e.g., Ex. 1008 ¶¶ 1, 5–7; Ex. 1009 ¶¶ 2, 6–9)). Petitioner demonstrates that Teigen's system, explicitly or inherently, contains a catheter having a "distal end and defining a lumen with a liquid column having a proximal portion and a distal portion." Ex. 1007, 3:33–59, 6:6–21; Pet. 27 (citing Ex. 1005 ¶¶ 116–19 (citing Ex. 1008 ¶¶ 10, 11, 20; Ex. 1009 ¶¶ 12, 13, 22)). Petitioner shows that Teigen, with the knowledge of a person of ordinary skill, discloses the components described in limitations [1b]–[1g]; these include: a controllable vacuum valve and vacuum source that are fluidically connected (Pet. 27–30 (citing Ex. 1005

¶¶ 120–129 (citing Ex. 1008 ¶¶ 12, 18–20, 57, 61, 63, Figs. 9, 11; Ex. 1009 ¶¶ 12–14, 21–22, 59, 63, 65, Figs. 9, 11))); a vent fluid source, containing a vent liquid, that is fluidically connected to a vent valve to retain the vent liquid at a vent fluid input (Pet. 31–33 (citing Ex. 1005 ¶¶ 130–135 (citing Ex. 1008 ¶¶ 63–65, Fig. 13; Ex. 1009 ¶¶ 65–67, Fig. 13))); a manifold that fluidically connects the proximal portion of the catheter/lumen to the vacuum and vent portions (Pet. 33–35 (citing Ex. 1005 ¶¶ 136–139 (citing Ex. 1008 ¶¶ 10–12, 13, 17, 19–20, 57, 61–65, Figs. 9, 11, 13; Ex. 1009 ¶¶ 12–15, 19–22, 59, 63–69, Figs. 9, 11, 13))); and a controller connected to and configured to open and close the valves to fluidically connect them to the liquid column (Pet. 35–37 (citing Ex. 1005 ¶¶ 140–144 (citing Ex. 1008 ¶¶ 10–12, 13, 17, 19–20, 57, 61–65, Figs. 9, 11, 13; Ex. 1009 ¶¶ 12–15, 19–22, 59, 63–69, Figs. 9, 11, 13))). Petitioner further describes how Teigen, in view of the knowledge of a person of ordinary skill, teaches that its controller cyclically opens and closes valves to change the level of vacuum at the distal end. *See* Pet. 37–40 (citing Ex. 1005 ¶¶ 145–149 (citing Ex. 1008 ¶¶ 61–67; Ex. 1009 ¶¶ 63–67)).[11]

b. [1i] "prevent forward flow of the distal portion out from the distal end."

Teigen discloses a controller configured to cyclically open and close its vacuum and fluid injection valves to change a level of vacuum at the

[11] Alternatively, we also find persuasive Petitioner's arguments that Teigen in view of Grey would teach limitation [1h] because of Grey's disclosure of the "***dynamic suction force at the distal end of the catheter***." Pet. 39–40 (citing Ex. 1010, 4:25–30; Ex. 1005 ¶¶ 150–153). We also find that a person of ordinary skill would have been motivated to combine Teigen and Grey for the reasons we discuss *infra*.

distal end of the catheter during each extraction cycle in order to more effectively digest blood clots at the distal end of the aspiration catheter. *See* Pet. 37–38; Ex. 1005 ¶¶ 145–149, 155 (citing Ex. 1007, 3:60–4:26, 5:4–22, 6:6–21; 11:1–25, 14:61–18:22, 23:28–33; Ex. 1008 ¶¶ 12, 13, 17, 20, 57, 61–65; Ex. 1009 ¶¶ 14, 15, 19, 22, 59, 63–69). Teigen also discloses that the fluid introduced into the catheter from the fluid source can be "at a pressure between full vacuum and ambient pressure," such as to partially relieve the vacuum in the catheter. Pet. 40 (citing Ex. 1005 ¶ 155; Ex. 1007, 15:34–43); Ex. 1008 ¶ 65; Ex. 1009 ¶ 67.

We further find that, based on the disclosure in Teigen, one of ordinary skill in the art would understand that the level of vacuum and amount of fluid injected out of the distal end of the catheter could be adjusted in order to more effectively remove a clot. Grey describes and seeks to solve the same problem as the '883 patent—positive pressure causing forward clot movement. Grey teaches the "very serious risk [of] the escape and travel of occlusive material from the initial site of occlusion to a distal portion of the lumen or to another lumen branching therefrom." Ex. 1010, 7:10–12. To minimize this risk, Grey teaches that "the magnitude of the baseline pressure is preferably maintained above zero (i.e., a vacuum is maintained)" and that "[p]roviding a non-zero suction force in the catheter at all times reduces the risk of occlusive material breaking free of a clot and traveling distally in the vessel." *Id.* at 13:7–11. Both parties and their declarants acknowledge that a device's ability to prevent clots from traveling distally was a known goal and would have been a motivating factor to improve these types of devices for those in the art at the time of filing. *See* Pet. 40–41; Ex. 1005 ¶¶ 158–159; Ex. 2001 ¶¶ 24–26; PO Resp. 32–34;

Ex. 2014 ¶¶ 89–90. Accordingly, we find that Grey provides a person of ordinary skill in the art with the motivation to operate aspiration devices in a way that would prevent liquid from exiting the distal end of the catheter—i.e. preventing forward flow.

Based on these disclosures, we find that it would have been obvious to a person of ordinary skill to operate the controller of Teigen in such a way as to prevent portions of the clot from breaking free and traveling distally in the vessel as Grey teaches. In other words, it would have been obvious to operate Teigen's controller in a way that would prevent forward flow. This could be done, for example, by introducing the fluid into the catheter "at a pressure between full vacuum and ambient pressure," thereby providing a non-zero suction force, as disclosed in Teigen and Grey. Ex. 1007, 15:37–40; Ex. 1008 ¶¶ 63–65; Ex. 1010, 13:7–11; Ex. 1005 ¶¶ 156–160. A person of ordinary skill would have understood this to mean preventing "greater than 6 microliters" from exiting the distal end because, as Patent Owner's Declarant, Dr. Finol, explains, "[a] POSITA would have understood that there would be ***no flow*** 'out from the distal end' at any time if a 'non-zero suction force' was provided at 'all times in the catheter' as taught by Grey." Ex. 2001 ¶ 82 (emphasis added).

Patent Owner asserts that Petitioner fails to establish a motivation to combine Teigen with Grey because Petitioner's arguments are unsupported, cursory, and fail[] to address the technical realities of the two references it attempts to combine." PO Resp. 43–45. According to Patent Owner, Petitioner provides a list of alleged benefits of Grey and concludes that a "POSA would recognize that Teigen **could be** configured to achieve the benefits as taught by Grey," while obviousness is dependent on what a

POSITA **would** do. *Id.* at 44 (citing *Belden Inc. v. Berk–Tek LLC*, 805 F.3d 1064, 1073 (Fed. Cir. 2015)). Patent Owner asserts that a person of mere ordinary skill would not have been motivated to make the proposed combination. *Id.* For example, Patent Owner contends that Petitioner provides no evidence or explanation to support its statement that "combining the teachings of Teigen and Grey would have been well within the skill of a POSA because it is nothing more than combining known vacuum aspiration technologies described in these references to perform their intended functions with described benefits and predictable results." *Id.* at 44 (citing Pet. 24).

Patent Owner further contends that "Grey unambiguously teaches the necessity of providing a non-zero suction force at all times" and that a POSITA:

> would understand it would be far more efficient, much simpler, and present much less risk of causing deadly distal embolus migration, to maintain a non-zero suction force in the catheter at all times as taught by Grey if the suction is always "on" - i.e., a vacuum valve does not cycle to a "closed" position in which the suction is stopped.

PO Resp. 45 (citing Ex. 2014 ¶ 161). According to Patent Owner, Petitioner provides no evidence or arguments that the proposed modifications that introduce flow out of the distal end of the catheter would have been within the level of skill of Petitioner's proposed definition of a POSITA–i.e., individuals with no specific training in mechanical engineering or fluid mechanics. *Id.*

We find that Petitioner has provided sufficient evidence of motivation to combine the disclosures of Teigen and Grey and that it would have been

well within a POSITA's level of skill in the art to modify Teigen's controller to implement Grey's teachings. *See* Pet. 23–25, 41–42; Ex. 1005 ¶¶ 104–111; Ex. 1030 ¶ 63. We agree with Petitioner and Mr. Brown that a POSA would have been motivated to combine the teachings of Teigen and Grey because they "address similar problems related to conventional aspiration thrombectomy and share the common objective of improving aspiration efficiency." Pet. 23 (citing Ex. 1005 ¶¶ 104–111). We also agree that both Teigen and Grey "teach similar solutions involving a liquid source to temporarily vent/relieve vacuum within the catheter to create an accelerated suction force to efficiently remove blood clots from a patient's blood vessel into the device." *Id.* Teigen and Grey both discuss issues with clogged catheters and the limitations of static aspiration technologies for controlled clot aspiration. *Id.* at 24 (citing Ex. 1007, 1:57–2:23, 2:46–52, 3:12–32, 14:61–15:33; Ex. 1010, 1:7–9, 1:15–2:3). Both references also describe a similar approach of creating a dynamic aspiration force to more effectively clear clots from a clogged catheter. *Id.* at 24 (citing Ex. 1007, 2:24–64, 3:12–48, 14:61–18:7; Ex. 1010, 2:24–3:24). Further, we are persuaded by the testimony of Mr. Brown that:

> The aspiration cycle frequencies described by Grey are consistent with and improve on the aspiration cycles that Teigen discloses to provide effective cyclical aspiration thrombectomy. Using the pressure pulse profiles and constant non-zero suction force provided by Grey on Teigen's patients would help to reduce the risk of complications from aspiration thrombectomy, including clogged catheters and forward flow of material out of the distal end of the catheter into the patient's blood stream, as explicitly taught by Grey.

Ex. 1005 ¶ 108 (citing Ex. 1007, 14:61–18:22; Ex. 1008 ¶¶ 63–66; Ex. 1009 ¶¶ 65–69; Ex. 1010, 9:13–25, 10:28–11:3) (internal citations omitted).

For the reasons discussed above, we agree with Petitioner and Mr. Brown that "[c]ombining the teachings of Teigen and Grey would have been well within the skill of a POSA because it is nothing more than combining known vacuum aspiration technologies described in these references to perform their intended functions with described benefits and predictable results." Pet. 24 (citing *KSR*, 550 U.S. at 401; Ex. 1005 ¶ 107 ("A POSA would understand that Teigen and Grey are each directed to a cyclical aspiration thrombectomy system and related methods using a source of both positive and negative pressure to subject a blood clot to dynamic suction forces and more efficiently aspirate blood clots.")). We also find that a POSA would have had a reasonable expectation of success in combining the disclosures of Teigen and Grey because "it would have been well within a POSA's level of skill to modify the logic of Teigen's controller to implement Grey's teachings, and/or to incorporate well-known mechanical components, if needed, to carry out the functionality described in Grey." Pet. 25 (citing Ex. 1005 ¶ 109 ("any modification, if necessary, would simply add additional control logic to Teigen's system for modulating the pressures contained within the aspiration system, in accordance with the preferable pressure profiles as taught in Grey.")).

We are not persuaded by Patent Owner's argument that one of skill in the art would not have combined the teachings of Teigen and Grey because it would have been more simple and efficient to always have a non-zero suction force in the catheter at all times, as taught by Grey, such that the suction is always "on" – i.e., a vacuum valve does not cycle to a "closed"

position in which the suction is stopped. PO Resp. 45. First, Teigen discloses that the pressure generated by introducing fluid into the catheter can be "at a pressure between full vacuum and ambient pressure," which is a non-positive pressure. Ex. 1007, 15:37–39; Pet Reply 14; Ex. 1030 ¶ 56. Second, we are persuaded by the testimony of Dr. Finol and Mr. Brown that closing the vacuum valve does not necessarily lead to positive pressure or forward flow, particularly when the tip of the catheter is obstructed. Ex. 1030 ¶¶ 56–61; Ex. 1031, 91:10–15, 94:2–13; Ex. 2014 ¶ 63. Further, because we have adopted a definition of a POSA as one who would have training in mechanical engineering and fluid mechanics, along with experience in designing systems for minimally invasive intravascular procedures for treating occluded vessels, applying the teachings of Grey to provide a non-zero suction force in the catheter of Teigen would have been well within the level of skill in the art.

Upon review of parties' arguments and supporting evidence, we determine that Petitioner sufficiently explains why a POSA would have found it obvious to implement Grey's disclosure of "a non-zero suction force" in the system of Teigen to prevent forward flow. Therefore, we determine that Petitioner has demonstrated by a preponderance of the evidence that each limitation of claim 1 is taught or suggested by the combination of Teigen and Grey and further that the skilled artisan would have had reason to make the suggested combination with a reasonable expectation of success.

c. Objective indicia of non-obvious

In determining whether a claim is obvious in light of the prior art, we also consider any relevant evidence of secondary considerations of non-obviousness. *See Graham*, 383 U.S. at 17. Notwithstanding what the teachings of the prior art would have suggested to one of ordinary skill in the art at the time of the invention, the totality of the evidence submitted, including objective evidence of non-obviousness, may lead to a conclusion that the challenged claims would not have been obvious to one of ordinary skill. *In re Piasecki*, 745 F.2d 1468, 1471–72 (Fed. Cir. 1984).

Patent Owner presents evidence of long-felt need, failure of others, and skepticism. *See* PO Resp. 62–66. Patent Owner asserts that the '883 patent addressed a long-felt and persistent need for improved endovascular thrombectomy devices because, for example, "the ROAR system has nearly a 300% better full-ingestion rate than conventional aspiration systems." *Id.* at 63. Patent Owner contends that "[p]rior attempts to overcome the problems plaguing thrombectomy devices failed to significantly meet physicians' needs and improve patient outcomes." *Id.* at 64–65. Patent Owner also asserts that physicians performing clot removal procedures were skeptical about the aspiration thrombectomy devices and preferred to use stent-retriever treatment alone or aspiration treatment alone. *Id.* at 65–66 (citing Ex. 2017, 3; Ex. 2015 ¶ 36).

Objective evidence of nonobviousness is relevant only if there is a nexus between this evidence and the claimed invention. *Fox Factory, Inc. v. SRAM, LLC*, 944 F.3d 1366, 1373 (Fed. Cir. 2019). A presumption of nexus applies if the asserted objective evidence "is tied to a specific product and that product 'embodies the claimed features, and is coextensive with them.'"

Id. (quoting *Polaris Indus., Inc. v. Artic Cat, Inc.*, 882 F.3d 1056, 1072 (Fed. Cir. 2018)). To the extent that a presumption of nexus does not apply, Patent Owner may still prove nexus "by showing that the evidence of secondary considerations is the 'direct result of the unique characteristics of the claimed invention.'" *Id.* (quoting *In re Huang*, 100 F.3d 135, 140 (Fed. Cir. 1996)).

Petitioner argues, and we agree, that Patent Owner fails to demonstrate a nexus. Pet. Reply 32. Although Patent Owner asserts that the "claimed ROAR system," allegedly embodied by its RapidPulse product, has a nearly 300% better full-ingestion rate than conventional aspiration systems and that the '883 patent invention "addressed a long-felt need for an effective treatment for patients with ischemic stroke," Patent Owner provides no description of the RapidPulse product compared to the claims of the '883 patent. PO Resp. 62–64. Absent this information, Patent Owner does not establish the required nexus connecting the '883 patent claims to the RapidPulse product. *Id.* at 63–64. Also, we find that dynamic aspiration was known in the art and agree with Petitioner that much of Patent Owner's objective indicia are equally applicable to those known techniques. Pet. Reply 32; Ex. 2014 ¶ 32; Ex. 1030 ¶¶ 99–100; Ex. 1031, 25:6–14, 40:12–41:17.

For these reasons, we are not persuaded by Patent Owner's arguments that failure of others, long-felt need, and skepticism weigh toward the non-obviousness of the claimed subject matter.

d. Conclusions as to obviousness of claim 1 over Teigen and Grey

In sum, we find that the combination of Teigen and Grey teaches or suggests each and every element of claim 1. We find that an ordinarily skilled artisan would have been motivated to combine Teigen and Grey, and would have had a reasonable expectation of success in achieving the claimed invention. On this record, we also find that the evidence of secondary considerations of non-obviousness is weak, at best. As discussed above, we find that Patent Owner has not established the requisite nexus between the challenged claims and any of the asserted secondary considerations. We are therefore unable to accord them any substantial weight. *Fox Factory*, 944 F.3d at 1373.

Thus, after carefully considering the arguments and evidence, we determine that Petitioner has shown by a preponderance of evidence that claim 1 of the '883 patent would have been obvious over Teigen and Grey.

6. Claims 2, 3, 6–9, and 18: "Double-Closed State"

Claim 2 recites the clot removal system of claim 1 "wherein the controller is configured to cyclically open and close the vacuum valve and the vent valve in a repeated cycle comprising a double-closed state in which the vacuum valve is closed and the vent valve is closed." Ex. 1001, 55:36–40. Claims 3 and 18 further define that the "time of the double-closed state is no greater than approximately 30 ms." *Id.* at 56:40–57:7. Claim 6 recites a cycle that comprises a vacuum-only state, a first double-closed state, a vent-only state, and then a second double-closed state. *Id.* at 55:50–60. Claims 7–9 recite the timing of opening/closing the vents and periods of the cycle. *Id.* at 55:61–56:2.

Petitioner, with supporting testimony from Mr. Brown, provides evidence as to where Teigen and Grey disclose the limitations of dependent claims 2, 3, 6–9, and 18 of the '833 patent. Pet. 42–46, 49–54, 61–63. Patent Owner asserts that the Petition fails to establish obviousness of the "double-closed state" claims. PO Resp. 46–57. We review the parties' positions below.

a. Petitioner's Position

To support the contention that Teigen discloses a "double-closed state," Petitioner cites to claim 2 of Teigen which recites "a repeated cycle comprising a closed state in which the vacuum valve is closed and the vent valve is closed." Pet. 42 (citing Ex. 1005 ¶¶ 162–165; Ex. 1007, claim 2). Petitioner also cites to Teigen's teaching of sequences for opening and closing the vacuum and vent valves including where "both valves are closed for at least short periods of time." *Id.* at 43 (citing Ex 1007,16:51–18:7).

Petitioner further argues that, "[t]o the extent that Teigen does not explicitly disclose a double-closed state in which the vacuum valve and vent valve are both closed, a POSA would have found a double-closed state an obvious manner of implementing the dynamic aspiration sequence disclosed in Teigen." Pet. 43 (citing Ex 1005 ¶¶ 163–164). According to Petitioner, "[a] POSA would have found it obvious, in actual execution, to conduct the valve operation in serial to yield effective pulsing, e.g. closing the vacuum valve first and then opening the vent valve to generate the positive pulse" because "[t]his would have been an efficient way to build a positive pressure pulse." *Id.* (citing Ex. 1005 ¶164). Petitioner contends that, "if the vacuum valve remained open during this period, some of the positive pulse

introduced by opening the vent valve would be reduced by the vacuum." *Id.* Thus, according to Petitioner, "[b]ecause of the nature of serial operation, it would be obvious to have a finite delay (e.g. for confirming the state of the valve) between the closing of the vacuum valve and the opening of the vent valve, which leads to at least a brief period where both the vacuum valve and the vent valve are closed, *i.e.* the double-closed state." *Id.* at 43–44.

b. Patent Owner's Position

Patent Owner contends that neither claim 2 of Teigen nor the quote cited from Teigen at column 17, lines 5–7 have written description support in the provisional applications. PO Resp. 46–48. Patent Owner also argues that Petitioner's theories regarding obviousness of claim 2 are inconsistent with Petitioner's arguments for combining the disclosures of Teigen and Grey for claim 1 because "more effectively generating a positive pressure pulse . . . directly vitiates Petitioner's argument that a 'POSA would have been motivated in view of Grey to operate the dynamic aspiration system of [Teigen] in a manner that maintains a 'non-zero suction force' to prevent forward flow of the distal portion out from the distal end . . . [to] reduce the risk of a clot traveling distally, as taught in Grey' for claim 1." PO Resp. 48–49 (citing Pet. 43; Ex. 2014 ¶ 160). According to Patent Owner, "introduction of a 'double-closed' state would cut off the vacuum source such that the 'positive pressure pulse' produced during the subsequent open state of the vent valve would eliminate the 'non-zero suction force at all times in the catheter' required by the combination of Teigen [] and Grey." *Id.* at 49 (citing Ex. 2014 ¶ 160).

Patent Owner also argues that Petitioner did not establish in the Petition that the portions of Teigen relied on in its analysis of the "double-closed state" claims were prior art and that our consideration of Petitioner's Reply would violate Patent Owner's notice rights under 37 C.F.R. § 42.23(b) and the Administrative Procedure Act. PO Sur-Reply 9–10.

c. Analysis

We agree with Patent Owner that neither of Teigen's provisional applications include the disclosure from Teigen at column 17, lines 5–7 or claim 2. Therefore, we will not consider these disclosures in our analysis of the "double-closed state" claim limitations. However, we also find that Teigen and its provisionals contemplate the steps of (1) closing the vacuum valve, (2) opening the saline valve, (3) closing the saline valve, and (4) opening the vacuum valve, in a sequence that would result in a double-closed state, or at least render such a double-closed state to be an obvious manner of implementing the dynamic aspiration sequence disclosed therein. *See* Ex. 1005 ¶¶ 162–165 (citing Ex. 1007, 16:51–18:7; Ex. 1008 ¶¶ 63–65; Ex. 1009 ¶¶ 65, 67, 70); Ex. 1030 ¶¶ 65–74.

We agree with Petitioner that the Teigen provisionals "disclose that the vacuum valve and fluid injection valve can each be selectively opened/close when necessary, e.g., to cut off the vacuum and injection of fluid in the catheter." Pet. Reply 17–18 (citing Ex. 1008 ¶¶ 63, 65, 69; Ex. 1009 ¶¶ 65, 67, 70). For example, the '804 provisional application states:

> …***the system will close the on-off valve to the pump*** and ***open the valve 296 to the saline injection unit 290***. An influx or bolus of saline will partially relieve the vacuum. ***After a short***

> ***period of time the system will close valve 296*** and ***reopen the on-off valve*** to reestablish the aspiration vacuum.

Ex. 1008 ¶ 65 (emphasis added); *see also* Ex. 1008 ¶ 64 (the cycle entails "applying a vacuum, ***followed by reducing that vacuum with saline***…" (emphasis added); Ex. 1008 ¶ 69 ("***While*** aspiration is cycled off, saline injection is cycled on ***until*** aspiration is turned back on") (emphasis added). Thus, Teigen and its provisionals disclose serial valve operation in sequence, resulting in periods of double-closed states (or at least rendering such double-closed states to be an obvious manner of implementing the sequences). Ex. 1030 ¶ 74.

On the record before us during Institution, we expressed some skepticism as to whether a POSA would have combined the disclosures of Teigen and Grey to implement a "double-closed" state as recited in the claims. Inst. Dec. 34–35. On that record, we believed that Petitioner's arguments appeared to be in tension with its arguments regarding the combination of Teigen and Grey for claim 1 because we thought that a "double-closed state" would eliminate the "non-zero" suction force in the catheter. *Id.* However, upon further development of the record, we find that a "double-closed state" would not, in fact, eliminate the "non-zero" suction force. We now understand that, even when the vacuum vent is closed and the saline valve is open, some level of vacuum remains in the catheter in the absence of an injection of sufficient vent fluid. Ex. 1030 ¶¶ 58–60; Ex. 2014 ¶¶ 62; 63 ("Moreover, a POSITA also would understand that merely opening and closing the vacuum and pressure valves to deliver 'saline pulsated aspiration' as discussed in Teigen-Prov1 would not inherently produce a positive pressure pulse sufficient to overcome the mean arterial pressure

necessary for 'flow…out from the distal end of the catheter.'"). We also credit the testimony of Mr. Brown that, if the saline valve is closed during that time (i.e., a "double-closed state"), there would be even less vacuum reduction because the saline injection is stopped such that "a double-closed state does not inherently increase the risk of creating forward flow." Ex. 1030 ¶¶ 61, 75.

Accordingly, we find that a POSITA would not be dissuaded from closing the vent valve and vacuum valves for a brief period during the transition of various valve configurations disclosed in Teigen and that such a "double-closed state" is compatible with Grey's disclosure of using a "non-zero suction force at all times."[12] A POSA would understand that merely switching a vacuum off does not automatically eliminate the negative pressure created by the vacuum. *See* Ex. 1023 ¶¶ 18–20; Ex. 1010, 11:16–28, 13:4–11; Ex. 1008 ¶ 65 ("the system will close the on-off valve to the pump and open the valve 296 to the saline injection unit 290. An influx or bolus of saline will partially relieve the vacuum."); Ex. 1009 ¶ 67; Ex. 1031, 74:3–75:8; Ex. 1030 ¶ 75; Pet. 44; Ex. 1005 ¶ 167. Thus, a person of ordinary skill in the art would understand that a "double-closed state" is an obvious way to implement the combination of Teigen and Grey and would have a reasonable expectation of success in doing so, rendering claim 2 obvious.

[12] We do not find this position to be inconsistent with Petitioner's argument regarding a "positive pressure pulse" because we credit the testimony of Mr. Brown that a "positive pressure pulse" does not mean "positive pressure," but, rather, means a positive pressure differential (i.e., an increase in pressure). Ex. 1030 ¶ 75, n.11; Ex. 1007, 15:13–23.

We also find that claims 3 and 18 are obvious for similar reasons. First, we agree with Petitioner that "[a] POSA would have found it beneficial and obvious to minimize the double-closed state for efficient pulsed aspiration" because doing so would "optimize the efficiency of aspiration while limiting the risks of forward flow out of the distal end of the catheter." Pet. 45–46; Ex. 1005 ¶¶ 167–174. Grey teaches that "[d]ifferent frequencies of cyclic aspiration may be used to improve clot clearance" and discloses an embodiment in which the "frequencies may be at least 50 Hz." Ex. 1010, 10:28–31. We credit the testimony of Mr. Brown that a POSA would understand that there is in inverse relationship between frequency (e.g. the measurement of Hertz (Hz)) and cycle period and that "[a] cyclic aspiration frequency of 'at least 50 Hz' corresponds to an aspiration period of 'no greater than 20 ms' (1/(50 Hz) = 0.02 second = 20 ***millisecond***[s])." Pet. 45 (citing Ex. 1005 ¶ 169). Thus, a POSA would understand that the double-closed state portion of the cycle (like any portion of the cycle), would be less than 20 milliseconds. Ex. 1005 ¶ 169.

We also find that a POSA would have been motivated to experiment with the duration of the double-closed state in order to optimize the efficiency of the aspiration while limiting the risks of forward flow out of the distal end of the catheter to arrive at a double-closed state of "no greater than 30 ms" as claims 3 and 18 recite. Ex. 1005 ¶¶ 170–174; *E.I DuPont De NeMours*, 904 F.3d at 1006 ("where the general conditions of a claim are disclosed in the prior art, it is not inventive to discover the optimum or workable ranges by routine experimentation.") (citation omitted); *Peterson*, 315 F.3d at 1329.

Claim 6 recites a repeated cycle with two "double-closed states." Ex. 1001, 55:50–60. Teigen discloses a vacuum-only state, in which only the vacuum is on. *See* Ex. 1007, 15:10–33; Ex. 1008 ¶¶ 64–65; Ex. 1005 ¶ 190. As discussed above, Teigen in view of Grey discloses a "double-closed state" when serially turning off/on its vacuum and vent valves. We also find that it would have been obvious to have a "vent-only state." Teigen discloses a "vent-only state" because "[w]hen an extraction cycle is initiated, the vacuum on-off valve between the catheter and the aspiration source is closed and the pressure in the aspiration catheter is increased." Ex. 1007, 15:10–33; Ex. 1005 ¶¶ 177–180 (citing Ex. 1008 ¶¶ 20, 63–65). We credit the testimony of Mr. Brown that, a POSA "would understand that closing the valve to the vacuum source and then increasing the pressure in the aspiration catheter" is a disclosure of "a vent-only state." Ex. 1005 ¶¶ 178–179; 1007, 16:51–17:7. Because the "double-closed state" exists when changing between vacuum-only and vent-only states, the same operation would have been done when changing from vent-only to vacuum-only. We find that a POSA's motivation to include one "double-closed state" would have applied to a second double-closed state as well given Teigen and Grey's teachings that the aspiration process is repeated or cycled. Pet. 50–51; Ex. 1005 ¶¶ 195–196.

Claim 7, which depends from claim 6, recites that the time between opening and closing the vent "is between approximately 10 ms and approximately 50 ms." Ex. 1001, 55:61–64. As discussed above with respect to claim 3, Grey discloses that an entire aspiration cycle occurs within 20 ms. Ex. 1010, 9:13–25, 10:28–11:3; Ex. 1005 ¶¶ 185–186. We are persuaded by Mr. Brown's testimony that:

> Because the vent state, i.e. between an opening of the vent valve and a closing of the vent valve, can only last for a time shorter than the full aspiration period for a cyclic aspiration, a POSA would have understood that a cyclic aspiration frequency of "at least 50 Hz" inherently discloses a time of the vent state (i.e. the time between opening and closing the vent valve) of no greater than 20 ms, or that a cyclic aspiration frequency of "at least 10 Hz" inherently discloses a time of the vent-only state of no greater than 100 ms.

Ex. 1005 ¶ 200 (citing Ex. 1010, 9:13–25, 10:28–11:3). We also find that it would have been obvious to a POSA to "experiment with the tim[ing]" to come to "the claimed range through routine optimization." Pet. 52 (citing Ex. 1005 ¶ 202; *E.I. DuPont De NeMours*, 904 F.3d at 1006; Ex. 1023 ¶ 20).

Claims 8 and 9 depend from claim 6 and limit "a period of the cycle" to between "approximately 6 Hz and approximately 16 Hz" and "approximately 8 Hz and 12 Hz," respectively. Ex. 1001, 55:65–56:2. Teigen teaches that the cyclical aspiration's "frequency with which the on-off valve opens and closes may be predetermined or responsive to pressure sensor data." Ex. 1007, 15:10–33, 15:44–64. Grey discloses cyclical aspiration frequencies of "above 1 Hz," "at least 10 Hz," and specifically "approximately 6.3 Hz," among others. Ex. 1010, 9:13–25, 10:28–11:3, 11:29–31. We agree with Petitioner and Mr. Brown that a POSA would have been motivated to optimize these disclosures and arrive at the claimed invention. Pet. 53–54.

Thus, after carefully considering the arguments and evidence, we determine that Petitioner has shown by a preponderance of evidence that

claims 2, 3, 6–9, and 18 of the '883 patent would have been obvious over Teigen and Grey.[13]

7. Claims 4, 5, 15, and 16

Petitioner, with supporting testimony from Mr. Brown, provides evidence as to where Teigen and Grey disclose the limitations of dependent claims 4, 5, 15, and 16 of the '833 patent. *See Pet.* 46–49, 58–61. Other than Patent Owner's arguments regarding the motivation to combine Teigen and Grey, Patent Owner does not contest that Teigen and Grey disclose the limitations of these claims. We review the evidence presented by Petitioner at pages 46–49 and 58–61 of the Petition, which we adopt.

Claim 4 recites the system of claim 1, "wherein the controller is configured to cyclically open and close the vacuum valve and the vent valve in a repeated cycle comprising a vent-only state in which the vacuum valve is closed and the vent valve is open." Ex. 1001, 55:43–47. We find that

[13] We disagree with Patent Owner that Petitioner did not establish in the Petition that the portions of Teigen relied on in its analysis of the "double-closed state" claims were prior art. The Petition cited to the portions of Teigen it relied on to show obviousness of these claims and cited to the Brown Declaration for the corresponding cross-cites to the Teigen provisional applications. *See, e.g.*, Pet. 42–44 (citing Ex. 1005 ¶¶ 162–165). The Brown Declaration explains why a double-closed state would have been obvious from the disclosure of Teigen and Grey and cites to the same portions of the Teigen provisional applications that Petitioner cites to in the Petitioner Reply. *See* Ex. 1005 ¶¶ 162–165 (citing Ex. 1008 ¶¶ 63, 65; Ex. 1009 ¶¶ 65, 67, 70). Therefore, we find that Petitioner's Reply does not include new arguments or evidence with regard to the Teigen provisional applications. Any other additional material in the Petitioner Reply was responsive to arguments made in the Patent Owner Preliminary Response or the Institution Decision.

Teigen and Grey disclose the "repeated cycle" limitation for the same reasons discussed for claim 1. Pet. 46 (citing Ex. 1007, claim 4). We also find that Teigen discloses a "vent-only state" for the same reasons discussed for claim 6 above.

Claim 5 limits claim 4's "vent-only state" to "no greater than 50 ms." Ex. 1001, 55:48–49. Teigen discloses that the "time of the vent-only state is based on a predetermined frequency." Ex. 1007, claim 5; Ex. 1008 ¶ 64. We agree with Petitioner that "a POSA would optimize the time of the vent-only state in view of Grey," for example, because of the risk of a clot breaking free and traveling distally. Pet. 48; Ex. 1005 ¶ 184. Petitioner also argues that, "[b]ecause the vent-only state only lasts for a time shorter than the full aspiration period for a cyclic aspiration, a POSA would have understood that a cyclic aspiration frequency of 'at least 50 Hz' discloses a time of the vent-only state of no greater than 20 ms." Pet. 48–49 (citing 1005 ¶¶ 185–186). We also credit the testimony of Mr. Brown that a POSA would have been motivated to optimize the parameters such that "a time of vent-only state" is a result effective parameter. *Id.* at 49 (citing Ex. 1005 ¶¶ 187–188; *E.I. DuPont De NeMours*, 904 F.3d at 1006).

Claim 15 depends from claim 1 and recites a "repeated cycle" that "prevent[s] forward flow of the distal portion out from the distal end during each cycle by regulating timing of the vent valve." Ex. 1001, 56:28–32. Petitioner asserts that Teigen alone or Teigen in view of Grey disclose this limitation for the reasons discussed for claim 1. Pet. 59 (citing Ex. 1007, claim 11). We agree with Petitioner and Mr. Brown that a POSA would have found it obvious to prevent forward flow by regulating the timing of the vent valve because "a POSA would have recognized when the timing of

the vent valve is not regulated, there will be a significant likelihood of undesirable forward flow of the distal portion out from the distal end." Pet. 59–60 (citing Ex. 1005 ¶¶ 226–227; Ex. 1023 ¶ 20).

Claim 16 recites "[t]he system according to claim 1, wherein the controller is configured to cyclically open and close the vacuum valve and the vent valve to retain a level of pressure at the distal end at less than physiological pressure." Ex. 1001, 56:33–36. Petitioner asserts that:

> A POSA would have understood "prevent forward flow of the distal portion out from the distal end during each cycle" and the teachings of Grey—"[p]roviding a non-zero suction force" at the distal end of the catheter—to mean that the pressure at the distal end of the catheter remains at less than physiological pressure because if the pressure were to exceed the physiological pressure at the distal end, a non-zero suction force no longer exists and flow direction changes.

Pet. 60–61 (citing Ex. 1005 ¶¶ 233–234; Ex. 1010, 13:4–11; Ex. 1023 ¶ 19; Ex. 1007, 15:34–43). We are persuaded by Petitioner and Mr. Brown's position. Because the non-zero suction force would not exist if the distal pressure were to exceed physiological pressure, we find that a POSA would have found it obvious to prevent forward flow by operating Teigen's invention with Grey's "non-zero suction force" at less than physiological pressure.

Thus, after carefully considering the arguments and evidence, we determine that Petitioner has shown by a preponderance of evidence that claims 4, 5, 15, and 16 of the '883 patent would have been obvious over Teigen and Grey.

8. *Claims 10–12: "delta vacuum-time claims"*

Claim 10 recites the system of claim 1, "wherein the change in the level of vacuum at the distal end is greater than approximately 15 inHg and no greater than approximately 50 ms." Ex. 1001, 56:3–6. Claims 11 and 12 are similar but recite different pressures and times: "20 inHg" and "30 ms" in claim 11 and "25 inHg" and "20 ms" in claim 12. *Id.* at 56:7–15. As discussed above, we have construed these claim terms to mean that "the change in the level of vacuum from low to high or from high to low at the distal end is greater than approximately [15]/[20]/[25] inHg and the time for that change is no greater than approximately [50]/[30]/[20] ms."

a. Petitioner's Position

Petitioner contends that Teigen discloses a change in the level of vacuum at the distal end of the catheter and the use of pressure sensors to measure pressure differentials. Pet. 54–55; Ex. 1007, 11:1–12:9. Petitioner also contends that:

> a POSA could determine the change in the level of vacuum near the distal end of the catheter based on the change in the level of vacuum near the proximal end of the catheter using well-established principles of fluid dynamics, and would be motivated to do so given the importance of avoiding forward flow that was known to a POSA at the time.

Pet. 55 (citing Ex. 1005 ¶ 211; Ex. 1023 ¶¶ 17–20).

Petitioner further contends that Grey discloses that "the realized pressure differential (i.e. the magnitude of the difference between the maximum and minimum pressure achieved at the catheter tip) may be ***between 0 and -100 inHg***", or "[i]n some embodiments… ***between -5 and -20 inHg***." Pet. 55 (citing Ex. 1010, 13:4–11). Petitioner asserts that

these disclosed pressures at the distal end overlap with the claimed ranges of "greater than approximately 15/20/25 inHg" of "the change in the level of vacuum at the distal end." Pet. Reply 29–30; Pet. 55 (citing Ex. 1005 ¶ 213). Petitioner also contends that a "POSA would have recognized that the pressure differential is a result effective variable for safe and efficient thrombus extraction." Pet. 55–56 (citing Ex. 1005 ¶ 213; Ex. 1023 ¶ 20; Ex. 1010, 10:32–37). For example, "a POSA would have understood that a high pressure differential generally speeds up the material fatigue of a clot as taught in Grey and would thus choose to apply a pressure differential above a minimal threshold value to facilitate clot extraction." *Id.* at 55–56 (citing Ex. 1005 ¶ 213).

With regard to timing, Petitioner contends that Grey discloses that "[d]ifferent frequencies of cyclic aspiration may be used to improve clot clearance" and "[f]or some embodiments higher frequencies are more effective, particularly frequencies above 1 Hz. . . . frequencies may be at least 10 Hz and . . . frequencies may be at least 50 Hz." Pet. 56 (citing Ex. 1010, 10:28–31). Petitioner also cites to Grey's disclosure that, for a given frequency, "the rate of change of suction/vacuum pressure in the catheter and thus the total change of suction/vacuum pressure in the catheter can be selectively varied," which allows "control [of] both the frequency and amplitude of aspiration individually." *Id.* (citing Ex. 1010, 11:16–12:13). Petitioner also reiterates that "a frequency of at least 10 Hz corresponds to a period of less than 100 ms; a frequency of at least 50 Hz corresponds to a period of less than 20 ms." *Id.* According to Petitioner, "[i]t would have been obvious for a POSITA to apply the high-pressure differential disclosed

at a high frequency to optimize 'treatment efficacy' as directed by Grey." Pet. Reply 31 (citing Ex. 1030 ¶ 95).

Petitioner further argues that "[a] POSA would have understood that the aspiration frequency imposes an inherent limitation to the rate of change." Pet. 56 (citing Ex. 1005 ¶ 214). Therefore, according to Petitioner, "the time for the change in the level of vacuum from low to high or from high to low" must be shorter than the aspiration period, e.g. "no greater than 20 ms." *Id.* at 56–57 (citing Ex. 1005 ¶ 214). Lastly, according to Petitioner, the '883 patent does not teach any particular effect or criticality of the claimed range. *Id.* at 58.

b. Patent Owner's Position

Patent Owner contends that Petitioner does not establish that Teigen and Grey teach the recited combination of change in the level of vacuum over time, but, rather, only address each aspect in isolation. PO Resp. 58; PO Sur-Reply 24. According to Patent Owner, Petitioner could not demonstrate the recited combination of the change in vacuum over time because "Grey explicitly teaches that [the change in vacuum] decreases with increasing frequency such that at 50 Hz or even 10 Hz the [change in vacuum] would be less than 15 inHg." PO Resp. 60 (citing Ex. 2014 ¶ 165). Patent Owner contends that Example 1 is the only disclosure in Grey that explicitly describes combinations of vacuum pressure differentials together with frequency (i.e., time) in cyclic aspiration; however, in this example, the vacuum pressure differentials decreased as the frequency increased, such that at the 6.3 Hz maximum frequency, the pressure differentials decreased to only -13.9 inHg. *Id.* at 60–61 (citing Ex. 1010, 22:6–25:4; Ex. 2014

¶ 166). According to Patent Owner, Grey teaches that increasing the frequency decreases the vacuum differential linearly such that a POSA "would understand that increasing the frequency of Grey to 10 Hz or 50 Hz would result in a [change in the vacuum] far less than the -13.9 inHg that Grey achieved at only 6.3 Hz." *Id.* Therefore, Patent Owner asserts that a POSA would not have understood Grey to disclose any of the combinations of change in vacuum over time recited in the claims. *Id.* at 62 (citing Ex. 2014 ¶ 168).

Patent Owner also argues that Petitioner failed to demonstrate priority to the Teigen provisional applications for the "delta vacuum/time" claims. PO Sur-Reply 2.

c. Analysis

Teigen discloses a change in the level of vacuum at the distal end of the catheter.[14] Ex. 1007, 11:1–12:9. Grey discloses that "the realized pressure differential (i.e., the magnitude of the difference between the maximum and minimum pressure achieved at the catheter tip) may be between 0 and -100 inHg" or "[i]n some embodiments . . . between -5 and -20 inHg." Ex. 1010, 13:4–11. These disclosed pressures at the distal end encompass and/or overlap with the claimed range of "greater than approximately [15]/[20]/[25] in Hg" of "the change in the level of vacuum at

[14] We disagree with Patent Owner that Petitioner failed to demonstrate priority to the Teigen provisional applications for the "delta vacuum/time" claims. The Petition cites to paragraphs 209 to 221 of the Brown Declaration in support of its arguments that Teigen (in combination with Grey), rendered these claims obvious. Pet. 54–58. The cited paragraphs of the Brown Declaration cite to the portions of the Teigen provisional applications that disclose the challenged claim limitations.

the distal end." Ex. 1005 ¶ 213. With regard to timing, we agree with Petitioner and Mr. Brown that Grey teaches cycle times as low as 20 ms based on operating at 50 Hz. Pet. 56 (citing Ex. 1010, 10:28–31; Ex. 1005 ¶ 214); *see also* Pet. 45 (citing Ex. 1005 ¶ 169). This cycle time of less than 20 ms falls within the scope of the claimed timing of "no greater than approximately [50/30/20] ms." Pet. Reply 30 (citing Ex. 1030 ¶ 94; Ex. 1005 ¶¶ 214, 219). The question before us then is whether Petitioner sufficiently connects the pressure differentials disclosed in Grey with the separately disclosed frequencies in Grey such that the claimed combinations would be rendered obvious to one of ordinary skill in the art. We find that Petitioner has done so.

Grey discloses that "[d]ifferent frequencies of cyclic aspiration may be used to improve clot clearance in comparison to static aspiration" and "higher frequencies are more effective." Ex. 1010, 10:28–29. And we are persuaded by the testimony of Mr. Brown that "a POSA would have understood that a high-pressure differential generally speeds up the material fatigue taught in Grey." Ex. 1005 ¶ 213. Accordingly, we agree with Mr. Brown that "[i]t would have been obvious for a person of skill in the art to apply the high-pressure differential disclosed at a high frequency to optimize 'treatment efficacy' as directed by Grey." *Id.* ¶ 213; Ex. 1030 ¶ 95.

Patent Owner asserts that Example 1 of Grey does not disclose the claimed combination of pressure differential and timing; however, this is just an example and does not represent all embodiments of Grey. PO Resp. 60–61. Further, Grey expressly teaches, in the context of this example, use of a higher-pressure differential that increases both pressure differential and the rate of pressure change. Ex. 1030 ¶ 97; Ex. 1010, 12:1–3 (When "second

aspirating medium in Figure 3C operated at a positive pressure . . . ***the rate of pressure change*** would ***increase*** due to the ***increased pressure differential*** between aspiration mediums."). It is also notable that Figure 3C, cited by Patent Owner, depicts manual valve operation, while a POSITA would understand that a higher frequency with an improved rate of change could be accomplished using automatically controlled valves as disclosed in Teigen. Ex. 1010, 22:11, 23:1–9; Ex. 1030 ¶ 98.

We credit the testimony of Mr. Brown that, "[b]ecause "Grey teaches both a higher pressure differential and a higher frequency are preferable, it would have been obvious for a person of skill in the art to apply the high-pressure differential disclosed at a high frequency to optimize 'treatment efficacy' as directed by Grey." Ex. 1030 ¶ 95 (citing Ex. 1010, 10:22–29, 11:18–20). Also, because Grey discloses ranges that overlap with the claimed ranges of the change in the level of vacuum over time and Petitioner has not presented any evidence of criticality to these particular claimed ranges, we find these claims to be obvious. *See E.I. DuPont de NeMours*, 904 F.3d at 1006 (explaining that prior art ranges that overlap with a claimed range create "a presumption of obviousness," which may be rebutted if the patentee comes forward with evidence showing, *inter alia*, that the claimed invention achieves unexpected results). Accordingly, we find that Petitioner establishes that claims 10–12 would have been obvious over Teigen and Grey by a preponderance of the evidence.

F. Asserted Obvioussness of Claims 2, 3, 6–9, and 18 In View of Teigen, Grey, And Rubenstein

Petitioner contends that the subject matter of claims 2, 3, 6–9, and 18 of the '883 patent are obvious over the disclosure of Teigen in view of Grey

and Rubenstein. Pet. 63–69. Patent Owner disputes Petitioner's contentions. PO Resp. 50–57. Because we find that Petitioner has shown by a preponderance of evidence that claims 2, 3, 6–9, and 18 of the '883 patent would have been obvious over Teigen and Grey, we need not reach this ground. *See SAS Inst. Inc. v. Iancu*, 138 S. Ct. 1348, 1359 (2018) (holding that a petitioner "is entitled to a final written decision addressing all of the claims it has challenged"); *Bos. Sci. Scimed, Inc. v. Cook Grp. Inc.*, 809 F. App'x 984, 990 (Fed. Cir. 2020) (non-precedential) (recognizing that the "Board need not address issues that are not necessary to the resolution of the proceeding" and, thus, agreeing that the Board has "discretion to decline to decide additional instituted grounds once the petitioner has prevailed on all its challenged claims").

G. Asserted Obviousness of Claims 13 and 14 Over Teigen in View of Grey and Yang

Petitioner contends that the subject matter of claims 13 and 14 of the '883 patent are obvious over the disclosures of Teigen in view of Grey and Yang. Pet. 69–73. Other than the arguments regarding the combination of Teigen and Grey discussed above, Patent Owner does not dispute Petitioner's contentions. *See generally* PO Resp. We review the evidence presented by Petitioner at pages 69–73 of the Petition, which we adopt.

1. Yang (Ex. 1012)

Yang, titled "Telescoping Neurovascular Catheter with Active Distal Tip," is directed to a telescoping catheter for "distal neurovascular aspiration or access" including a control for advancing the distal section into the patient's vasculature. Ex 1012, codes (54), (57), Figs. 1, 3A, 3B. The

catheter can connect to "a controller for applying intermittent vacuum to the lumen" using combinations of vacuum pulses and "spaces of neutral pressure," higher negative pressure or lower negative pressure. *Id.* ¶ 14, Figs. 14, 25A–C. Yang also discloses ranges of catheter inner diameters. *Id.* ¶ 68.

Yang was published on August 4, 2017 and Petitioner contends that it qualifies as prior art at least under §102(a)(1) because it was published prior to the effective filing date of the '883 Patent. Ex. 1012, code (43); Pet. 19. Patent Owner does not contest that Yang is prior art to the '883 patent.

2. Analysis

Claim 13 of the '883 patent provides "[t]he system according to claim 1, wherein: the lumen has an internal diameter of between approximately 0.038" and approximately 0.106"; and the controller is configured to cyclically open and close the vacuum valve and the vent valve at a frequency of between 2 and 16 Hz." Ex. 1001, 56:16–21. Claim 14 is nearly identical but recites "an internal diameter of between approximately 0.068" and approximately 0.088"" *Id.* at 56:22–27.

Petitioner describes Teigen's disclosures related to its catheter's internal lumen and how to switch between different catheter sizes. Pet. 71 (citing Ex. 1007, 3:33–59, 6:6–21; 12:31–39, 14:15–27; Ex. 1005 ¶¶ 295–297; Ex. 1023 ¶¶ 13–14). Petitioner summarizes that "Yang is directed to a telescoping catheter for 'distal neurovascular aspiration or access.'" *Id.* Petitioner demonstrates that Yang discloses the inner diameter of the catheter to be "between about 0.030 inches and about 0.112 inches." *Id.* at 71–72 (citing Ex. 1012 ¶ 68; Ex. 1005 ¶¶ 291–292). Petitioner then

incorporates its discussions from claim 8 regarding frequency here. Petitioner also provides arguments regarding motivation to combine Teigen, Grey, and Yang, which we find persuasive. Pet. 69–70.

Thus, after carefully considering the arguments and evidence, we determine that Petitioner has shown by a preponderance of evidence that claims 13 and 14 of the '883 patent would have been obvious over Teigen, Grey, and Yang.

H. Asserted Obviousness of Claim 17 over Teigen in view of Grey and Matteo

Petitioner contends that the subject matter of claim 17 of the '883 patent is obvious over the disclosures of Teigen in view of Grey and Matteo. Pet. 73–78. Other than the arguments regarding the combination of Teigen and Grey discussed above, Patent Owner does not dispute Petitioner's contentions. *See generally* PO Resp. We review the evidence presented by Petitioner at pages 73–78 of the Petition, which we adopt.

1. Matteo (Ex. 1013)

Matteo, titled "Multi-Function Eccentrically Actuated Microvalves and Micropumps," is directed to a microfluidics system with "one cylindrical cam controlling several actuator balls and several microvalves" for use in various chemical, biological, and biomedical applications, including "medical and scientific instrumentation." Ex. 1013, codes (65), (57) ¶¶ 6, 12, 29, Figs. 11, 12. Matteo discloses that "[c]am-driven pinch-style microvalves are useful for serving as on/off valve devices for a microfluidic system." *Id.* ¶ 10. Matteo teaches that "[a] cam-driven actuator activates a microvalve by pressing on the elastomeric layer, deforming the

elastomeric layer so that it meets a second layer at a location within the channel, thereby either partially or completely obstructing the flow of liquid through the channel at that location, i.e. 'pinching' the channel." *Id.* at code (57).

Matteo was published on June 7, 2012 and Petitioner contends that it qualifies as prior art at least under §102(a)(1) because it was published prior to the effective filing date of the '883 Patent. Ex. 1013, 1; Pet. 20. Patent Owner does not contest that Matteo is prior art to the '883 patent.

2. Analysis

Claim 17 provides "[t]he system according to claim 1, which further comprises a shaft and the vacuum valve and the vent valve are mounted together on the shaft." Ex. 1001, 56:37–39.

Petitioner demonstrates that Matteo discloses microfluidics systems "to control multiple microvalves" and that an exemplary embodiment includes "one cylindrical cam controlling several actuator balls and several microvalves." Pet. 75 (citing Ex. 1013, Abstract, ¶¶ 6, 12, 29, Figs. 11, 12). Matteo further discloses that "[c]am-driven pinch-style microvalves are useful for serving as on/off valve devices for a microfluidic system." *Id.* at 75–76 (citing Ex. 1013 ¶ 10). Petitioner also contends that Matteo teaches that "a single cam, controlled by ***a single position-control mechanism, is able to control multiple microvalves***." *Id.* at 78 (citing Ex. 1013, Abstract, ¶¶ 10, 11, Figs. 11, 12). We credit the testimony of Mr. Brown that, a POSA "would therefore recognize the disclosures of the 'single cam, controlled by a single position-control mechanism' in Matteo to be a shaft with mounted valves because the cam disclosed in Matteo is used to move the cam

actuators in and out of position to open and close their respective valves." Ex. 1005 ¶ 311. Petitioner, with supporting testimony from Mr. Brown concludes that, "[i]t would have been obvious for a POSA and required no undue experimentation to implement the valve operations and controls taught by Teigen and Grey with the cam-driven valves disclosed in Matteo to achieve the desired dynamic aspiration." *Id.* (citing Ex. 1005 ¶ 311).

Petitioner also asserts several reasons why it would have been obvious to combine Teigen, Grey, and Matteo, which we find persuasive. Pet. 73–75. Upon review of the arguments and supporting evidence, we determine that Petitioner persuasively explains why a POSA would have found it an obvious design choice, when implementing the combination of Teigen and Grey, to place the vacuum and vent valves together on a shaft, as taught in Matteo. *See* Pet. 73–75. Thus, after carefully considering the arguments and evidence, we determine that Petitioner has shown by a preponderance of evidence that claim 17 of the '883 patent would have been obvious over Teigen, Grey, and Matteo.

III. CONCLUSION[15]

Petitioner establishes by a preponderance of the evidence that claims 1–18 of the '883 patent are unpatentable as follows.

---

[15] Should Patent Owner wish to pursue amendment of the challenged claims in a reissue or reexamination proceeding subsequent to the issuance of this decision, we draw Patent Owner's attention to the April 2019 *Notice Regarding Options for Amendments by Patent Owner Through Reissue or Reexamination During a Pending AIA Trial Proceeding*. *See* 84 Fed. Reg. 16,654 (Apr. 22, 2019). If Patent Owner chooses to file a reissue application or a request for reexamination of the challenged patent, we remind Patent Owner of its continuing obligation to notify the Board of

Claims	35 U.S.C. §	Reference(s)/Basis	Claims Shown Unpatentable	Claims Not Shown Unpatentable
1–12, 15, 16, 18	103(a)	Teigen, Grey	1–12, 15, 16, 18	
13, 14	103(a)	Teigen, Grey, Yang	13, 14	
17	103(a)	Teigen, Grey, Matteo	17	
Overall Outcome			1–18	

IV. ORDER

In consideration of the foregoing, it is hereby:

ORDERED that claims 1–18 of the ’883 patent have been proven to be *unpatentable*; and

FURTHER ORDERED that because this is a Final Written Decision, parties to the proceeding seeking judicial review of the Decision must comply with the notice and service requirements of 37 C.F.R. § 90.2.

---

any such related matters in updated mandatory notices. *See* 37 C.F.R. § 42.8(a)(3), (b)(2).

For PETITIONER:

Eliot D. Williams
Jeremy Taylor
BAKER BOTTS L.L.P.
eliot.williams@bakerbotts.com
jeremy.taylor@bakerbotts.com

For PATENT OWNER:

Lori a. Gordon
Paul T. Parker
PERKINS COIE LLP
gordon-ptab@perkinscoie.com
parker-ptab@perkinscoie.com