UNITED STATES INTERNATIONAL TRADE COMMISSION

Washington, D.C.

In the Matter of **CERTAIN COMPACT WALLETS AND COMPONENTS THEREOF**	**Inv. No. 337-TA-1355**

ORDER NO. 14: CONSTRUING CERTAIN CLAIM TERMS

(August 21, 2023)

TABLE OF CONTENTS

I. INTRODUCTION 1

II. RELEVANT LAW 2

III. U.S. PATENT NO. 10,791,808 3

IV. LEVEL OF ORDINARY SKILL 6

V. CLAIM CONSTRUCTION 6
- A. Construction of the Agreed-Upon Claim Terms 6
- B. Construction of the Disputed Claim Terms 7
  - 1. "interposed" 7
  - 2. "minimal silhouette" 11
  - 3. "minimize the profile" 14

I. INTRODUCTION

The Commission instituted this investigation to determine, among other things, whether certain compact wallets and components thereof infringe U.S. Patent No. 10,791,808 ("the '808 patent"). *See* 88 Fed. Reg. 16,030-031 (Mar. 15, 2023).[1]

The Ridge Wallet LLC ("Ridge") is the Complainant. The Participating Respondents are Shenzhen Swztech Co., Ltd. d/b/a SWZA ("SWZA"), Shenzhen Pincan Technology Co., Ltd. d/b/a ARW (collectively, "ARW/SWZA"), and Mosaic Brands, Inc.[2] ("Mosaic").[3] The Commission Investigative Staff ("Staff") is also a party to the investigation.[4]

I held a *Markman* hearing on June 21, 2023.[5] On June 23, 2023, the Parties filed their Joint Claim Construction Chart.[6] *See* EDIS Doc. ID 799261.

[1] The plain language description of the accused products is "two multi-piece panels held together with rivets, where the two panels are connected and urged toward one another with an elastic band." 88 Fed. Reg. 16,031.
[2] Ridge and Mosaic have reached a settlement in principle. EDIS Doc. ID 800731. They anticipate filing a motion to terminate as to Mosaic once the agreement is finalized. *Id*.
[3] Two respondents—INSGG and Rosemar Enterprise LLC d/b/a Ross M—have been found in default. *See* Order No. 12 (July 11, 2023), *not reviewed*, Comm'n Notice (July 28, 2023).
[4] Ridge, ARW/SWZA, and Staff will be collectively referred to herein as the "Parties."
[5] The transcript of the hearing is referred to herein as "CC Tr." *See* EDIS Doc. ID 799106.
[6] For convenience, the briefs and chart submitted by the Parties are referred to hereafter as:

CMIB	Ridge's Initial *Markman* Brief
CMRB	Ridge's Reply *Markman* Brief
RMIB	ARW/SWZA's Initial *Markman* Brief
RMRB	ARW/SWZA's Reply *Markman* Brief
SMIB	Staff's Initial *Markman* Brief
SMRB	Staff's Rebuttal *Markman* Brief
JC	Joint Proposed Claim Construction Chart

II. RELEVANT LAW

"An infringement analysis entails two steps. The first step is determining the meaning and scope of the patent claims asserted to be infringed. The second step is comparing the properly construed claims to the device accused of infringing." *Markman v. Westview Instruments, Inc.*, 52 F.3d 967, 976 (Fed. Cir. 1995) (*en banc*) (internal citations omitted), *aff'd*, 517 U.S. 370 (1996). Claim construction resolves legal disputes between the parties regarding claim scope. *See Eon Corp. IP Holdings v. Silver Spring Networks*, 815 F.3d 1314, 1319 (Fed. Cir. 2016).

Evidence intrinsic to the application, prosecution, and issuance of a patent is the most significant source of the legally operative meaning of disputed claim language. *See Bell Atl. Network Servs., Inc. v. Covad Commc'ns Grp., Inc.*, 262 F.3d 1258, 1267 (Fed. Cir. 2001). The intrinsic evidence includes the claims themselves, the specification, and the prosecution history. *See Phillips v. AWH Corp.*, 415 F.3d 1303, 1314 (Fed. Cir. 2005) (*en banc*); *see also Markman*, 52 F.3d at 979. As the Federal Circuit explained in *Phillips*, courts examine the intrinsic evidence to determine the "ordinary and customary meaning of a claim term" as understood by a person of ordinary skill in the art at the time of the invention. *Phillips*, 415 F.3d at 1313.

"[T]he claims themselves provide substantial guidance as to the meaning of particular claims terms." *Id.* at 1314; *see Interactive Gift Express, Inc. v. Compuserve Inc.*, 256 F.3d 1323, 1331 (Fed. Cir. 2001) ("In construing claims, the analytical focus must begin and remain centered on the language of the claims themselves, for it is that language that the patentee chose to use to 'particularly point[ ] out and distinctly claim[ ] the subject matter which the patentee regards as his invention.'"). The context in which a term is used in an asserted claim can be "highly instructive." *Phillips*, 415 F.3d at 1314. Additionally, other claims in the same patent, asserted or un-asserted, may also provide guidance as to the meaning of a claim term. *Id.*

The specification "is always highly relevant to the claim construction analysis. Usually, it is dispositive; it is the single best guide to the meaning of a disputed term." *Phillips*, 415 F.3d at 1315 (quoting *Vitronics Corp. v. Conceptronic, Inc.*, 90 F.3d 1576, 1582 (Fed. Cir. 1996)). "[T]he specification may reveal a special definition given to a claim term by the patentee that differs from the meaning it would otherwise possess. In such cases, the inventor's lexicography governs." *Id.* at 1316. "In other cases, the specification may reveal an intentional disclaimer, or disavowal, of claim scope by the inventor." *Id*. As a general rule, however, the particular examples or embodiments discussed in the specification are not to be read into the claims as limitations. *Id.* at 1323. In the end, "[t]he construction that stays true to the claim language and most naturally aligns with the patent's description of the invention will be . . . the correct construction." *Id.* at 1316 (quoting *Renishaw PLC v. Marposs Societa' per Azioni*, 158 F.3d 1243, 1250 (Fed. Cir. 1998)).

Extrinsic evidence is generally viewed as less reliable than the patent itself and its prosecution history in determining how to define claim terms. *Phillips*, 415 F.3d at 1318. "The court may receive extrinsic evidence to educate itself about the invention and the relevant technology, but the court may not use extrinsic evidence to arrive at a claim construction that is clearly at odds with the construction mandated by the intrinsic evidence." *Elkay Mfg. Co. v. Ebco Mfg. Co.*, 192 F.3d 973, 977 (Fed. Cir. 1999).

III. U.S. PATENT NO. 10,791,808

The '808 patent, titled "Compact Wallet," issued on October 6, 2020, and names Daniel Kane as the inventor. '808 patent at cover page. The '808 patent is directed to a "compact wallet designed to present a minimal silhouette in a shirt, pants or purse pocket." *Id*.; *see also id*. at 1:14-15 ("This invention relates to billfold wallets, and more particularly to low-profile wallets for credit cards.").

The ’808 patent has 24 claims. Ridge asserts claims 1–4, 9, and 12–17 in this investigation. The asserted claims read as follows (with the first instance of the agreed-upon terms in *italics* and the first instance of the disputed terms highlighted in **bold**):

1. A compact wallet, comprising:

   at least two rigid plates **interposed** to sandwich card-like contents there between, each rigid plate having a longitudinal extent;

   at least one encircling elastic band interposed with the at least two rigid plates along longitudinal extents thereof to bias them inwardly and securely hold the card-like contents while providing elastic volume there between for adding or removing contents;

   a *channeling means* configured to **minimize the profile** of the wallet and hold position of the at least one encircling elastic band with respect to each rigid plate while allowing freedom for the dynamic extension and contraction of the band over the entire running length thereof; and

   an *auxiliary feature* removably attached to at least one of the at least two rigid plates, the auxiliary feature having a tang insertable into a recess formed inside the at least two rigid plates, the tang having a *hook*, the hook extending to an angle to the tang, the hook engaging an *undercut* of the recess to prevent inadvertent dislodgement of the auxiliary feature from the recess,

   whereby, card-like contents may be carried with **minimal silhouette** on or with a person while allowing expandable capacity and ready access to individual contents from between the at least two rigid plates.

2. The compact wallet of claim 1, wherein the channeling means is a longitudinal groove in a first lamina of a laminate construction of each rigid plate, the groove slidingly receiving one part of the at least one encircling elastic band.

3. The compact wallet of claim 2, wherein a second lamina of the laminate construction of each rigid plate is removably attached to the first lamina to hold the at least one elastic band in capture and provide a smooth surface for glide purposes.

4. The compact wallet of claim 3, wherein the second lamina is attached to the first lamina by screws.

9. The compact wallet of claim 1, further comprising a first elastic strap positioned over the ends of the at least two rigid plates transverse to the longitudinal extends, the positioning functioning to retain the card-like contents from that end.

12. The compact wallet of claim 1, further comprising aligned finger notches through proximal ends of the rigid plates to expose an edge of the card-like contents for the purpose of pushing the edge to elevate the contents into view through distal ends of the rigid plates, said edge providing a fulcrum to lever the proximal ends together for the purpose of fanning the distal ends apart in display of the contents.

13. The compact wallet of claim 1, wherein the encircling elastic band is comprised of woven elastic fabric.

14. A compact wallet, comprising:

    at least two rigid plates interposed to sandwich card-like contents there between, each rigid plate having a groove along a longitudinal extent thereof;

    at least one encircling elastic band slidingly interposed in the grooves to bias the at least two rigid plates inwardly and securely hold the card-like contents while providing elastic volume there between for adding or removing contents, the grooves configured to hold position of the at least one encircling elastic band with respect to each rigid plate while allowing freedom for the dynamic extension and contraction of the band over the entire running length thereof;

    a recess formed inside at least one of the at least two rigid plates, the recess operable to receive a tang of an auxiliary feature, the recess having an undercut operable to engage a hook of the tang to prevent inadvertent dislodgement of the auxiliary feature from the recess when the auxiliary feature is removably positioned in at least one of the at least two rigid plates, the hook extending at an angle to the tang,

    whereby, card-like contents may be carried with minimal silhouette on or with a person while allowing expandable capacity and ready access to individual contents from between the at least two rigid plates.

15. The compact wallet of claim 14, wherein the groove is in a first lamina of a laminate construction of each rigid plate, the groove slidingly receiving one part of the at least one encircling elastic band.

16. The compact wallet of claim 15, wherein a second lamina of the laminate construction of reach rigid plate is removably attached to the first lamina to capture the at least one elastic band and provide a smooth surface for glide.

17. The compact wallet of claim 16, wherein the second lamina is attached to the first lamina by screws.

IV. LEVEL OF ORDINARY SKILL

ARW/SWZA asserts that a person of skill in the art in the field of compact wallets would have a "technical degree (e.g., Bachelor of Science in engineering) with some experience in analyzing, designing, or creating mechanical devices such as wallets." RMIB at 2 (citing RMIB Ex. A, Declaration of Kimberly K. Cameron ("Cameron Decl.")).

Ridge agrees with ARW/SWZA's proposal. CMIB at 8 ("[T]here is no meaningful dispute as to the governing level of ordinary skill in the art."). Staff does not dispute the Private Parties' definition of a person of ordinary skill in the art. SMIB at 3.

Accordingly, I find that a person of ordinary skill in the art at the time of the '808 patent would have at least a bachelor's degree in engineering or related fields, and some experience working in analyzing, designing, or creating mechanical devices such as wallets. More education (*e.g.*, a Master's degree) or work experience in the relevant field may compensate for a deficit in one of the relevant qualifications stated above.

V. CLAIM CONSTRUCTION[7]

A. Construction of the Agreed-Upon Claim Terms

The Parties have agreed to the following constructions:

Claim Term	Agreed Construction
"channeling means" (claim 1)	Function: "to minimize the profile of the wallet and hold position of the at least one encircling elastic band with respect to each rigid plate while allowing freedom of the dynamic extension and contraction of the band over the entire running length thereof"

[7] In support of their respective claim construction positions, Ridge submitted the declaration of Dr. Thomas Kurfess (CMIB Ex. 3, Declaration of Dr. Thomas R. Kurfess ("Kurfess Decl.")), and ARW/SWZA submitted the declaration of Dr. Kimberly K. Cameron.

Claim Term	Agreed Construction
	Structure: "a groove spanning the extent of one or more of the rigid plates or a longitudinal bore through one or more of the rigid plates"
"auxiliary feature" (claim 1, 14)	Plain and ordinary meaning
"undercut" (claims 1, 14)	Plain and ordinary meaning
"hook" (claims 1, 14)	Plain and ordinary meaning

JC at 1-2. I hereby adopt the Parties' proposed constructions and shall construe the terms set forth above according to their agreed-to definitions.

B. Construction of the Disputed Claim Terms[8]

1. "interposed"

The term "interposed" appears in claims 1 and 14 of the '808 patent. The Parties disagree on the claim construction of this term and have proposed the following constructions:

Complainant and Staff	Respondents SWZA and ARW
Plain and ordinary meaning	Indefinite

ARW/SWZA assert that this term is indefinite because it "fails to inform, with reasonable certainty, a skilled artisan about what objects the two rigid plates are inserted into and/or where the two rigid plates should be placed between." RMRB at 2. Specifically, they contend that "it is not clear whether the rigid plates are interposed with the elastic band or the elastic band is interposed with the rigid plates." *Id*. at 3.

Ridge and Staff disagree. Ridge submits that the patent uses the term in its plain and ordinary sense. CMIB at 8. Ridge explains that in claim 1, "interposed" is used to describe the relative positioning of the at least two rigid plates. *Id*. According to Ridge, the specification uses the term in a similar manner—to describe the relative relationship between two physical

[8] Mosaic did not submit an opening claim construction brief. While Mosaic originally agreed with Ridge and Staff that the disputed terms should be given their plain and ordinary meaning, Mosaic later stated that it would be joining ARW/SWZA's indefiniteness arguments. CC Tr. at 13:21-14:1.

(mechanical) structures. *Id*. Ridge therefore asserts that the specification and claims "inform a definite understanding of what 'interposed' means," by detailing . . . the various structures that are described as 'interposed' with other structures." *Id*. at 9. Staff agrees with Ridge, stating: "[T]he term 'interposed' as used in the claims and specification is always used to describe one thing positioned in between other things." SMIB at 5.

Section 112 of the Patent Act requires that the specification "shall conclude with one or more claims particularly pointing out and distinctly claiming the subject matter which the applicant regards as his invention." 35 U.S.C. § 112 ¶ 2. The Supreme Court has interpreted that section to require "that a patent's claims viewed in light of the specification and prosecution history inform those skilled in the art about the scope of the invention with reasonably certainty." *Nautilus, Inc. v. Biosig Instruments, Inc.*, 572 U.S. 898, 901 (2014). A claim is required to "provide objective boundaries for those of skill in the art," and a claim term is indefinite if it "might mean several different things and no informed and confident choice is among the contending definitions." *Interval Licensing LLC v. AOL, Inc.*, 766 F.3d 1364, 1371 (Fed. Cir. 2014). "The definiteness requirement thus 'mandates clarity, while recognizing that absolute precision is unattainable.'" *Niazi Licensing Corp. v. St. Jude Med. S.C., Inc.*, 30 F.4th 1339, 1347 (Fed. Cir. 2002) (quoting *Nautilus*, 572 U.S. at 910). It is Respondents' burden to prove by clear and convincing evidence that a patent claim is invalid because it is indefinite. *See Nautilus*, 572 U.S. at 912 n.10 (citing *Microsoft Corp. v. i4i Ltd. P'ship*, 564 U.S. 91, 95 (2011)).

ARW/SWZA concedes that "interposed" has a meaning, which is "placed between." RMIB at 6; *see also* CC Tr. at 14:13-15 ("the word 'interposed,' even though 'interposed' is a very common term where it's used to describe something that's placed between."); Cameron Decl., ¶ 19. What ARW/SWZA argues is not clear is what the two rigid plates are required to be placed

between. RMRB at 2. They also assert that it is not clear whether the encircling elastic band in the second clause of claim 1 is between the two rigid plates or the two rigid plates are between the encircling elastic band. *Id*. at 3-4.

Claims 1 and 14 recite "at least two rigid plates ***interposed to sandwich*** card-like contents ***there between***." '808 patent, cls. 1, 14 (emphasis added). Claim 1 also recites "at least one encircling elastic band ***interposed with*** the at least two rigid plates." *Id*. at cl. 1 (emphasis added). In both instances, "interposed" is used to describe one thing being positioned in between other things—namely, the card-like contents and the elastic band being positioned between at least two rigid plates. Thus, the claim language itself provides "an objective baseline through which to interpret the claims." *Sonix Tech. Co. v. Publ'ns Int'l, Ltd.*, 844 F.3d 1370, 1378 (Fed. Cir. 2017).

The specification provides similar guidance. It consistently uses the word "interposed" to describe the card-like contents and the elastic band as being positioned between at least two rigid plates. *See, e.g.*, '808 patent at 2:41-50 ("These objects, and others to become hereinafter apparent, are embodied in a compact wallet comprising, in a first element, at least two rigid plates interposed to sandwich card-like contents there between. . .. A second element is at least one encircling elastic band interposed with the at least two rigid plates, over the longitudinal extents thereof, to bias them inwardly and securely hold the card-like contents."), 3:58-61 ("Referring to FIGS. 1 and 2, a compact wallet 1 is comprised of at least two rigid plates 10, serving as 'book-ends' as it were, with one or more card-like contents 2 sandwiched between them. The sandwiched composite is bound by at least one encircling elastic band 4. The encircling elastic band 4 holds the card-like contents 2 securely by means of compression, while also expanding elastically to open space between the rigid plates 10."), 4:9-15 ("Referring to FIGS. 2 to 9, the channeling means 20 of the preferred embodiment is a longitudinal groove 21 spanning a longitudinal extent 3 of each rigid

plate 10. The longitudinal groove 21 is of such ample dimension to receive a corresponding part of the encircling elastic band 4 and allow it to slidingly expand and contract freely while holding position there within."). Figure 11 illustrates such a configuration:

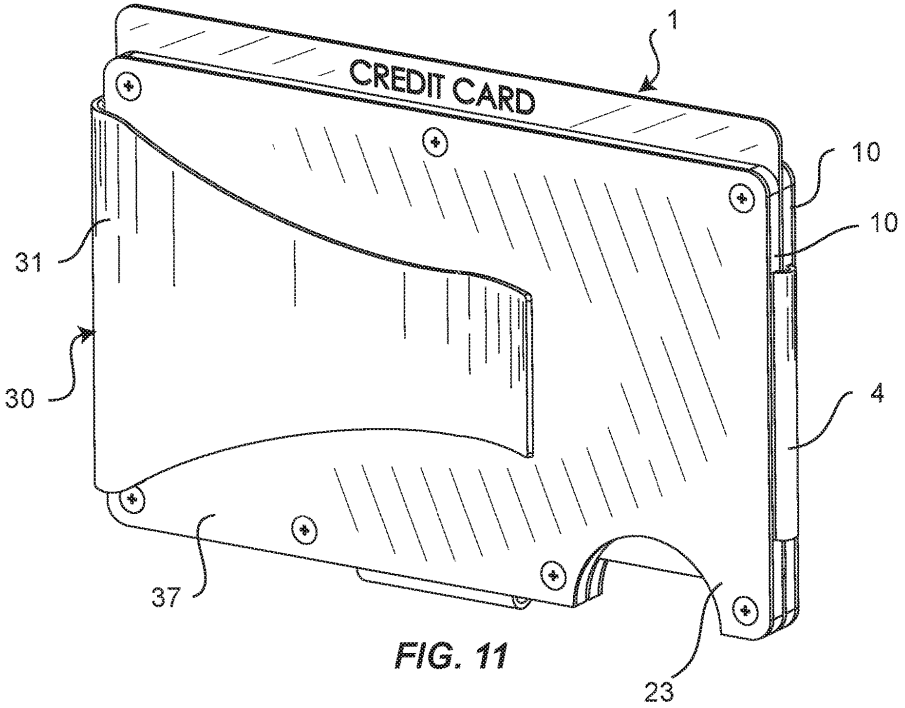

FIG. 11

Id. at Fig. 11; *see also* Figs. 1, 6, 10.

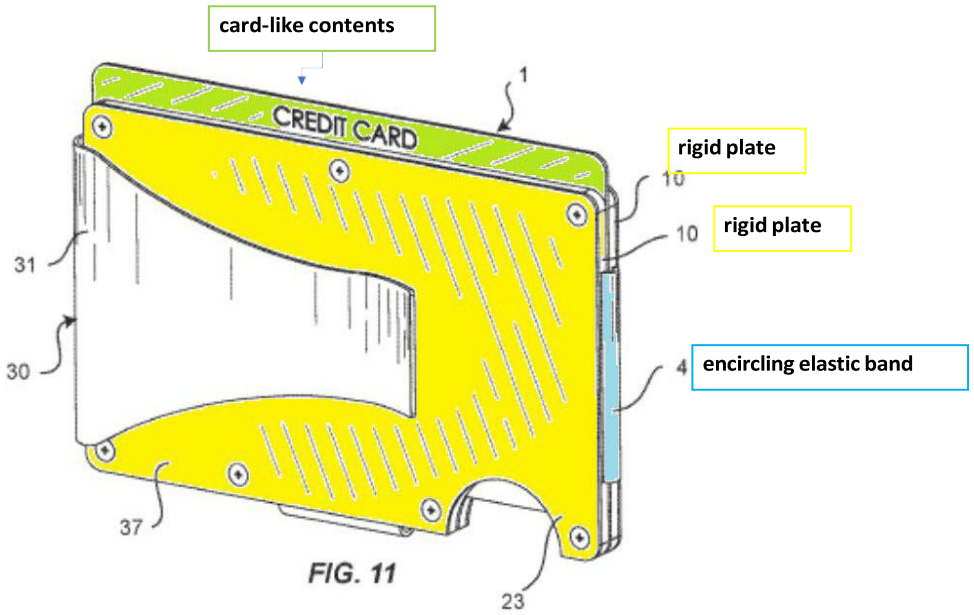

FIG. 11

SMIB at 6 (annotated version of Fig. 11). Notably, ARW/SWZA's expert does not dispute that the specification describes a credit card as being interposed between the two rigid plates. *See* CMRB Ex. 1, Video Deposition of Kimberly Cameron ("Cameron Dep. Tr.") at 47:22-48:1. Nor does she dispute that the specification discloses an elastic band between the rigid plates. Cameron Decl., ¶ 20.

Considering the above, I find it "difficult to believe" that a person with a B.S. in engineering who has read the specification and relevant claim language "would be unable to determine with reasonable certainty" the scope of claims 1 and 14. *Tinnus Enterprises, LLC v. Telebrands Corp.*, 846 F.3d 1190, 1206 (Fed. Cir. 2017). It is also "highly relevant that the examiner understood this [term] throughout prosecution." *Niazi Licensing*, 30 F.4th at 1347-1348. The Examiner did not express any uncertainty as to the scope of this term or have any apparent difficult in applying the term to the prior art references. *See* Kurfess Decl., Ex. 3. I therefore find that the intrinsic evidence sufficiently informs a skilled artisan to the meaning of "interposed" as used in the '808 patent.

Accordingly, in this investigation, the term "interposed" will be given its plain and ordinary meaning.

2. "minimal silhouette"

The term "minimal silhouette" appears in claims 1 and 14 of the '808 patent. The Parties disagree on the claim construction of this term and have proposed the following constructions:

Complainant and Staff	Respondents SWZA and ARW
Plain and ordinary meaning	Indefinite

ARW/SWZA argues that this term is indefinite because "it does not provide clarity as to whether the thickness direction is included." RMRB at 8. They claim that the patent discusses

"silhouette" in terms of "presenting in a 'shirt, pants, or purse pocket' which implies all three dimensions but also is discussed as the dimensions of a credit card." *Id*.

Ridge contends that the patent uses this phrase to refer to the outline of the approximately card-sized dimension of the compact wallet, which is consistent with the plain and ordinary meaning of "silhouette." CMIB at 11. Staff agrees that this term should be afforded its plain and ordinary meaning. SMRB at 6. In Staff's view, "[i]t is clear that 'silhouette' is referring to the cross section of the wallet and not the thickness, given that it recites allowing expandable capacity between the rigid plates." SMIB at 9-10.

ARW/SWZA's entire indefiniteness argument is premised on one conclusory paragraph. *See* RMIB at 10 ("Like the term 'minimize the profile', claim term 'minimal silhouette' in Claims 1, 14 and 19 is indefinite under 35 U.S.C. § 112 because it fails to inform, with reasonable certainty, a skilled artisan about what the meanings or bounds of term are, i.e., what is or is not considered a minimal silhouette."; RMRB at 8. Dr. Cameron's declaration suffers from the same flaw. Cameron Decl., ¶ 26. In her declaration, she states: "Like the term 'minimize the profile,' the term 'minimal silhouette' does not provide guidance as to the meaning (width and length versus depth) or bounds, i.e., what is or is not considered a minimal silhouette." *Id*. This is the entirety of her opinion. *See TQ Delta, LLC v. CISCO Sys., Inc.*, 942 F.3d 1352, 1358 (Fed. Cir. 2019) ("Conclusory expert testimony does not qualify as substantial evidence."); *Koito Mfg. Co. v. Turn-Key-Tech, LLC*, 381 F.3d 1142, 1152 (Fed. Cir. 2004) ("General and conclusory testimony. . . does not suffice as substantial evidence of invalidity."). These conclusory assertions are insufficient to carry ARW/SWZA's burden to show, by clear and convincing evidence, that the '808 patent claims at issue fail to inform a person of ordinary skill in the art about the scope of the invention with reasonable certainty.

Moreover, I find that Ridge and Staff are correct that the ’808 patent uses the phrase “minimal silhouette” consistent with its plain and ordinary meaning. The patent teaches that the silhouette refers to a two-dimensional area or the x- and y-axes (defined by the length and width).[9] For example, the Abstract describes the invention as:

> [A] compact wallet designed to present a minimal silhouette in a shirt, pants or purse pocket. Novel features hold the silhouette to ***the minimal dimensions of a credit card*** while affording expandability for content storage and accessibility.

’808 patent, Abstract (emphasis added); *see id*. at 2:24-28 (“It is, therefore, an object of the invention to provide a compact wallet substantially no larger than a credit card. It is a further object to maximize expandability of the wallet to accommodate multiple objects of substantially the same size.”), 2:56-60 (“With such means and in such manner, card-like contents may be carried with minimal silhouette on or with a person while allowing expandable capacity and ready access to individual contents from between the at least two rigid plates.”). This concept of the cross-section of the wallet being approximately the size of a credit card is shown in the patent’s figures, such as Figure 11 which is reproduced below:

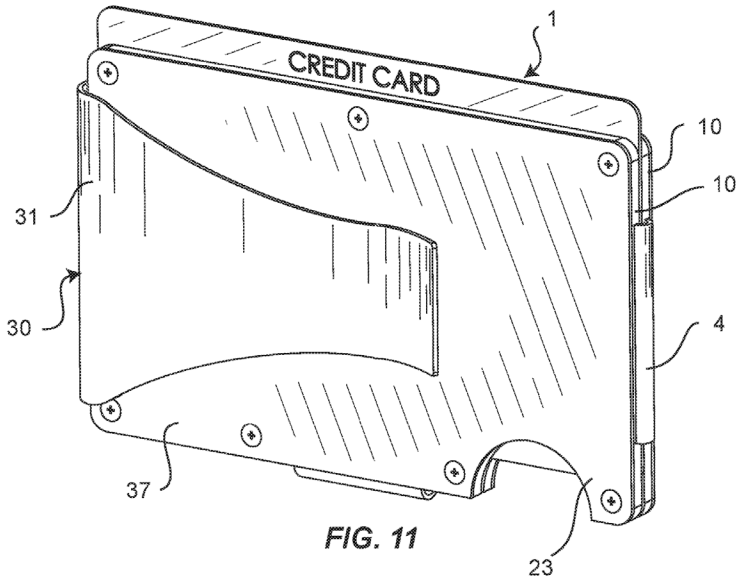

FIG. 11

[9] Thickness, on the other hand, is one-dimensional.

Id. at Fig. 11 (depicting the wallet as being only slightly larger than the "credit card"); *see also id*. at Figs. 1, 10, 13.

The claim language also uses the term in a similar manner. Claim 1 recites that "card-like contents may be carried ***with minimal silhouette*** on or with a person ***while allowing expandable capacity*** and ready access to individual contents from between the at least two rigid plates." *Id*. at cl. 1 (emphasis added). Thus, a person of skill in the art would understand that "minimal silhouette," when read in light of the specification, refers to the cross-sectional area of the wallet—*i.e.*, "the wallet's relative size to the size of a credit card held therein, and not the depth." Kurfess Decl., ¶¶ 49, 51.[10]

For the above reasons, the term "minimal silhouette" will be given its plain and ordinary meaning in this investigation.

3. "minimize the profile"

The term "minimize the profile" appears in claim 1 of the '808 patent. The Parties disagree on the claim construction of this term and have proposed the following constructions:

Complainant and Staff	Respondents SWZA and ARW
Plain and ordinary meaning	Indefinite

ARW/SWZA argues that it is "unclear whether 'configured to minimize the profile' refers to the length, width or the thickness (or some combination thereof)." RMIB at10. They write: "When combined with the description in claim 1 stating "a channeling means configured to minimize the profile of the wallet," it is highly confusing because the channeling means does not

[10] At her deposition, Dr. Cameron admitted that the dimensions of a credit card are defined by length and width, while the "expandable capacity" language in asserted claim 1 refers to the z-axis direction. Cameron Dep. Tr. at 37:18-38:7, 60:9-12.

possess such a configuration function. Overall, it is unclear how the phrase "minimize the profile" should be evaluated or what the bounds of the term is." RMRB at 17.

Ridge asserts that the specification, figures, and the claim make clear that minimizing the profile means "features are provided to allow the wallet's only additional width to be that added by the thickness of the encircling band." CMIB at 13-14. Staff concurs: "[P]rofile minimization refers to preventing the elastic band from adding more than negligible breadth to the wallet." SMIB at 8. In Staff's view, a person of ordinary skill in the art would understand that the channeling means "minimize[s] the profile" by holding the elastic band in position without adding structure to the wallet beyond the rigid plates. *Id*. (citing Kurfess Decl., ¶ 57).

I agree with Ridge and Staff that the intrinsic record informs a person of skill in the art, with reasonable certainty, of the meaning of the phrase "minimize the profile." As explained below, a skilled artisan reading the claims in light of the specification would understand that the profile refers to the footprint of the wallet and would therefore know how to evaluate what is considered minimized.

Claim 1 recites "***a channeling means***[11] configured to ***minimize the profile*** of the wallet and hold the position of the at least one encircling elastic band with respect to each rigid plate." 808 patent, cl. 1 (emphasis added). The channeling means is the structure that minimizes the profile and holds the elastic band.

> In connection with the "channeling means," the specification discloses:
> A channeling means 20 prevents the encircling elastic band 4 from adding more than negligible breadth to profile 14. This profile minimization is accomplished

[11] The Parties agree on the construction of "channeling means," and its function (*i.e.*, to minimize the profile of the wallet and hold position of the at least encircling band with respect to each rigid plate while allowing freedom for the dynamic extension and contraction of the band over the entire running length thereof." JC at 1. The Parties' agreement that the function of the channeling means is to "minimize the profile" strongly suggests that this term is readily understandable to a person of skill in the art. *See* Kurfess Decl., ¶ 61.

> by locating the channeling means 20 internally to the rigid plates 10. In other words, no structures projecting from the profile 14 are needed to fixture the encircling band 4, as in the case of prior art.

Id. at 4:2-8. In other words, minimizing the profile means adding no more than "negligible breadth" (or the thickness of an elastic band) to the wallet. As Dr. Kurfess explained, "by creating a channel or a void in the outer place structure ("rigid plates 10"), the "elastic band 4" can both serve to bias the plates toward one another while not requiring any structure beyond the footprint of the "rigid plates 10.'" Kurfess Decl., ¶ 54. This is demonstrated in Figures 7-9, which show the "channel 20 cut into one of the sub-components of a "rigid plate 10," so that the overall wallet profile is no larger than the rigid plates themselves, plus the miniscule thickness of the elastic band as it extends out of the rigid plate and around any sandwiched contents." *Id*. at ¶ 56.

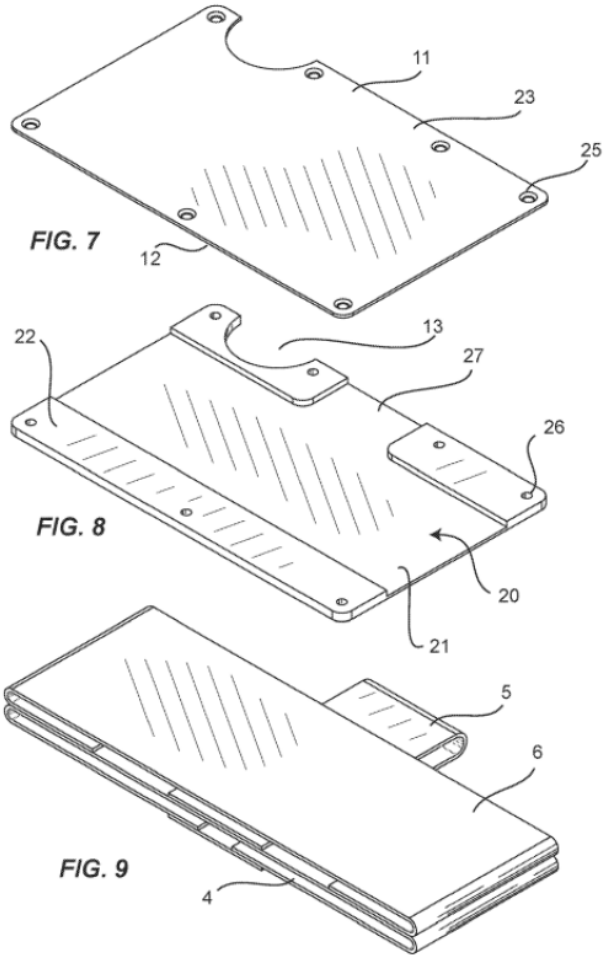

’808 patent, Figs. 7-9. At her deposition, Dr. Cameron conceded that the only thing that extends outside the footprint of the wallet is the thickness of the elastic band. Cameron Dep. Tr. at 38:18-39:22.

The specification also discloses a two-dimensional area defined as “profile 14.”[12] It states: “The rigid plates 10, and the profile 14 by definition, preferably measure approximately 8.5 cm by 5.4 cm.”. ’808 patent at 5:54-55. This is shown in the figure below:

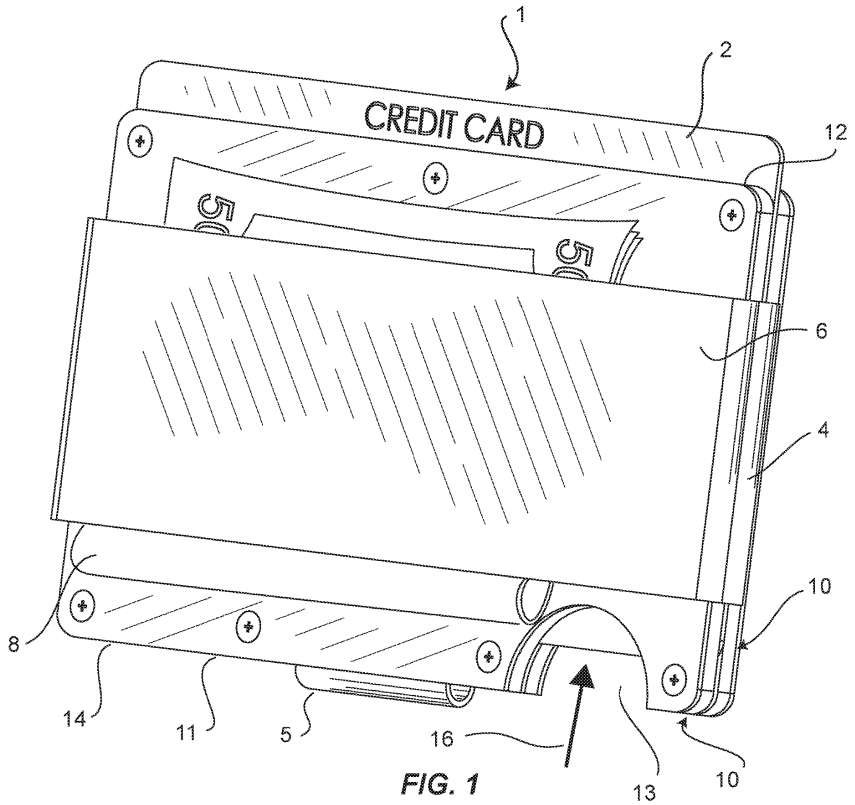

Id. at Fig. 1.

[12] ARW/SWZA agree that the specification discloses the profile of the wallet as having a length and width. RMIB at 8 (“Some places in the specification seem to indicate that profile simply means the length and width or the area of the wallet rather than thickness.”); Cameron Decl., ¶ 22.

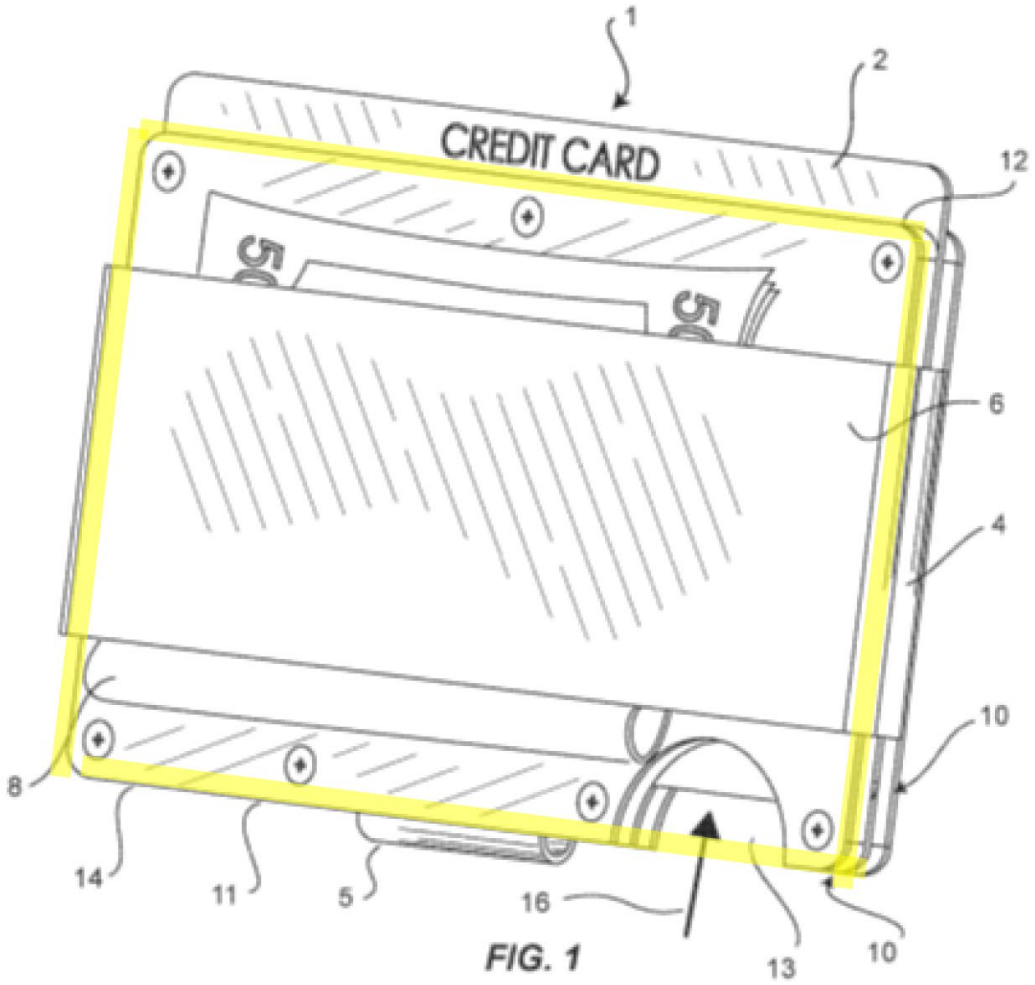

FIG. 1

SMRB at 5 (annotated version of Fig. 1). Figure 1 clearly shows the "profile" as being roughly the size of a credit card, measured by its length and width. *Id.*; *see also id*. at 1:22-24 ("Such a minimalist wallet could be easily slipped into a shirt pocket, or present a slim profile in a pants pocket or purse.") A person of skill in the art would therefore understand that the profile being minimized in the channeling means refers to footprint of the wallet (*i.e.*, the x- and y-axes), not the thickness.

For these reasons, ARW/SWZA have not shown by clear and convincing evidence that a person of ordinary skill in the art would lack reasonable certainty about the scope of the claim 1.

Accordingly, in this investigation, the term "minimize the profile" will be given its plain and ordinary meaning.

Within seven days of the date of this document, the parties shall submit to the Office of the Administrative Law Judges a joint statement as to whether they seek to have any portion of this document deleted from the public version. If the parties do seek to have portions of this document deleted from the public version, they must submit to this office a copy of this document with red brackets indicating the portion or portions asserted to contain confidential business information. The submission should be emailed by the aforementioned date and need not be filed with the Commission Secretary.

SO ORDERED.

Bryan F. Moore
Administrative Law Judge

I, Lisa R. Barton, hereby certify that the attached **ORDER** has been served via EDIS upon the Commission Investigative Attorney, **Linda Chang, Esq.**, and the following parties as indicated, on **August 21, 2023**.

Lisa R. Barton, Secretary
U.S. International Trade Commission
500 E Street, SW, Room 112
Washington, DC 20436

On Behalf of Complainant The Ridge Wallet LLC:

Benjamin E. Weed, Esq.
K&L GATES LLP
70 W Madison Street, Suite 3300
Chicago, IL 60602
Email: Benjamin.Weed@klgates.com

☐ Via Hand Delivery
☐ Via Express Delivery
☐ Via First Class Mail
☒ Other: Email Notification of Availability for Download

On Behalf of Respondent Shenzhen Swztech Co., Ltd d/b/a SWZA:

Tao Liu, Esq.
GLACIER LAW LLP
41 Madison Avenue, Suite 2529
New York, New York 10010
Email: tao.liu@glacier.law

☐ Via Hand Delivery
☐ Via Express Delivery
☐ Via First Class Mail
☒ Other: Email Notification of Availability for Download

On Behalf of Respondent ARW:

Tianyu Ju, Esq.
GLACIER LAW LLP
251 South Lake Ave Suite 910
Pasadena, California 91101
Email: iris.ju@glacier.law

☐ Via Hand Delivery
☐ Via Express Delivery
☐ Via First Class Mail
☒ Other: Email Notification of Availability for Download

On Behalf of Respondent Mosaic Brands, Inc.:

Stephen M. Lobbin, Esq.
SML AVVOCATTI P.C.
4640 Cass Street #90142

☐ Via Hand Delivery
☐ Via Express Delivery

San Diego, California 92019
Email: sml@smlavvocati.com

☐ Via First Class Mail
☒ Other: Email Notification of Availability for Download