US 20080137266A1

(19) United States

(12) Patent Application Publication

(10) Pub. No.: US 2008/0137266 A1

(43) Pub. Date: Jun. 12, 2008

Jensen et al.

(54) MOTOR CONTROL CENTER WITH POWER AND DATA DISTRIBUTION BUS

(75) Inventors: **David L. Jensen**, Barneveld, WI (US); **David D. Brandt**, New Berlin, WI (US)

Correspondence Address:
ROCKWELL AUTOMATION, INC./(FY)
ATTENTION: SUSAN M. DONAHUE, E-7F19,
1201 SOUTH SECOND STREET
MILWAUKEE, WI 53204

(73) Assignee: **Rockwell Automation Technologies, Inc.**

(21) Appl. No.: **11/540,380**

(22) Filed: **Sep. 29, 2006**

Publication Classification

(51) **Int. Cl.**
H02B 5/00 (2006.01)

(52) **U.S. Cl.** **361/602**; 710/316; 307/125

(57) **ABSTRACT**

A motor control center (MCC) is provided. The MCC includes a power and data distribution bus comprising a plurality of conductive bars for distributing power and data signals within the MCC. In one embodiment, the plurality of conductive bars is configured to receive and distribute three-phase power from an external power source. The MCC may also include a device configured to receive power and data from the plurality of conductive bars. Devices and methods for distributing power and data to such devices within an MCC are also disclosed.

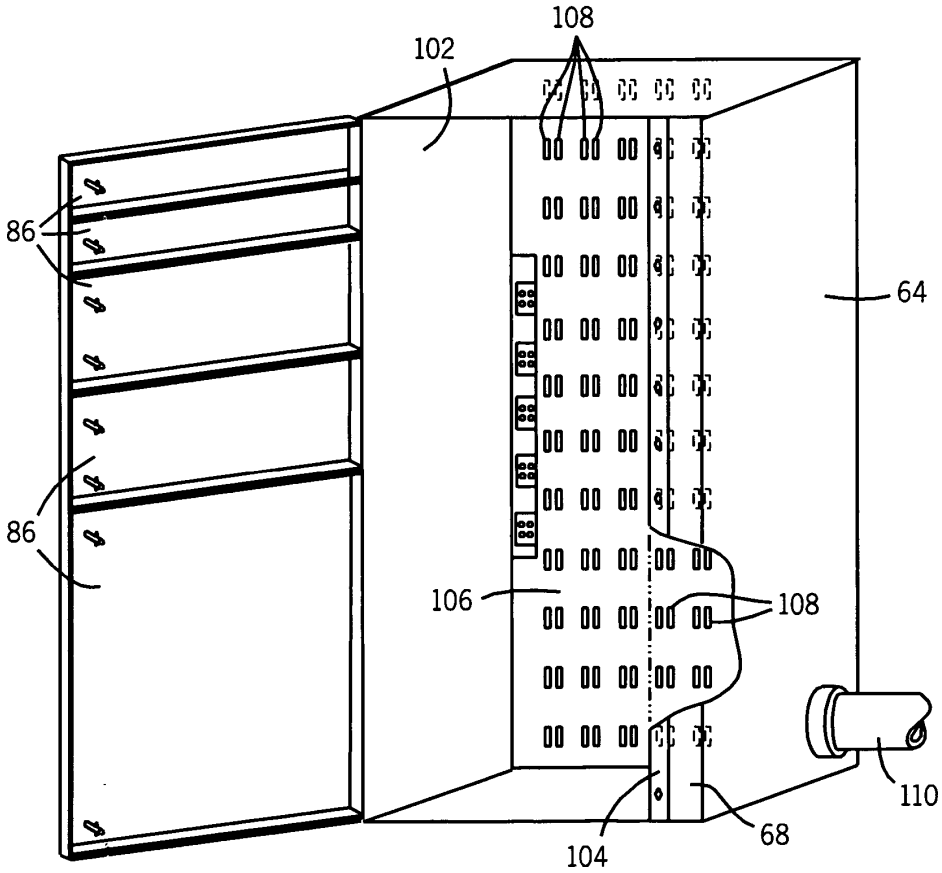

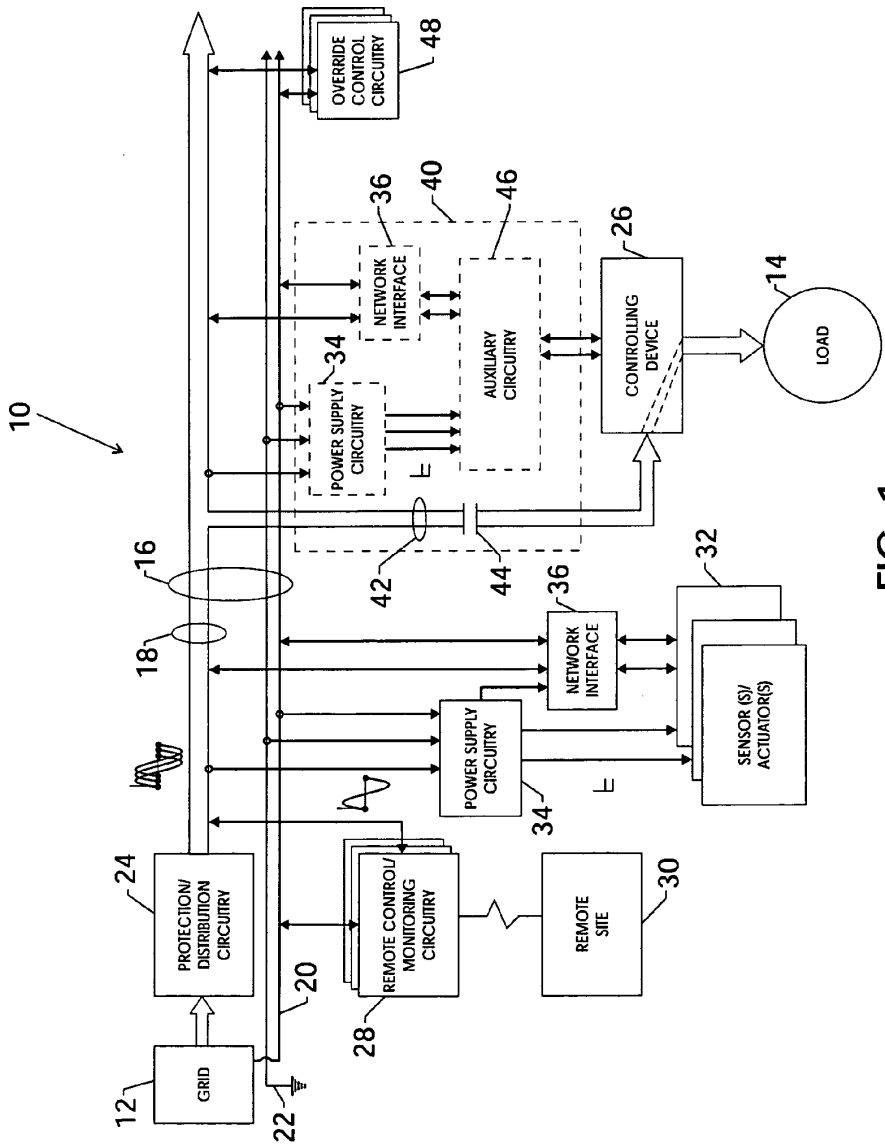
10
12
GRID
22
24
PROTECTION/ DISTRIBUTION CIRCUITRY
20
16
18
28
REMOTE CONTROL/ MONITORING CIRCUITRY
REMOTE SITE
30
POWER SUPPLY CIRCUITRY
34
NETWORK INTERFACE
36
SENSOR (S)/ ACTUATOR(S)
32
42
44
POWER SUPPLY CIRCUITRY
34
NETWORK INTERFACE
36
40
AUXILIARY CIRCUITRY
46
CONTROLLING DEVICE
26
LOAD
14
OVERRIDE CONTROL CIRCUITRY
48

FIG. 1

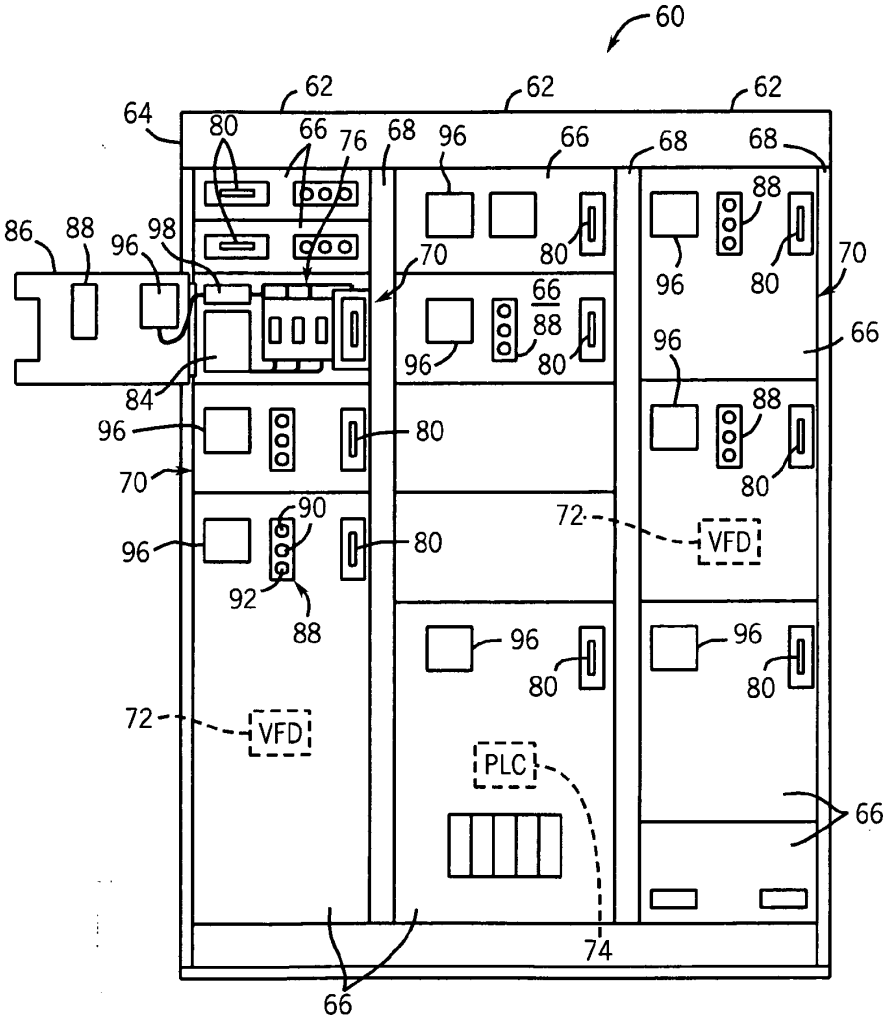
60
62
62
62
64
80
66
76
68
96
66
68
68
86
88
96
98
70
80
88
96
80
70
66
88
96
80
96
66
84
96
80
88
70
80
90
72
VFD
96
80
92
88
96
96
80
80
72
VFD
PLC
66
74
66

FIG. 2

FIG. 3

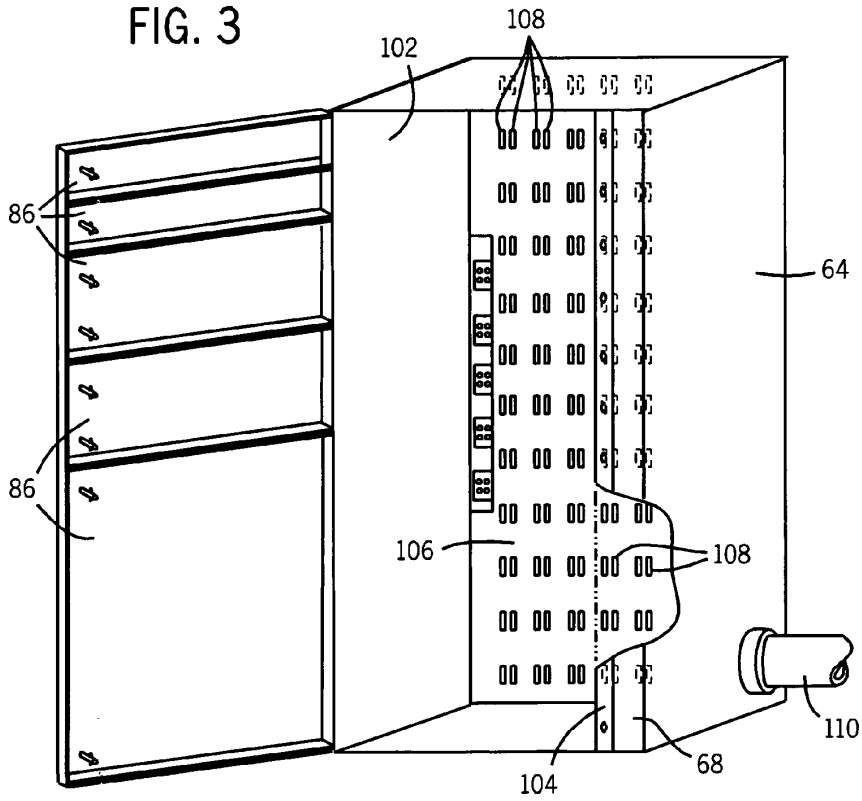

FIG. 4

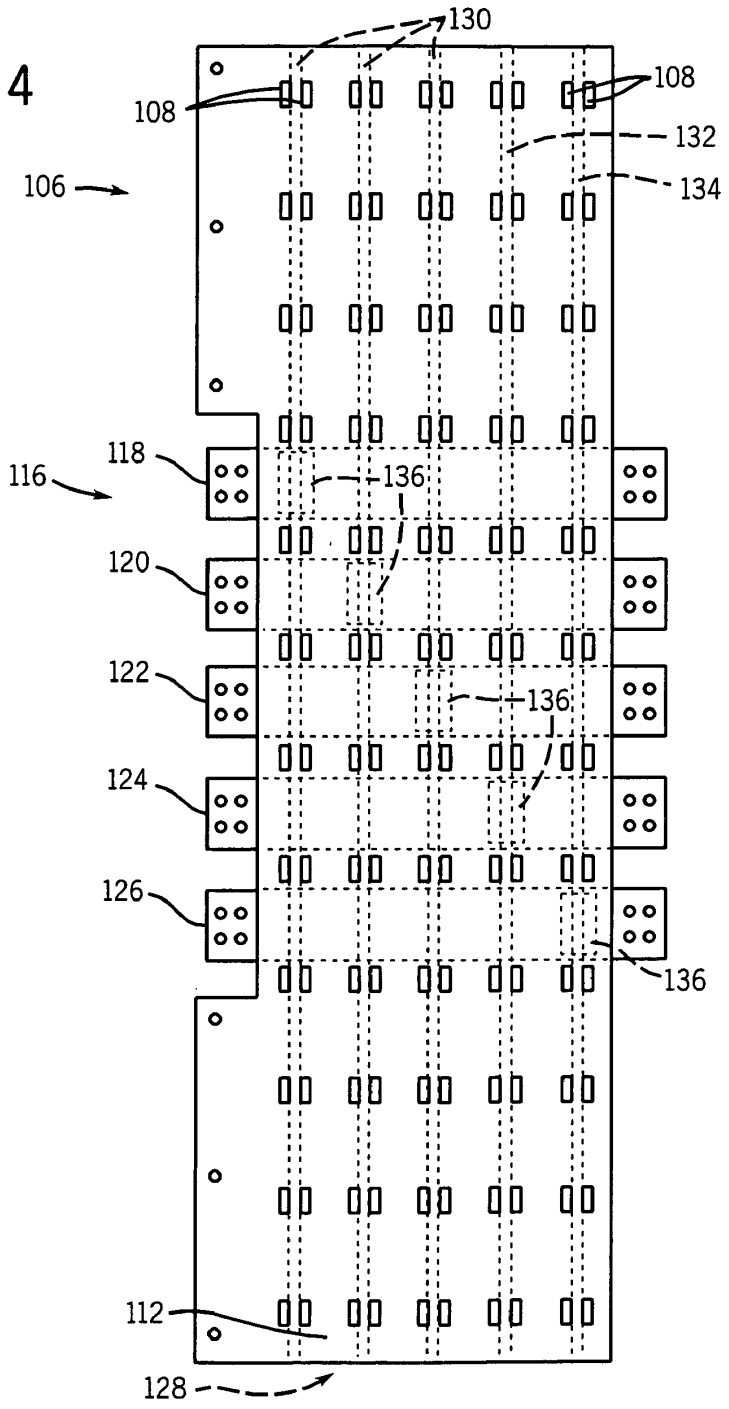
130
108
108
132
134
106
118
116
136
120
122
136
124
126
136
112
128

FIG. 5

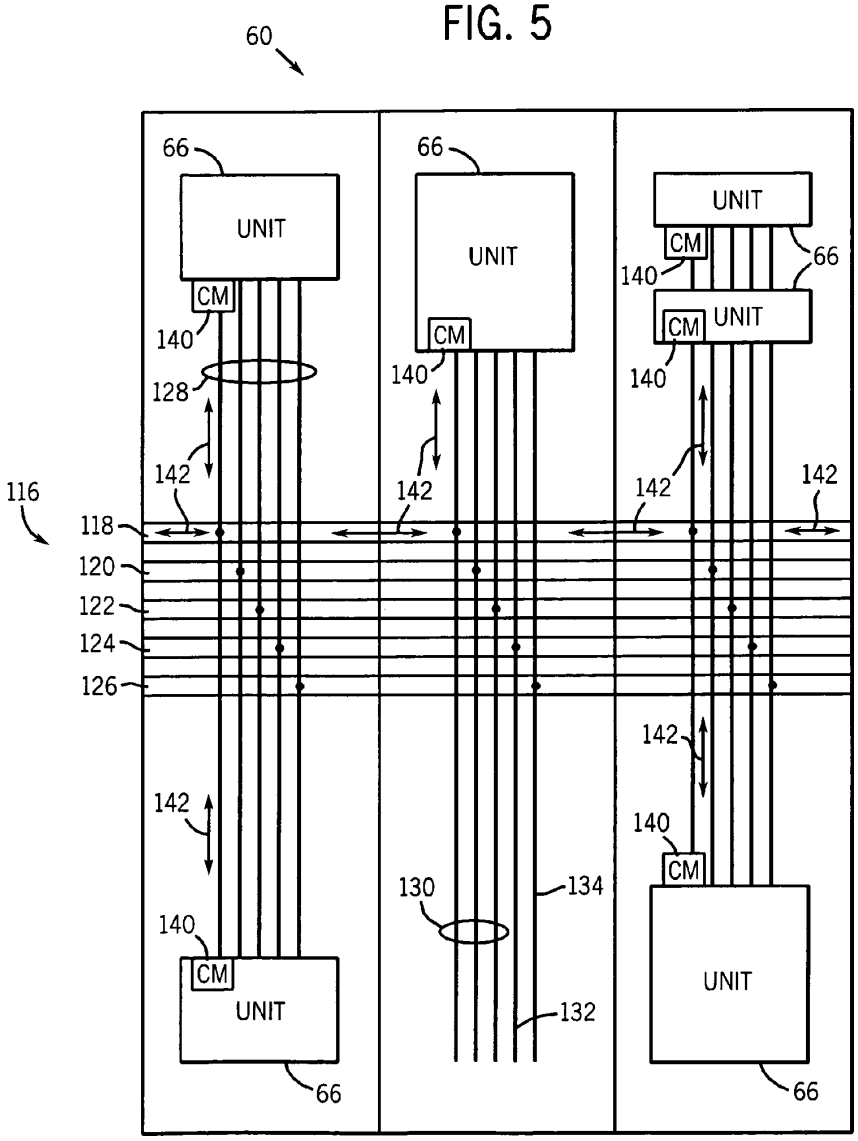

FIG. 6

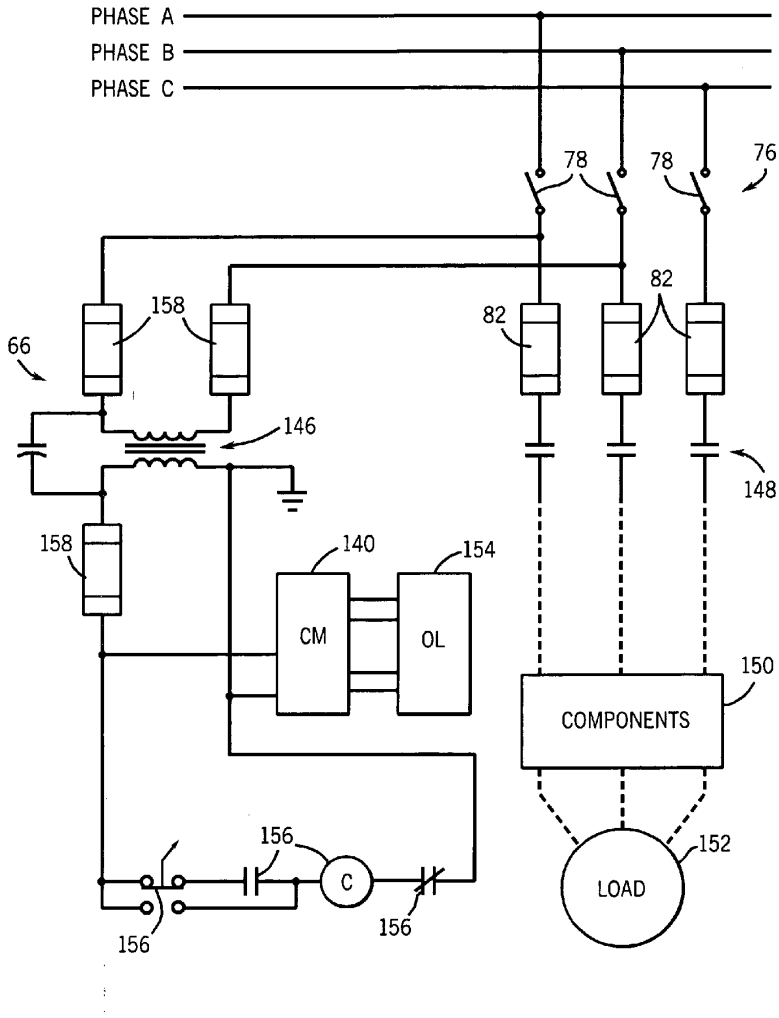
PHASE A
PHASE B
PHASE C
78
78
76
82
82
158
66
146
148
158
140
154
CM
OL
150
COMPONENTS
156
C
152
LOAD
156
156

FIG. 7

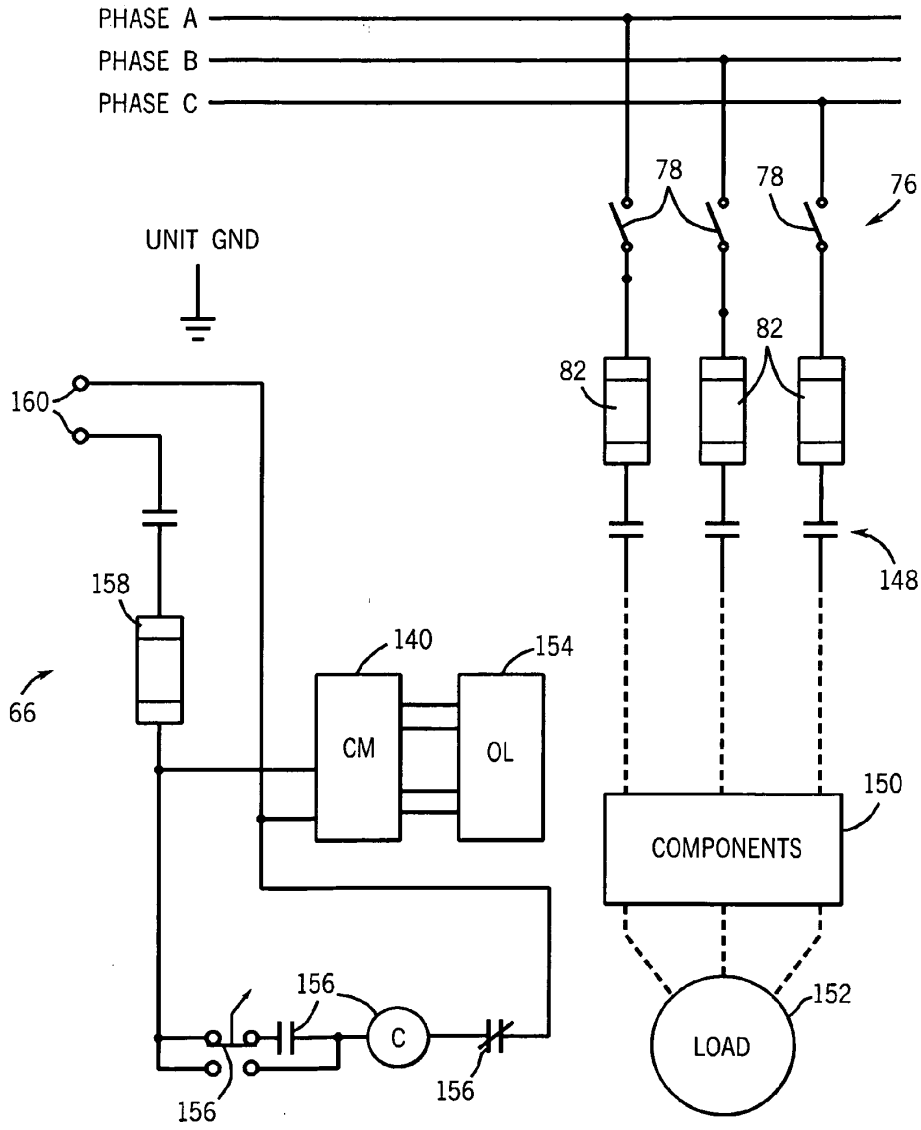
PHASE A
PHASE B
PHASE C
78
78
76
UNIT GND
82
82
160
148
158
140
154
66
CM
OL
150
COMPONENTS
156
C
152
LOAD
156
156

MOTOR CONTROL CENTER WITH POWER AND DATA DISTRIBUTION BUS

BACKGROUND

[0001] The present technique generally relates to power and data distribution within a motor control center (MCC). More particularly, the present technique relates to distribution of both power and data signals over a common power and data distribution bus.

[0002] In a number of applications, networked systems require distribution of both power and data signals to and from any number of devices. For example, in industrial applications, a networked system may distribute power, typically three-phase power, as well as appropriate data signals to any number of locations and devices. In traditional systems, power and data signals are transmitted over discrete wiring pathways. That is, power is distributed over dedicated power wires and data is distributed over dedicated data wires, both of which are disposed in separate protective conduits or cable jackets tubing.

[0003] As will be appreciated, an MCC may house a number of components of the industrial system, generally providing a centralized location for controlling and providing power to loads in a regulated manner. Such components generally include switching and protection devices. In a typical MCC, the components are networked to each other via numerous wires, resulting in crowded wire passages within the MCC, and increased installation and maintenance costs. Other MCCs have been developed that include smart components that are configured to communicate over a network cable instead of numerous discrete wires, but such MCCs still generally require the network cables to be routed through the same wire passages. Further, these network cables are often used to daisy-chain units to one another, preventing removal of a unit without first disconnecting the network cables, and further adding to installation and maintenance costs of the system.

[0004] In still another type of MCC, an integral network bus may be provided to permit communication to the devices and the system. In this arrangement, a device or unit could be plugged into the integral MCC network bus with a short cable, thus avoiding the labor associated with installing and uninstalling hand wired daisy-chain cables. However, this design generally requires installation of a discrete communication network within the MCC, and the application of low voltage dc power to operate the communication network. Still further, such a network may impose certain hurdles on component design and selection to meet constraints of such a topology, including consideration of trunk length, drop budget, terminations, and data rate selections, to name but a few, which also impact manufacturing and servicing costs.

[0005] There is a need, therefore, for an improved MCC system that provides efficient communication between devices in the MCC and reduces manufacturing and maintenance costs for the system.

BRIEF DESCRIPTION

[0006] The present invention generally provides techniques for configuring an MCC and associated components to respond to the needs briefly outlined above. Particularly, the MCC utilizes a combined power and data distribution bus system comprising a plurality of conductive bus bars. The MCC and components are configured to concurrently transmit both power and data over the same conductive bus bars, thus avoiding the need for separate power distribution and data transmission systems. In one embodiment, the combined bus system concurrently transmits data signals and one phase of three-phase power over the same conductive path. In another embodiment, data signals are provided with auxiliary control power delivered by common auxiliary bus bars.

DRAWINGS

[0007] These and other features, aspects, and advantages of the present invention will become better understood when the following detailed description is read with reference to the accompanying drawings in which like characters represent like parts throughout the drawings, wherein:

[0008] FIG. **1** is a diagram of an exemplary power and data distribution system having a number of components in accordance with one embodiment of the present invention;

[0009] FIG. **2** is a front elevational view of an exemplary MCC for housing various devices of a control system in accordance with one embodiment of the present invention;

[0010] FIG. **3** is an additional front view of the MCC of FIG. **2** with the various devices removed to illustrate a power and data distribution bus of the MCC in accordance with one embodiment of the present invention;

[0011] FIG. **4** is a front elevational view of the power and data distribution bus of FIG. **3** in accordance with one embodiment of the present invention;

[0012] FIG. **5** is a diagram of the MCC and various devices illustrated in FIGS. **2-4**, and generally depicts the distribution and routing of power and data through the power and data distribution bus to the devices within the MCC in accordance with one embodiment of the present invention;

[0013] FIG. **6** is a diagram of various components of an exemplary motor controller adapted to communicate over the power and data distribution bus in accordance with one embodiment of the present invention; and

[0014] FIG. **7** is a diagram of various components of an additional motor controller also adapted to communicate over the power and data distribution bus in accordance with one embodiment of the present invention.

DETAILED DESCRIPTION

[0015] In industrial applications, efficient distribution of power and data signals is often a motivating concern. Referring to FIG. **1**, an exemplary section of a power and data distribution system **10** is presented. Although, for the purposes of explanation, the present embodiment relates to an industrial application, the present technique can be applied to any number of settings in which the efficient distribution of power and data is a concern. Returning to the present embodiment, the power and data distribution system **10** comprises a three-phase power source **12**, such as a generator or power grid. The three-phase power may be ac power, such as 480V power, that powers a load **14**. For example, the load **14** may be a motor that operates on three-phase 480Vac power. For the present purposes, any voltage or current rating of ac power may be accommodated. Moreover, the power source **12** may be configured to provide other levels and kinds of power, such as 24Vdc, along with the primary three-phase power.

[0016] To achieve efficient operation, it may be advantageous for the load **14** to operate in response to, and in cooperation with, other system conditions. That is, the load **14** may be more efficient if operated in light of, for example, the status

or condition of other motors, sensors, controllers, or any other components disposed throughout the system **10**. Accordingly, the system **10** facilitates the transmission of data signals to and from these various components. While these various components may be distributed remotely from one another in certain embodiments, in an exemplary embodiment discussed in greater detail below a number of these components are disposed within an MCC.

[0017] In the exemplary system **10**, three-phase power and the data signals may be transmitted and communicated over a plurality of conductors **16**. More particularly, three-phase power may be respectively conducted on power conductors **18**. As further discussed below, data signals may be transmitted throughout the system **10** over a neutral conductor **20** and one of the power conductors **18**. To conduct power and data signals concurrently over a power conductor, the data signals may be transmitted in accordance with a data communications protocol. As discussed below, in the context of a localized control center such as an MCC, power and data may be distributed throughout the MCC over internal bus bars. Additionally, for protection of the system **10**, as well as to comply with commonly accepted design standards, the system **10** may comprise an earth ground conductor **22** that provides a path to earth ground.

[0018] To protect the system **10** against power surges, protection circuitry **24** may be disposed electrically downstream of the power source **12** and upstream of all or a large portion of the remainder of the network. However, it should be noted that the protection circuitry **24** may also be placed electrically proximate to the load or component it protects. Moreover, the protection circuitry **24** may even be integrated into the network component itself. Simply put, the protection circuitry **24** may be distributed and decentralized with respect to the networked system. The protection circuitry **24** may comprise, for example, circuit breakers, as well as switches and fuses, each designed to prevent inappropriate power levels from reaching the remainder of the power and data distribution system **10** as well as the particular network component. Moreover, the protection circuitry **24** may be configured to facilitate remote triggering and resetting thereof.

[0019] Coupled to the conductors **16** and located electrically between the load **14** and source **12** may be a controlling device **26**, such as a relay, motor controller or motor starter. The controlling device **26**, in response to an appropriate data signal, may interrupt three-phase power to the load **14**. As discussed above, a decision to interrupt power to the load **14** may be based on monitored conditions of the system **10**. Thus, the system **10** will typically include a number of sensors and circuits disposed throughout the system.

[0020] Advantageously, data collected by these circuits or sensors may be transmitted to a central location, such as remote control and monitoring circuitry **28**, which may be disposed within an MCC. Remote control and monitoring circuitry **28** may function as a receiving and processing center for any number of data signals. Additionally, the monitoring circuitry **28** may generate appropriate response signals for various components in the system **10**. In other words, the remote control and monitoring circuitry **28** may act as a brain for the system **10**. It should be understood, however, that circuitry **28** may include one or more individual controllers, computers, and so forth, in a single or remote locations. Moreover, it should be understood that the control circuitry **28** may be distributed throughout the system. That is, the control circuitry **28** may be electrically positioned proximate to the various network components. Indeed, the control circuitry **28** may even be integrated into the network components themselves. In such embodiments, the network would not necessarily contain a "central control", but rather an entire collection of remote control and monitoring circuits **28** working in tandem with one another.

[0021] In operation, the remote control and monitoring circuitry **28** may receive data signals from throughout the power and data distribution system **10**. It is worth repeating, however, that the monitoring and control circuitry **28** may be distributed and decentralized throughout the network. As further discussed below, these data signals may be transmitted over various conductors, such as over one of the power conductors **18** and a neutral conductor **20** working in cooperation with one another (e.g., via a differential signal protocol) in one embodiment. Accordingly, the exemplary remote control circuitry **28** is coupled to the neutral conductor **20**, as well as to the appropriate power conductor **18**.

[0022] Coupled to the remote control and monitoring circuitry **28** may be a remote site **30**. The remote site **30** may provide a location for a network administrator or operator to view the signals received by the control and monitoring circuitry **28**, determine the status of system **10**, perform control functions, and so forth. Moreover, the remote site **30** may provide a mechanism through which the operator may remotely and manually control various individual or sets of components or operations of the networked system **10**.

[0023] The remote control and monitoring circuitry **28** may, for example, receive data signals from sensors or actuators **32** disposed throughout the system **10**. To operate, the sensors and actuators **32**, and the various controlling devices **26** may require a level of power different than the exemplary 480Vac power. For example, the sensors and actuators **32** may require a level of power such as 120V single-phase ac or 24Vdc. Accordingly, power supply circuitry **34** may be disposed electrically between the power source **12** and the sensors and actuators **32**. Advantageously, the exemplary power supply circuitry **34** is coupled to a power conductor **18**, the neutral conductor **20** and the earth ground conductor **22**. Thus, the power supply circuitry may receive a single phase of the three-phase power and appropriately convert this power to an operable power level. By way of example, the power supply circuitry **34** may rectify and transform the 120V single-phase ac power to a 24Vdc power. Additionally, the power supply circuitry **34** may be coupled to the ground conductor **22** so as to provide the power supply circuitry with a path to earth ground.

[0024] With appropriate power, the sensors and actuators **32** may receive and transmit data signals throughout the system **10**. By way of example, the sensor may comprise a sensor indicative of the status or position of a machine component or workpiece. That is, the sensor **32** may be configured to indicate whether the component or workpiece is in an appropriate position to permit a programmer or manually controlled operation to proceed. Additionally, again by way of example, actuators may comprise any suitable devices, such as switches, relays, motors, control valves, pumps, hydraulic or pneumatic cylinders, and so forth.

[0025] The data obtained by the sensors **32** indicative of the condition of the actuators **32** may not be in a form that is interpretable by the remote control and monitoring circuitry **28**. Accordingly, network interface circuitry **36** translates these signals into data signals that are more appropriate. That is, the network interface may translate the raw data into data

signals in accordance with the predetermined data communications protocol. Such protocols may include common industrial protocols known in the art, such as the DeviceNet protocol, the ControlNet protocol, the ProfiBus protocol, EtherNet/IP, or the like. Additionally, the network interface circuitry **36** may translate return data signals from the remote control and monitoring circuitry **28** to the sensors or actuators **32**. Again, to transmit the data signals, the network interface is electrically coupled to the appropriate power conductor, such as the power conductor **18** also carrying data signals, as well as the neutral conductor **20**. In operation, the interface circuitry **36** translates the received data signals and sends response signals which, in turn, may instruct an actuator in its function.

[0026] Once these signals from the sensors and actuators **32** are received by the remote control and monitoring circuitry **28**, they may be interpreted so as to determine the appropriate response signals for the controlling device **26**, thereby controlling the load **14**. The remote control and monitoring circuitry **28** may conduct, over the conductors **16**, the appropriate data signals throughout the system **10**. Coupled to the conductors **16**, may be a power and data transfer assembly **40** which taps off of the conductors **16** and conducts the appropriate power and data signals to the controlling device **26** and, in turn, to the load **14**. In the illustrated embodiment, a set of branch power conductors **42** conduct three-phase power through the power and data transfer assembly **40** and into controlling device **26**. Coupled to these branch conductors may be a disconnect **44** configured to interrupt at least one phase of the three-phase power prior to the power reaching the controlling device **26**, as described below. Advantageously, the disconnect facilitates power interruption to the load **14** upstream of the device **26**, thereby allowing, if desired, one phase of power to reach the controlling device **26** or load **14**. Additionally, the power and data transfer assembly **40** conducts network data signals to the controlling device **26**, thereby controlling the load **14**. That is, the transfer assembly **40** may receive data signals and, in turn, produce a signal which trips the controlling device **26**, thereby interrupting power to the load **14**.

[0027] Also, within the power and data transfer assembly **40** may be various types of auxiliary circuitry **46**. The auxiliary circuitry may be configured to transmit signals indicative of the condition of the controlling device **26**. For example, the auxiliary circuitry may produce a response signal if a relay is tripped, thereby confirming loss of power to the load **14**. However, the auxiliary circuitry **46** may provide any number of functions to the power and data transfer assembly **40** as well as to the system **10**. Indeed, the auxiliary circuitry **46** may be employed to present a secondary signal indicative of the status of any number of system conditions.

[0028] The auxiliary circuitry **46** may operate from power other than that provided by the main (e.g., 480V) ac three-phase power. Accordingly, power supply circuitry **34** may be employed to alter the power signal from the power conductors to a level more appropriate for the auxiliary circuitry **46**. As discussed above, power supply circuitry **34** may be coupled to one of the power conductors, the neutral conductor **20**, and an earth ground **22**. The power supply circuitry **34** receives one phase of the three-phase power and converts this power to a power level more appropriate to the auxiliary circuitry **46**. Again, by way of example, the power supply circuitry **34** may rectify and convert single-phase 120Vac power to 24Vdc power. Once appropriately conditioned or converted, the power supply circuitry provides sufficient power to the auxiliary circuitry **46** for operation. Additionally, the auxiliary circuitry **46** may then transmit this conditioned power, if appropriate, to the controlling device **26** for operation. However, if the controlling device **26** requires a power level different than that of the auxiliary circuitry **46**, then the power supply circuitry **34** may be directly coupled to the controlling device **26** to provide an appropriate power level.

[0029] Similar to the sensors and actuators **32**, the auxiliary circuitry **46** may not provide data signals interpretable by the remote control and monitoring circuitry **28** and vice-versa. Accordingly, network interface circuitry **36** may also be provided within the power and data transfer assembly **40**. As discussed above, the network interface circuitry receives data signals from the auxiliary circuitry **46** and translates the signals into data signals comprehendible by the remote control and monitoring circuitry **28**, that is, data signals in accordance with the data communications protocol in use. To conduct these appropriately translated data signals to the remote control and monitoring circuitry, the network interface circuitry **36** is coupled to the appropriate power conductor (i.e., the power conductor conducting both data and power) and a neutral conductor **20**. It is again worth nothing that the remote control and monitoring circuitry **28** may be distributed throughout the network and may also be electrically proximate to the respective network components. Additionally, the network interface may receive data signals from the remote control and monitoring circuitry and translate such signals into signals appropriate for the auxiliary circuitry **46**. In turn, the auxiliary circuitry may transmit the translated signals to the controlling device **26**, thereby actuating the controlling device **26** and interrupting power to the load **14**. It is worth noting, however, that the network interface, if so desired, may bypass the auxiliary circuitry **46** and couple directly to the controlling device **26**. Indeed, if so desired, the controlling device may bypass the assembly **40** and be directly coupled to the conductors **16**.

[0030] In many instances, it may be necessary to interrupt power to the load in response to an override condition occurring in the system **10**. Accordingly, the system **10** may include override control circuitry **48**. The override circuitry **48** receives data signals from the network and determines, in accordance with an override protocol, whether an override signal is to be transmitted. If so, then the override circuitry produces this signal in accordance with both the override protocol as well as the data communications protocol, thereby interrupting power to the load **14**. The override circuitry **48** may be centralized in a central control configuration, such as the MCC discussed in detail below, or distributed throughout the system. For example, override circuitry **48** may be integrated into the components of the network. Indeed, the override circuitry **48** may be integrated into a given network component and configured to terminate power to the component in response to a detected override condition within the component. Simply put, the component may terminate power to itself. Moreover, the override circuitry **48** within a component may be capable of sending a signal that terminates operation and power to the entire system. Depending on the nature and origin of the interrupt command, any number of override protocols may be executed.

[0031] For the purposes of explanation, the networked system or power and data distribution system **10** may implement a simple press operation. In this explanatory example, the load **14** may be viewed as a motor configured to drive a press

plunger in a reciprocating manner. The exemplary press, more particularly the motor of the press, may be powered by three-phase 480Vac power. Coupled between the power source and the press motor may be a controlling device **26**, such as a motor controller or contactor. When open, the contactor would prevent three-phase power from reaching the motor, thereby disabling the press. However, the contactor may operate based upon logic to determine when, and for what duration, power to the motor should or should not be applied.

[0032] Accordingly, the various sensors **32** throughout the system may provide data, once translated by network interface circuitry **36**, to the remote control and monitoring circuitry **28** which, in turn, analyzes this data and produces a return data signal indicative of what the desired contactor status should be. This signal may then be transmitted over the appropriate power conductor **18** (i.e., the conductor that conducts both the data signals and one phase of the ac power) and the neutral **20** to the power and data transfer assembly **40**. Such communication may be provided in accordance with a safety protocol, such as a lockout/tagout protocol to avoid unexpected energization of various components and machinery during servicing of such components and machinery. Once received by the assembly **40**, the network interface circuitry **36** disposed therein may then translate this signal to one which is more appropriately understood by either the auxiliary circuitry **46** or the controlling device **26**. This signal would then instruct the controlling device (i.e., the contactor) to either maintain power to the motor or to interrupt power in response to a system condition.

[0033] Additionally, and continuing the instant example, the override circuitry **48** may produce response signals so as to prevent the motor (i.e., load **14**) from operating because of a certain condition of the system **10**. By way of example, a sensor **32** may be coupled to a press door or guard and configured to indicate whether this guard is either in an opened or closed position. The sensor **32** would then be scanned periodically, or, alternatively, when the door is open, the sensor would then transmit an indicative signal to the network interface which would in turn translate the signal to one appropriate for the remote control and monitoring circuitry **28**. If the signal is related to an override event, the signal is transmitted to override control circuitry **48** or to both that circuitry and the remote control monitoring circuitry **28**. The override circuitry interprets the signals and determines, in accordance with an override or safety protocol, that the press guard is open and, as such, the motor should not be operable. The override circuitry would then create a data signal, in accordance with a predetermined override protocol, and transmit this newly created data signal, over the appropriate conductors, to the power and data transfer assembly **40**. Once received, the power and data transfer assembly, by way of the network interface circuitry **36**, appropriately instructs the controlling device to discontinue control power to the contactor and, as such, prevent operation of the motor until the sensor indicates that the door is closed. Advantageously, the override circuitry **48** may thus function in parallel with the control circuitry, and may transmit coordinated signals in its own protocol over the same conductors.

[0034] As discussed above, various components of the system **10**, in addition to other components, may be disposed within an MCC. An exemplary MCC containing such components is illustrated in FIG. **2**. In a typical factory setting, one or more such MCC installations may be made to control a large number of material handling, manufacturing, packaging, processing, and other equipment, such as the reciprocating press plunger noted above. In the illustrated embodiment, the MCC comprises three sections **62**. However, a greater or lesser number of sections **62** may be used. The MCC **60** receives three-phase ac line power and couples it to each section **62**. In the illustrated embodiment, each section **62** has an enclosure **64** that is adapted to couple power to a plurality of units or "buckets" **66**. In the illustrated embodiments, the units **66** are adapted to "plug-in" to the MCC **60**. However, other methods of coupling the units **66** to the MCC, and other devices, may be used. The units **66**, in turn, are adapted to be disposed into the enclosures **64** to receive power. The units **66** may also receive non-hazardous power from a low-voltage (e.g., 24 Vdc) power source. In addition, the units **66** may receive and transmit data via a pre-established data protocol, such as a common industrial protocol. As discussed in greater detail below, the MCC **60** is configured to facilitate communications between the units **66** while reducing or avoiding the need for discrete communication wiring or cabling between the units **66**. However, in this embodiment, each section **62** has a wireway **68** for routing any such supplemental communication wiring that may be desired.

[0035] In the illustrated embodiment, the various units **66** comprise several motor controllers **70**, which may be similar to controlling device **26** (FIG. **1**), which are plugged into the MCC **60** to receive power. The motor controllers **70** are adapted to selectively control power to one or more electric motors. In this embodiment, the motor controllers **70** receive three-phase ac power from the MCC over a plurality of internal bus bars, as discussed at length below, and output power to a load, such as load **14**. Alternatively, a motor controller **70** may provide ac power to a variable frequency drive **72** to enable the variable frequency drive **72** to produce a variable frequency ac to power one or more electric motors. The variable frequency ac power may be coupled from each variable frequency drive **72** to a motor via a motor controller **70**. In the illustrated embodiment, a programmable logic controller (PLC) **74** is provided to enable one or more devices to be controlled automatically either from the PLC or via the communications network.

[0036] The units **66** may include a disconnect **76** that is provided to electrically isolate the respective unit **66** from the MCC. In one embodiment, with particular reference to the motor controller **70** having its interior exposed in FIG. **2**, the disconnect **76** of the motor controller is adapted with three switches **78** (FIGS. **6** and **7**), one for each phase of the three-phase alternating current. Each disconnect **76** may have a handle **80** disposed on the exterior of the unit **66** that is operable to open and close the switches **78**. In addition, the disconnect **76** may be adapted to house a short-circuit protection device. In the illustrated embodiment, the short-circuit protection device may comprise three fuses **82**, one for each phase of the three-phase alternating current, as illustrated in greater detail in FIGS. **6** and **7**. However, other short-circuit protection devices, such as circuit breakers, may be used instead or in addition to the fuses and switches. In the illustrated embodiment, the three-phase power is coupled to additional electrical components **84** within the unit **66**.

[0037] Each of the exemplary units **66** has a door **86** to enable the interior of each unit **66** to be accessed. In addition, some units **66** have a control station **88**. In the illustrated embodiment, the control station **88** has various indicator lights **90**, which may provide an indication of the operating

status of a unit **66**, the existence of an overload condition or some other fault condition, or the like. A control switch **92** is provided to control operation of the unit **66**. The units **66** may also include other diagnostic systems **98** that enable an operator to assess the status or operating conditions of the units **66** without having to open the door **86**. As illustrated in the present embodiment, such systems **98** may include an indicator or display **96** that is visible from the exterior of the unit **66** with the door **86** closed. In one embodiment, the display may signal whether voltage is present the various conductors of the MCC.

[0038] Additional features of an individual exemplary enclosure **64** are illustrated in FIG. **3**. For the sake of clarity, the presently illustrated enclosure **64** is provided without the various units **66** to facilitate explanation of certain features of the enclosure. In general, the enclosure **64** generally defines a device mounting volume **102** for receiving various units **66**. As will be appreciated, the enclosure **64** may be made of any suitable material, such as heavy gage sheet metal, reinforced plastics, or the like. As discussed above, although the present techniques provide for communication within the enclosure without the need for discrete wiring between units **66** installed within the enclosure, the enclosure **64** may include a wireway **68** in which additional load wiring, cabling, and so forth may be installed to service the components within the device mounting volume **102**. Individual doors **86** are provided for covering individual compartments of the enclosure that may be subsequently defined by shelves (removed for the sake of clarity) or other structures that support the electrical components of units **66**. A latch rail **104** is provided adjacent to the device mounting volume to interface with latches on the individual doors.

[0039] A communication and power bus subassembly **106** is provided along a rear wall of the enclosure **64**. As described in greater detail below, the bus subassembly permits power and data to be distributed throughout the enclosure in a plug-in manner without the need for a discrete communication network. The bus subassembly **106** is generally formed as a backplane having slots **108** for receiving conventional stab-type electrical connections on rear surfaces of device or unit supports received within the enclosure. Such slot and stab arrangements are generally known in the art. In the illustrated embodiment, the slots **108** are divided in pairs to receive corresponding two-pronged stabs for each phase of electrical power. Rows of such slots are provided to allow device supports to be mounted at various levels within the enclosure. Electrical power and data signals are provided to the enclosure via one or more appropriate conduits, as indicated generally by reference numeral **110**.

[0040] FIG. **4** illustrates the bus subassembly **106** removed from the enclosure **64** of FIG. **3** to clarify additional features of the subassembly. As shown in the elevational view of FIG. **4**, the bus subassembly **106** generally includes a bus cover **112**, which may be a molded sheet of synthetic material disposed over a series of horizontal and vertical busses. The bus cover serves to prevent contact between installed units **66** and the underlying busses except through slots **108**.

[0041] More particularly, in the present embodiment, the bus subassembly **106** includes and supports a series of horizontal conductive busses **116** and vertical conductive busses **128**, which are generally adapted to carry power and data to units **66** installed within the enclosure **64**. In one embodiment, the horizontal busses receive three-phase power and a neutral connection from an external power supply, such as the grid or power supply **12** discussed above. In certain embodiments, including that illustrated, the horizontal busses **116** include horizontal conductive bus bars **118**, **120**, **122**, **124**, and **126**, while the vertical busses **128** include several vertical conductive bus bars **130**, in addition to vertical conductive bus bars **132** and **134**. In one exemplary embodiment, the horizontal bus bars **118**, **120**, and **122** collectively provide three-phase power to the MCC, and to the installed units **66** via respective vertical bus bars **130**, each of these horizontal and vertical bus bar pairs carrying a single phase of the three-phase power.

[0042] Additionally, in some embodiments, the horizontal bus bar **124** is coupled to the vertical bus bar **132** and serves as a neutral bus within the MCC. It should be noted, however, that the neutral bus bars **124** and **132** may be omitted in other embodiments in full accordance with the present techniques. Also, if desired, auxiliary line or control power may be distributed within the MCC through horizontal bus bar **126** and vertical bus bar **134**. However, if such additional power is not desired, the horizontal bus bar **126**, the vertical bus bar **134**, and its respective slots **108** may also be omitted in accordance with the present techniques. In the presently illustrated embodiment, each horizontal bus bar is connected to its respective vertical bus bar at connection ports **136**, and the horizontal and vertical bus bars are otherwise electrically isolated from one another.

[0043] As noted above, and as illustrated in the exemplary embodiment of FIG. **5**, the horizontal and conductive bus bars of busses **116** and **128** facilitate both power and data transmission to and/or from an installed unit **66** within the MCC **60**. Particularly, installed units **66** may be electrically coupled to some or all of the vertical bus bars to receive power and to communicate data over the internal bus bars. In one embodiment, an installed unit **66** receives three-phase power from the horizontal power bus bars **118**, **120**, and **122** via the vertical bus bars **130**.

[0044] In the illustrated embodiment, each unit **66** includes a communication module **140** coupled to the components of the unit **66** and adapted to receive and/or transmit communications or data signals over a power bus bar, such as one or more of the vertical bus bars **130**. In short, the communication modules **140** enable the units **66** to communicate with each other or with other system components through the bus bars of busses **116** and **128**. Advantageously, the communication or data signals may be provided in accordance with a data communications protocol that facilitates the transmission of power and data concurrently over a power conductor. For example, the data communications protocol may comprise a standard protocol adapted to provided data signals over power, such as a protocol known as HomePlug, or similar technologies. Further, as will be appreciated, a communication module **140** may be an internal component of the unit **66** or may be coupled to an exterior of the unit in full accordance with the present techniques.

[0045] In the illustrated embodiment, each of the communication modules **140** is also coupled to a single, respective vertical bus bar **130**. In such an arrangement, data signals may be communicated to and from the installed units **66** over a combined power and data path comprising the horizontal bus bar **118** and those vertical bus bars **130** that are coupled to the bus bar **118**, as generally indicated by arrows **142**. In other words, the same conductive bars that provide one phase of the three-phase power to the units **66** may be employed to concurrently transmit data signals within the MCC. As will be

appreciated, the concurrent transmission of data signals over the power bus bars provides significant advantages. For example, in one embodiment, the MCC does not contain a discrete communication network separate from the integrated power and data bus network composed of the various bus bars described herein, obviating the need for numerous network cables, connectors, terminators, and the like, and resulting in reduced cost and labor associated with the MCC **60**. Further, because the data signals are carried along with the power in the MCC **60**, there is no need to inject additional power, such as a low voltage DC, just for the purpose of transmitting data. Finally, the concurrent transmission of data over the power bus bars allows for a more efficient modular system which allows for simpler and more cost-effective connection of devices without the need for considering drop budget or terminator application.

[0046] Although shown coupled to particular bus bars **130**, it will be appreciated that the communication modules may be coupled to any of the power bus bars **130** to enable data communication over any phase of the three-phase power. Indeed, in another embodiment, one or more of the communication modules may be coupled to multiple vertical bus bars **130** to allow data signals to be transmitted over multiple phases of the three-phase power. As may be appreciated, such communication may allow for increased communication bandwidth or provide redundancy of data signals. In certain embodiments, the units **66** and communication modules **140** may also be coupled to neutral bus bars **124** and **132**. These neutral bus bars may cooperate with those bus bars carrying both power and data signals to facilitate data communication, such as in accordance with a differential signal protocol, for example. It may be appreciated, however, that data transmission may occur independent of the neutral bus bars in other embodiments. For instance, a single-ended data signal may be transmitted over one phase of the three-phase power in cooperation with a protective earth ground (such as conductor **22** of FIG. **1**), a differential signal may be conducted over two phases of the three-phase power, or the like.

[0047] In those embodiments that communicate over one or more phases of the three-phase power, the auxiliary power bus bars **126** and **134** may be omitted. However, in other embodiments, the bus bars **126** and **134** may be provided to supply auxiliary power to the units **66**, and may serve as an alternative or additional data path for communication within the MCC **60**. For instance, in one embodiment, data signals are transmitted within the MCC **60** over the auxiliary power bus bars **126** and **134**. It should be noted that such an arrangement may facilitate servicing of a unit **66** by separating communication and control power from main power to the unit. For example, the unit may be configured such that partial removal of the unit disconnects main power to the unit (via vertical bus bars **130**), while remaining connected to vertical bus bars **132** and **134**. In such a position, the unit **66** may retain control power and data communications over the bus bars **132** and **134**. Again, in certain embodiments, the neutral bus bars **124** and **132** may cooperate with power transmission bus bars, such as auxiliary power bus bars **126** and **134**, in accordance with a differential signal protocol. Also, data may be transmitted over the auxiliary bus bars **126** and **134** in addition to the three-phase power bus bars to allow for redundancy of both operational power and data communications.

[0048] In some embodiments, and as noted above, a safety protocol may be imposed on the communication over the internal bus bars of the MCC to control power delivery to an external load, such as load **152** (FIGS. **6** and **7**). The safety protocol may include a lockout/tagout protocol, as also described above. Finally, the communication modules **140** of some embodiments may be coupled to one or more of the three-phase source power bus, the auxiliary control power bus, or the output load power bus to sense the presence of voltage on these conductors and provide an indication of such a presence to an operator, service technician, or the like.

[0049] Two exemplary units **66** of the MCC **60** are illustrated in FIGS. **6** and **7**. In each of these exemplary embodiments, the units **66** comprise motor controllers, such as motor controller **70** described above. However, as also noted above, the units **66** may include any of a number of various components for providing a wide range of functionality. In each of these embodiments, the unit **66** includes a disconnect **76** having switches **78** and fuses **82** to control the flow of three-phase power to downstream components **150** and a load **152**, although a circuit breaker may instead be employed in other embodiments.

[0050] In the embodiment illustrated in FIG. **6**, the unit **66** may receive power from the power bus and transform this power to a lower operating power, such as 24 Vac or 120 Vac single-phase power, via a step-down transformer **146**. In an alternative embodiment, such as that of FIG. **7**, the unit **66** may receive power from inputs **160**, such as from a separate terminal block. The unit includes the communication module **140** adapted to communicate over the power transmission bus bars, as described in detail above. Finally, to protect and/or control elements of the unit **66**, the components **150**, and the load **152**, the unit **66** may also include a variety of protection and overload circuitry known in the art, such as a motor starter **148**, an electronic overload module **154**, various additional components **156**, including a motor starter coil and PLC contacts, and fuses **158**.

[0051] While only certain features of the invention have been illustrated and described herein, many modifications and changes will occur to those skilled in the art. It is, therefore, to be understood that the appended claims are intended to cover all such modifications and changes as fall within the true spirit of the invention.

1. A motor control center (MCC) comprising:

an enclosure defining an interior volume;

a power and data distribution bus disposed within the enclosure, the power data and distribution bus comprising a plurality of conductive bus bars including first, second, and third conductive bus bars that are each configured to receive one respective phase of three-phase power from an external power source and distribute the respective phases within the MCC, the plurality of conductive bus bars configured to receive data signals and to transmit the data signals within the MCC; and

a device disposed within the interior volume, wherein the device is configured to receive at least one phase of three-phase power distributed by the first, second, and third conductive bus bars, and is configured to receive data signals from at least one conductive bus bar of the plurality of conductive bus bars.

2. The MCC of claim **1**, comprising a fourth conductive bus bar of the plurality of conductive bus bars, wherein the fourth conductive bus bar is a neutral bus bar and the device is configured to receive the data signals from at least one of the first, second, or third conductive bus bars in cooperation with the fourth conductive bus bar.

3. The MCC of claim **2**, wherein the device is configured to receive redundant data signals from more than one of the first, second, or third conductive bus bars in cooperation with the fourth conductive bus bar.

4. The MCC of claim **2**, comprising a fifth conductive bus bar of the plurality of conductive bus bars, wherein the fifth conductive bus bar is an auxiliary power bus bar configured to distribute auxiliary power within the MCC and to the device.

5. The MCC of claim **4**, wherein the device is configured to receive the data signals from the fifth conductive bus bar in cooperation with the fourth conductive bus bar.

6. The MCC of claim **5**, wherein the device is configured to receive redundant data signals from the at least one of the first, second, or third conductive bus bars and the fifth conductive bus bar in cooperation with the fourth conductive bus bar.

7. The MCC of claim **1**, wherein the device is configured to receive data signals in accordance with a common industrial protocol.

8. The MCC of claim **7**, wherein the device is configured to receive data signals in accordance with a safety protocol in addition to the common industrial protocol.

9. The MCC of claim **8**, wherein the device is configured to control output power delivery to a load in conformance with the safety protocol.

10. The MCC of claim **8**, wherein the safety protocol includes a lockout/tagout protocol.

11. The MCC of claim **1**, wherein the device is configured to detect voltage present on one or more of the conductive bus bars and/or a load power bus, and to indicate whether such voltage is present.

12. The MCC of claim **1**, wherein the MCC does not include a discrete communication network configured to operately independently from power distribution to components within the MCC.

13. The MCC of claim **1**, wherein the device is configured to receive single-ended data signals from one of the first, second, or third conductive bus bars.

14. The MCC of claim **13**, wherein the device is configured to receive the single-ended data signals from only one of the first, second, or third conductive bus bars.

15. The MCC of claim **1**, comprising an auxiliary control power conductive bar, wherein the device is configured to receive data signals from the auxiliary control power conductive bus bar.

16. A device configured for installation in a motor control center (MCC), the device comprising:

a plurality of electronic components configured to receive at least one phase of three-phase power from a common source power bus comprising a plurality of conductive power bus bars; and

a communication module coupled to the plurality of electronic components, wherein the communication module is configured to receive data signals from a first conductive power bus bar of the plurality of conductive power bus bars.

17. The device of claim **16**, wherein the communication module is configured to receive data signals from the first conductive power bus bar in cooperation with a neutral bus bar.

18. The device of claim **16**, wherein the communication module is configured to receive the data signals and one phase of the three-phase power from the first conductive power bus bar.

19. The device of claim **16**, wherein the communication module is configured to receive the data signals and derive an auxiliary power signal from the first conductive power bus bar, the auxiliary power signal being independent of the three-phase power.

20. The device of claim **16**, wherein the communication module is configured to receive redundant data signals over the first conductive power bus bar and a second conductive power bus bar.

21. The device of claim **16**, wherein the device comprises a motor controller.

22. The device of claim **21**, wherein the communication module is configured to receive data signals in accordance with a safety protocol and to control power to a motor in conformance with the safety protocol.

23. The device of claim **22**, wherein the plurality of components include override circuitry configured to enable the communication module to control the power to the motor.

24. A method for distributing power and data to a device within a motor control center (MCC) having a plurality of power bus bars, the method comprising:

applying three-phase power to a common source power bus of the MCC, the common source power bus comprising first, second, and third power bus bars of the plurality of power bus bars such that each of the first, second, and third power bus bars conducts one phase of the three-phase power;

coupling the device to and receiving power from at least one of the first, second, and third power bus bars; and

transmitting data signals to and/or receiving data signals from the device via at least one power bus bar of the plurality of power bus bars.

25. The method of claim **24**, wherein the at least one power bus bar comprises at least one of the first, second, or third power bus bars.

26. The method of claim **24**, wherein the at least one power bus bar comprises a fourth power bus bar that conducts auxiliary power to the device.

27. The method of claim **26**, comprising coupling the device to each of the first, second, and third power bus bars.

28. The method of claim **27**, comprising interrupting power to the device from the first, second, and third power bus bars while maintaining electrical communication between the fourth power bus bar and a neutral bus bar to facilitate concurrent servicing of and communication with the device.

29. The method of claim **26**, comprising transmitting redundant data signals over multiple power bus bars of the plurality of power bus bars.

30. The method of claim **26**, wherein transmitting data signals is performed in accordance with a safety protocol.

* * * * *