US 20110197988A1

(19) United States

(12) Patent Application Publication

(10) Pub. No.: US 2011/0197988 A1

(43) Pub. Date: Aug. 18, 2011

Van Vliet et al.

(54) **FUEL DELIVERY SYSTEM AND METHOD**

(75) Inventors: **J. Todd Van Vliet**, Edmonton (CA); **Scott M. Van Vliet**, Okotoks (CA); **Glen M. Brotzel**, Sherwood Park (CA)

(73) Assignee: **ENVIRONMENTAL REFUELING SYSTEMS INC.**, Edmonton (CA)

(21) Appl. No.: **13/028,991**

(22) Filed: **Feb. 16, 2011**

Related U.S. Application Data

(60) Provisional application No. 61/305,320, filed on Feb. 17, 2010.

(30) **Foreign Application Priority Data**

Feb. 16, 2010 (CA) 2693567

Publication Classification

(51) **Int. Cl.**
B65B 1/04 (2006.01)
B65D 51/00 (2006.01)

(52) **U.S. Cl.** **141/1**; 141/236; 220/212

(57) **ABSTRACT**

A fuel delivery system and method for reducing the likelihood that a fuel tank of equipment at a well site during fracturing of a well will run out of fuel. A fuel source has plural fuel outlets, a hose on each fuel outlet of the plural fuel outlets, each hose being connected to a fuel cap on a respective one of the fuel tanks for delivery of fuel to the fuel tank. At least a manually controlled valve at each fuel outlet controls fluid flow through the hose at the respective fuel outlet.

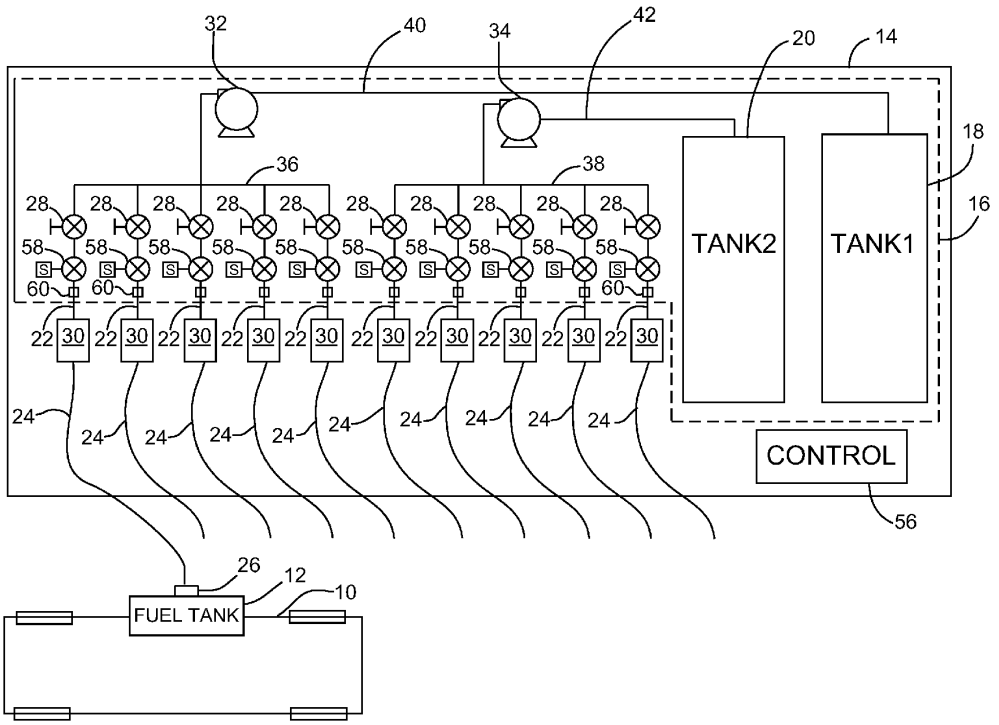

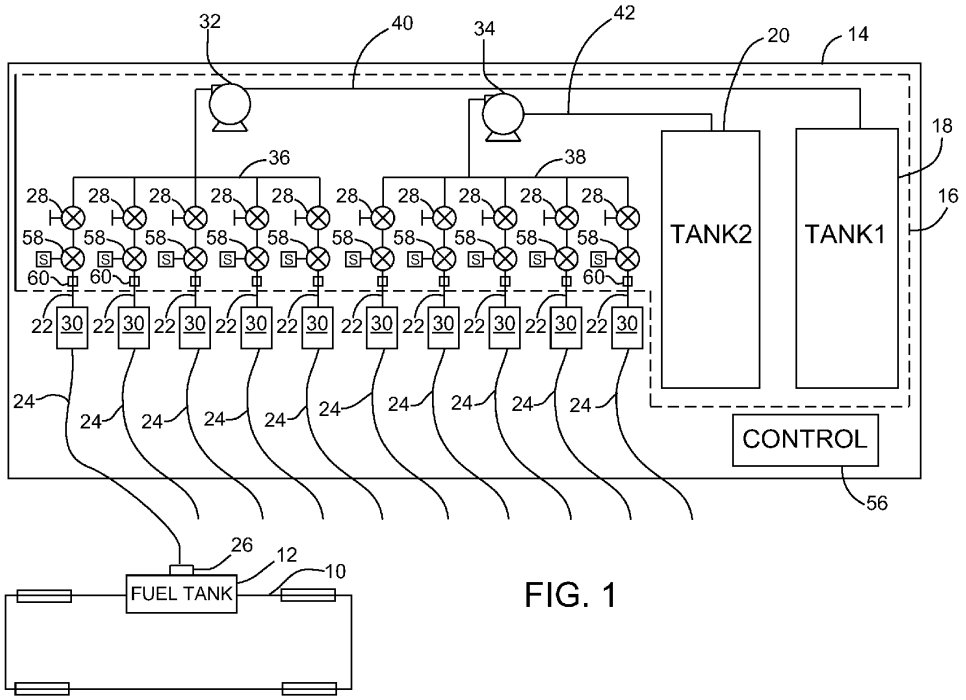
32
40
34
42
20
14
18
16
36
38
28
58
60
22
30
24
TANK2
TANK1
CONTROL
56
26
12
10
FUEL TANK

FIG. 1

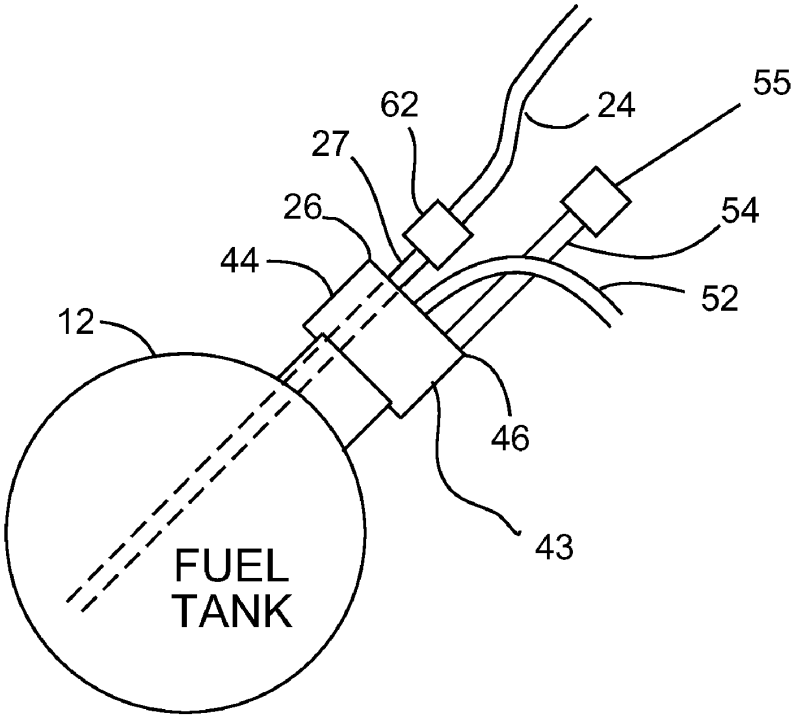

FIG. 2

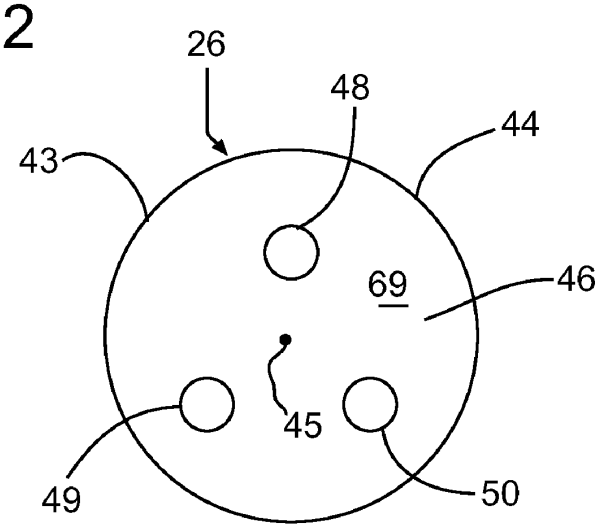

FIG. 3

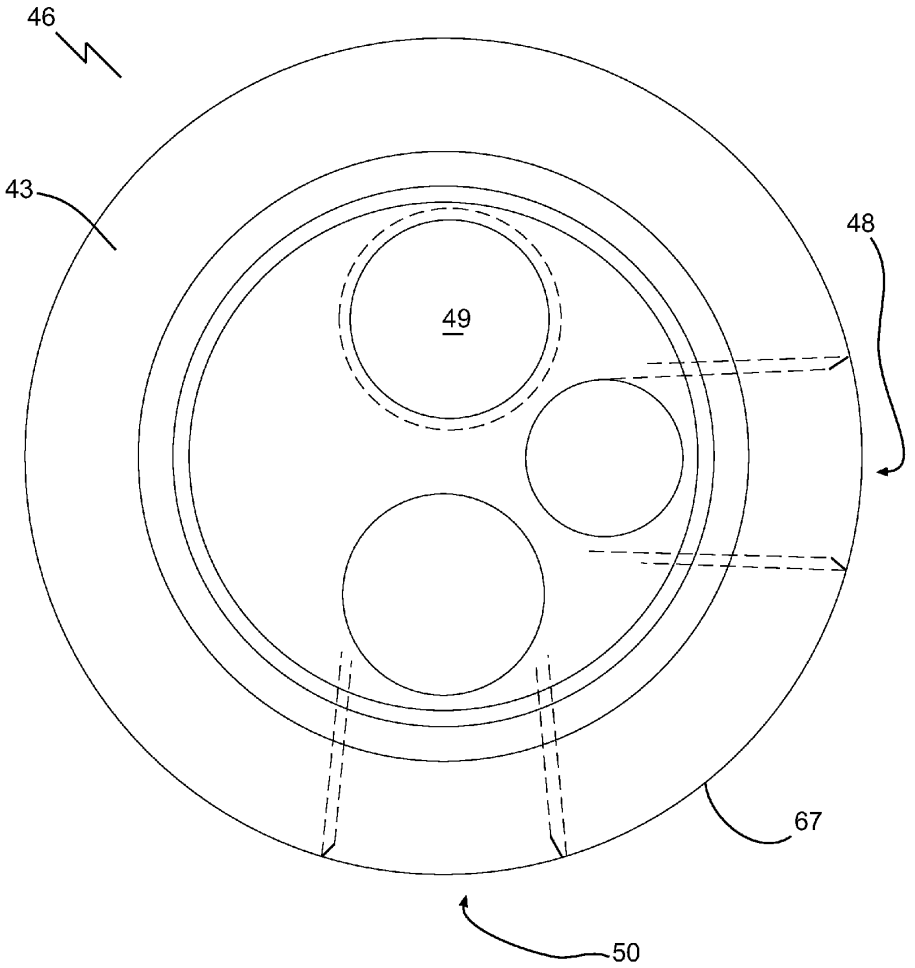

FIG. 4

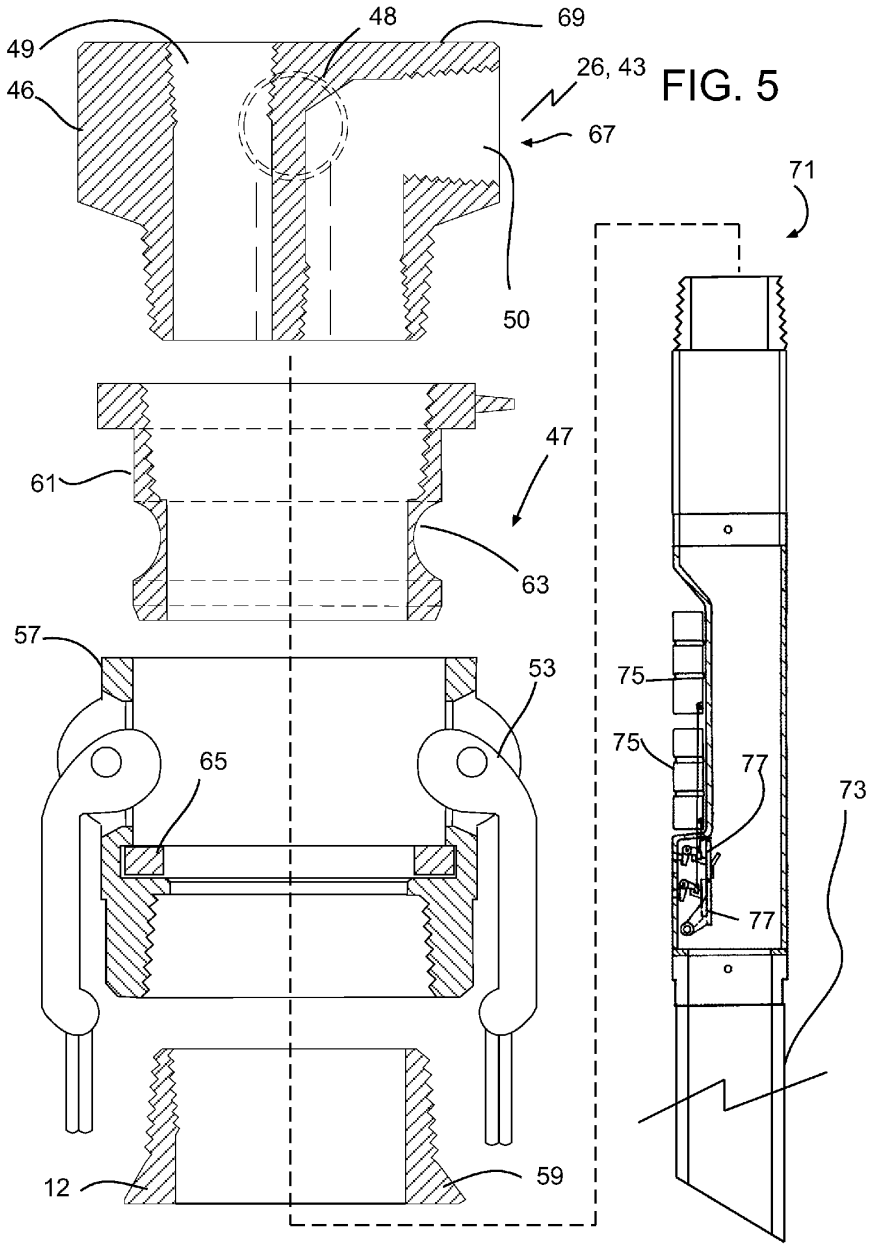

FIG. 5

FUEL DELIVERY SYSTEM AND METHOD

TECHNICAL FIELD

[0001] Fuel delivery systems and methods.

BACKGROUND

[0002] Equipment at a well being fractured requires large amounts of fuel. Conventionally, if the equipment needs to be at the well site during a very large fracturing job, the fuel tanks of the equipment may need to be filled up several times, and this is done by the well known method of manually discharging fluid from a fuel source into each fuel tank one after the other. If one of the fuel tanks runs out of fuel during the fracturing job, the fracturing job may need to be repeated, or possibly the well may be damaged. The larger the fracturing job, the more likely equipment is to run out of fuel. Dangers to the existing way of proceeding include: extreme operating temperatures and pressures, extreme noise levels, and fire hazard from fuel and fuel vapours.

SUMMARY

[0003] A fuel delivery system and method is presented for reducing the likelihood that a fuel tank of equipment at a well site during fracturing of a well will run out of fuel. There is therefore provided a fuel delivery system for delivery of fuel to fuel tanks of equipment at a well site during fracturing of a well, the fuel delivery system comprising a fuel source having plural fuel outlets, a hose on each fuel outlet of the plural fuel outlets, each hose being connected to a fuel cap on a respective one of the fuel tanks for delivery of fuel to the fuel tank; and a valve arrangement at each fuel outlet controlling fluid flow through the hose at the respective fuel outlet. The valve arrangement may be a single valve, for example manually controlled. The fuel source may comprise one or more manifolds with associated pumps and fuel line or lines. Hoses from the manifolds may be secured to the fuel tanks by a cap with ports, which may include a port for fuel delivery, a port for a fluid level sensor and a port for release of air from the fuel tank during fuel delivery. The fluid level sensor combined with an automatically operated valve as part of the valve arrangement on the fuel outlets from the fuel source may be used for automatic control of fuel delivery. A manual override is preferably also provided to control fuel flow from the fuel outlets.

[0004] A method is also provided for fuel delivery to fuel tanks of equipment at a well site by pumping fuel from a fuel source through hoses in parallel to each of the fuel tanks; and controlling fluid flow through each hose independently of flow in other hoses.

[0005] A cap or fill head for a fuel tank is disclosed, comprising: a housing having a throat and a top end; a first port in the top end provided with a connection for securing a hose to the cap; and a second port in the top end holding a fuel level sensor.

[0006] These and other aspects of the device and method are set out in the claims, which are incorporated here by reference.

BRIEF DESCRIPTION OF THE FIGURES

[0007] Embodiments will now be described with reference to the figures, in which like reference characters denote like elements, by way of example, and in which:

[0008] FIG. **1** is a schematic of a fuel delivery system;

[0009] FIG. **2** is a side view of a tank to which fuel is to be delivered;

[0010] FIG. **3** is a top view of a cap for delivering fuel to the tank of FIG. **2**;

[0011] FIG. **4** is a bottom plan view of a top end of a cap for delivering fuel to the tank of FIG. **2**; and

[0012] FIG. **5** is an exploded side elevation view, in section, of a fuel cap comprising the top end of FIG. **4** assembled with an intermediate portion, a bottom end, and an overfill protection valve. A fuel tank fill riser and overfill protection valve are also included in the image.

DETAILED DESCRIPTION

[0013] Immaterial modifications may be made to the embodiments described here without departing from what is covered by the claims. In the claims, the word "comprising" is used in its inclusive sense and does not exclude other elements being present. The indefinite article "a" before a claim feature does not exclude more than one of the feature being present. Each one of the individual features described here may be used in one or more embodiments and is not, by virtue only of being described here, to be construed as essential to all embodiments as defined by the claims.

[0014] Equipment at a well site use for a fracturing job may comprise several pumpers and blenders. A representative pumper **10** is shown in FIG. **1** with a fuel tank **12**. Typically, the fuel tank **12** comprises a connected pair of tanks. A fuel delivery system **14** is provided for delivery of fuel to multiple fuel tanks **12** of multiple pieces of equipment **10** at a well site during fracturing of a well. The fuel delivery system **14** may be contained on a single trailer, for example wheeled or skidded, or parts may be carried on several trailers or skids. For use at different well sites, the fuel delivery system should be portable and transportable to various well sites.

[0015] The fuel delivery system **14** includes a fuel source **16**. The fuel source **16** may be formed in part by one or more tanks **18**, **20** that are used to store fuel. The tanks **18**, **20** may be mounted on the same trailer as the rest of the fuel delivery system **14** or on other trailers. The tanks **18**, **20** should be provided with anti-siphon protection. The fuel source **16** has plural fuel outlets **22**. Respective hoses **24** are connected individually to each fuel outlet **22**. Each hose **24** is connected to a fuel cap or fill head **26** on a respective one of the fuel tanks **12** for delivery of fuel to the fuel tank **12** through the hose **24**. Hoses **24** may each have a sight glass (Visi-Flo™, not shown) to check flow and observe air-to-fuel transition. Sight glasses may be used on hoses **24** or elsewhere in the system. Pressure meters (not shown) may be provided for example on each of the hoses **24** from the manifold to determine head pressure as well as deadhead pressure from the pumps **32**, **34**. A valve arrangement, comprising for example valve **28** and/or valve **58**, is provided at each fuel outlet **22** to control fluid flow through the hose **24** connected to each respective fuel outlet **22** to permit independent operation of each hose **24**. The valve arrangement preferably comprises at least a manually controlled valve **28**, such as a ball valve, and may comprise only a single valve on each outlet **22** in some embodiments. The hoses **24** are preferably stored on reels **30**. The reels **30** may be manual reels, or may be spring loaded. In order to accommodate the weight of hoses **24** on reels **30**, the skid or trailer frame may have to be braced (not shown) sufficiently in order to prevent the hose **24** from forcing the frame open. Hose covers, such as aluminum covers (not shown), may be provided for capping hoses **24** that are not connected to fuel tanks

12, as a precaution in the event of a leak from a hose **24** or to prevent leakage in the event fuel is mistakenly sent through a hose **24** not connected to a respective fuel tank **12**.

[0016] In the embodiment shown in FIG. **1**, each tank **18**, **20** is connected to respective pumps **32**, **34** and then to respective manifolds **36**, **38** via lines **40**, **42**. The fuel outlets **22** are located on the manifolds **36**, **38** and fluid flow through the fuel outlets **22** is controlled preferably at least by the manual valves **28**. In a further embodiment, the fuel outlets **22** may each be supplied fuel through a corresponding pump, one pump for each outlet **22**, and there may be one or more tanks, even one or more tanks for each outlet **22**. However, using a manifold **36**, **38** makes for a simpler system. The manually controlled valves **28** are preferably located on and formed as part of the manifolds **36**, **38**.

[0017] The fuel caps **26** are shown in FIGS. **2** and **3** in more detail. Each fuel cap **26** is provided with a coupling for securing the fuel cap **26** on a tank **12**, and this coupler usually comprises a threaded coupling. The fuel cap **26** comprises a housing **43** with a throat **44**, threaded in the usual case for threading onto the fuel tank **12**, and top end **46**. Throat **44** may define a central housing axis **45** (FIG. **3**). A quick coupler, not shown, may be included between the top end and throat. The throat may be sized for different sizes of fuel tank inlets. In one embodiment, the fuel cap **26** comprises at least three ports **48**, **49** and **50** in the top end **46**. One of the ports **48** may be provided as a breather port with a line **52** extending from the cap **26** preferably downward to allow release of air and vapor while the tank **12** is being filled with fuel. A pail (not shown) may be provided at the end of line **52** in order to catch any overfill. A one-way valve may be added to the breather port, for example to reduce the chance of fuel being spilled through the breather port during filling of fuel tanks **12** on equipment such as pumpers that vibrate violently. However, in another embodiment such fuel tanks **12** on violently vibrating equipment may simply be restricted from filling past a level relatively lower from non-vibrating equipment in order to reduce spilling. The cap **26** preferably seals the inlet on the fuel tank **12** except for the vapor relief line **52**. Each cap **26** also preferably comprises a fuel level sensor **54** mounted in port **49**. The fuel level sensor **54** may be any suitable sensor such as a float sensor, vibrating level switch or pressure transducer. A suitable float sensor is an Accutech FL10™ Wireless Float Level Field Unit.

[0018] The sensor **54** preferably communicates with a control station **56** on the trailer **14** via a wireless communication channel, though a wired channel may also be used. For this purpose, the fuel level sensor **54** preferably includes a wireless transceiver **55**, such as an Accutech™ Multi-Input Field Unit or other suitable communication device. Transceiver **55** may be provided with a mounting bracket (not shown) or clip for attachment to fuel tank **12**. This may be advantageous in the event that fuel tank **12** does not have sufficient headspace to allow transceiver **55** to be positioned as shown in FIG. **2**. The control station **56** comprises a transceiver that is compatible with the transceiver at the sensor **54**, such as an Accutech™ base radio, and a variety of control and display equipment according to the specific embodiment used. In an embodiment with automatically operating valves **58**, the control station **56** may comprise a conventional computer, input device (keyboard) and display or displays. In a manual embodiment, the operator may be provided with a valve control console with individual toggles for remote operation of the valves **58**, and the valve control console, or another console, may include visual representations or displays showing the fuel level in each of the tanks **12**. Any visual representation or display may be used that shows at least a high level condition (tank full) and a low level condition (tank empty or nearly empty) and preferably also shows actual fuel level. The console or computer display may also show the fuel level in the tanks **18**, **20** or the rate of fuel consumption in the tanks **18**, **20**.

[0019] The port **50** may be used to house a conduit **27** such as a drop tube, pipe or flexible hose that extends down through the cap **26** to the bottom of the fuel tank **12**, and which is connected via a connection **62**, for example a dry connection, to one of the hoses **24**. The conduit **27** should extend nearly to the bottom of the fuel tank **12** to allow for bottom to top filling, which tends to reduce splashing or mist generation. The conduit **27** may be provided in a length sufficient to eliminate generation of static electricity. A telescoping stinger could be used for the conduit **27**. If the fuel tank **12** has an extra opening, for example as a vent, this vent may also be used for venting during filling instead of or in addition to the port **48**, with the vent line **52** installed in this opening directing vapor to the ground. Where only the extra opening on the fuel tank **12** is used, the cap **26** need only have two ports. In another embodiment requiring only two ports, venting may be provided on the cap **26** by slots on the side of the cap **26**, and with the other ports used for fuel delivery and level sensing. To provide the slots, the top end of a conventional cap with slots may have its top removed and replaced with the top end **46** of the cap **26**, with or without the additional vent **48**, depending on requirements. A pressure relief nozzle may be provided on hoses **24**, or at any suitable part of the system in order to reduce the chance of pressure release upon disconnect or connection. A drain cock (not shown) may also be used to ensure that all pipes/hoses can be drained before removal. Each manifold may have a low-level drain.

[0020] The fuel delivery system **14** may be provided with automatic fuel delivery by providing the valve arrangement on the outlets **22** with an electrically operable valve **58** on each fuel outlet **22** shown in FIG. **1** with a symbol indicating that the valve **58** is operable via a solenoid S, but various configurations of automatic valve may be used. The control station or controller **56** in this embodiment is responsive to signals supplied from each fuel level sensor **54** through respective communication channels, wired or wireless, but preferably wireless, to provide control signals to the respective automatically operable valves **58**. Each valve **58** includes a suitable receiver or transceiver for communicating with the control station **56**. The controller **56** is responsive to a low fuel level signal from each fuel tank **12** to start fuel flow to the fuel tank **12** independently of flow to other fuel tanks **12** and to a high level signal from each fuel tank **12** to stop fuel flow to the fuel tank **12** independently of flow to other fuel tanks **12**. That is, commencement of fuel delivery is initiated when fuel in a fuel tank is too low and stopped when the tank is full. A manual valve may also be provided for this purpose. Redundant systems may be required to show fuel level, as for example having more than one fuel sensor operating simultaneously. Having a manual override may be important to a customer. Manual override may be provided by using valves **28**, and may also be provided on an electrically operated valve **58**. The manual override should be provided on the low fuel side to allow manual commencement of fuel delivery and high fuel side to allow manual shut-off of fuel delivery.

[0021] Pump **32**, **34** operation may be made automatic by automatically turning the pump(s) off after pressure in the system has risen to a predetermined level. For example, this may be done by adding a pressure switch (not shown) to the system, for example to the pump, which pressure switch would stop the power to the pump when all the valves, such as valves **28**, **58**, are closed and the pump has built up pressure to a predetermined level. As soon as one of the valves is opened the pressure from the pump line would drop off and the pressure switch would allow power back to the pump unit, allowing the pump to start and push fuel through the lines. Once all valves are shut again the pump would build pressure up to the predetermined pressure and the pressure switch would sense the rise in pressure and shut the power to the pump down again. In another embodiment, controller **56** may be set up to turn off the pump if all valves are closed. The pressure switch may be used as a redundant device in such an embodiment.

[0022] In the preferred embodiment, each hose **24** is connected to a fuel outlet **22** by a dry connection **60** and to a cap **26** by a dry connection **62**. The hoses **24** may be 1 inch hoses and may have any suitable length depending on the well site set up. Having various lengths of hose **24** on board the trailer **14** may be advantageous. One or more spill containment pans (not shown) may be provided with the system, for example a pan of sufficient size to catch leaking fluids from the system during use. The pan or pans may be positioned to catch fluids leaking from each or both manifolds, and hose reels **30**. Each manifold may have a pan, or a single pan may be used for both manifolds.

[0023] In operation of a fuel delivery system to deliver fuel to selected fuel tanks of equipment at a well site during fracturing of a well, the method comprises pumping fuel from a fuel source such as the fuel source **14** through hoses **24** in parallel to each of the fuel tanks **12** and controlling fluid flow through each hose **24** independently of flow in other hoses **24**. Fluid flow in each hose **24** is controlled automatically or manually in response to receiving signals representative of fuel levels in the fuel tanks Fuel spills at each fuel tank **12** are prevented by providing fuel flow to each fuel tank **12** through the fuel caps **26** on the fuel tanks **12**. Emergency shut down may be provided through the manually operated valves **28**. The caps **26** may be carried with the trailer **14** to a well site and the caps on the fuel tanks at the well site are removed and replaced with the caps **44**. The trailer **14** and any additional fuel sources remain on the well site throughout the fracturing job in accordance with conventional procedures. The emergency shut down may be provided for example to shut all equipment including valves and pumps, and may activate the positive air shutoff on the generator.

[0024] The number of outlets **22** on a manifold **36**, **38** may vary and depends largely on space restrictions. Five outlets **22** per manifold **36**, **38** is convenient for a typical large fracturing job and not all the outlets **22** need be used. Using more than one manifold permits redundancy in case one manifold develops a leak. The hoses **24** are run out to equipment **10** through an opening in the trailer wall in whatever arrangement the well operator has requested that the fracturing equipment be placed around the well. For example, one manifold **36** may supply fluid to equipment **10** lined up on one side of a well, while another manifold **38** may supply fluid to equipment **10** lined up on the other side. The hoses **24** may be conventional fuel delivery hoses, while other connections within the trailer **14** may be hard lines. The trailer **14** may be of the type made by Sea-Can Containers of Edmonton, Canada. The fuel sources **18**, **20** may be loaded on a trailer separate from the trailer **14** and may constitute one or more body job tanker trucks or other suitable tanker or trailer mounted fuel tank for the storage of fuel. The fuel sources **18**, **20** may be stacked vertically on the trailer **14** or arranged side by side depending on space requirements. The fuel sources **18**, **20** etc should be provided with more than enough fuel for the intended fracturing job. For some fracturing jobs, two 4500 liter tanks might suffice, such as two Transtank Cube 4s (trademark) available from Transtank Equipment Solutions.

[0025] The control station **56** may be provided with a full readout or display for each fuel tank **12** being filled that shows the level of fuel in the fuel tank **12** including when the fuel tank **12** is near empty and near full. An alternative is to provide only fuel empty (low sensor dry) or fuel full (high sensor wet) signals. The fuel level sensor **54** may be provided with power from a generator or generators in series (not shown) on the trailer **14** (not preferred), via a battery installed with the sensor **54** or directly from a battery (not shown) on the equipment **12**. If a battery is used, it may need to be small due to space constraints on the cap **44**. Various types of fuel sensor may be used for the fuel sensor **54**. A float sensor is considered preferable over a transducer due to reliability issues. As shown schematically in FIG. **2**, the fuel inlet on the fuel tank **12** is oriented at an angle to the vertical, such as 25°. Fuel level sensor **54** may be a hydrostatic pressure mechanism that references ambient atmospheric pressure as the base, and thus can operate at any altitude. Hydrostatic pressure sensors may be more robust than transducer systems and may have a sensing portion inserted into the fuel tank on a cable (not shown) depending downward from the fuel cap **26**. If the failsafe is set to "close", all systems may need to be functioning in order for this system to give a reading. The operator can then tell immediately whether the system is functioning or not and take proactive steps to resolve any issue. No fuel may flow unless all systems are operating properly. Fuel requirements of a fuel tank **12** may be logged at the control station **56** to keep track of the rate at which the individual pieces of equipment **10** consume fuel. A, a filler or resin may be used in the electronic fittings (not shown) in the sensor **54** head for preventing liquid entry into the electronic components such as the wireless transceiver **55**.

[0026] The manual valves **28** should be readily accessible to an operator on the trailer **14**. This can be arranged with the manifolds **36**, **38** mounted on a wall of the trailer with the outlets **22** extending inward of the trailer wall. Pressure gauges (not shown) may be supplied on each of the outlets **22**, one on the manifold side and one downstream of the valve **28**. As fuel levels in the fuel tanks **12** drop, a pressure differential between the pressure gauges can be used to determine a low fuel condition in the fuel tanks **12** and the fuel tanks **12** may be individually filled by an operator. During re-fueling at a fracturing job, the manual valves **28** may remain open, and the operator may electrically signal the automatic valves **58** to open, using an appropriate console (not shown) linked to the valves **58**. The level sensor **54** at the fuel tank **12** may be used to indicate a high level condition. An automatic system may be used to close the valves **58** automatically in the case of a high fluid level detection or the operator may close the valves **58** using the console (not shown). In the case of solenoid valves being used for the valves **58**, either cutting or providing power to the valves **58** may be used to cause the closing of the valves **58**, depending on operator preference. A screen or

filter may be provided upstream of the solenoids, in order to prevent debris from entering and potentially damaging the solenoid.

[0027] Hoses from the outlets **22** may be stored on reels **30** mounted on two or more shelves within the trailer **14**. Filters (not shown) may be provided on the lines between the fuel sources **18**, **20** and the pumps **32**, **34**. An example of a suitable filter is a five-micron hydrosorb filter. Another example of a filter is a canister-style filter added immediately after the pump. A fuel meter (not shown) may also be placed on the lines between the fuel sources **18**, **20** and the pumps **32**, **34** so that the operator may determine the amount of fuel used on any particular job. The pumps **32**, **34** and electrical equipment on the trailer **14** are supplied with power from a conventional generator or generators (not shown), which may conveniently be mounted on the trailer. Size of the pumps **32**, **34** should be selected to ensure an adequate fill time for the fuel tanks **12**, such as 10 minutes, with the generator or generators (not shown) to supply appropriate power for the pumps and other electrically operated equipment on the trailer **14**. Pumps **32**, **34** may be removable in order to be changed out if required. For example, the pumps **32**, **34** may be connected by non-permanent wiring. Pumps **32**, **34** may be centrifugal pumps, such as Gorman-Rupp™ or Blackmer™ pumps. Lights and suitable windows in the trailer **14** are provided so that the operator has full view of the equipment mounted on the trailer and the equipment **10** being refueled. The spatial orientation of the control station **56**, reels **30**, manifolds **36**, **38**, tanks **18**, **20** and other equipment such as the generators is a matter of design choice for the manufacturer and will depend on space requirements.

[0028] Preferably, during re-fueling of the fracturing equipment, fracturing equipment should not be pressurized and the fuel sources should not be located close to the fracturing equipment. Additional mechanical shut-off mechanisms may also be included, such as a manual shut-off on the remote ends of the hoses, for example at the dry connection **62**. Hydro-testing may be carried out on all elements of the system, including the manifolds and piping. Hydro-testing may be carried out at a suitable time, for example at time of manufacture or before each use. For example, the system may be pressured up and left overnight to check for leakage. In addition, quality control procedures may be carried out, for example including doing a diesel flush in the system to clear all debris. A compressor (not shown) or source of compressed fluid such as inert gas may be provided for clearing the lines and the system of fuel before transport. In another embodiment, the pumps **32**, **34** may be used to clear the lines, for example by pumping pumps **32**, **34** in reverse to pull flow back into the tanks **18**, **20**.

[0029] Referring to FIGS. **4-5**, a top end **46** for another embodiment of a fuel cap **26** is illustrated. The fuel cap **26** assembly illustrated in FIG. **5** may be adapted to connect to the respective fuel tank **12** through a quick-connect coupling **47**, which may comprise a camlock **53**. In some cases the top end **46** may quick connect directly to the fuel tank **12**. In other embodiments such as the one shown in FIG. **5**, the housing **43** comprises a bottom end **57** adapted to connect to the fuel tank **12** for example by threading to a fill riser **59** of fuel tank **12**. The bottom end may be provided in different sizes, for example to accommodate a 2" or 3" opening in the fuel tank or different designs of fill risers **59** such as a Freightliner™ lock top, and also a Peterbilt™ draw tight design. The top end **46** may be connected to the bottom end **57** directly or indirectly through quick connect coupling **47**. Moreover, the housing **43** may further comprise an intermediate portion **61** between top end **46** and bottom portion **61**. Intermediate portion **61** may be threaded to the top end **46** and connected to the bottom end **57** through the quick connect coupling **47**. Although intermediate portion **61** is shown in FIG. **5** as being removably attached to top end **46**, in some cases intermediate portion **61** may be permanently or semi-permanently attached to top end **46** for rotation. Such a rotatable connection between portion **61** and top end **46** may be adapted to channel pressurized fluids under seal, which may be achieved with one or more bearings and dynamic seals (not shown), for example much like the rotatable connection between a fuel hose and hand held fuel dispenser at a fuel service station. In other cases bottom end **57** and top end **46** may connect to fill riser **59** much like a garden hose, with bottom end **57** provided as a threaded collar that seals against a flange at a bottom end of top end **46** through an o-ring seal (not shown).

[0030] Quick connect coupling **47** may comprise an annular bowl **63** shaped to couple with camlock **53**. Annular bowl **63** may be used with other quick connection couplings, and allows top end **46** to be installed at any desired radial angle. An o-ring **65** may be present in bottom end **57** for sealing against intermediate portion **61** upon locking of camlock **53**. One or more of ports **48**, **49**, and **50** may be in a lateral surface **67**, such as an annular surface as shown, of top end **46**. As shown in FIG. **4**, ports **48** (breather port) and **50** (fuel port) are in lateral surface **67**. One or more of ports **48**, **49**, and **50** may be in a top surface **69** of top end **46** (FIG. **5**). Fuel cap **26** may be adapted to connect to male or female connections on fuel tank **12**.

[0031] Referring to FIG. **5**, fuel cap **26** may comprise an overfill prevention valve **71**. Valve **71** may provide independent protection or redundant overfill protection with fuel level sensor **54** (FIG. **2**). Valve **71** may be directly or indirectly connected to port **50**, for example as part of a drop tube **73** assembly. Valve **71** may comprise a float-operated overfill shut off system, for example using one or more floats **75** connected to release one or more flaps **77** to block input fuel flow through drop tube **73** after fuel in tank **12** has reached a predetermined level or levels. The valve **71** illustrated in FIG. **5** is similar to the twin flap system commonly used in underground storage tanks (USTs). Other overfill valve systems may use for example time domain reflectometry or contact sensors to ensure that fuel tank **12** is not overfilled.

[0032] A cabin (not shown) may be added to the system, for example comprising a heater, desk, and access to relevant control equipment. The cabin may have a window with a line-of-sight to the frac equipment. A dashboard may be visible from the cabin, the dashboard containing readouts of system characteristics such as fuel tank **12** levels. A gas detection system (not shown) may be used to detect the presence of leaking gas. In some embodiments, one or more of the hoses **24** may be provided with an auto nozzle fitting attachment to fill pieces of equipment other than fuel tank **12**, in order to obviate the need for an on-site fuel source other than the fuel system disclosed herein. An electrical box (not shown) may be mounted on the skid or trailer with rubber or resilient mounts to reduce vibrational issues.

[0033] Some types of equipment such as frac pumpers have two tanks, which may be connected by equalization lines. In such cases, fuel cap **26** may be connected into the tank **12** opposite the tank **12** under engine draw, in order to reduce the turbulence caused by fuel filling which may cause air to be

taken into the fuel intake, which may affect the performance of the pumper. The return flow from the engine generally goes into the opposite tank from which fuel is drawn.

1. A fuel delivery system for delivery of fuel to fuel tanks of equipment at a well site during fracturing of a well, the fuel delivery system comprising:

a fuel source having plural fuel outlets;

a hose on each fuel outlet of the plural fuel outlets, each hose being connected to a fuel cap on a respective one of the fuel tanks for delivery of fuel to the fuel tank; and

a valve arrangement at each fuel outlet controlling fluid flow through the hose at the respective fuel outlet.

2. The fuel delivery system of claim **1** in which the fuel source comprises at least a tank and a manifold connected via a line to the tank, a pump on the line, and at least some of the fuel outlets being located on the manifold.

3. The fuel delivery system of claim **2** in which each valve arrangement comprises a manually operable valve.

4. The fuel delivery system of claim **1** in which the fuel source comprises at least a tank and at least two manifolds, each manifold being connected via a respective line to the tank, a pump on each line, and plural fuel outlets being located on each manifold.

5. The fuel delivery system of claim **1** in which each fuel cap comprises a breather port.

6. The fuel delivery system of claim **5** in which each breather port comprises a downwardly extending line.

7. The fuel delivery system of claim **1** in which each fuel cap comprises a fuel level sensor.

8. The fuel delivery system of claim **7** provided with automatic fuel delivery by:

the valve arrangement comprising an automatically operable valve on each fuel outlet; and

a controller responsive to signals supplied from each fuel level sensor through respective communication channels to provide control signals to the respective automatically operable valves.

9. The fuel delivery system of claim **8** in which the controller is responsive to a low fuel level signal from each fuel tank to start fuel flow to the fuel tank independently of flow to other fuel tanks and to a high level signal from each fuel tank to stop fuel flow to the fuel tank independently of flow to other fuel tanks.

10. The fuel delivery system of claim **1** in which each hose is connected to a fuel outlet by a dry connection and to a cap by a dry connection.

11. A method of delivery of fuel to selected fuel tanks of equipment at a well site during fracturing of a well, the method comprising:

pumping fuel from a fuel source through hoses in parallel to each of the fuel tanks; and

controlling fluid flow through each hose independently of flow in other hoses.

12. The method of claim **11** further comprising automatically controlling fluid flow in the hoses in response to receiving signals representative of fuel levels in the fuel tanks.

13. The method of claim **11** further comprising preventing spills at each fuel tank by providing fuel flow to each fuel tank through a fuel cap on the fuel tank.

14. The method of claim **11** in which each fuel cap comprises an air vent with a line extending downward.

15. The method of claim **11** in which each fuel cap comprises a fuel level sensor.

16. A fuel delivery system set up for delivery of fuel at a work site, comprising:

a fuel source comprising one or more manifolds connectable to one or more fuel tanks by at least a respective one of one or more fuel lines, and a pump on each fuel line for pumping fuel from the fuel source to the one or more manifolds;

each manifold of the one or more manifolds having multiple fuel outlets, each fuel outlet of the multiple fuel outlets having a connection for a hose and a valve for controlling flow from the fuel outlet that is manually operable; and

each hose having a first end and a second end and being connected at the first end of the hose to a corresponding one of the multiple fuel outlets and having a fuel delivery connection at the second end of the hose for securing the second end of the hose to a fuel tank to which fuel is to be delivered.

17. The fuel delivery system of claim **16** in which the work site is a well fracturing operation.

18. The fuel delivery system of claim **17** provided with automatic fuel delivery by:

an automatic valve responsive to electronic control signals on each fuel outlet;

a fuel level sensor associated with each fuel delivery connection; and

a controller responsive to signals supplied from each fuel level sensor through respective communication channels to provide control signals to the respective automatic valves.

19. The fuel delivery system of claim **18** in which each fuel delivery connection comprises a cap for a respective one of the fuel tanks to which fuel is to be delivered.

20. A cap for a fuel tank, comprising:

a housing having a throat and a top end;

a first port in the top end provided with a connection for securing a hose to the cap; and

a second port in the top end holding a fuel level sensor.

21. The cap of claim **20** further comprising a third port in the top end for exhausting air from the fuel tank during delivery of fuel to the fuel tank.

22. The cap of claim **21** further comprising a line extending from the third port for discharge of air away from the fuel tank.

23. The cap of any one of claim **20** in which the first port comprises an overfill prevention valve.

24. The cap of any one of claim **22** in which the cap comprises a wireless transceiver connected to the fuel level sensor for communicating signals from the fuel level sensor to a remote controller.

25. A fuel delivery system for delivery of fuel to a fuel tank, the fuel delivery system comprising a controller and a fuel source, the fuel source having one or more fuel outlets and for each fuel outlet:

a hose on the fuel outlet, the hose being connected to a fuel cap on a fuel tank for delivery of fuel to the fuel tank, a valve arrangement at the fuel outlet for controlling fluid flow through the hose at the fuel outlet, the valve arrangement comprising an automatically operable valve on the fuel outlet;

the cap including a fuel level sensor; and

the controller being responsive to signals supplied from the fuel level sensor through a communication channel to provide control signals to the automatically operable valve.

26. The fuel delivery system of claim **25** in which the fuel source comprises at least a tank and a manifold connected via a line to the tank, a pump on the line, and at least some of the fuel outlets being located on the manifold.

27. The fuel delivery system of claim **25** in which each valve arrangement comprises a manually operable valve.

28. The fuel delivery system of claim **25** in which the fuel source comprises at least a tank and at least two manifolds, each manifold being connected via a respective line to the tank, a pump on each line, and plural fuel outlets being located on each manifold.

29. The fuel delivery system of any one of claim **25** in which each fuel cap comprises a breather port.

30. The fuel delivery system of claim **29** in which each breather port comprises a downwardly extending line.

31. The fuel delivery system of any one of claim **25** in which the controller is responsive to a low fuel level signal from each fuel tank to start fuel flow to the fuel tank independently of flow to other fuel tanks and to a high level signal from each fuel tank to stop fuel flow to the fuel tank independently of flow to other fuel tanks.

* * * * *