Feb. 10, 1931. E. P. HALLIBURTON ET AL 1,791,498

METHOD OF AND APPARATUS FOR DIFFERENTIALLY APPLYING POWER

Filed Sept. 19, 1924 3 Sheets-Sheet 1

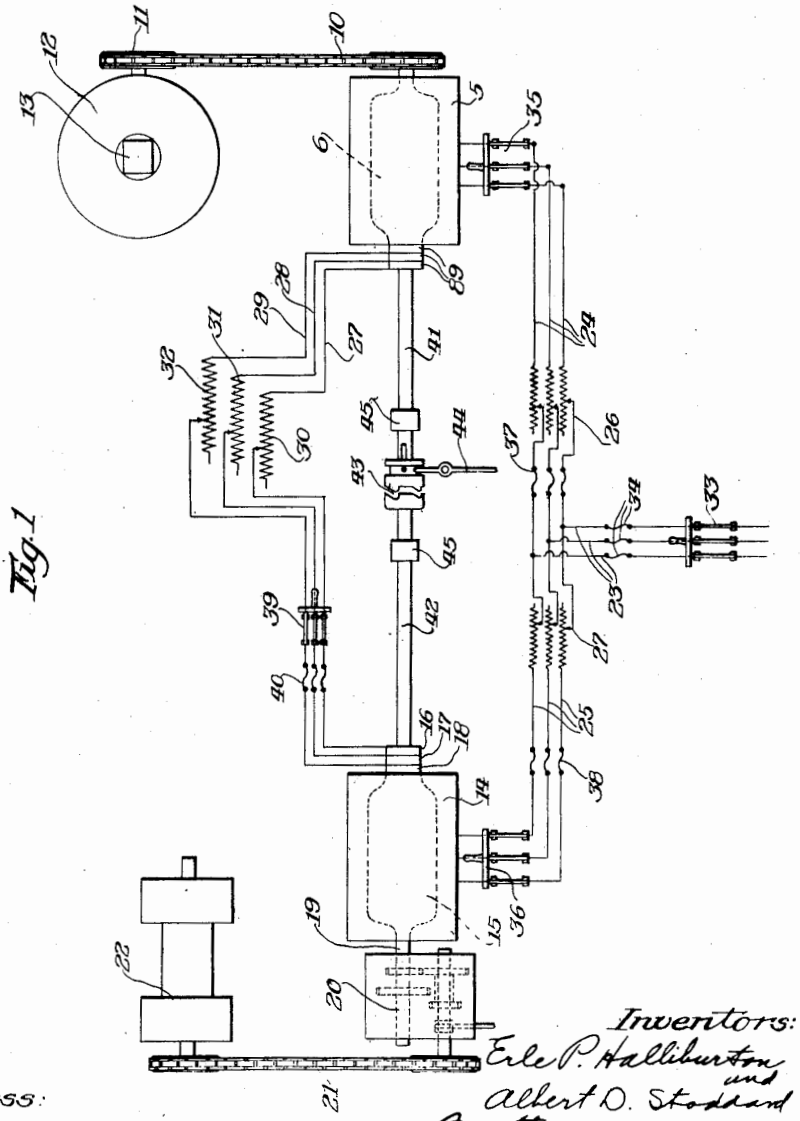

U.S. Well - Exhibit 2050
Liberty v. U.S. Well - IPR2024-01274
Page 1 of 8

Feb. 10, 1931. E. P. HALLIBURTON ET AL 1,791,498

METHOD OF AND APPARATUS FOR DIFFERENTIALLY APPLYING POWER

Filed Sept. 19, 1924 3 Sheets-Sheet 2

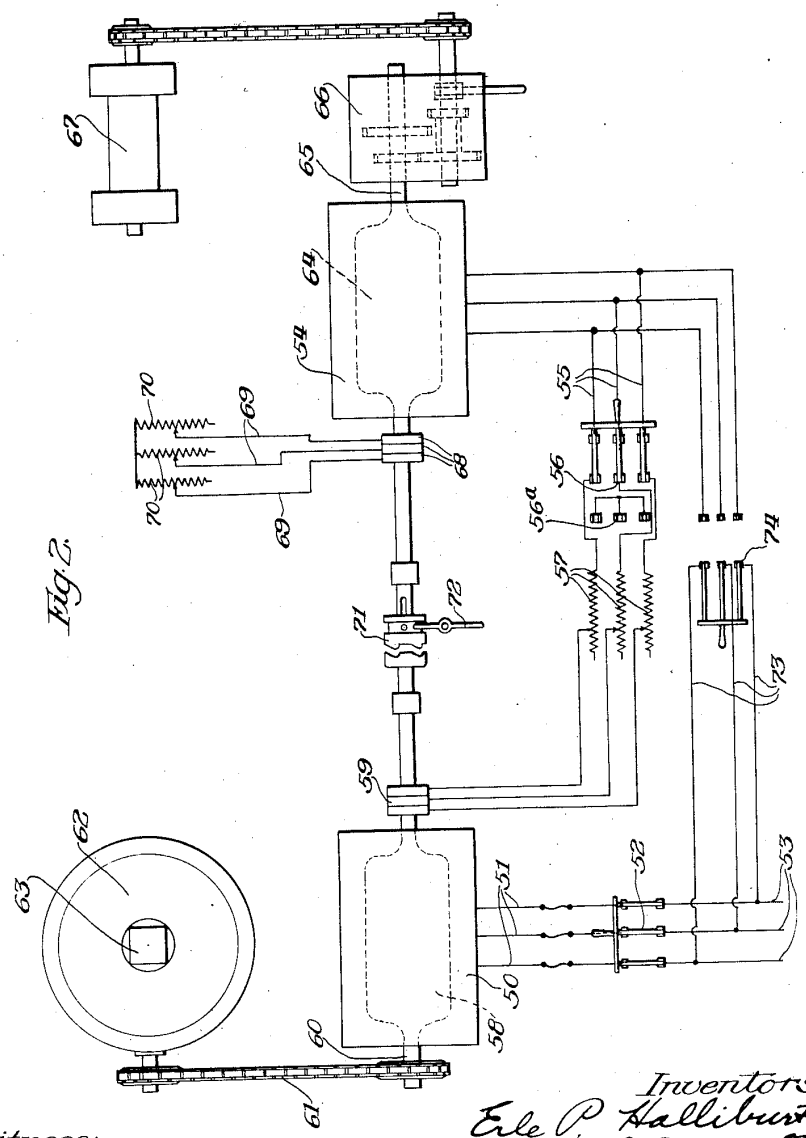

Fig. 2.

Witness:

Geo. C. Davison

Inventors:

Erle P. Halliburton and

Albert D. Stoddard

By attorney

Brendan J. McCann

Feb. 10, 1931. E. P. HALLIBURTON ET AL 1,791,498

METHOD OF AND APPARATUS FOR DIFFERENTIALLY APPLYING POWER

Filed Sept. 19, 1924 3 Sheets-Sheet 3

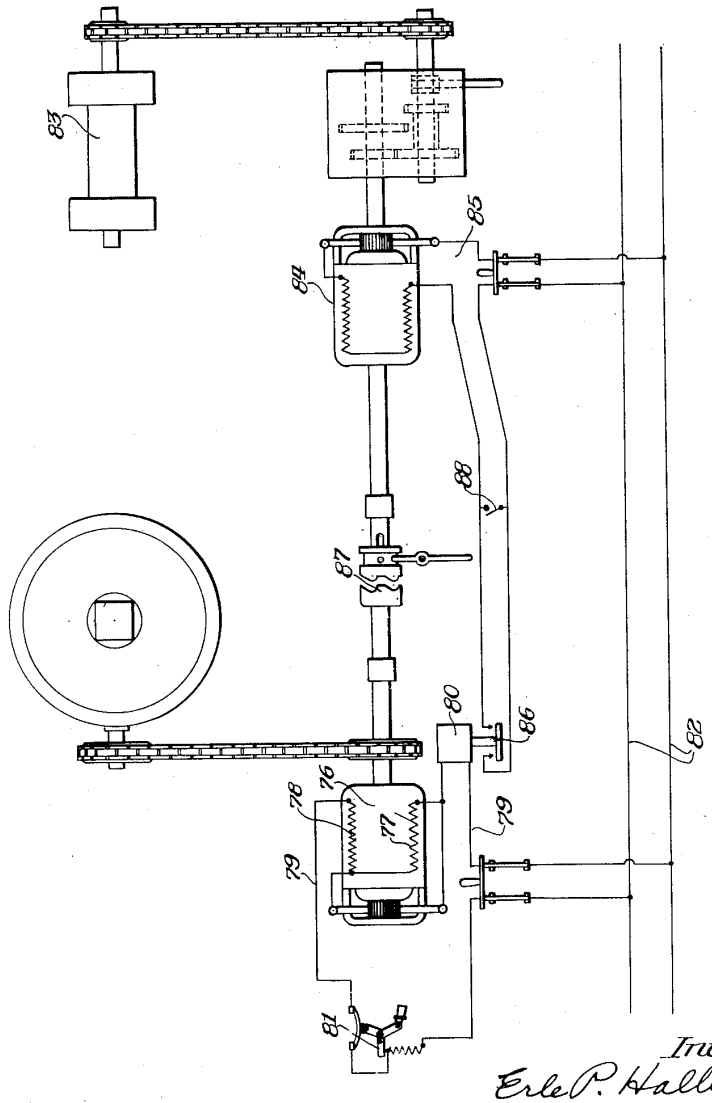

Fig. 3.

Witness:

Inventors
Erle P. Halliburton
and
Albert D. Stoddard
By attorney
Brendan M. Egan

Patented Feb. 10, 1931

1,791,498

UNITED STATES PATENT OFFICE

ERLE P. HALLIBURTON, OF DUNCAN, AND ALBERT D. STODDARD, OF BARTLESVILLE, OKLAHOMA; SAID STODDARD ASSIGNOR TO SAID HALLIBURTON

METHOD OF AND APPARATUS FOR DIFFERENTIALLY APPLYING POWER

Application filed September 19, 1924. Serial No. 738,657.

This invention relates broadly to power transmission and conversion, and more particularly relates to an improved method of and apparatus for differentially converting and applying power.

As exemplary of one application of the present invention and for convenience in description, this method and apparatus is somewhat schematically illustrated and more particularly described for employment in the drilling of wells, particularly with respect to oil wells and the like, where great depth must be reached, and has reference in this connection to the rotary well drilling method as will appear, though it will be understood that the invention may be adapted for other purposes in the transmission and conversion of power, and therefore, finds a wide field of utility.

In drilling an oil well, or the like, with a rotary drilling apparatus, the methods heretofore employed and known to me have entailed a great deal of expense, and at the same time danger of fracture and even in some cases loss of the drill due to the jamming of the drill in the well, caused by severe strains, which either necessitates an expensive fishing operation or even abandonment of the well.

The jamming of the drill in the well, unless carefully watched and immediately relieved by an operator, will twist off the drill, and is due to various causes, most commonly that produced by striking a hard formation in the earth, or by the drill striking a formation which slants and along which the drill slides and bends instead of cutting straight through.

It is the principal object of this invention to provide a method of and apparatus for carrying out such method whereby jamming of the drill is rendered impossible as long as the apparatus is in proper working condition, the present method involving the employment of means which will automatically relieve the drill of any torsional strain and withdraw it from the work immediately upon its jamming, or upon the application to the drill of a dangerous degree of strain, and a further object is to accomplish this by employment of electrical energy.

In carrying out the method involved in the present invention, we have employed as a source of power electric current supplied to electric motors which operate in conjunction to control each other, that is, the motors are intended normally to alternately operate, one of the motors being connected to the drilling table, commonly called the rotary table, and the other being connected to a suitable hoist which is in turn, by means of a cable, connected to the drill and by means of which the drill is lowered into and raised from the work.

Other objects and advantages of this invention reside in the provision of an improved method of and apparatus for conversion and application of differential power; the provision of an improved method of and apparatus for conversion of electric energy into mechanical energy; the provision of an improved method of differentially applying electrical energy; the provision of an improved method of and apparatus for the conversion of electrical energy into mechanical energy characterized by the function of differentially controlling the application of the mechanical energy; the provision of an improved method of and apparatus for differentially applying power; the provision of an improved method of and apparatus for differentially applying power subject to manual control and variation; the provision of an improved method of and apparatus for the conversion and application of power differentially subject to manual control; the provision of an improved method of and apparatus for conversion of electrical into mechanical energy automatically; the provision of an improved method of converting electrical into mechanical energy and to differentially apply such mechanical energy; the provision of an improved method of and apparatus for converting electrical into mechanical energy and for automatically differentially affecting the electrical energy and its production of mechanical energy; the provision of an improved method of an apparatus for drilling oil wells and the like; the provision of an improved method of automatically drilling oil wells and the like; the provision of an improved method of employ-

ing electrical energy for drilling oil wells and the like; and the provision of an improved apparatus of the character referred to which is relatively simple in construction, extremely flexible in operation, and economical and efficient in operation.

The foregoing and such other objects and advantages as may appear or be pointed out as this description proceeds are attained in the embodiment of this invention which is somewhat schematically illustrated in the drawings.

Figure 1 is a diagrammatic view of an apparatus for carrying out the method of this invention; and

Figures 2 and 3 are alternative forms of the apparatus.

The method involved in the present invention and as more particularly adapted to the drilling of oil and other wells, and the like, and including the employment of electrical energy for this purpose, comprises essentially the supplying of electrical energy through separate paths to electro-magnetically operated elements, and control of the ratio of electrical energy passing to and between such elements, and effecting variations in the operation of one of said elements in accordance with the operation of the other of such elements to produce a differential application of power to a predetermined point.

Such electrical elements are operated by the current supplied, and the pressure impressed by one of such elements upon the other of such elements for producing a motion or motions differentially and directly in proportion to the work done by such electro-magnetic elements.

The method also may include regulation of the initial supply of current to one or all of the electro-magnetic units, regulation of the effect of one or more of such elements upon one or the rest of the elements, or may include both of such features of regulation.

It is well-known by those skilled in the art that electric motors, particularly of the induction or repulsion induction type, upon overload or stalling draw a large current from the line, and upon this principle the functions of the present invention largely rely.

In carrying out the method of this invention, we have found it expedient to employ alternating current, and two induction motors of the slip ring type, that is, the stator or field of each motor is connected to the line, and their rotors are provided with two or more slip or collector rings which, for purposes of this invention, are electrically connected in each instance, through a variable inductance for the purpose presently to be described.

One of the motors thus provided, when employed for drilling wells and the like, is connected to the rotary table which drives the drill, and the other motor is connected to the hoist or draw-works which serves to elevate the drill bit under predetermined conditions.

Referring now more particularly to the drawing, 5 designates an electric motor of the induction type including the conventional stator or field winding, and a rotor indicated at 6, the latter being provided with collector rings 7, 8 and 9. The motor 5 is connected by suitable gearing, either a chain, belt or the like, 10, to the driving element 11, which is suitably geared to the rotary table 12, in which latter is mounted a drill-rod 13.

A motor 14 is provided of the induction type including similar elements to that of the motor 5, that is, a rotor 15, provided with collector rings 16, 17 and 18, and a stator or field winding.

The rotor shaft of the motor 14, indicated at 19, is connected through a suitable change speed gearing 20, driving belt 21, and the hoisting drum 22, to a cable (not shown), which forms the draw-works of the drilling rig, and which cable is connected to the drill-rod for raising and lowering the drill.

In the present instance, a source of polyphase alternating current is supplied to both of the motors by the provision of the line conductors 23, and it will be obvious that in the conductors 24 and 25, leading to the motors 5 and 14, respectively, a suitable regulating means in the form of variable inductances 26 and 27 may be provided for regulating the speed or relative pressure imposed upon the two motors from the line. This regulating means is not absolutely essential if the two motors are, when originally designed, properly proportioned as to horse power and torque.

The collector rings 7, 8 and 9, are connected to the collector rings 16, 17 and 18, respectively, by provision of conductors 27, 28 and 29, and in each of said conductors there is interposed a variable inductance 30, 31 and 32, respectively.

In the line conductors 23 there may be placed a switch 33 and protecting devices such as fuses 34, and in the conductors 24 and 25 to the motors, switches 35 and 36 and fuses 37 and 38 may be provided. Similarly, in the circuit connecting the slip rings, a switch 39 and fuses 40 may be provided.

The arrangement of circuits as illustrated affords means whereby the two motors may be individually operated in the event of accident to one or the other of the motors and also provides for simultaneously operating the motors independently of each other for various purposes.

The rotor shafts of the motors are extended as shown at 41 and 42 and are connectible by a clutch 43 operable by a lever 44, suitable bearings 45—45 being provided for said shafts. This arrangement affords means whereby, both of the motors may be connected

together by shifting the clutch and thus both motors may be employed for drilling, or both may be employed for hoisting.

In the operation of the apparatus as shown for carrying out the method described, both of the motors are connected to the line, and the required amount of inductance is placed between the rotors of said motors, in the slip ring circuit, such inductance being adjusted so that when both motors are running with equal speed and equal load their rotor circuits will be substantially balanced.

Should it be desired to adjust the power applied in the drilling, more or less of the variable inductance is placed in circuit by a suitable controller, such as indicated at 26, or in the event that the relative power of the two rotors requires variation, a variation of one or more of the variable inductances, 30, 31 and 32 may be made.

When the motor 5 is operating to drive the rotary table, a polyphase alternating current is generated in the rotor circuit of said motor, directly proportional to the load on the motor, or in other words, directly proportional to the slip, which is the difference between the synchronous speed of the motor and its actual speed. The voltage thus generated by means of the conductors 27, 28 and 29, and the slip rings of the two motors, is impressed upon the rotor circuit of the induction motor 14, and as this pressure or electromotive force generated in the rotor of the motor 5 varies inversely with the speed and directly with the load impressed on motor 5, it will as a consequence supply a greater or less amount of current to the rotor of the motor 14, therefore increasing or decreasing the speed of the motor 14, or if the motor 14 is at rest, will start said motor. This effect takes place in proportion even though the motor 5 is stalled by overload, such as for instance, where the drill suddenly jams. It will be observed that if an overload is suddenly applied to motor 5, either slowing it down or stalling said motor, the motor 14, if at rest, commences to run and its speed and power are immediately increased.

Either of the induction motors shown will stand stalled for a considerable period of time without undue heating, and at the same time retain their respective torques or starting efforts.

As the source of power from the line is, in starting, simultaneously applied to both motors, the tendency of such motors is to turn in a direction against resistance. While the tendency of the motors is thus to rotate in the direction which they are intended to normally run it will be seen that any tendency to rotate in the opposite direction is counteracted by the flow of current through the slip ring circuit defined by the conductors 27, 28 and 29, and the inductances 30, 31 and 32. When the load on each motor is such that the motor 5 is driving the rotary table, and is balanced by the motor 14 tending to raise the tools by means of drawwork, though continuously rotating in a direction to lower the tools then said motor 5 will continue to revolve, driving the bit at a predetermined speed. Should the bit become involved in a hard formation or otherwise resist the power of the motor 5 to such an extent that the motor 5 is decreased in speed, the voltage induced in the rotor of the motor 5 is increased, and therefore the voltage impressed on the rotor circuit of the motor 14 is increased, thereby increasing the torque of the latter and operating said motor to tend to raise the tools that is, either actually raise them or suspend a portion of the weight of the drill stem to thereby maintain substantially constant torque, or until they are released from the hard formation thus relieving the excess load on the motor 5 and permitting it to resume its speed. This action is automatically repeated until the obstruction encountered is overcome. In the event that the motor 14 should operate for a period of time which would cause the tools to be raised clear of the work in the bore, the motor 5 will immediately increase in speed, or if stalled, commence to rotate, thus decreasing the current impressed upon the rotor circuit of the motor 14 and causing such motor to release the tools to such a point as to permit the tools to engage the work and resume drilling operations.

It will be observed that when one of the motors is decreased in speed, due to an increase in load thereon, the other motor starts revolving, or increases its speed, in substantially direct proportion to the rate of decrease in speed of the first mentioned motor, that is, a decrease in speed of the motor 5 results in a substantially corresponding increase in speed of the motor 14, or if the latter is stalled, at a predetermined time, causes said motor 14 to start. Thus, it will be seen that the two motors actually automatically substantially divide the load incident to drilling with substantially an inverse speed ratio and it is this feature which renders the apparatus shown readily applicable to various installations where differential power and speed are desired, such as, for instance, in the driving wheels of an automobile or other motor vehicle. The operation of the motors is such that though the speed is inversely proportional to the load placed thereon, the motors both retain their approximate full load torque and will start under load without difficulty.

We desire to emphasize the fact that any self-starting alternating current induction motor or one operating on at least two phases of alternating current, that is, two, three or six phases, is readily applicable for the pur-

pose of carrying out the method here involved.

As it may be necessary in some instances, particularly in very hard formations, to operate the motor 5 where ordinarily the tools would be withdrawn, the slip ring circuit is variable as to conductivity, the circuit to the motor 14 and to said motor 5 are similarly variable, and a change speed gearing 20 is provided whereby the motor 14 will only operate at a predetermined point in the drilling operation. Of course, it will be understood that the operator will use discretion in the degree to which the drill bit and drill rod themselves are overloaded.

Referring now to the alternative form of the apparatus of this invention illustrated in Figure 2, we provide an induction motor 50, termed the drilling motor, in all essentials similar to the induction motor 5, the stator of the motor 50 being connected, by conductors 51—51 and a switch 52, to the line 53.

We also provide the auxiliary or hoisting induction motor 54, whose stator is connected, by conductors 55—55, triple pole double throw switch 56, and variable inductances 57—57, to the rotor winding 58 of the motor 50, through the slip rings 59—59.

The rotor shaft 60 of the motor 50 is mechanically connected as at 61 to the rotary table 62 for rotatively driving the drill bit 63.

The rotor 64, through its shaft 65, of the auxiliary or hoisting motor 54, is mechanically connected by the provision of reduction or change speed gearing 66 to the hoisting drum 67, which latter is properly connected to the drill rod 63 for raising the drill at the proper time, as will presently appear.

The windings of the rotor 64 are electrically connected together by the slip rings 68—68 and conductors 69—69 through variable inductances 70—70. The rotor shafts 60 and 65 are extended to points immediately adjacent, and a clutch member 71, operable by a lever 72, serves to connect said shafts for a purpose which will presently appear.

The stator winding of motor 54 is connectible by conductors 73 and a switch 74 directly to the line 53. It will be apparent that by opening switch 56, closing switches 52 and 74, and engaging the clutch 71, the motors 50 and 54 may be operated synchronously from the line 53. In the event that the motors do not normally operate at exactly the same rate of power consumption in this instance the switch 56 may be closed to short-circuit the collector rings 59 through variable inductances 57, and by adjustment of these inductances and the inductances 70—70 the motors may be properly operated in synchronism.

In the normal operation in drilling a well or the like, the motor 50 is operated to drive the drill and the switch 56 is closed to connect the rotor winding of the motor 50 to the stator winding of the motor 54. In the event of an overload to a predetermined extent upon the drilling motor 50, the latter is slowed, which increases the current flowing through conductors 55—55 to the stator winding of the motor 54, thereby energizing this motor to raise the drill.

It is apparent that regulation of the quantity of inductance placed in the conductors 55 or 69 results in determination of the amount of load required to be placed upon the drilling motor before the hoisting motor will be sufficiently energized to operate the hoist and raise the tool.

It will be observed that one set of the terminals of the switch 56, as indicated at 56*a*, are short-circuited through inductances 57, so that the motor 50 may be employed, if necessary, for withdrawing the tools from the work.

When in operation connected as shown in Figure 2, it will be understood that the current supplied to the stator winding of the motor 54 is inversely proportional to the speed of the motor 50, as pointed out in connection with Figure 1.

In the event that it is desired to use unidirectional current instead of alternating current, we find it expedient to employ apparatus illustrated in Figure 3.

In this apparatus, we employ what is commonly termed a compound wound direct current motor which is generally designated 76 and includes the conventional shunt field winding 77, and the series field winding 78, said motor being connected by conductors 79, through an overload relay 80 and a circuit breaker 81 to the line conductors 82. The compound wound motor is connected to the drill for driving the same and we employ this type of motor for this purpose for the reason that it maintains a substantially constant speed in drilling and is yet possessed of a substantial starting torque.

The draw-works 83 is operated by a series wound motor 84, the circuit 85 of which is controlled by a switch 86 actuated by the overload relay 80, so that when the drilling motor is overloaded to such an extent that a predetermined current is drawn thereto from the line or that such motor becomes stalled, due to the resistance of the drill, the current passing through the overload relay will close the circuit to the hoisting motor and thus relieve the drill of undue strain, and permit the same to be withdrawn slightly from the work. As soon as the load is relieved from the drilling motor, the current drops in the overload relay permitting the switch to open the hoisting motor circuit and the drill falls by gravity to the work, thus resuming the drilling operation, the drilling motor in the meantime again taking up the load and increasing its speed. The operation of this apparatus is

U.S. Well - Exhibit 2050
Liberty v. U.S. Well - IPR2024-01274
Page 7 of 8

entirely automatic and is similar in the ultimate results obtained to those attained in the apparatus of Figure 1.

A clutch 87 is provided for mechanically connecting the armature shafts of the motor 76 and 84, and a cut-out switch 88 serves to complete the circuit 85 when desired irrespective of the overload relay 80, for instance, where both motors are employed for withdrawing the tools from the well.

Having thus described our invention and illustrated its use, what we claim as new and desire to secure by Letters Patent is:

1. In an apparatus of the character described, the combination of a vertically disposed rotatable element, means for suspending said element and for imparting rotation thereto which means includes two mutually actuating electro-magnetic members each including a rotor so interconnected as to electrically and mechanically react upon the other for affecting the forces exerted by each, and one of said rotors being connected to said means for suspending the said vertically disposed element and the other of said rotors being connected to said means for rotating said element.

2. In an apparatus of the character referred to, an electric motor adapted to be connected to impart rotation to a rotatable and slidable element, a second electric motor adapted to be connected so as to impart sliding movement to such element, variable means for electrically connecting the secondary windings of said motors to vary the effect of one of said motors on the other thereof, and the primary windings of said motors being connected to a source of current supply, whereby in operation the load imposed on the first motor due to resistance to rotation of said element will generate an E. M. F. in the secondary winding thereof to increase the current supplied to the second motor and thereby tend to impart sliding movement to said element independently of the rotation thereof.

3. In combination, an electric motor mechanically connected to impart motion to an element to be driven under load, a second motor mechanically connected to impart motion to said element under a separate load, means for supplying current to the motors, and means for connecting and controlling the secondary windings of said motors so as to cause the load on one of said motors to change the effect of the other motor on its load whereby a substantially constant torque is maintained by the first named motor on said element to be driven and means for mechanically connecting the rotors of said motors for causing the motors to operate in unison.

4. An apparatus of the character described comprising two electrical motors, a vertically disposed element, means for connecting the rotor of one of said motors to rotate said element and means for connecting the other motor to sustain part of the weight of said element, means for simultaneously supplying current to both of said motors, and means interconnecting the secondary windings of said motors whereby the resistance to the rotation of the first motor electrically reacts upon the second motor to cause the latter to suspend so much of the weight of the element as will maintain such resistance to rotation substantially constant.

5. An apparatus comprising two electrical motors, a vertically disposed element, means connecting one of said motors to rotate said vertically disposed element, means connecting the other motor to suspend part of the weight of said element, means for supplying current to both of said motors, a circuit connecting the secondary windings of said motors, and means in said circuit for regulating the current thus superimposed from the first motor on the second motor to cause the second motor to suspend so much of the weight of the element to be driven as will maintain the resistance to rotation of the first motor substantially constant.

6. An apparatus of the character described which comprises a vertically disposed element to be driven, an electric motor for imparting rotation thereto, an auxiliary motor for suspending part of the weight of said vertically disposed element, a circuit for connecting the secondary windings of said motors, and means in said circuit for causing the load generated in the first motor to generate a current passing to the secondary of the second motor so as to cause the second motor to be normally stalled in operation but to start in operation upon the predetermined overloading of the first motor.

7. An apparatus of the character described comprising two electrical motors, one electric motor being connected with the load which the motor is normally adapted to rotate, the other electric motor being connected with a load sufficient to normally stall the motor, and means for connecting the secondary windings of said motors, said means including means for adjusting the electric current generated in the secondary of the normally moving motor to normally be insufficient to cause the normally stalled motor to operate but being sufficient when the load upon the normally moving motor exceeds a predetermined amount for causing the normally stalled motor to operate.

In testimony whereof we have hereunto signed our names.

ERLE P. HALLIBURTON.
ALBERT D. STODDARD.

U.S. Well - Exhibit 2050
Liberty v. U.S. Well - IPR2024-01274
Page 8 of 8