US 20040219040A1

(19) United States

(12) Patent Application Publication (10) Pub. No.: US 2004/0219040 A1

Kugelev et al. (43) Pub. Date: Nov. 4, 2004

(54) DIRECT DRIVE RECIPROCATING PUMP

(76) Inventors: **Vladimir Kugelev**, Arlington, TX (US); **Mark D. Matzner**, Burleson, TX (US)

Correspondence Address:
Attention: James E. Bradley
BRACEWELL & PATTERSON, L.L.P.
P.O. Box 61389
Houston, TX 77208-1389 (US)

(21) Appl. No.: **10/833,921**

(22) Filed: **Apr. 28, 2004**

Related U.S. Application Data

(60) Provisional application No. 60/466,715, filed on Apr. 30, 2003.

Publication Classification

(51) **Int. Cl.**[7] **F04B 1/12**

(52) **U.S. Cl.** **417/415**

(57) **ABSTRACT**

The invention includes an apparatus for pumping a fluid through a reciprocating pump. Several motors are responsible for operating the pump assembly. Each of the motors has a drive shaft. The motor drive shafts are connected to a series of drive gears. The drive gears are operably connected to a single driven gear for rotating the driven gear. The single driven gear connects with the pump assembly and drives the reciprocating pump in order to force fluid through the reciprocating pump.

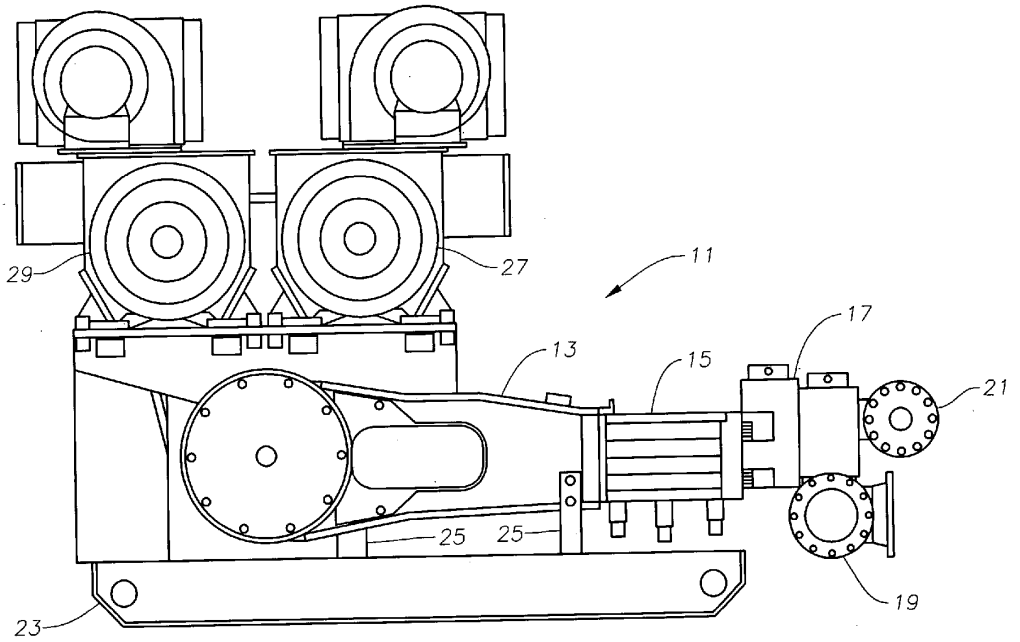

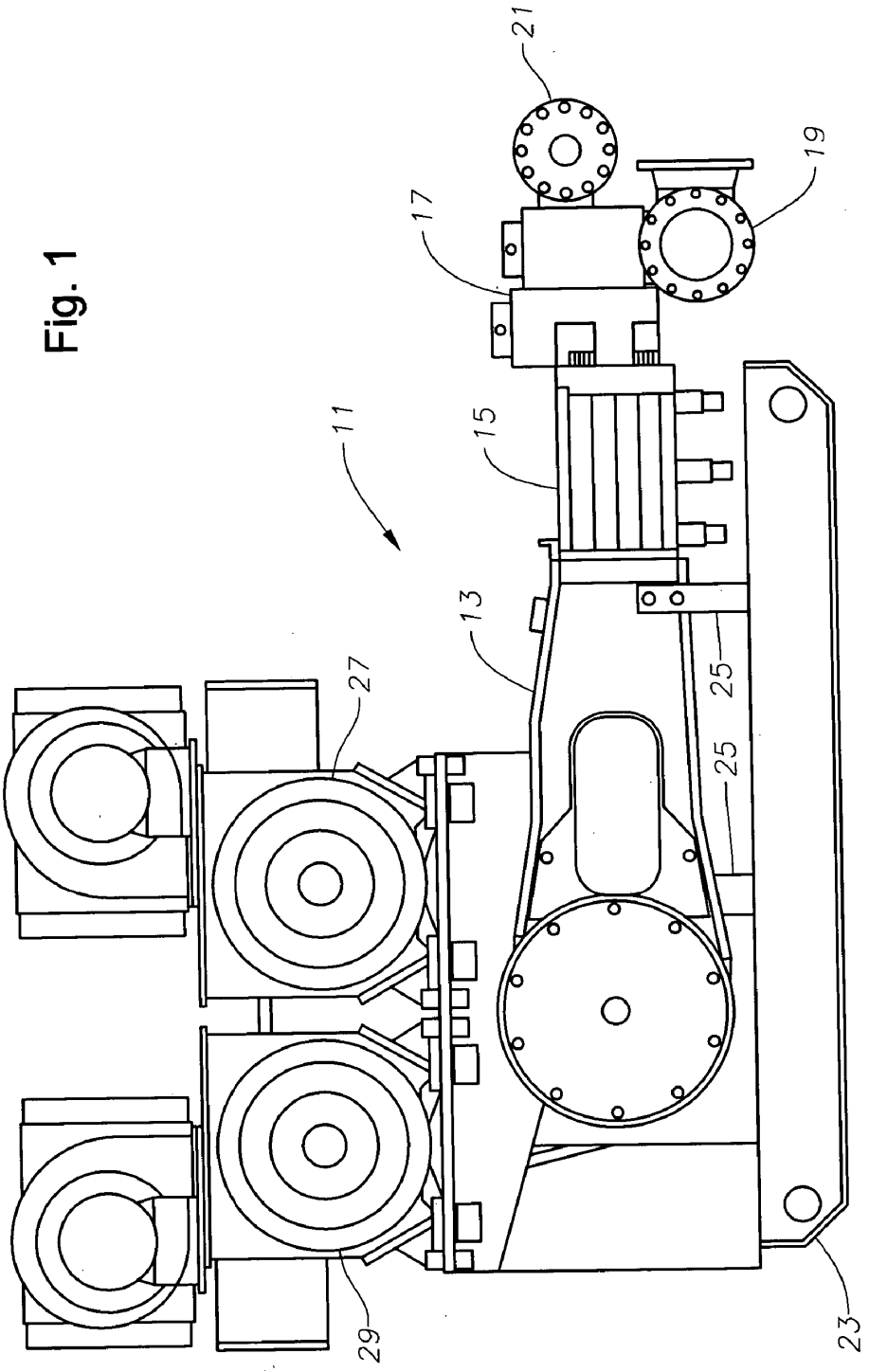

Fig. 1

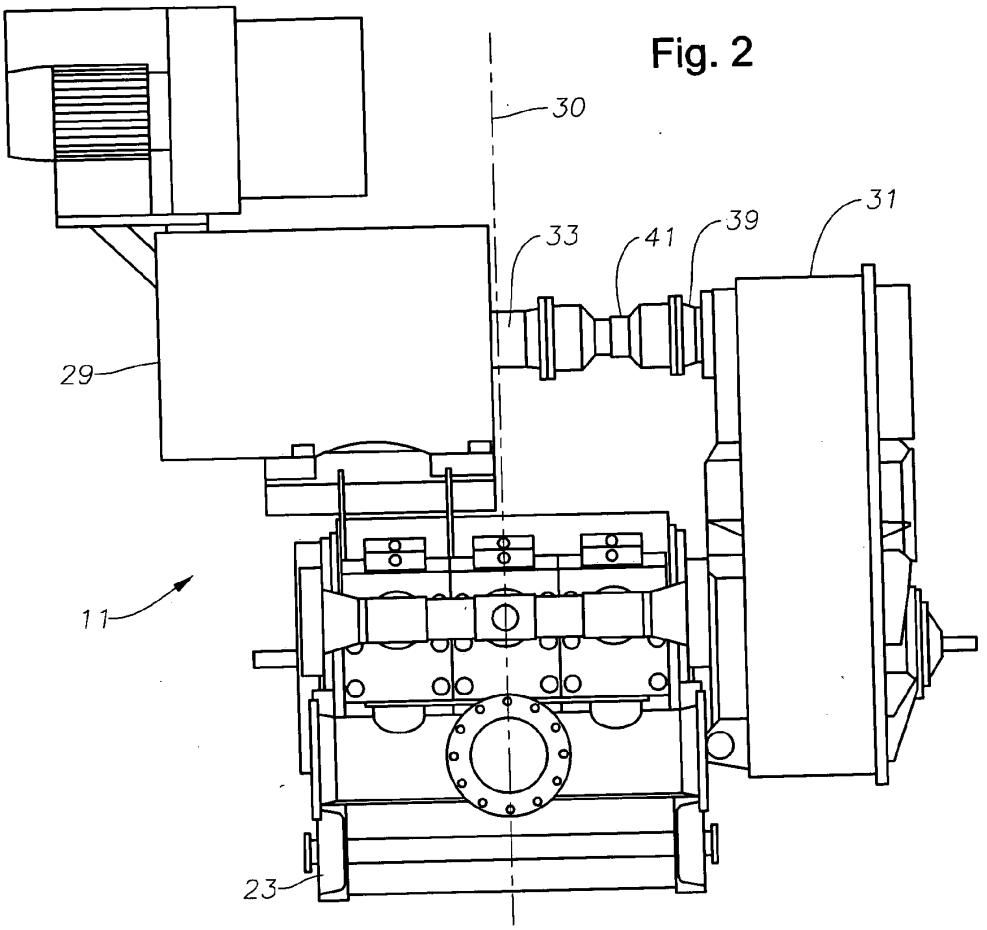

Fig. 2

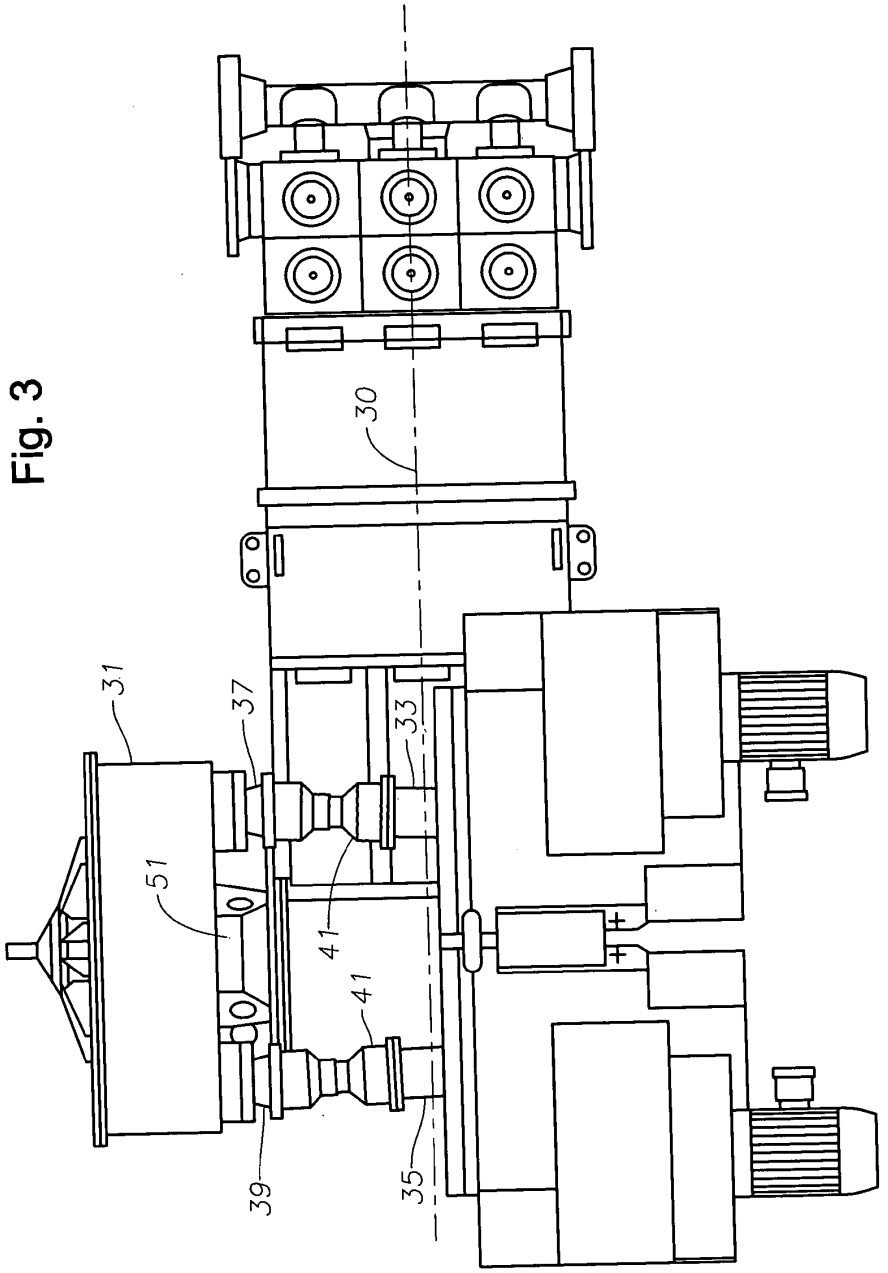

Fig. 3

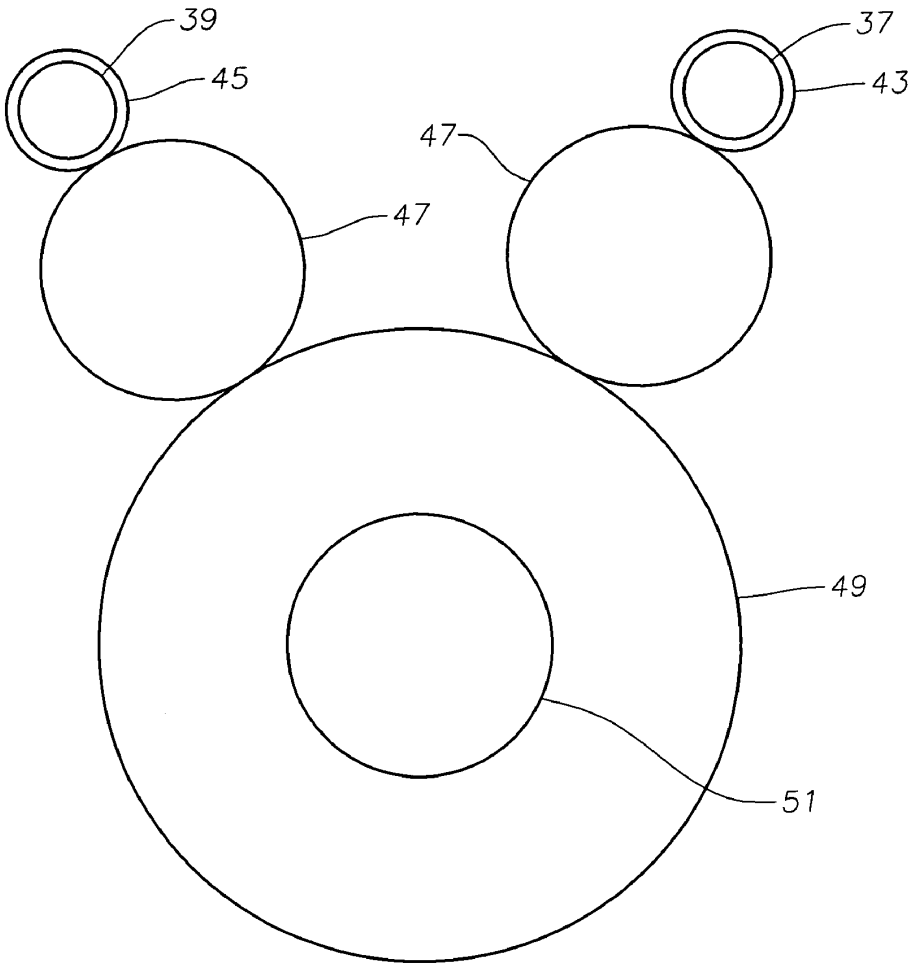

Fig. 4

DIRECT DRIVE RECIPROCATING PUMP

RELATED APPLICATIONS

[0001] This application claims the benefit under Section 119(e) of U.S. Provisional Application Ser. No. 60/466,715, filed Apr. 30, 2003, titled "Direct Drive Reciprocating Pump."

FIELD OF THE INVENTION

[0002] The present invention relates generally to reciprocating pumps, and more specifically to the drive assembly of an oilfield mud or service pump.

BACKGROUND OF THE INVENTION

[0003] Various kinds of pumps have been used in oilfield operations. Two examples of pumps are a well service pump and a mud pump. Well service pumps are used for pumping cement or chemicals into the well and are typically mounted on a skid or a truck. Well service pumps typically operate in short time intervals, and are repeated later after servicing. Mud pumps circulate drilling mud down the borehole during drilling. Mud pumps typically operate in a continuous manner without interruption. Mud pumps also typically have a longer stroke, for which reason mud pumps tend to have a larger size and weight.

[0004] One prior version of a mud pump has two electric motors, a belt, or a chain, or a single drive shaft and gear, with each electric motor having a separate drive train. In this manner, prior mud pumps were typically fairly large in size. In other prior mud pumps, a gear unit is positioned inside the pump unit rather than on the outside of the pump unit. Because the gear unit was positioned inside the pump unit, such prior versions of mud pumps were not compact in size and were also of considerable weight. Mobile service pumps normally have only a single motor, which is located on one side of the pump. It has long been a desire to reduce the size and weight of oilfield service pumps and oilfield mud pumps, without sacrificing capacity. This is particularly desirable for mobile pumps mounted on trucks or skids.

SUMMARY

[0005] The invention includes an apparatus for pumping a fluid through a reciprocating pump. Several motors are responsible for operating the pump assembly. Each of the motors has a drive shaft. The motor drive shafts are connected to a series of drive gears. The drive gears are operably connected to a single driven gear for rotating the driven gear. The single driven gear connects with the pump assembly and drives the reciprocating pump in order to force fluid through the reciprocating pump.

[0006] In one embodiment of many possible embodiments, the motors are located on one side of a longitudinal center line of the pump, and the gears are located on the opposite side of the longitudinal centerline. The motor shafts extending from the motors are parallel to each other and are perpendicular to the longitudinal centerline of the pump.

BRIEF DESCRIPTION OF THE DRAWINGS

[0007] **FIG. 1** is a side elevational view of the reciprocating pump assembly constructed in accordance with the present invention.

[0008] **FIG. 2** is a front elevational view of the reciprocating pump assembly shown in **FIG. 1**.

[0009] **FIG. 3** is a top plan elevational view of the reciprocating pump assembly shown in **FIG. 1**.

[0010] **FIG. 4** is a schematic view of the gear assembly for the reciprocating pump assembly shown in **FIG. 1**.

DETAILED DESCRIPTION OF THE PREFERRED EMBODIMENT

[0011] Referring to **FIG. 1**, a reciprocating pump assembly **11** includes a pump housing **13**, which encloses a crankshaft (not shown) and a crosshead (not shown) of reciprocating pump assembly **11**. Pump housing **13** extends substantially horizontal to the ground or a support surface, and away from the crankshaft (not shown) toward a piston rod housing **15** that encloses a piston rod that is attached to the crosshead. A cylinder **17** is connected to the end of piston rod housing **15** extending away from pump housing **13**. A piston (not shown) reciprocates to pump fluids through cylinder **17**. In the preferred embodiment, the crankshaft (not shown) drives three pistons (not shown) for pumping fluid through three cylinders **17**. While depicted as a triplex with three cylinders **17**, as will be readily apparent to those skilled in the art, pump assembly **11** can alternatively also have different numbers of cylinders, such as five cylinders. In the preferred embodiment, a common intake manifold **19** supplies fluid to be pumped by pump assembly **11**. A common exhaust manifold **21** receives the fluid being discharged by pump assembly **11**. A skid having a plurality of rails **23**, which are connected to reciprocating pump assembly **11** through supports **25**, support reciprocating pump assembly **11**.

[0012] In the preferred embodiment, a plurality of motors **27**, **29** drive reciprocating pump assembly **11**. Motors **27**, **29** preferably include a forward motor **27** located substantially above pump housing **13** and offset toward cylinder **17**, and a rearward motor **29** substantially located above pump housing **13** and offset rearward farther from cylinder **17** than motor **27**. As best shown in **FIG. 1**, motors **27**, **29** preferably straddle the portion of piston pump housing **13** that houses the crankshaft (not shown), and are mounted to the top of housing **13**. As shown in the top view of **FIG. 3**, motors **27**, **29** are both located on one side of a longitudinal center line **30** passing through pump assembly **11**.

[0013] Referring to **FIGS. 2 and 3**, a single gear assembly **31** is connected to motors **27**, **29** for communicating rotational movement from motors **27**, **29** to the crankshaft (not shown). Gear assembly **31** is located on the opposite side of centerline **30** from motors **27**, **29**. A forward motor drive shaft **33** extends from a forward motor **27** toward gear assembly **31**, and a rearward motor drive shaft **35** extends from rearward motor **29** toward gear assembly **31**. Shafts **33**, **35** are parallel to each other and perpendicular to centerline **30**. A forward gear shaft **37** extends toward forward motor drive shaft **33**, and a rearward gear shaft **39** extends toward rearward motor drive shaft **35**. A flexible coupling **41** connects forward motor drive shaft **33** to forward gear shaft **37**. Likewise, another flexible coupling **41** connects rearward motor drive shaft **35** with rearward gear shaft **39**. Gear assembly **31** receives rotational movement from motors **27**, **29** and translates the rotational movement to a single gear shaft **51** (**FIG. 4**), which drives the crankshaft (not shown)

of reciprocating pump assembly **11**. In the preferred embodiment, drive shafts **33**, **35** connect to gear assembly **31** at an elevation above pump housing **13**, and gear assembly **31** translates rotational movement to the crankshaft (not shown) at an elevation substantially the same as pump housing **13**.

[**0014**] Referring to **FIG. 4**, an inside portion of gear assembly **31** is shown schematically in more detail. In the preferred embodiment, an forward pinion **43** is located on the end of forward gear shaft **37** extending away from coupling **41** (**FIG. 3**). A rearward pinion **45** is located on the end of rearward gear shaft **39** extending away from the other flexible coupling **41** (**FIG. 3**). In the preferred embodiment, forward pinion **43** and rearward pinion **45** are at substantially the same elevation and positioned a pre-selected distance apart. In the preferred embodiment, an intermediate gear **47**, which is offset and located substantially below forward pinion **43**, engages forward pinion **43** so that intermediate gear **47** rotates as forward motor **27** rotates forward gear shaft **37** forward pinion **43**. In the preferred embodiment, another intermediate gear **47** is also located substantially below and offset from rearward pinion **45** so that rearward motor **29** rotates rearward pinion **45** and intermediate gear **47**. In the preferred embodiment, intermediate gears **47** are located a pre-selected distance apart from each other and are closer together than forward and rearward pinions **43**, **45**. In the preferred embodiment, intermediate gears **47** are larger in diameter than pinions **43**, **45** so that the rotational velocity of intermediate gears **47** is smaller than the rotational velocity of pinions **43**, **45**.

[**0015**] A main gear **49**, located substantially between and below intermediate gears **47**, is engaged by each of intermediate gears **47** so that intermediate gears **47** translate rotational movement to main gear **49** when pinions **43**, **45** rotate. In the preferred embodiment, intermediate gear **47** and forward pinion **43** are offset so that the center points of forward pinion **43**, intermediate gear **47**, and main gear **49** are substantially linear. Rearward pinion **45** and intermediate gear **47** are also offset so that the center points of rearward pinion **45**, intermediate gear **47**, and main gear **49** align substantially linearly. In the preferred embodiment, the arrangement of pinions **43**, **45**, intermediate gears **47**, and main gear **49** is substantially V-shaped. A gear shaft **51** extends from main gear **49** and connects to the crankshaft (not shown) extending through pump housing **13** for driving pump assembly **11**. In the preferred embodiment, main gear **49** is substantially larger than each intermediate gear **47**, thereby also reducing the rotational velocity of gear shaft **51** relative to pinions **43**, **45**.

[**0016**] In operation, motors **27**, **29** receive an electrical current. Motors **27**, **29** rotate motor drive shafts **33**, **35** extending substantially parallel to each other from motors **27**, **29**. Flexible couplings **41** connect motor drive shafts **33**, **35** to gear shafts **37**, **39** extending toward gear assembly **31**. Motor drive shafts **33**, **35** translate rotational movement from motors **27**, **29** to gear shafts **37**, **39**. Gear shafts **37** and **39** rotate pinions **43**, **45**, which in turn engage each of their respective intermediate gears **47**. As is evident from **FIG. 4**, the rotational velocity of each intermediate gear **47** is less than the rotational velocity of either pinions **43** or **45**. Each intermediate gear **47** engages main gear **49** to translate rotational movement to gear shaft **51**. Gear assembly **31**, through pinions **43**, **45**, intermediate gear **47**, and main gear **49**, translates rotational movement from motors **27**, **29**, while reducing the rotational speed of gear shaft **51** extending out of gear assembly **31**.

[**0017**] The invention offers important advantages associated with the positioning of the gear unit on the outside of the pump unit rather than inside the pump unit itself. In this respect, the invention provides the pump with a more compact size and lighter weight. It provides easier mobility and transport for use in mobile oil rigs, resulting from the smaller size and lighter weight. The invention would provide for more convenient service to the pump, and thus less spare parts resulting from operation breakdowns. In summary, the invention provides a more efficient and reliable pump assembly that enhances overall performance.

[**0018**] It should be apparent to those skilled in the art that it is not so limited, but is susceptible to various changes without departing from the scope of the invention. For example, the different arrangement of gears inside of gear assembly **31** could be utilized to perform substantially the same functions of translating rotational movement to the crankshaft (not shown) of reciprocating pump assembly **11** with additional intermediate gears, or a different arrangement of pinions **43**, **45** so that they are not substantially V-shaped while still providing enough space for the placement of more than one motor.

[**0019**] Although the present invention has been described in detail, it should be understood that various changes, substitutions, and alterations can be made hereupon without departing from the principle and scope of the invention. Accordingly, the scope of the present invention should be determined by the following claims and their appropriate legal equivalents.

That which is claimed is:

1. An apparatus for pumping a fluid, comprising:

a reciprocating pump;

a plurality of motors each having a motor shaft;

a plurality of drive gears, each of the drive gears being connected to one of the motor shafts; and

a driven gear connecting to the pump for driving the pump, each of the drive gears being operably connected to the driven gear for rotating the driven gear.

2. The apparatus of claim 1, wherein the driven gear has an angular velocity less than the angular velocity of the drive gears.

3. The apparatus of claim 1, wherein U-joints are positioned at each end of the motor shafts.

4. The apparatus of claim 1, wherein the pump has a forward end and a rearward end, and wherein one of the motors is closer to the forward end and other of the motors are closer to the rearward end.

5. The apparatus of claim 1, wherein the motor shafts are parallel to each other and perpendicular to a longitudinal centerline of the pump.

6. The apparatus of claim 1, wherein the motors are located on one side of a longitudinal centerline of the pump, and the gears are located on the opposite side of the longitudinal centerline.

7. The apparatus of claim 1, wherein the pump has a housing, and wherein the gears are located exterior to the housing.

8. A reciprocating pump assembly, comprising:

a pump having a crankshaft, a connecting rod, and a piston;

a pair of electrical motors mounted side by side, each motor having a drive shaft extending perpendicular to the connecting rod;

a gear box having a pair of inputs, each input of the gearbox being connected to one of the drive shafts, the gear box having a single output operatively connected to the crankshaft.

9. The apparatus of claim 8, wherein U-joints are positioned at each end of the drive shafts.

10. The apparatus of claim 8, wherein the pump has a forward end and a rearward end, and wherein one motor is closer to the forward end and the other motor is closer to the rearward end.

11. The apparatus of claim 8, wherein the drive shafts are parallel to each other and perpendicular to a longitudinal centerline of the pump.

12. The apparatus of claim 8, wherein the motors are located on one side of a longitudinal centerline of the pump, and the gear box is located on the opposite side of the longitudinal centerline.

13. The apparatus of claim 8, wherein the pump has a housing, and wherein the gear box is located exterior to the housing.

14. An apparatus for pumping a fluid, comprising:

a reciprocating pump;

a plurality of motors each having a motor shaft, the motor shafts being parallel to each other and perpendicular to a longitudinal centerline of the pump.

a plurality of drive gears, each of the drive gears being connected to one of the motor shafts; and

a driven gear connecting to the pump for driving the pump, each of the drive gears being operably connected to the driven gear for rotating the driven gear, wherein the motors are located on one side of the longitudinal centerline of the pump, and the gears are located on the opposite side of the longitudinal centerline.

* * * * *