(19) Europäisches Patentamt
European Patent Office
Office européen des brevets

(11) Publication number: **0 023 879**
B1

(12) # EUROPEAN PATENT SPECIFICATION

(45) Date of publication of patent specification: **30.01.85**

(51) Int. Cl.[4]: **G 07 C 3/00,** G 06 F 15/46, F 02 C 7/00

(21) Application number: **80630031.5**

(22) Date of filing: **04.08.80**

(54) **Engine module life tracking system.**

(30) Priority: **06.08.79 US 64226**

(43) Date of publication of application:
11.02.81 Bulletin 81/06

(45) Publication of the grant of the patent:
30.01.85 Bulletin 85/05

(84) Designated Contracting States:
DE FR GB IT

(56) References cited:
GB-A-2 018 481
US-A-3 344 408
US-A-3 593 012
US-A-4 035 772
US-A-4 135 246

(73) Proprietor: **UNITED TECHNOLOGIES CORPORATION**
United Technologies Building 1, Financial Plaza
Hartford, CT 06101 (US)

(72) Inventor: **Newman, Martin Anthony**
11, Wyngate
Simsbury, CT 06070 (US)

(74) Representative: **Waxweiler, Jean et al**
OFFICE DENNEMEYER S.à.r.l. 21-25 Allée Scheffer P.O.Box 41
L-2010 Luxembourg (LU)

EP 0 023 879 B1

Note: Within nine months from the publication of the mention of the grant of the European patent, any person may give notice to the European Patent Office of opposition to the European patent granted. Notice of opposition shall be filed in a written reasoned statement. It shall not be deemed to have been filed until the opposition fee has been paid. (Art. 99(1) European patent convention).

Courier Press, Leamington Spa, England.

Description

Technical field

This invention relates to information recording systems, and more particularly to a fully automated tracking system for recording the service life history and configuration of gas turbine engines.

Background art

Modern jet engines, such as the F-100 gas turbine engine, are constructed on a modular basis. In the F-100 engine there are as many as six separate engine modules which in combination make up the entire engine assembly. This allows individual modules to be replaced at periodic service intervals, or when their individual service life is used up, or an unanticipated failure occurs. Each module is identified at manufacture with a data plate, mounted at a convenient location on the module body, which provides module information including an identification (ID) code typically having a mnemonic identifying the type of module and a multi-digit serial number. Each data plate is visible on the module, however, once assembled in the engine data plates of the modules installed within the engine housing are not visible. Even for visible modules the data plates may be inaccessible in the assembled engine. As a result the logistics involved in tracking a given module during its service life, or in maintaining current configuration information on a particular engine involves manual recording of the module data plate information prior to installation. These present tracking schemes rely heavily on the reliability of manual logging on paper forms by maintenance personnel and the manual transcribing via keypunch into an information system. This, however, is subject to user apathy and inaccuracy, resulting in information gaps as to the history of any individual engine module which severely limit the ability to analyze and diagnose engine malfunctions, or in providing accurate information for use in investigative procedures for aircraft malfunctions.

Disclosure of invention

One object of the present invention is to provide a life tracking system (LTS) for automatically identifying and recording in permanent record the configurations of a gas turbine engine by exact module type and serial number. Another object of the present invention is to provide an LTS for automatically monitoring and recording in permanent record the use history of each identified engine module.

According to one aspect of the present invention an LTS includes a life tracking unit (LTU) and a plurality of engine mounted module identifier units, one for each engine module, each providing module identification signal data, on demand, to an electronic signal processor in the LTU which is mounted on or off the engine, the LTU also including a non-volatile read/write memory having addressable locations therein for permanent signal storage and signal conditioning circuitry responsive to each of the module identifier units for providing a microprocessor compatible signal representative of the identification signal data from each to the signal processor, the processor assigning permanent address locations for the identification signal data from each module identifier unit in the non-volatile memory and presenting the signal data to that address for permanent storage. In further accord with this aspect of the invention the LTU includes a real time clock and is responsive to signal information representative of the actual values of selected engine performance parameters presented thereto for providing a permanent recording of the operative time intervals of a selected one or more of the engine modules at specified magnitudes of the selected parameters, the processor recording the operative time intervals as counts, or increments of module service life, in the non-volatile memory at the address location identified with the particular module.

According to another aspect of the present invention, an engine module identifier unit provides the identification signal data in the form of optical signals encoded by a data plate optical mask sealed between the mating major surfaces of a base portion and cover portion of the identifier unit enclosure, the base and cover portions each including a plurality of fiber optic waveguides terminated at one end at the major mating surface thereof in an identical matrix array of rows and columns, the waveguides being terminated at another end at the LTU, the two portions being adapted to provide registration of each matrix array on either side of the optical mask sealed therebetween in the assembled enclosure, the data plate optical mask having perforations therethrough at selected locations among the rows and columns of the matrix for providing optical paths through the identifier unit, whereby the location of the optical paths provide the encoded optical signal representative of a particular module identification.

According to still another aspect of the present invention an engine module identifier provides the identification signal data in the form of electrical signals, one associated with each column of a matrix of rows and columns definitive of an alphanumeric code displayed along a first one of two major surfaces of a data plate sealed between the mating major surfaces of a base portion and a cover portion of the identifier unit enclosure, the amplitude of each individual signal defining the particular information, whether alpha or numeric, which is encoded on the data plate and which in combination define the engine module mnemonic identifier and the serial number.

The LTS of the present invention provides a

LIBERTY EXHIBIT 1029, Page 2
Liberty Energy, Inc. and Liberty Oilfield Services LLC v. U.S. Well Services, LLC, IPR2024-01274

permanent history recording of the identification by type and serial number and total usage in one or more selected indicators, such as overall operating time, total operating time under high stress conditions, mode operating profiles, or a weighted operating time reflecting parameters of each module of a gas turbine engine. The preserved information is available for readout to a ground based information system at routine intervals which maintains at a fixed location the compiled history of each module. This eliminates the necessity of manual information logging and its inherent inaccuracies. Similarly the engine module identifier units used in the LTS provide instantaneous engine configuration identification which is presently impossible in a fully assembled gas turbine engine.

These and other objects, features and advantages of the present invention will become more apparent in the light of the following detailed description of preferred embodiments thereof, as illustrated in the accompanying drawing.

Brief description of the drawing

Fig. 1 is a simplified block diagram illustration of an LTS according to the present invention;

Fig. 2 is an exploded view, taken in perspective, of an engine module identifier unit as may be used in the LTS of Fig. 1;

Fig. 3 is a simplified schematic illustration of a circuit element used in the LTS of Fig. 1 in conjunction with the module identifier unit of Fig. 2;

Fig. 4 is a simplified schematic illustration of another element used in the embodiment of Fig. 1 in conjunction with the module identifier unit of Fig. 2;

Fig. 5 is a simplified logic flowchart diagram illustrating the steps of one of the engine module identification routines performed by the LTS of Fig. 1;

Fig. 6 is an exploded view, taken in perspective, of another engine module identifier unit as may be used in the LTS of Fig. 1;

Fig. 7 is an elevation view of one element of the module identifier unit of Fig. 6;

Fig. 8 is a simplified schematic illustration used in the description of the module identifier unit of Fig. 6;

Fig. 9 is an illustration of an engine performance parameter relationship as may be used in the LTS of Fig. 1;

Fig. 10 is an illustration of another engine performance parameter relationship as may be used in the embodiment of Fig. 1;

Fig. 11 is a simplified logic flowchart diagram illustrating the steps incorporated in the recording function as may be used in the LTS of Fig. 1; and

Fig. 12 is a simplified logic flowchart diagram illustrating the steps of another recording function as may be used in the LTS of Fig. 1.

Best mode for carrying out the invention

Referring to Fig. 1, in an illustrative embodiment of the LTS of the present invention for use with an F-100 gas turbine engine, the engine 18 has six identified engine modules which include: an inlet fan module (FM) 20, a core engine module (CM) 21, a high turbine module (HT) 22, a fan drive module (TM) 23, an augmentor and nozzle module (AM) 24, and a gearbox module (GM) 25. The LTS comprises a life tracking unit (LTU) 28 which may be mounted on or off the engine and which in Fig. 1 is illustrated as off-engine mounted, and a plurality of engine module identifier units 30—35 disposed on associated ones of the engine modules 20—25. The module identifier units 32, 33 for the HT and TM modules are mounted internally of the engine structure such that they are completely inaccessible in the assembled engine configuration. For the F-100 gas turbine engine the interconnections between engine mounted equipment (module identifiers, engine parameter sensors etc.) and off-engine mounted equipment are made through a "J" box connector 38 disposed on the FM module.

The interconnections between the LTU and the engine are provided through the lines 40, which include: receiving lines 42, 44 for receiving identification signal information from the module identifier units and from engine mounted sensors which provide actual values for selected engine performance parameters, as described hereinafter, and transmitting lines 46 for transmitting command signal information from the LTU to the identifier units. Inside the LTU the signal lines from each of the module identifier units 30—35, as illustrated partially by the lines 42a—42c, are presented to receiver networks 50—52. Typically each module identifier is connected to an individual receiver such that receivers 50—52 illustrate only a portion of the total required. The configuration of, and the function of, the receivers are dependent on the type of engine module identifier unit used in the LTS, as described in detail hereinafter.

The outputs from the receivers are presented through lines 54—56 to the input/output (I/O) stage of a signal processor 58 of a type known in the art, such as the 8084 microprocessor manufactured by INTEL. The LTU processor could be the same one used in the aircraft electronic engine control (EEC) system, if such is available to provide the signal processing for the LTU on a time shared basis. In addition to the identification signal data the processor also receives at the I/O: the sensed parameter signals on the lines 44, the output from a real time clock 60 on the lines 62, and the output from a read/write memory 64 on the lines 66. The memory 64 is non-volatile and may comprise one or more electrically alterable read only memories (EAROMs) of a type known in the art. The size or number of EAROMs is determined by the permanent storage requirements.

LIBERTY EXHIBIT 1029, Page 3
Liberty Energy, Inc. and Liberty Oilfield Services LLC v. U.S. Well Services, LLC, IPR2024-01274

It may be preferred to provide storage for successive replacement modules of the same type for each engine thereby allowing for a permanent history record for the aircraft service life which extends well beyond that of the particular engine configuration.

The processor transmits signal information to each of the module identifier units through transmitter networks associated with each module, as partially illustrated by the networks 68—70 connected to the processor I/O through lines 71—73. The transmitter networks are also connected to a voltage source 74 in the LTU. As with the receivers the transmitter function is determined by the tape of module identifier unit selected for the system. As described hereinafter the recorded life history and engine configuration information is presented from the processor to the memory 64 on lines 76, and is also made available for readout to an outside unit, such as a ground based data readout unit (shown in phantom) on output lines 78.

Two types of engine module identifier units may be used in the LTS as deemed suitable in view of the engine performance specifications regarding temperature, vibration, and electromagnetic interference (EMI). A first type is an optical encoder using fiber-optic waveguides. Referring to Fig. 2, in an exploded, perspective view of an optical engine module identifier unit 80, an optical mask 82 is mounted in an enclosure comprising a base portion 84 with a mating major surface 85 and cover portion 86 with a major mating surface 87. The base portion 84 is disposed directly on the surface 88 of the engine module at a location selected by the manufacturer, and the upper portion 86 and mask 82 are secured to the base through the use of a suitable mechanical mounting, such as a rivet 89 at each of four corners of the enclosure.

The mask 82 is typically a metal plate having two major surfaces, top and bottom. One surface of the mask includes an encoder portion 90, and a tab portion 92 which is visible in the assembled enclosure. The encoder portion includes a matrix of preformed "knock outs" 94 arranged in N number of rows and M number of columns, the actual numbers depending upon the alphanumeric identification (ID) code required for the module. For a mnemonic plus four-digit serial number ID the mask 82 has five columns. One column (X1) for the mnemonic and four columns (X2—X5) for the four-digit serial number. Each column includes four rows (Y1—Y4) corresponding to a four-bit binary code with each row stamped with its decimal equivalent. This facilitates easy serial number encoding at the time of module manufacture by making perforations 96 at the appropriate rows in each serial number column (X2—X4). The six module mnemonics are similarly stamped adjacent the first column (X1) with single perforations required for CM, FM, GM and AM, and two perforations required to encode the remaining TM, HT. The ID information encoded on the portion 90 is also scribed, or stamped on the tab 92 to permit visual readout when the identifier unit is assembled.

The base and cover portions each enclose a plurality of fiber-optic waveguides 100—104 and 105—108 respectively, which terminate at the major surfaces 85, 87 in a matrix of rows and columns identical to that of the mask 82. Each set of waveguides are terminated at the other end in the LTU. The waveguides exit from each of the portions 84, 86 and are routed through the "J" box (38, Fig. 1) of the engine to the LTU on the lines 42 and 46. The fiber-optic waveguides may be provided either as flexible strips, or ribbons, capable of lying flat along the engine surfaces, or as in current practice in a circular bundle which may be encased in a protective metal jacket. The waveguide material may be either a glass of the lead boro-silicate type for use on modules where the engine temperatures are less than 600°F (316.1°C), or alternatively for those engine locations where the ambient temperature may reach 1,000°F (537.78°C), a fused silica glass may be used.

When fully assembled the matrices of each portion are in registration with that of the mask, such that each perforation of the mask matrix provides a completed optical light path between the two portions. With selective perforations of the mask, the appropriate mask identification information is encoded in a plurality of optical signals (one for each column). Each of the waveguides 100—104 are terminated at each of the four rows (Y1—Y4) in an associated one of the columns (X1—X5). The waveguides 105—108 are each terminated at each of the five columns in an associated one of the four rows (Y1—Y4). Either set of waveguides may function as the light transmitting lines to provide the light energy to the module identifier unit while the second set provides the completed optical path to the LTU.

For the optical module identifier unit 80 the LTU transmitter networks (68—70 Fig. 1) include light transmitting devices for providing the optical energy to the module identifier units. One transmitter may be used to provide excitation to all of the units, each unit may have its own transmitter. In Fig. 3, one embodiment for the transmitter network 68, which may be suitable for use with the optical identifier unit 80 (Fig. 2) includes a plurality of light sources such as light emitting diodes (LEDs) 110—114, one each for each of the light transmitting waveguides, such as the waveguides 100—104 enclosed in the lines 48a. Each LED is individually excited through an associated one of the voltage control switches 115—119 each connected to the voltage source 74. The switches are gated on by applied gate signals presented from the processor on lines 120—124 enclosed in the lines 71 (Fig. 1). The LEDs are typically energized in sequence to provide the light energy to one column at a time, each

LIBERTY EXHIBIT 1029, Page 4
Liberty Energy, Inc. and Liberty Oilfield Services LLC v. U.S. Well Services, LLC, IPR2024-01274

for a time interval sufficient to permit reading of the four row waveguides (105—108, Fig. 2) monitored by the receivers (50—52, Fig. 1). Referring now to Fig. 4, one embodiment for a receiver (50, Fig. 1) suitable for use with the optical identifier unit includes photodetectors 127—130 which detect a completed optical path on the associated one of the matrix row waveguides (105—108, Fig. 2) presented in the lines 42 (Fig. 1) to the receiver. The voltage output signals from each photodetector representative of a present optical signal in the associated waveguide are presented to signal conditioners 131—134 which provide a processor compatible signal representative of the received optical signal. The conditioned signals are presented through lines 135—138 within the lines 54 to the signal processor 58. It should be understood that the transmitter and receiver embodiments of Figs. 3, 4 are illustrative of one type of configuration which may be suitable for use. Any other one of a number of networks using light sources and light detectors, whether individual sources or in a multiplexing manner, may be used as deemed appropriate.

In operation, the LTU identifies each engine module by interrogating the associated module identifier unit through execution of a module identification routine as shown in Fig. 5. The processor enters the routine at 140, and instructions 142 request execution of the module identifying routine. Instructions 144 command processor selection of a first module by its address and instructions 146 request identification of the module column, or transmit lines (100—104, Fig. 2). The module row, or receive lines are next identified in instructions 148. The identification of the transmit and receive lines represent the particular I/O locations of the processor associated with those lines. Instructions 150 next command execution of the subroutine to interrogate the selected module to determine the optical code programmed on the mask 82 (Fig. 2). Instructions 152 request excitation of one of the transmit lines, such as line 100, and the recording of its identity (X1) in the processor random access memory (RAM). Instructions 153 next request the scanning of each of the receive lines (105—108) in sequence to detect the presence or absence of a signal bit on the particular line, and the recording of this data together with the identity of the associated row (Y1—Y4) in RAM, this information being recorded at the location of the particular column ID in RAM. To illustrate with reference to Fig. 2, light energy on the line 100 with the FM mnemonic punched out results in a data bit in column X1, row Y2, and the examination of rows Y1—Y4 results in a binary 0010 for the column X1. Instructions 154 next determine whether the excited line is the final one and if not instructions 155 command the processor to increment to the next numbered transmit line (X2) and reexecute the subroutine. In this manner each of the transmit lines are excited and each of the rows are monitored for the presence of signal bits. The information encoded by the optical mask 82 is recreated in RAM and read out to the non-volatile memory 64 for permanent storage. Following a YES answer to instructions 154 instruction 156 determine if this is the last module, and if not instructions 157 request that the processor increment to the next identified module. Following interrogation of each module the processor exits the flowchart at 158.

Another type of engine module identifier unit which may be used with the present system is an electronic type which encodes the data plate identification information by changing the conductivity of an electrical current path through the individual columns of the data plate matrix. Referring to Fig. 7 a data plate 140 for use with an electronic module identifier unit includes an encoding portion 142 and a tab portion 144, in the same manner as the optical mask 22 (Fig. 2). In the illustrative embodiment the encoder portion includes a two-letter mnemonic code in a column 146 and a four-digit serial number code in columns 147—150. Each of the digit column are arrayed in a pure decimal configuration and selection of a 0—9 digit is accompanied by the preparation of the data plate at the appropriate "knock out" 146. Similarly the mnemonics are printed along the column 146 each adjacent a preformed knock out. As in the optical identifier the encoder portion 142 visually displays the information via the completed perforation process performed at the time of manufacture, and the tab is inscribed with the module ID in alphanumeric fashion.

Typically the columns 146—150 are each resistive ladder configurations of thick film resistors deposited on the plate, which is a printed circuit board. As illustrated in Fig. 8 for the column 150 ten resistors 154—163 are arrayed in parallel in the ladder configuration 164. Connection between the LTU and the module identifier unit is through a cable 166 which includes: an excitation line 168 and a signal readout line 169, each common to all of the columns, and lines 170—174 providing the low signal side ground return for each column. The electrical connection to the cable 166 is provided through a connector 176. The line 168 presents an excitation signal V_{EXC} from the LTU through a reference resistor 178 (R_{ref}) to one leg of each of the ladders. The line 169 monitors the sensed output voltage signal E_0 from each ladder, each signal having an amplitude inversely proportional to the particular ladder resistance (R_L). Isolation between the resistive ladder of each column is provided by completing the ground path through the associated one of the return lines 170—174, sequentially, one at a time, and measuring the product of the ratiometric value of the ladder

LIBERTY EXHIBIT 1029, Page 5
Liberty Energy, Inc. and Liberty Oilfield Services LLC v. U.S. Well Services, LLC, IPR2024-01274

resistance and the reference resistor multiplied by V_{EXC}.

In operation, the total resistance of the ladder is the parallel equivalent resistance of all the resistors, or:

$$R_L = \frac{1}{\Sigma \frac{1}{R_{154-163}}}$$

Encoding the digit "9" in the column 150 requires a perforation 177 resulting in a total resistance value equal to that of the resistor R_{163}, and the signal magnitude

$$E_0 = V_{EXC} \frac{R163}{R_{163} + R_{REF.}}$$

The reference resistor 178 is also a thick film resistor of the same type as those of the ladder and is deposited directly on the data plate PC board. The reference resistor experiences the same temperature environment as those of the ladder such that the output signal magnitude being the ratiometric value of the ladder and reference resistor values is substantially free from temperature error effects.

Referring now to Fig. 6, in an exploded, perspective view of an electronic module identifier unit 179 the data plate 140 is enclosed in a manner similar to that of the identifier unit 80 (Fig. 2). A base portion 180 is disposed directly on the engine module surface 181, and includes a connector 176 with individual contacts 182 arranged along one edge of the mating major surface 183. The data plate includes a mating array of contacts 182a which make electrical contact with the contacts 182 in the assembled enclosure. As with the unit 80 a cover portion 184 is included, which is bolted, or riveted to the base portion 180 to provide a sandwich enclosure of the plate 140. The tap portion 144 of the plate extends beyond the mechanical sandwich configuration to provide a readily visible alphanumeric ID of the module.

Referring again to Fig. 1, the LTU life history recording of each module may include: total actual "on time" hours, the actual time in which a module is operating within a particularly high stress condition, or a weighted accumulated time. The recording of the total "on time" hour is provided through a simple routine executed by the signal processor which monitors the lapsed time for each using the real time clock 60. The information recorded for each module is accumulated in the non-volatile memory 64, each module being assigned a portion of the memory which acts as a life register for storing the recorded life history of the module. The memory requirement is dependent on the number of engines (and therefore total number of modules) and is generally selected to allow for more than one module of a given type for each engine, such that the information stored may represent the succession of a number of engine configurations. The information stored in the non-volatile memory is always available for readout to the ground based unit upon request to the processor 58. The memory itself is not directly accessible to the ground based unit to ensure the integrity of the stored information.

In recording the actual operating time of a particular module under specified conditions, the engine performance parameters which define the existance of such a condition must be known and measured. The specified conditions relate to known higher stress conditions detrimental to module service life and are generally based on the peculiar operating mode problems of a particular type engine module, as may be prescribed by the engine manufacturer. An example of a known critical operating mode for the inlet fan module 21 is that a fan speed (N_1) operation within a defined speed band related to a higher fan blade fatigue. This is referred to as the fan speed "flutter region" which is a low cycle speed band, close to the starting speed. It is desirable to record the actual operating time of the fan module within this critical speed band, in addition to recording the other use parameters such as total hours of general operational time, since the low cycle operation represents an accelerated use rate in terms of mean time between failure for the module. A similar critical parameter for the fan drive turbine module (TM) is fan turbine inlet temperature (FTIT). The problems of degree of "metal creep" of the fan turbine blades as a function of FTIT temperature is an exponential relationship resulting in a significant shortening of the permitted time intervals between maintenance when the fan turbine is required to operate at accelerated FTIT values.

Fig. 9 illustrates generally the exponential relationship between FTIT and the fan turbine unit life count in hours. The life count may be any interval of time, typically in hours, which is assigned for the particular module. The value of FTIT below a nominal value 188 results in a single count increment, whereas higher FTIT temperature operation results in a multiple count value determined from the exponential curve 186. (Turbine module life is typically a time function weighted by FTIT, such that the count rate increases dramatically at higher temperature values). For the fan module the low cycle fatigue is of particular interest in addition to the total "on time". Fig. 10 illustrates a single unit life count (C_{FM}) for all values of N_1 outside of the low cycle speed band defined as $N_{1X} \times \leq N_1 \leq N_{1Y}$. The count increases by a factor (k), as determined from the engine reliability information, for operation within this band.

The recording of fan module accelerated use as a function of fan speed is provided through a simple routine executed by the processor as illustrated by the flowchart of Fig. 11. The

LIBERTY EXHIBIT 1029, Page 6
Liberty Energy, Inc. and Liberty Oilfield Services LLC v. U.S. Well Services, LLC, IPR2024-01274

processor enters the program at 190 and for a multiple engine LTS instructions 192 command the execution of the fan module recording routine for each engine (E) up to an E=Q number. Instructions 194 request the first engine address in RAM, and instructions 196 request a readout of the most recently sampled N_1 value stored in RAM. Instructions 198 next request comparison of the actual N_1 value with the lower (N_{1X} and upper (N_{1Y}) limits of the low cycle speed band. If the actual fan speed is not within this band instructions 200 request a determination of whether this is the last engine, and if YES the processor exits the flowchart at 202. If this is not the last engine instructions 204 request the processor to increment to the next engine, thereby starting the routine again. If the actual speed is within the defined low cycle band instructions 206 request the identification of the fan module by its serial number ID, and the address location for the particular FM in permanent memory. Instructions 208 request the addition of an added count (kC_{FM}) to the total count accumulated for the particular FM. Instructions 210 next request the processor to store the newly accumulated total in the FM life register at its permanent memory address, after which instructions 212 determine if this is engine E=Q, and if NO then instructions 214 command the processor to increment to the next engine. If the answer to instructions 212 is YES the processor exits the flowchart at 202.

Fig. 12 illustrates the flowchart for use with the history recording of turbine module (TM) use. Here the processor enters at 216 and instructions 218 command the execution of the listed routine for each engine. Instructions 220 start the routine with a command to select the first engine address, after which instructions 222 command readout of the most recently sampled actual FTIT value stored in RAM. Instructions 224 request the readout of the appropriate C_{TM} value for the stored actual FTIT value from a look up table in RAM which defines the exponential schedule of Fig. 9. Following determination of the appropriate count value, instructions 226 request the ID of the particular TM and its permanent memory address. Instructions 228 command the processor to increment the present total accumulated TM count by the most recent C_{TM} value and instructions 230 request the processor to store the newly accumulated total in the particular TM life register. Instruction 232 request a determination of whether this is the last engine. If the answer is NO, instructions 234 command the processor to increment to the next engine address and if the answer is YES the processor exits at 236.

The routines illustrated by the flowcharts of Fig. 11, 12 may be modified to also include the total hour use time. Similarly the flowcharts may be modified, as deemed necessary, to accommodate any particular recording system or any additional recording requirements for either module, all through programming techniques known to those skilled in the programming art.

The LTS of the present invention records the use and life history of each engine module in a non-volatile memory which is accessible for readout into a ground based system upon request. Manual recording of engine configurations is eliminated through the use of the module identifier units, either electro-optical or electronic, which provide the engine module data plate information on request of the LTU processor. In addition each identifier unit provides for visual readout of the data plate information. The LTU functions may be performed in whole, or in part, by the on board processor used in the electronic engine control, if available. Otherwise a dedicated microprocessor of a type known in the art may be used.

Claims

1. A life tracking system (LTS) for automatically identifying the modular configuration of a gas turbine engine (18), as characterized by:

plurality of engine module identifier units (30—35), one associated with each of the gas turbine engine modules (20—25), each providing identification signal data of the associated module type and serial number in response to interrogation signals presented thereto; and

a life tracking unit (LTU) (28), including electronic signal processing means (58), and further including receiving means (50—52) and transmitting means (68—70) connected to said module identifier units and to said signal processing means, said processing means including internal memory means for storing signals, said transmitting means providing interrogation signals to each module identifier unit in response to command signals from said processing means and said receiving means responding to said identification signal data from each module identifier unit for providing a digital signal manifestation thereof to said processing means, said processing means storing in said internal memory means each digital signal manifestation received in response to an associated command signal.

2. The system of claim 1, wherein said LTU (28) further includes:

nonvolatile memory means (64) having groups of addressable signal locations, each group providing nonvolatile signal storage of digital signal manifestations addressed thereto; and wherein

said processing means (58) addresses said digital signal manifestations from each

LIBERTY EXHIBIT 1029, Page 7
Liberty Energy, Inc. and Liberty Oilfield Services LLC v. U.S. Well Services, LLC, IPR2024-01274

module identifier to the one of said groups of addressable signal locations of said nonvolatile memory means selected for storage of identification signal data from that particular module identifier unit.

3. The system of claim 2, wherein said processing means further includes clock means (60) for providing a real time of day signal, said processing means providing each command signal to said transmitting means at a related time of day signal value, said processing means further addressing the time of day signal value related to each command signal to each of said groups of addressable signal locations of said nonvolatile memory for storage therein with the identification signal data provided from each module identifier unit in response to said command signal.

4. The system of claim 3, further including:

engine sensor means for providing actual value signals of selected engine module operating parameters; and wherein

said processing means further addresses said actual value signals from each of said sensor means to the one of said groups of addressable signal locations of said nonvolatile memory means selected for storage of identification signal data from the module identifier unit associated with the selected engine module.

5. The system of claim 1 wherein each engine module identifier unit (80) includes:

a data plate optical mask (82) having parallel major surfaces defining an optical encoder portion (90) including a matrix of rows and columns defining at their intersections an array of signal encoder locations (94), at least one of said major surfaces having identification characteristics disposed thereon in association with each row and column whereby each encoder location defines a unique identification signal character which may be encoded in the mask by perforation of the location to form an aperture (96) between said major surfaces, each aperture providing an optical path for optical encoding of the selected identification signal characters relating to module type and serial number;

an enclosure assembly having a base portion (84) and a cover portion (86), each having a mating major surface (85, 87) and each having a plurality of fiber-optic waveguides (100—108) disposed therethrough, one end of said waveguides in each portion being terminated at said mating major surface in a matrix array of row and column intersections corresponding to said matrix of signal encoder locations and the other end of said waveguides being terminated at said LTU (28), said cover portion and base portion being adapted to enclose said data plate therebetween in semi-permanent engagement (89) and with registration of said waveguide matrices with said encoder matrix to provide a complete optical path for each encoded identification signal character; and wherein

said transmitting means (68—70) provides optical interrogation signals to said waveguides of one enclosure assembly portion and said receiving means 50—52 receives the optical encoded identification signal data from said waveguides of the other one of said portions.

6. The system of claim 1 wherein each of said engine module identifier units (179) include:

data plate assembly means (140) having one or more impedance networks (146—150) disposed in columns on a major surface thereof, each column being associated with a particular identification signal character and each including parallel impedance paths (154—163) between an input bus (168) and an output bus (170—174) thereof for providing, in summation, a fundamental impedance value, said impedance networks being adapted for providing an encoded impedance value different from said fundamental impedance by interruption of the electrical continuity of said buses at one or more predisposed locations (152) between said parallel impedance paths, said predisposed locations being arranged in rows in each column, each associated with one of a plurality of identification signal character values printed on said major surface, whereby each of said encoded impedance values correspond to a particular identification character value, the identification signal characters from each column and the character values from each row comprising, in combination, the identification signal data for the associated engine module, said data plate assembly further including a plurality of electrical contacts (176) connected to each network input bus and output bus, and a signal source contact with a reference impedance (178) value in series therewith; and enclosure assembly means, including a base portion (180) and a cover portion (184), each having a mating major surface (183), said base portion including a plurality of electrical contacts (182) adapted to engage said data plate electrical contacts and connected (168—174), to the LTU, said cover portion and base portion being adapted to enclose said data plate therebetween in semi-permanent engagement with electrical contact of said mask and base portion electrical contacts; and wherein

said transmitting means (68—70) provides said interrogation signals between said signal

LIBERTY EXHIBIT 1029, Page 8
Liberty Energy, Inc. and Liberty Oilfield Services LLC v. U.S. Well Services, LLC, IPR2024-01274

source contact and each of said output bus contact of said identifier unit, and said receiving means (50—52) receives said identification signal characters as a signal magnitude proportional to the ratio of the encoded impedance value to said reference impedance value.

7. An engine module identifier unit (80) for providing identification signal data of an engine module type and serial number to a life tracking unit (LTU) (28) in response to interrogation signals presented by the LTU, as characterized by:

a data plate optical mask (82) having parallel major surfaces defining an optical encoder portion (90) including a matrix of rows and columns defining at their intersections an array of signal encoder locations 94, at least one of said major surfaces having identification characters disposed thereon in association with each row and column whereby each encoder location defines a unique identification signal character which may be encoded on the mask by perforation of the location to form an aperture (96) between said major surfaces, each aperture providing an optical path for optical encoding of the selected identification signal characters relating to module type and serial number;

an enclosure assembly having a base portion (84) and a cover portion (86), each having a mating major surface (85, 87) and each having a plurality of fiber-optic waveguides (100—108) disposed therethrough, one end of said waveguides in each portion being terminated at said mating major surface in a matrix array of row and column intersections corresponding to said matrix of signal encoder locations, and the other end of said waveguides being terminated at said LTU (28), said cover portion and base portion being adapted to enclose said data plate therebetween in semi-permanent engagement (89) and with registration of said waveguide matrices with said encoder matrix to provide a complete optical path for each encoded identification signal character, said module identifier unit receiving optical interrogation signals through said waveguides of one enclosure assembly portion and providing optical encoded identification signal data through said waveguide associated with the other one of said portions.

8. An engine module identifier unit (179) for providing identification signal data of an engine module type and serial number to a life tracking unit (LTU) (28) in response to interrogation signals presented by the LTU, as characterized by:

data plate assembly means (140) having one or more impedance networks (146—150) disposed in columns on a major surface thereof, each column being associated with a particular identification signal character and each including parallel impedance paths (154—163) between an input bus (169) and an output bus (170—174) thereof for providing, in summation, a fundamental impedance value, said impedance networks being adapted for providing an encoded impedance value different from said fundamental impedance by interruption of the electrical continuity of said buses at one or more predisposed locations (152) between said parallel impedance paths, said predisposed locations being arranged in rows in each column, each associated with one of a plurality of identification signal character values printed on said major surface, whereby each of said encoded impedance values correspond to a particular identification character value, the identification signal characters from each column and the character values from each row providing, in combination, the identification signal data for the associated engine module, said data plate assembly further including a plurality of electrical contacts (176) connected to each network intput bus and output bus, and a signal source contact with a reference impedance (178) value in series therewith; and

enclosure assembly means, including a base portion (180) and a cover portion (184), each having a mating major surface (183), said base portion including a plurality of electrical contacts (182) adapted to engage said data plate electrical contacts and connected (168—174) to the LTU, said cover portion and base portion being adapted to enclose said data plate therebetween in semi-permanent engagement (185) with electrical contact of said mask and base portion electrical contacts, said modular identifier unit responding to interrogation signals presented to said signal source contact and each of said output bus contacts to provide each network signal identification character as a signal magnitude proportional to the ratio of the encoded impedance value to said reference impedance value.

Patentansprüche

1. Überwachungssystem für die automatische Identifizierung des modularen Aufbaus eines Gasturbinentriebwerkes (18), gekennzeichnet durch mehrere Triebwerkmodulidentifikationseinheiten (30—34), wovon je eine einem der Gasturbinentriebwerkmodule (20—25) zugeordnet ist und jede Indentifikationssignaldaten der zugeordneten Modultype und Seriennummer als Antwort auf ihr zugeführte Abfragesignale erzeugt, und durch eine Überwachungseinheit (28), mit elektronischen Signalverarbeitungseinrichtungen

LIBERTY EXHIBIT 1029, Page 9
Liberty Energy, Inc. and Liberty Oilfield Services LLC v. U.S. Well Services, LLC, IPR2024-01274

(58), und mit Empfangseinrichtungen (50—52) und Übertragungseinrichtungen (68—70), welche an die Modulidentifikationseinheiten und an die Signalverarbeitungseinrichtungen angeschlossen sind, wobei die Signalverarbeitungseinrichtungen eine interne Speichereinrichtung zum Speichern von Signalen umfassen, die Übertragungseinrichtungen Abfragesignale jeder Modulidentifikationseinheit in Abhängigkeit von Kommandosignalen der Signalverarbeitungseinrichtungen bereitstellen und die Empfangseinrichtungen auf die Identifikationssignaldaten jeder Modulidentifikationseinheit ansprechen, um eine Digitalsignalaussage derselben den Signalverarbeitungseinrichtungen bereitzustellen, die Signalverarbeitungseinrichtungen in der internen Speichereinrichtung jede Digitalsignalaussage speichern, welche als Antwort auf ein zugeordnetes Kommandosignal erhalten worden ist.

2. System nach Anspruch 1, bei dem die Überwachungseinheit (28) ferner eine Permanentspeichereinrichtung (74) umfasst, die Gruppen von adressierbaren Signalspeicherstellen hat, wobei jede Gruppe eine permanente Signalspeicherung von ihr adressierten digitalen Signalaussagen ermöglicht und in dem die Signalverarbeitungseinrichtungen (58) die Digitalsignalaussagen von jeder Modulidentifikationseinheit an einen der Gruppe von adressierbaren Signalspeicherstellen der Permanentspeichereinrichtung adressiert, welche für die Speicherung der Identifikationssignaldaten von der bestimmten Modulidentifikationseinheit ausgewählt worden ist.

3. System nach Anspruch 2, in welchem die Signalverarbeitungseinrichtungen desweitern einen Zeitgeber (60) umfassen, um ein Isttageszeitsignal bereitzustellen, die Signalverarbeitungseinrichtungen jedes Kommandosignal zu den Übertragungseinrichtungen zu einem zugeordneten Tageszeitsignalwert bereitstellen, die Signalverabeitungseinrichtungen desweitern den Tageszeitsignalwert, welcher jedem Kommandosignal zugeordnet ist, jeder der Gruppen von adressierbaren Signalspeicherstellen der Permanentspeichereinrichtung zur dortigen Speicherung adressieren mit den Identifikationssignaldaten welch von jeder Modulidentifikationseinheit als Antwort auf das Kommandosignal bereitgestellt werden.

4. System nach Anspruch 3, welches ferner Triebwerksmesseinrichtungen umfasst, um Istwertsignale von ausgewählten Triebwerksmodulbetriebsparametern bereitzustellen und in welchem die Signalverarbeitungseinrichtungen desweitern die Istwertssignale von jeder der Triebwerksmesseinrichtungen einer der Gruppen von adressierbaren Signalspeicherstellen der Permanetnspeichereinrichtung, welche für die Speicherung von Identifikationssignaldaten von der dem ausgewählten Triebwerksmodul zugeordneten Modulidentifikationseinheit ausgewählt wurde, adressiert.

5. System nach Anspruch 1, in welchem jede Triebwerksmodulidentifikationseinheit (80) folgende Teile umfasst: eine optische Datenplattenmaske (82) mit parallenen Hauptflächen, welche einen optischen Kodierteil (90) begrenzen, welcher eine Matrix von Reihen und Spalten umfasst, welche an ihren Schnittstellen eine Anordnung von Signalkodierstellen (90) definieren, wobei wenigstens eine der Hauptfläche Identifikationszeichen hat, welche darauf in Verbindung mit jeder Reihe und Spalte angeordnet sind, wodurch jede Kodierstelle ein einziges Identifikationssignalzeichen bezeichnet, welches in die Maske durch Perforieren der Stelle zur Bildung eines Loches (96) zwischen den Hauptflächen kodiert werden kann, wobei jedes Loch einen optischen Weg für die optische Kodierung des ausgewählten Identifikationssignalzeichens, welches der Modultype und Seriennummer zugeordnet ist, bereitstellt, ein Gehäseaggregat mit einem Bodenteil (84) und einem Deckelteil (86), welche jeweils gegenseitig zusammenpassende Hauptflächen (85, 87) haben und jeder Teil eine Veilzahl von durchlaufenden Lichtleitfasern (100—108) besitzt, wobei ein Ende der Lichtleitfasen in jedem Teil an der Hauptfläche in einer Matrixanordnung von sich schneidenden Reihen und Spalten endet, welche der Matrix der Signalkodierstellen entspricht und das andere Ende der Lichtleitfasern an der Überwachungseinheit (28) endet, wobei die Deckel- und Bodentiele ausgelegt sind, um die dazwischen gelegte Datenplatte halbpermanent und mit lagegenauer Ausrichtung der Lichtleitermatrizen mit der Kodiermatrix festzuhalten, um einen vollständigen optischen Weg für jedes Identifikationssignalzeichen bereitzustellen und in dem die Übertragungseinrichtungen (68—70) den Lichtleitern eines Gehäuseaggregatenteiels optische Abfragesignale bereitstellen und die Empfangseinrichtungen (50—52) die optischen kodierten Identifikationssignaldaten von den Lichtleitern des anderen der Teile erhält.

6. System nach Anspruch 1, in dem jede der Triebwerksmodulidentifikationseinheiten (169) folgende Teile umfasst: ein Datenplattenaggregat (140) mit einem oder mehreren Impedanznetzwerken (146—150), welche in Spalten auf einer seiner Hauptflächen angeordnet sind, wobei jede Spalte einem besonderen Identifikationssignalzeichen zugeordnet ist und jede parallel Impedanzwege (154—163) einer Eingangssammelschiene (168) und einer Ausgangssammelschiene (170—174) davon umfasst, um durch Summierung einen Grundimpedanzwert bereitzustellen, wobei die Impedanznetzwerke ausgelegt sind, um einen von der Grundimpedanz verschiedenen kodierten Impedanzwert bei Unterbrechung der elektrischen Kontinuität der Sammelschienen an einer oder mehreren vorgewählten Stellen (152) zwischen den parallelen Impedanzwegen bereitzustellen, wobei die

LIBERTY EXHIBIT 1029, Page 10
Liberty Energy, Inc. and Liberty Oilfield Services LLC v. U.S. Well Services, LLC, IPR2024-01274

vorgewählten Stellen in Reihen in jeder Spalte angeordnet sind und jede mit einem von einer Vielzahl von Identifikationszeichenwerten, welche auf die oben genannte Hauptfläche gedruckt sind, zugeordnet ist, wodurch jede der kodierten Impedanzwerte einem besonderen Identifikationszeichenwert entspricht, wobei die Identifikationszeichen von jeder Spalte und die Zeichenwerte von jeder Spalte in Kombination die Identikationsignaldaten für das zugeordnete Triebwerksmodul enthalten, wobei das Datenplattenaggregat desweitern eine Veilzahl von elektrischen Kontakten (176) umfasst, welche mit jeder Netzwerkeingangssammelschiene und Ausgangssammelschiene verbunden sind, sowi ein Signalquellenkontakt mit einem Bezugsimpedanzwert (178), welche damit in Reihe geschaltet ist und ein Gehäuseaggregat mit einem Bodenteil (180) und einem Deckelteil (184), welche jeweils eine zusammenpassende Hauptfläche (183) haben, wobei der Bodenteil eine Vielzahl von elektrischen Kontakten (182) hat, welche zur Berührung mit den elektrischen Kontakten der Datenplatte ausgelegt sind, und welche mit der Überwachungseinheit (168—170) verbunden sind, wobei der Deckelteil und der Bodenteil ausgelegt sind, um die Datenplatte zwischen sich semipermanent in elektrischem Kontakt der Maske und den elektrischen Kontakten den Bodenteil festzuhalten, und in dem die Übertragungseinrichtungen (68—70) die Abfragesignale zwischen dem Signalquellenkontakt und jedem der Ausgangssammelschienenkontakte der Identifikationseinheit bereitstellen und die Empfangseinrichtungen (50—52) die Identifikationssignalzeichen als eine Signalamplitude proportional zum Verhältnis des kodierten Impedanzwertes zum Bezugsimpedanzwert empfangen.

7. Triebwerkmodulidentifikationseinheit (80) zur Bereitstellung von Identifikationssignaldaten von Triebwerkseinheiten und Seriennummer an eine Überwachungseinheit (28) als Antwort auf Abfragesignale, welche von der Überwachungseinheit geliefert werden, gekennzeichnet durch eine optische Datenplattenmaske (82) mit parallelen Hauptflächen, welche einen optischen Kodierteil (90) begrenzen, welcher eine Matrix von Reihen und Spalten umfasst, welche an ihren Schnittstellen eine Anordnung von Signalkodierstellen (90) definieren, wobei wenigstens eine der Hauptflächen Identifikationszeichen hat, welche darauf in Verbindung mit jeder Reihe und Spalte angeordnet sind, wodurch jede Kodierstelle ein einziges Identifikationssignalzeichen bezeichnet, welches in de Maske durch Perforieren der Stelle zur Bildung eines Loches (96) zwischen den Hauptfläche kodiert werden kann, wobei jedes Loch einen optischen Weg für die optische Kodierung des ausgewählten Identifikationssignalzeichens, welches der Modultype und Seriennummer zugeordnet ist, bereitstellt, ein Gehäuseaggregat mit einem Bodenteil (84) und einem Deckelteil (86), welche jeweils gegenseitig zusammenpassende Hauptflächen (85, 87) haben und jeder Teil eine Veilzahl von durchflaufenden Lichtleitfasern (100—108) besitzt, wobei ein Ende der Litchtleitfasern in jedem Teil an der Hauptfläche in einer Matrixanordnung von sich schneidenden Reihen und Spalten endet, welche der Matrix der Signalkodierstellen entspricht und das andere Ende der Lichtleitfasern an der Überwachungseinheit (28) endet, wobei die Deckel- und Bodenteile ausgelegt sind, um die dazwischen gelegte Datenplatte halbpermanent und mit lagegenauer Ausrichtung der Lichtleitermatrizen mit der Kodiermatrix festzuhaltem, um einen vollständigen optischen Weg für jedes Identifikationssignalzeichen bereitzustellen, wobei die Modulidentifikationseinheit optische Abfragesignale durch die Lichtleiter eines gehäuseaggregatteiles erhält und optische kodierte Identifikationssignaldaten durch den Lichtleiter, welche dem anderen der Gehäuseteile zugeordnet ist, bereitstellt.

8. Triebwekmodulidentifikationseinheit, (179) für die Bereitstellung von Identifikationssignaldaten von Triebwerkseinheiten und Seriennummer an eine Überwachungseinheit (28) als Antwort auf Abfragesignale, welche von der Überwachungseinheit geliefert werden, gekennzeichnet durch ein Datenplattenaggregat (140) mit einem oder mehreren Impedanznetzwerken (146—150), welche in Spalten auf eine seiner Hauptflächen angeordnet sind, wobei jede Spalte einem besonderen Identifikationssignalzeichen zugeordnet ist und jede parallele Impedanzwege (154—163) einer Eingangssammelschiene (168) und einer Ausgangssammelschiene (170—174) dayon umfasst, um durch Summierung einen Grundimpedanzwert bereitstellen, wobei die Impedanznetzwerke ausgelegt sind, um einen von der Grundimpedanz verschiedenen kodierten Impedanzwert bei Unterbrechung der elektrischen Kontinuität der Sammelschiene an einer oder mehreren vorgewählten Stellen (152) zwischen den parallelen Impedanzwegen bereitzustellen, wobei die vorgewählten Stellen in Reihen in jeder Spalte angeordnet sind und jede mit einem von einer Vielzahl von Identifikationszeichenwerten, welche auf die oben genannte Hauptfläche gedruckt sind, zugeordnet ist, wodurch jede der kodierten Impedanzwerte einem besonderen Identifikationszeichenwert entspricht, wobei die Identifikationszeichen von jeder Spalte und die Zeichenwerte von jeder Spalte in Kombination die Identifikationssignaldaten für das zugeordnete Triebwerksmodul enthalten, wobei das Datenplattenaggregat desweitern eine Vielzahl von elektrischen Kontakten (176) umfasst, welche mit jeder Netzwerkeingangssammelschiene und Ausgangssammelschiene verbunden sind, sowie ein Signalquellenkontakt mit einem Bezugsimpedanzwert (178), welche damit in Reihe geschaltet ist, und ein Gehäuse-

LIBERTY EXHIBIT 1029, Page 11
Liberty Energy, Inc. and Liberty Oilfield Services LLC v. U.S. Well Services, LLC, IPR2024-01274

aggregat mit einem Bodenteil (180) und einem Deckelteil (184), welche jeweils eine zusammenpassende Hauptfläche (183) haben, wobei der Bodenteil eine Vielzahl von elektrischen Kontakten (182) hat, welche zur Berührung mit den elektrischen Kontakten der Datenplatte ausgelegt sind, und welche mit der Überwachungseinheit (168—170) verbunden sind, wobei der Deckelteil und der Bodenteil ausgelegt sind, um die Datenplatte zwischen sich semipermanent in elektrischem Kontakt der Maske der elektrischen Kontakten den Bodenteil festzuhalten, wobei die Modulidentifikationseinheit auf Abfragesignale die dem Signalquellenkontakt zugeführt werden, anspricht, um jedes Netzwerksignalidentifikationszeichen als Signalamplitude bereitzustellen, die proportional zum Verhältnis des kodierten Impedanzwertes zum Bezugsimpedanzwert ist.

Revendications

1. Système de surveillance pour identifier de façon automatique la configuration modulaire d'un moteur de turbine à gaz (18), caractérisé par une pluralité d'unités (35—36) d'identification de module de moteur, dont chacune est associée avec un des modules (20—25) du moteur à turbine à gaz, et fournissant chacune un signal de données d'identification du type de module et numéro de série associés en réponse à des signaux d'interrogation y présentés, et une unité de surveillance (28) comprenant des moyens de traitement électronque de signaux (58), et comprenant en outre des moyens de réception (50—52) et des moyens de transmission (68—70) connectés auxdites unités d'identification de module et au dit moyen de traitement de signaux, lesdits moyens de traitement de signaux comprenant un moyen de mémoire interne pour mémoriser des signaux, les moyens de transmission fournissant des signaux d'interrogation à chaque unité d'identification de module en réponse à des signaux de commande, le moyens de traitement de signaux et les moyens de réception répondant audit signal de données d'identification de chaque unité d'identification de module pour fournir un signal de manifestation numérique aux moyens de traitement de signaux, les moyens de traitement de signaux mémorisant dans le moyen de mémorisation interne chaque signal de manifestation numérique reçu en réponse à un signal de commande associé.

2. Système selon la revendication 1, dans lequel l'unité de surveillance (28) comprend une mémoire permanente (64) ayant des groupes de positions adressables pour signaux, chaque groupe fournissant une mémorisation de signal permanente des signaux de manifestion numériques y adressés, et dans lequel le moyen de traitement de signaux (58) adresse des signaux de manifestation numériques de chaque unité d'identification de module à un des groupes de positions adressables pour signaux de la mémoire permanente choisies pour mémoiriser le signal de données d'identification de l'unité d'identification de module particulière.

3. Système selon la revendication 2, dans lequel le moyen de traitement de signaux comprend une horloge (60) pour fournir un signal du temps réel du jour, le moyen de traitement fournissant chaque signal de commande aux moyens de transmission à une valeur associée du signal du temps du jour, le moyen de traitement adressant en outre la valeur associée du signal du temps du jour associée à chacun des groupes de positions addressables pour signaux de la mémoire permanente pour les mémoriser avec les signaux de données d'identification fournies par chacue des unités d'identification de module en réponse audit signal de commande.

4. Système selon la revendication 2, comprenant en outre un moyen capteur pour le moteur pour fournir des signaux de valeur réel de paramètre de fonctionnement choisi de module de moteur et dans lequel le moyen de traitement adresse en outre les signaux de valeur réelle de chacun des moyens capteurs à l'un des groupes de positions adressables pour signaux de la mémoire permanente choisie pour mémoriser les signaux de données d'identification de l'unité d'identification de module associée au module de moteur choisi.

5. Système selon la revendication 1, dans lequel chaque unité d'identification de module (8) comprend un masque optique (82), sous forme de plaque pour des données ayant des surfaces majeures définissant une partie de codage optique (90) comprenant une matrice de lignes et de colonnes définissant à leurs intersections un arrangement de positions (94) de codage de signaux, au moins une des surfaces majeures ayant déposé sur elle des symboles d'identification en association avec chaque ligne et colonne de sorte que chaque position de codage définit un symbole d'identification unique qui peut être codé dans le masque en perforant l'endroit pour former un trou (96) entre les surface majeures, chaque trou fournissant un chemin optique pour le codage optique du symbole d'identification choisi associé au type de module et numéro de série, un agrégat de boîtier comprenant une partie de base (84) et une partie couvercle (86), chacue ayant une surface majeure (86, 87) adaptée et chacune ayant une pluralité de guides d'onde optiques (100—108) qui la traversent, une extrémité des guides d'onde dans chaque partie se terminant à la surface majeure adaptée dans un arrangement en matrice d'intersections de lignes et de colonnes correspondant à la matrice des positions de codage de signaux et l'autre extrèmité des guides d'onde se terminant dans l'unité de surveillance (28), la partie couvercle

LIBERTY EXHIBIT 1029, Page 12
Liberty Energy, Inc. and Liberty Oilfield Services LLC v. U.S. Well Services, LLC, IPR2024-01274

et la partie de base étant adaptées pour contenir ladite plaque de données entre elles de façon semipermanente (89) et en sortie que les matrices de guides d'onde coïncident avec la matrice de codage pour fournir un chemin optique complet pour chaque symbole d'identification codé, et dans lequel les moyens de transmission (68—70) fournissent des signaux d'interrogation optiques aux guides d'onde d'une des parties de l'agrégat de bôter et les moyens de réception (50, 52) reçoivent les signaux optiques de données d'identification codées des guides d'onde de l'autre des dites parties.

6. Système selon la revendication 1, dont lequel chacune des unités (179) d'identification de module de moteur comprend un moyen d'assemblage de plaque de données (140) comprenant un ou plusieurs réseaux d'impédances (146—150) disposées en colonnes sur une surface majeure de celle-ci, chaque colonne étant associée avec un symbole d'identification particulier et chacune comprenant des chemins (154—163) d'impédance parallèles entre une barre d'entrée (168) et une barre de sortie (170—174) pour fournir, en addition, une valeur d'impédance fondamentale, les réseaux d'impédances étant adaptés pour fournir une valeur d'impédance codée différente de la valeur d'impédance fondamental par interruption de la continuité électrique des dites barres en un ou plusieurs endroits (152) prédisposés entre les chemins d'impédance parallèles, les endroits prédisposés étant arrangés en lignes dans chaque colonne chacun associé à une d'une pluralité de valeurs de symbols d'identification impimées sur la surface majeur, de sorte que chacune des valeurs d'impédance codés correspond à une valeur de symbole d'identification particulière, les signaux des symbols d'identification de chaque colonne et les valeurs de symbole de chaque ligne formant, en combinaison, les signaux de données d'identification pour le module de moteur associé, l'assemblage de plaque de données comprenant en outre une pluralité de contacts électriques (176) connectés à chaque barre d'entrée et barre de sortie du réseau et un contact de source de signal avec une valeur d'impédance de référence (178) en série avec celui-ci, et un assemblage de boîtier comprenant une partie de base (180) et une partie couvercle (184), chacune ayant une surface majeure (183) adaptée, la partie de base comprenant une pluralité de contacts électriques (182) adaptés pour entrer en contact avec les contacts électriques de la plaque de données et connecté (168—174) à l'unité de surveillance, la partie couvercle et la partie de base étant adaptées pour contenir ladite plaque de donnés entre elles de façon semipermanente avec contact électrique du masque et des contacts de la partie de base, et dans lequel les moyens de transmission (68—70) fournissent les signaux d'interrogation entre le contact de source de signal et chacun des contacts de la barre de sortie de l'unité d'identification et les moyens de réception (50—52) reçoivent les signaux des symboles d'identification comme amplitude signal proportionnelle au rapport de la valeur d'impédance codée à la valeur d'impédance de référence.

7. Unité d'identification de module de moteur (80) pour fournir les données de signaux d'identification d'un type de module de moteur et de numéro de série à une unité de surveillance (28) en réponse à des signaux d'interrogations qui y sont présentés, caractérisé par un masque optique (82) sous forme de plaque pour des données ayant des surfaces majeures définissant une partie de codage optique (90) comprenant une matric de lignes et de colonnes définissant à leurs intersections un arrangement de positions (94) de codage de signaux, au moins une des surfaces majeures ayant déposé sur elle des symboles d'identification en association avec chaque ligne et colonne de sorte que chaque position de codage définit un symbole d'identification unique qui peut être codé dans le masque en perforant l'endroit pour former un trou (96) entre les surfaces majeures, chaque trou fournissant un chemin optique pour le codage optique du symbole d'identification choisi associé au type de module et numéro de série, un agrégat de boîtier comprenant une partie de base (84) et une partie couvercle (86), chacune ayant une surface majeure (86, 87) adaptée et chacune ayant une pluralité de guides d'onde optiques (100—108) qui la traversent, une extrémité des guides d'onde dans chaque partie se terminant à la surface majeure adaptée dans un arrangement en matrice d'intersections de lignes et de colonnes correspondant à la matrice des positions de codage de signaux et l'autre extrémite des guides d'onde se terminant dans l'unité de surveillance (28), la partie couvercle et la partie de base étant adaptées pour contenir ladite plaque de données entre elles de façon semipermanente (89) et en sorte que les matrices de guides d'onde coïncident avec la matric de codage pour fournir un chemin optique complet pour chaque symbole d'identification codé, l'unité d'identification de module recevant des signaux d'interrogation optiques par les guides d'onde d'une partie de l'agrégat de boîtier et fournissant des signaux de données d'identification codées par le guide d'onde associé avec l'autre desdites parties.

8. Unité d'identification de module de moteur (179) pour fournir des signaux de données d'identification d'un type de module de moteur et de numéro de série à une unité de surveillance (28) en réponse à des signaux d'interrogations qui y sont présentés, caractérisé par un moyen d'assemblage de plaque de données (140) comprenant un ou plusieurs réseaux d'impédance (146—150) disposées en colonnes sur une surface majeure de celle-ci,

LIBERTY EXHIBIT 1029, Page 13
Liberty Energy, Inc. and Liberty Oilfield Services LLC v. U.S. Well Services, LLC, IPR2024-01274

chaque colonne étant associée avec un symbole d'identification particulier et chacune comprenant des chemins (154—163) d'impédance parallèle entre une barre d'entrée (168) et une barre de sortie (170—174) pour fournir, en addition, une valeur d'impédance fondamentale, les réseaux d'impédances étant adaptés pour fournir une valeur d'impédance codée différente de la valeur d'impédance fondamental par interruption de la continuité électrique des dites barres en ou plusieurs endroits (152) prédisposés entre les chemins d'impédance parallèles, les endroits prédisposés étant arrangés en lignes dans chaque colonne chacun associé à une d'une pluralité de valeurs de symboles d'identification imprimés sur la surface majeure, de sorte que chacune des valeurs d'impédance codés correspond à une valeur de symbole d'identification particulière, les signaux de symboles d'identification de chaque colonne et les valeurs de symbole de chaque ligne formant, en combinaison, les signaux de données d'identification pour le module de moteur associé, l'assemblage de plaque de données comprenant en outre une pluralité de contacts électriques (176) connectés à chaque barre d'entré et barre de sortie du réseau et un contact de source de signal avec une valeur d'impédance de référence (178) en série avec celui-ci, et un assemblage de boîtier comprenant une partie de base (180) et une partie couvercle (184), chacune ayant une surface majeure (183) adaptée, la partie de base comprenant une pluralité de contacts électriques (182) adapté pour entrer en contact avec les contacts électriques de la plaque de données et connectés (168—174) à l'unité de surveillance, la partie couvercle et la partie de base étant adaptées pour contenir ladite plaque de données entre elles de façon semipermanente avec contact électrique du masque et les contacts de la partie de base de l'unité d'identification de module répondant aux signaux d'interrogation présentés au contact de source de signal et à chacun des contacts de la barre de sortie pour fournir chaque signal de de symbole d'identification du réseau comme un signal à amplitude proportionnelle au rapport la valeur de l'impédance codée et la valeur d'impédance de référence.

LIBERTY EXHIBIT 1029, Page 14
Liberty Energy, Inc. and Liberty Oilfield Services LLC v. U.S. Well Services, LLC, IPR2024-01274

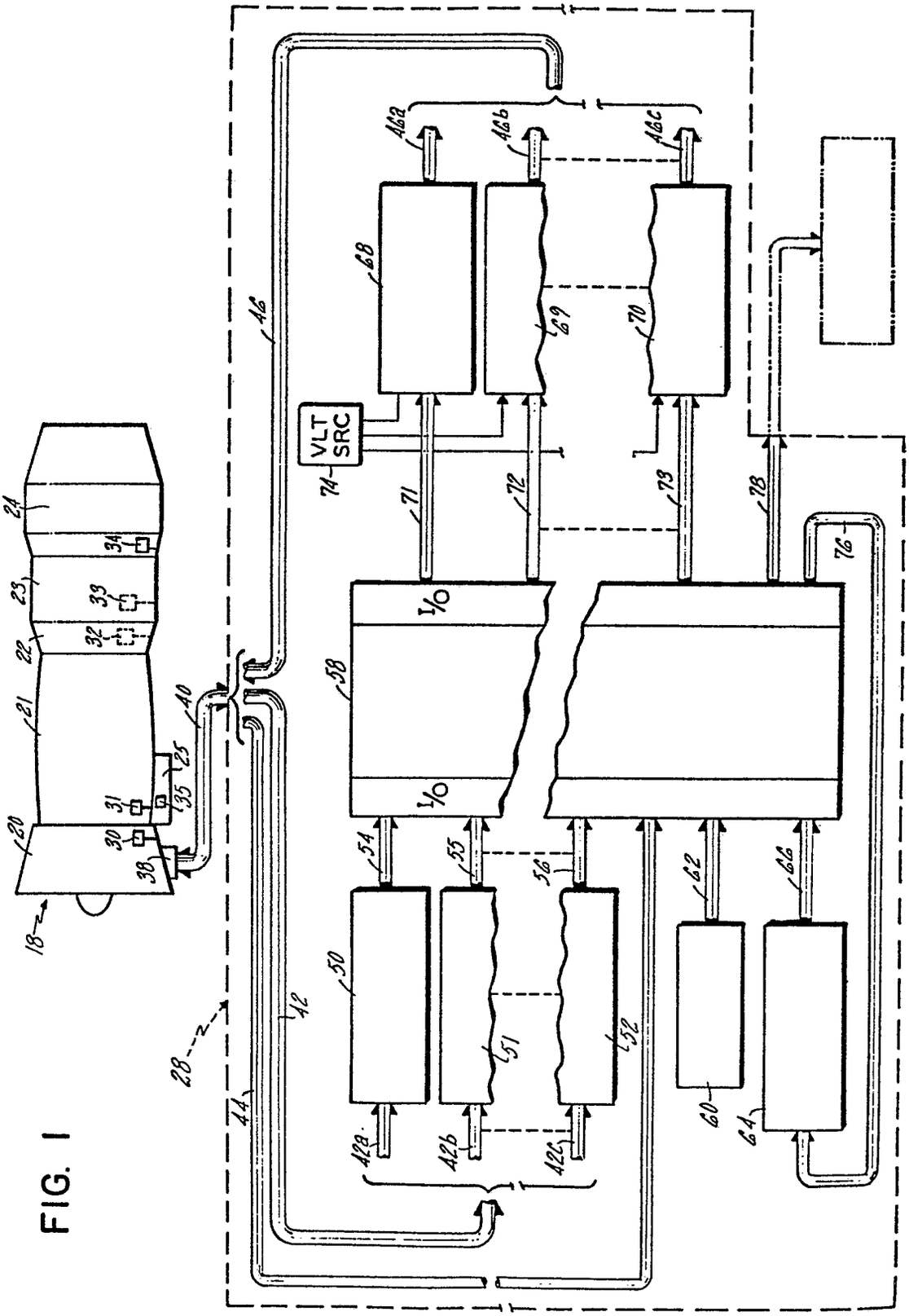

FIG. 1

LIBERTY EXHIBIT 1029, Page 15
Liberty Energy, Inc. and Liberty Oilfield Services LLC v. U.S. Well Services, LLC, IPR2024-01274

FIG. 2

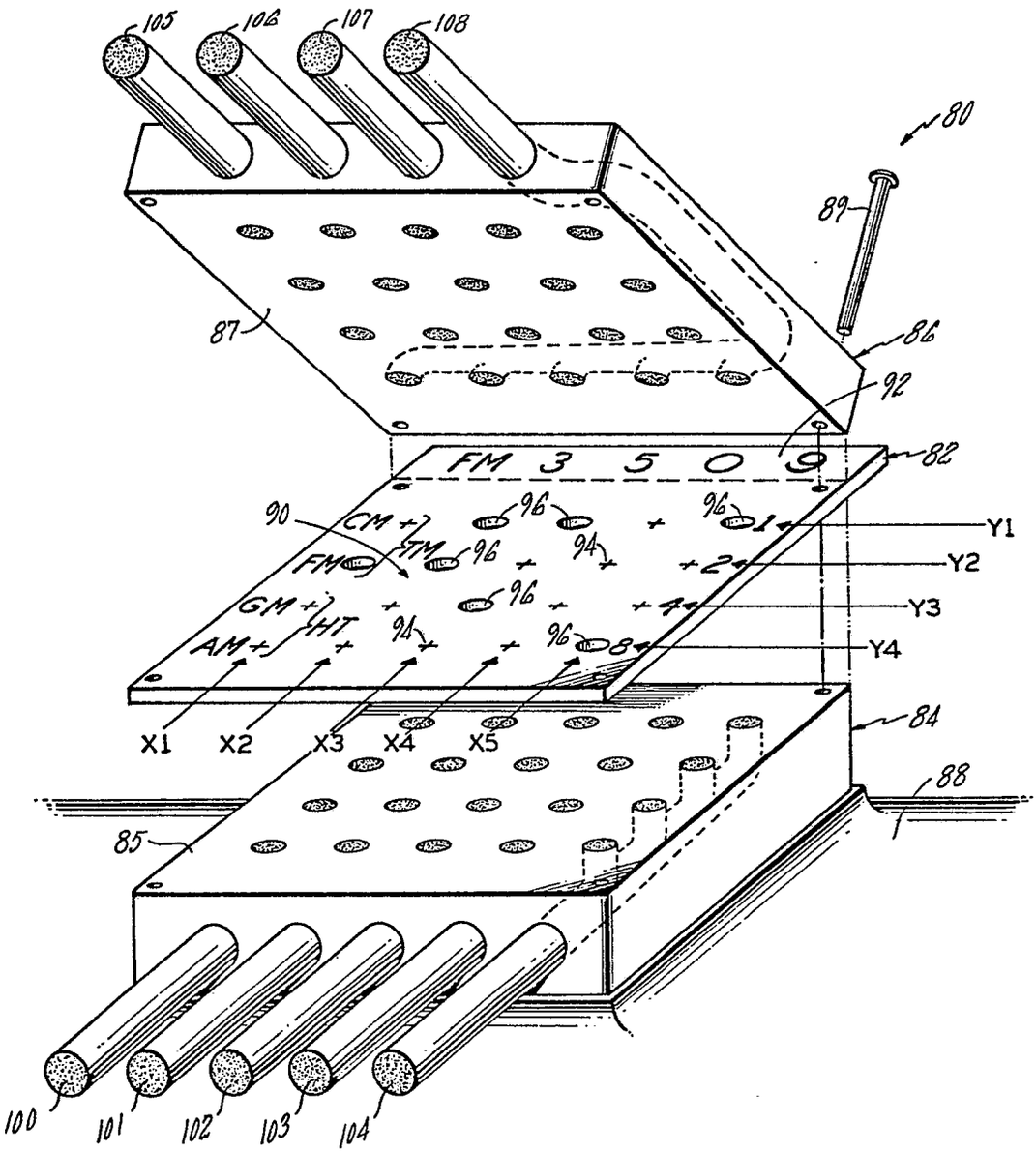

LIBERTY EXHIBIT 1029, Page 16
Liberty Energy, Inc. and Liberty Oilfield Services LLC v. U.S. Well Services, LLC, IPR2024-01274

FIG. 3

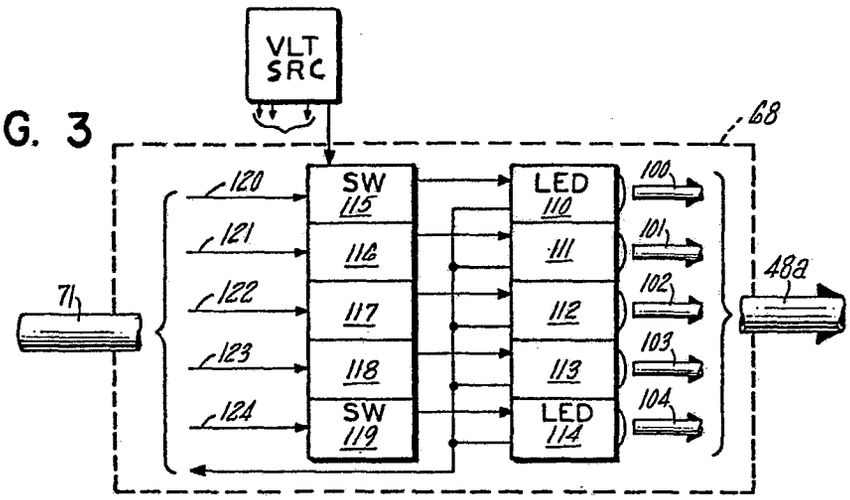

FIG. 4

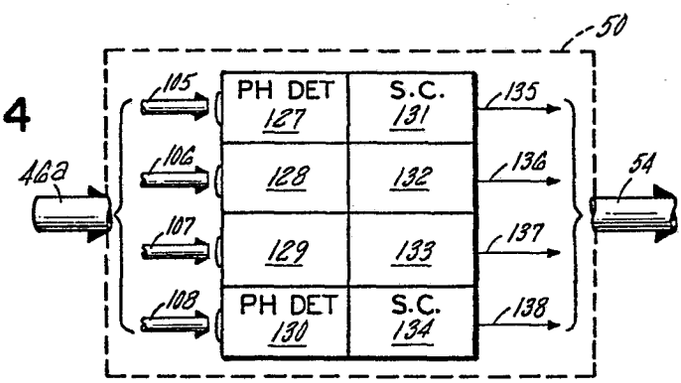

FIG. 9

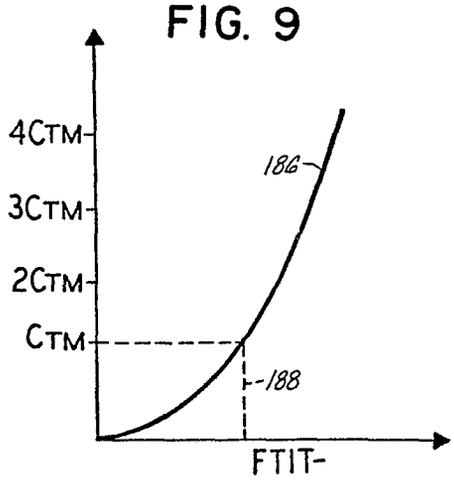

FIG. 10

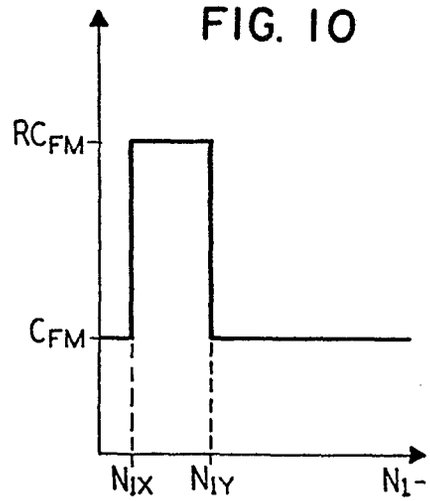

LIBERTY EXHIBIT 1029, Page 17
Liberty Energy, Inc. and Liberty Oilfield Services LLC v. U.S. Well Services, LLC, IPR2024-01274

FIG. 5

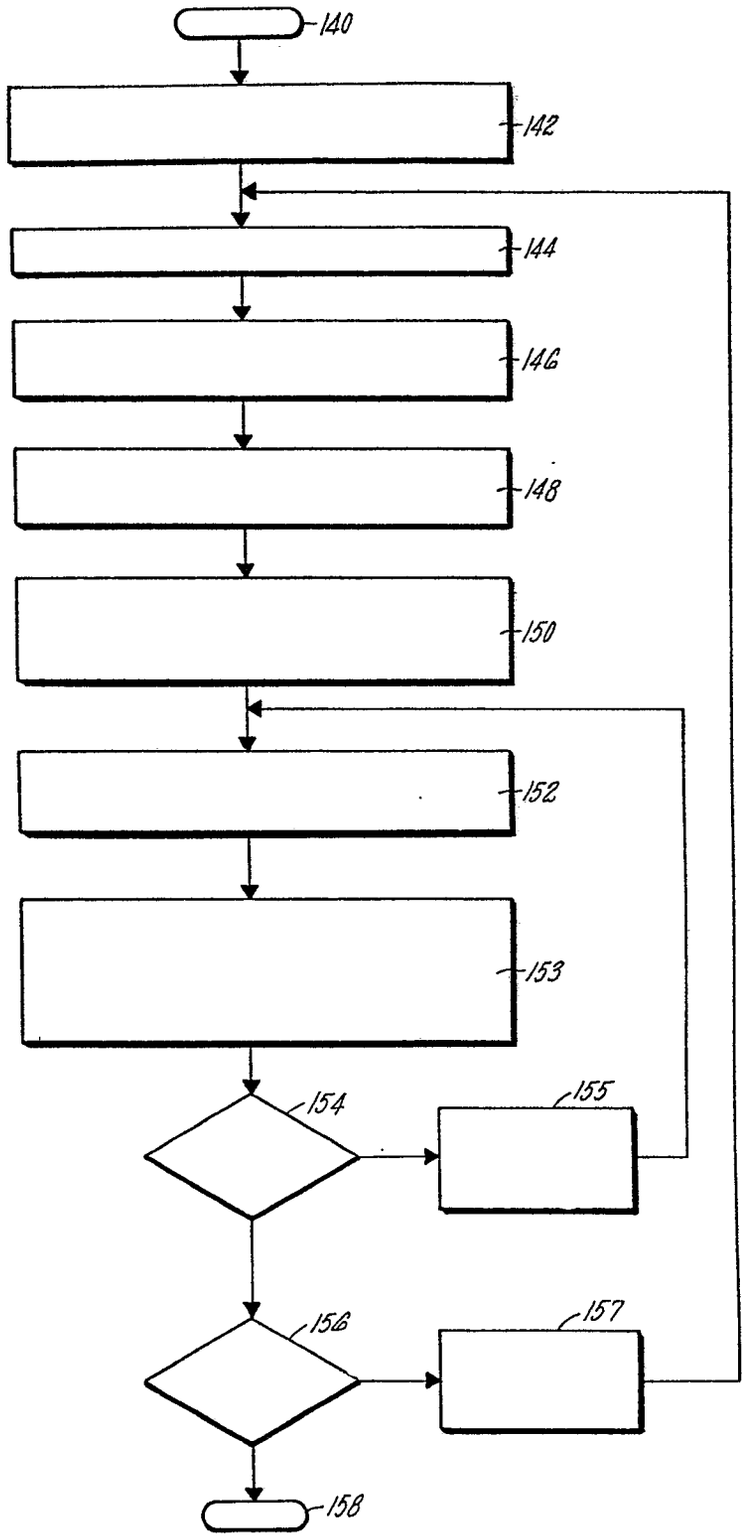

LIBERTY EXHIBIT 1029, Page 18
Liberty Energy, Inc. and Liberty Oilfield Services LLC v. U.S. Well Services, LLC, IPR2024-01274

FIG. 6

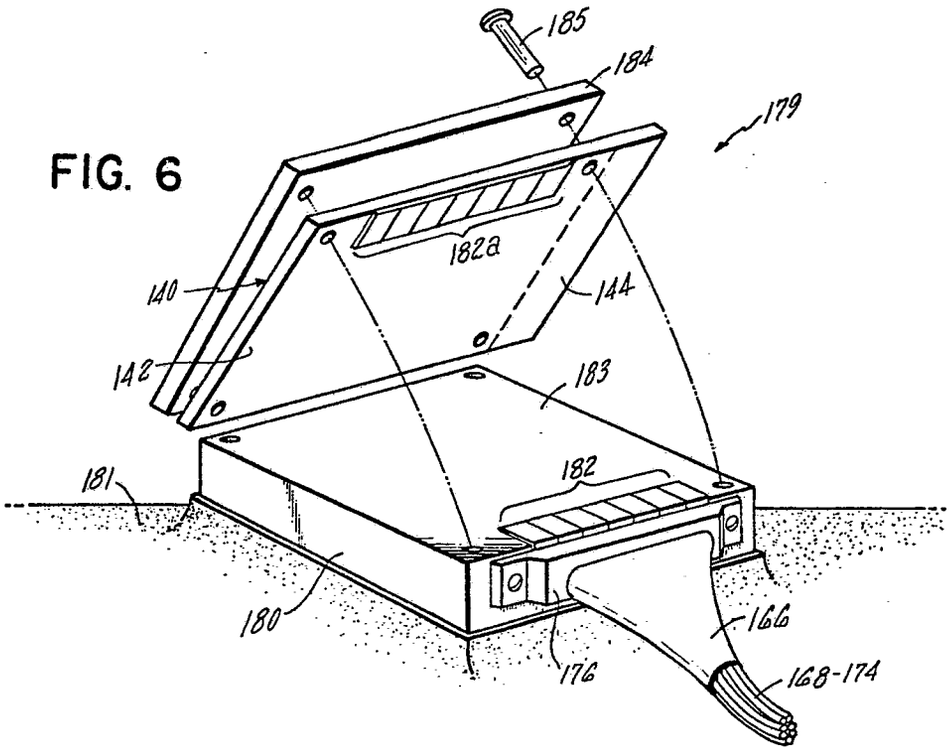

FIG. 7

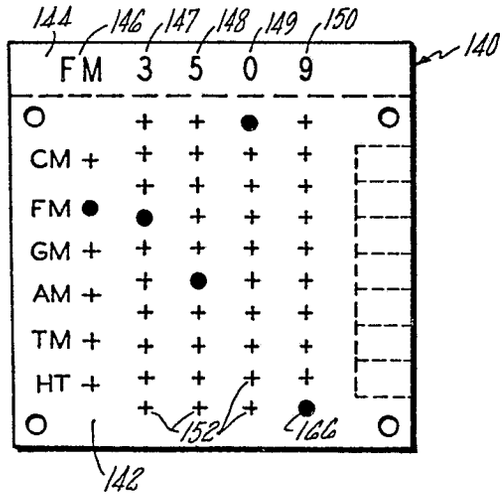

LIBERTY EXHIBIT 1029, Page 19
Liberty Energy, Inc. and Liberty Oilfield Services LLC v. U.S. Well Services, LLC, IPR2024-01274

FIG. 8

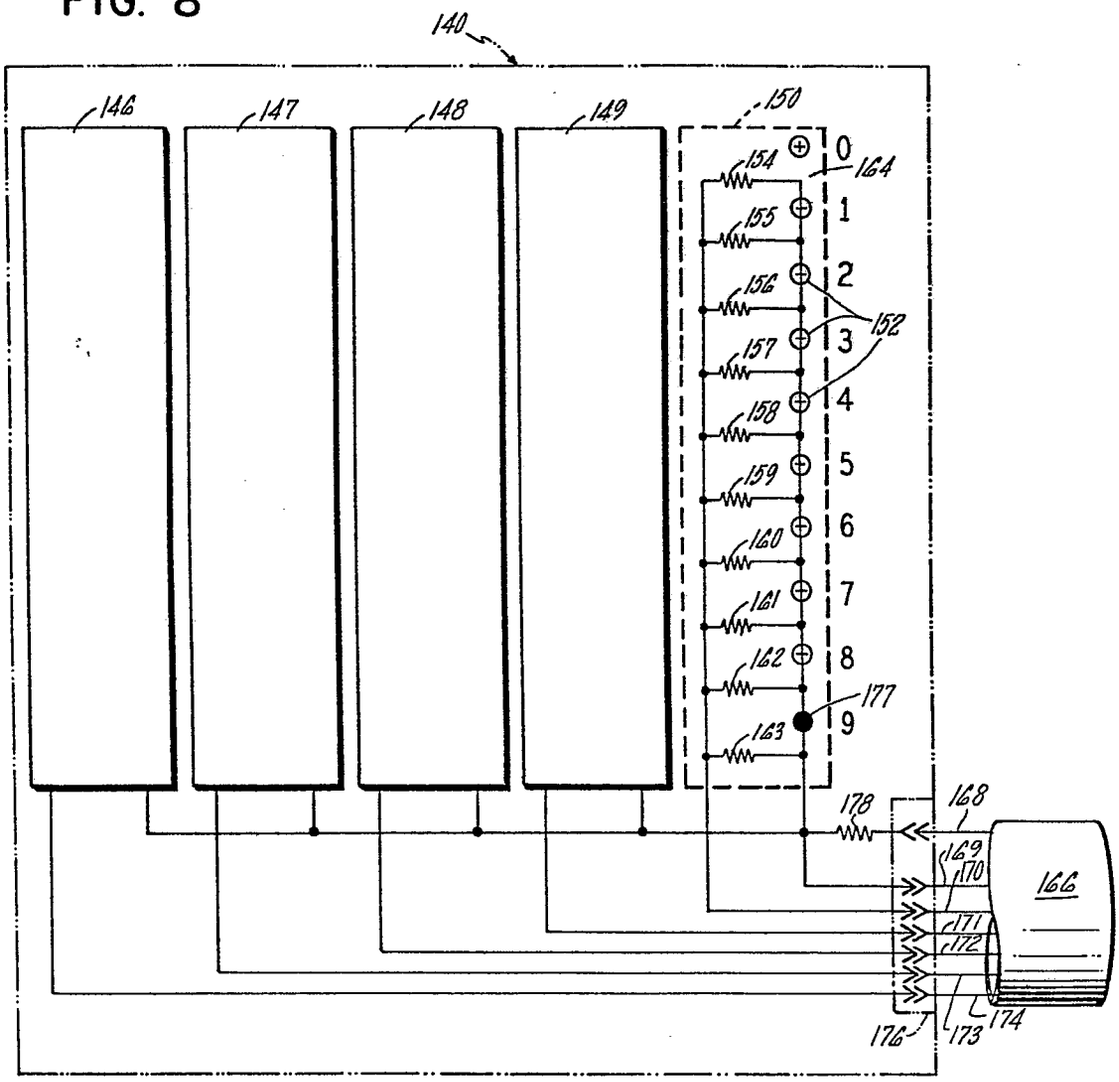

LIBERTY EXHIBIT 1029, Page 20
Liberty Energy, Inc. and Liberty Oilfield Services LLC v. U.S. Well Services, LLC, IPR2024-01274

FIG. 11

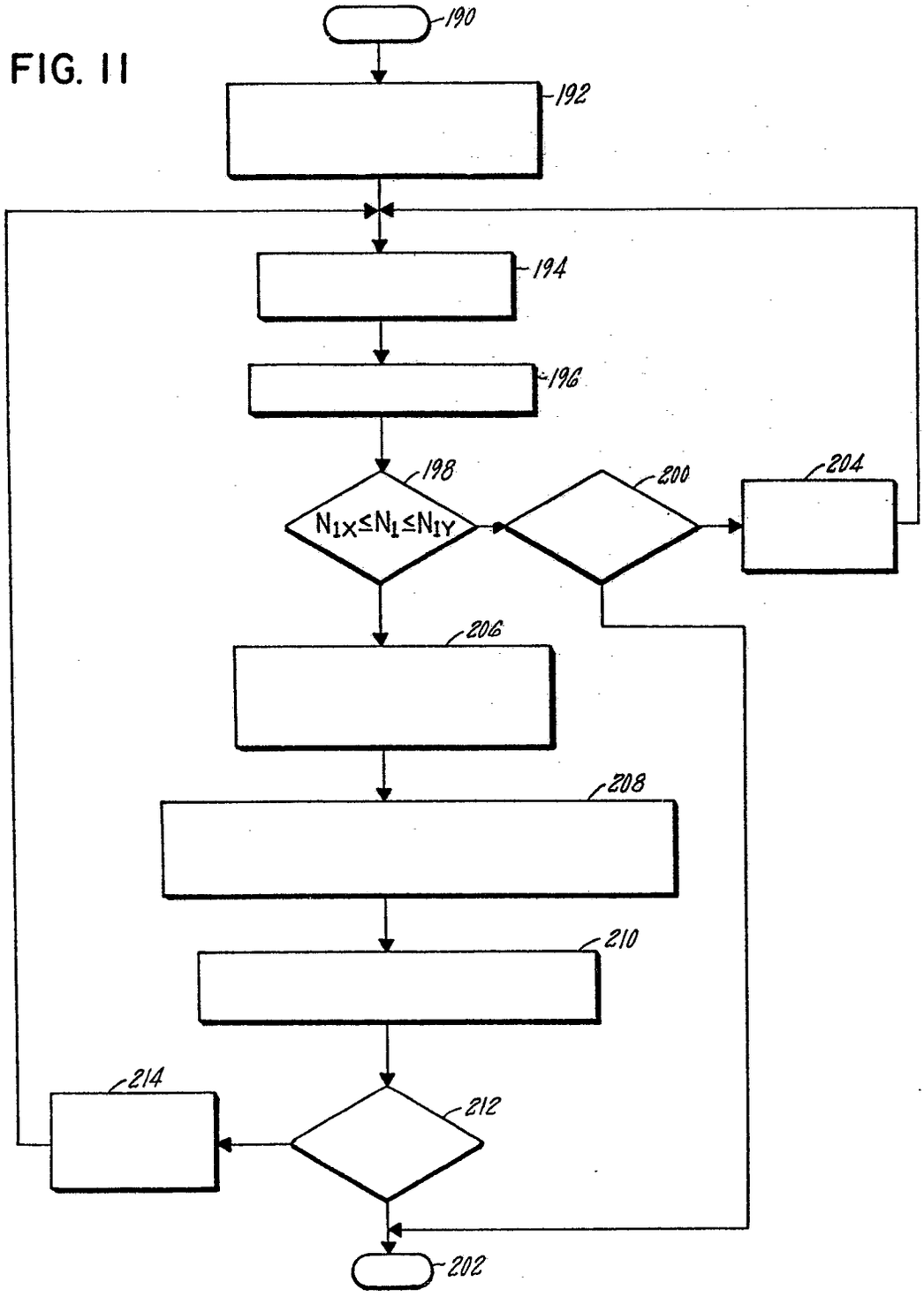

LIBERTY EXHIBIT 1029, Page 21
Liberty Energy, Inc. and Liberty Oilfield Services LLC v. U.S. Well Services, LLC, IPR2024-01274

FIG. 12

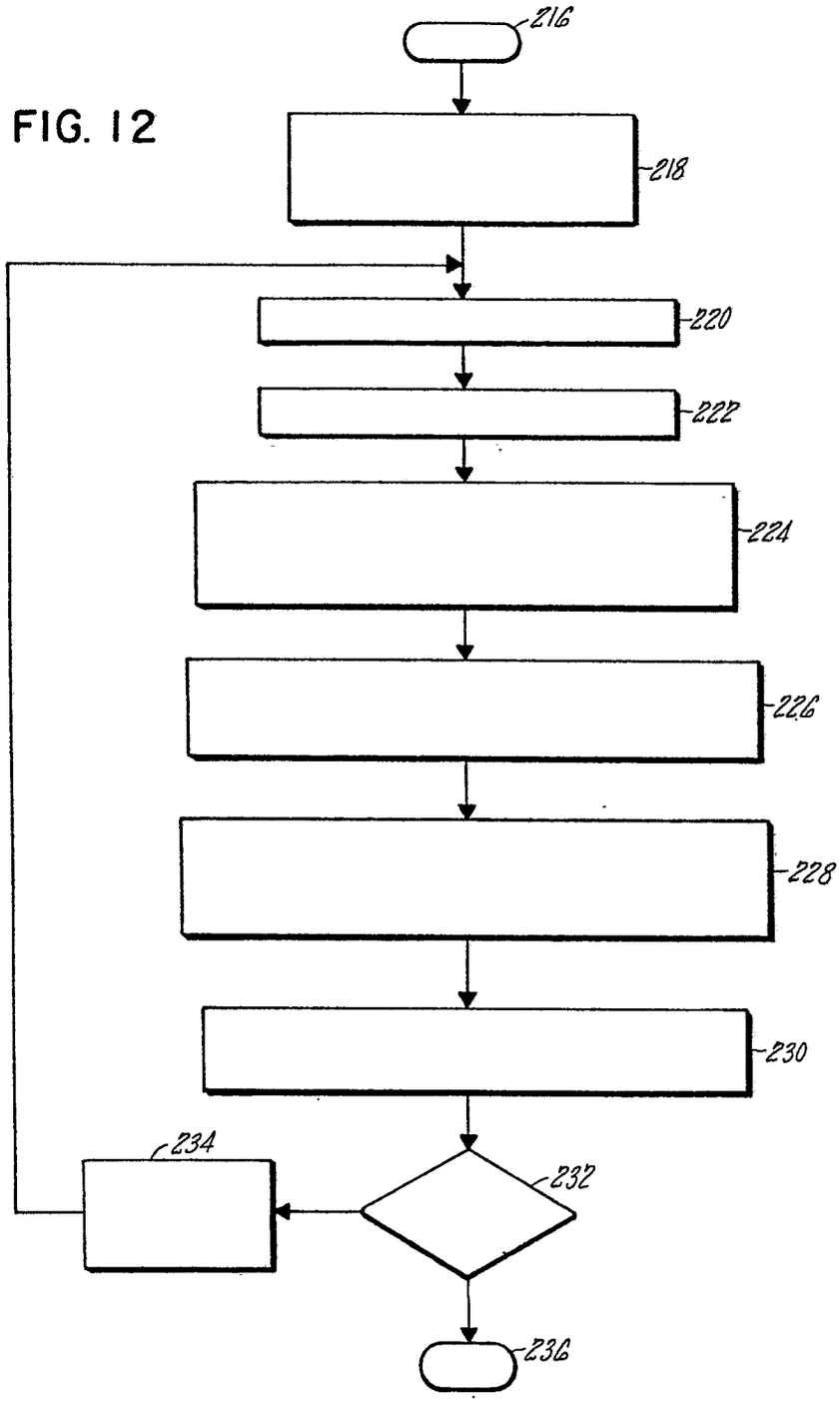

LIBERTY EXHIBIT 1029, Page 22
Liberty Energy, Inc. and Liberty Oilfield Services LLC v. U.S. Well Services, LLC, IPR2024-01274