US 20130306322A1

(19) United States

(12) Patent Application Publication

(10) Pub. No.: US 2013/0306322 A1

(43) Pub. Date: Nov. 21, 2013

Sanborn et al.

(54) **SYSTEM AND PROCESS FOR EXTRACTING OIL AND GAS BY HYDRAULIC FRACTURING**

(71) Applicant: **GENERAL ELECTRIC COMPANY**, Schenectady, NY (US)

(72) Inventors: **Stephen Duane Sanborn**, Copake, NY (US); **David Kamensky**, West Chester, OH (US); **John Andrew Westerheide**, Houston, TX (US); **Christopher Edward Wolfe**, Niskayuna, NY (US); **Hareesh Kumar Reddy Kommepalli**, Schenectady, NY (US)

(73) Assignee: **GENERAL ELECTRIC COMPANY**, Schenectady, NY (US)

(21) Appl. No.: **13/708,206**

(22) Filed: **Dec. 7, 2012**

Related U.S. Application Data

(60) Provisional application No. 61/649,563, filed on May 21, 2012.

Publication Classification

(51) **Int. Cl.**
E21B 43/26 (2006.01)

(52) **U.S. Cl.**
CPC *E21B 43/26* (2013.01)
USPC **166/308.1**

(57) **ABSTRACT**

A fracturing system is described. The system includes an electric motor-driven pumping sub-system, configured to pump a pressurized fracturing fluid into at least one wellbore, under high pressure conditions sufficient to increase the downhole pressure of the wellbore, to exceed that of the fracture gradient of the solid matter surrounding the wellbore. The system also includes an electric power generation sub-system that provides energy to the pumping sub-system. The electric power generation sub-system includes a multitude of electric motors that are powered by a single electrical feed source. A related process for extracting hydrocarbons from a reservoir rock formation by the fracturing operation is also described.

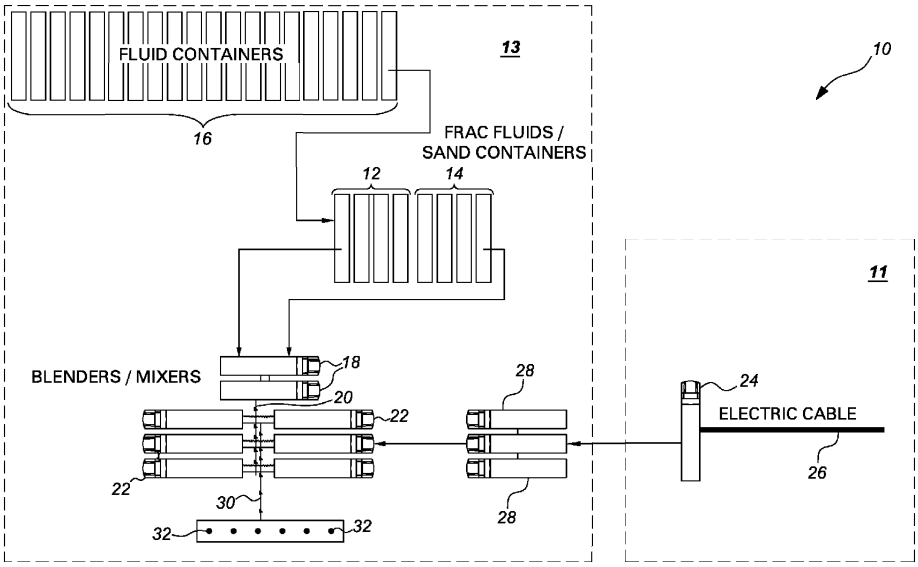

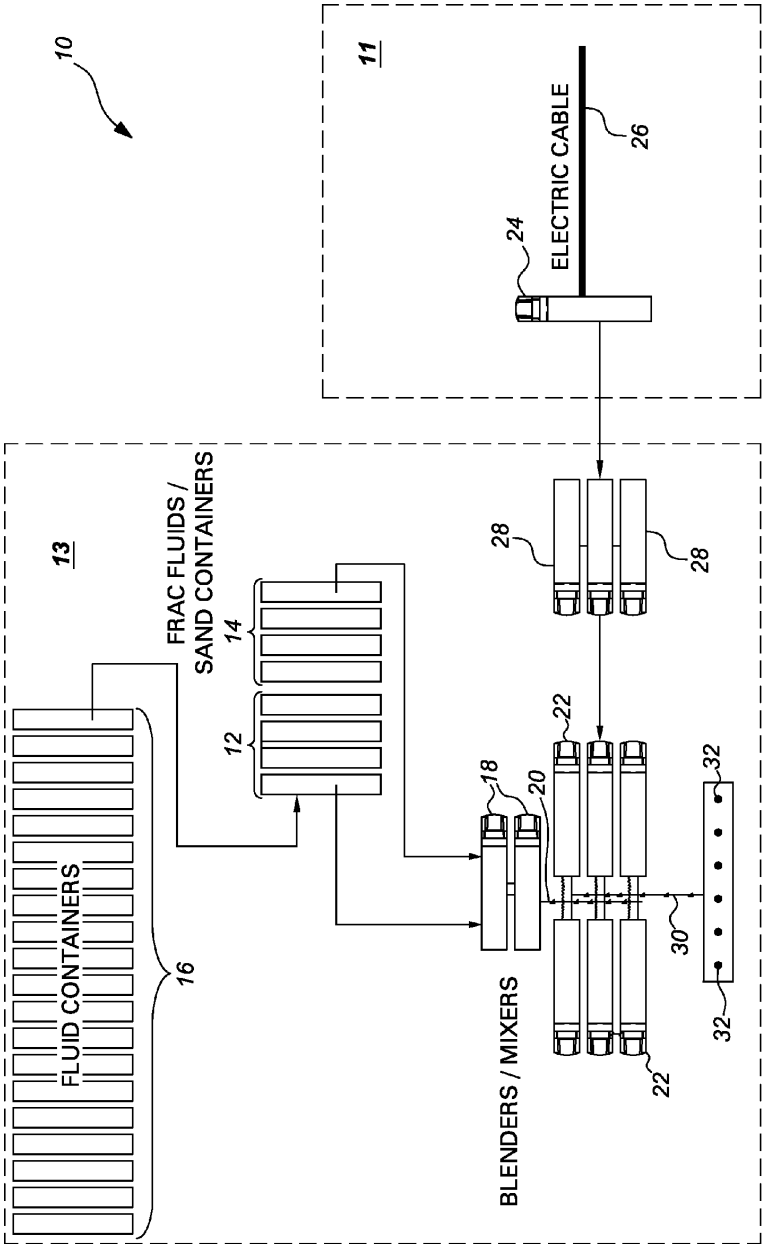
10
11
ELECTRIC CABLE
24
26
13
FRAC FLUIDS / SAND CONTAINERS
14
12
FLUID CONTAINERS
16
28
28
22
22
18
20
BLENDERS / MIXERS
30
32
32

Fig. 1

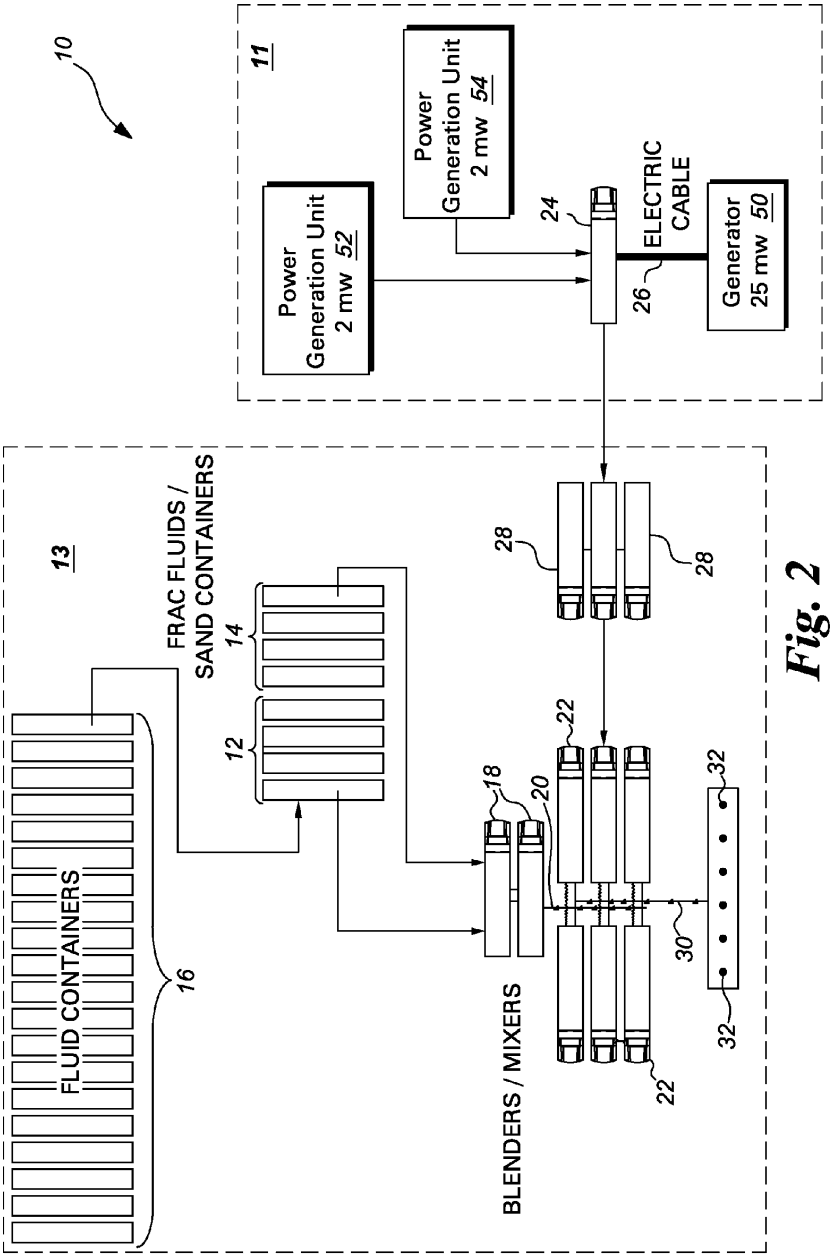
10
11
Power Generation Unit 2 mw 52
Power Generation Unit 2 mw 54
24
26
ELECTRIC CABLE
Generator 25 mw 50
13
FRAC FLUIDS / SAND CONTAINERS
14
12
FLUID CONTAINERS
16
28
28
22
18
20
BLENDERS / MIXERS
22
30
32
32

Fig. 2

SYSTEM AND PROCESS FOR EXTRACTING OIL AND GAS BY HYDRAULIC FRACTURING

CROSS REFERENCE TO RELATED APPLICATIONS

[0001] This Application claims the benefit of U.S. Provisional Application No. 61/649,563, filed May 21, 2012, which is herein incorporated in its entirety by reference.

TECHNICAL FIELD

[0002] This invention relates generally to the extraction of hydrocarbons from reservoir rock formations. In some specific embodiments, the invention relates to a portable and modular system that can be transported to an oil or gas field, and used to stimulate production from an oil or gas well.

BACKGROUND OF THE INVENTION

[0003] Hydraulic fracturing or "fracing" is a process for increasing the flow of oil or gas from a well. It is usually carried out by pumping specific types of liquids into a well, under pressures that are high enough to fracture the rock. A network of interconnected fractures are formed, and they serve as pore spaces for the movement of oil and natural gas to the wellbore. When used in combination with techniques such as horizontal drilling, hydraulic fracturing is capable of converting previously-unproductive rock formations into large natural gas fields, for example.

[0004] A hydraulic fracture is typically formed by pumping the fracturing fluid into the wellbore at a rate sufficient to create a downhole pressure that exceeds the fracture gradient of the surrounding rock. The rock cracks, and the fracture fluid continues farther into the rock, extending the crack into the depth of the well. Often, a proppant (as discussed below) is added into the injected fluid, to prevent the fractures from closing when the injection is stopped. The fracture that remains open is permeable enough to allow the flow of the desired gas or oil to the well, and eventually, to the surface for collection. The fracturing technique can be especially productive in the case of wells formed by horizontal drilling. These types of wells are formed by drilling holes that are substantially lateral, i.e., parallel with the rock layer that contains the fuels to be extracted. The lateral wells can have tremendous lengths, e.g., up to about 10,000 feet, after an initial, vertical depth into the rock formation.

[0005] Hydraulic fracturing equipment that is used in oil and natural gas fields includes a large number of components. Blenders, high-volume fracturing pumps, monitoring units, material tanks, hoses, electronics systems, and power units are just some of the components required for these operations. In a typical fracturing operation currently practiced, a large number of tractor trailers are used to support individual sets of diesel engines and fracturing pumps, along with associated equipment, such as transmission systems. As one example, 16 tractor trailers may support 16 diesel-powered, 2000 hp fracturing pumps. (Two of the engine/pump sets are typically employed for back-up purposes). High-capacity, high-power hydraulic pumps (e.g., triplex or quintuplex types) are commercially available from a number of sources. Collectively, the pumps provide sufficient pressure into one or more wellbores, to allow for the injection and movement of the slurry (water, proppants, and chemical additives), through thousands of feet of earth and rock. Fracturing equipment needs to be designed to operate over a wide range of pressures and injection rates, and can operate at about 100 Mpa (15,000 psi) or higher; and 265 L/s (100 barrels per minute), or higher. The power needed for these operations can exceed 20-30 megawatts.

[0006] A number of drawbacks are associated with most of the current types of fracturing equipment and systems. For example, the mechanical collection of many diesel engines and many pumps can lead to high inefficiencies in the overall pumping operation. Part of this inefficiency is due to maintenance requirements for each of a multitude of engines, and the potential for engine break-downs.

[0007] The use of large amounts of diesel fuel can also require extra safeguards, to address potential safety, noise, and environmental problems. Moreover, the number of tractor trailers required for the conventional fracturing system represents a relatively large and undesirable "footprint" at the drilling/fracturing site. (Since the use of diesel engines mandates the use of diesel fuel, additional space is required for diesel fuel tankers). This potentially large truck fleet also has significant "community impact", in terms of traffic congestion and road-surface wear and tear.

[0008] In view of some of these concerns and challenges, new hydraulic fracturing systems would be welcome in the industry. The new systems should reduce the number of diesel engines required for the pumping sub-system in a fracturing operation. The new systems should also simplify the power-delivery mechanism for energizing all of the pumps required for the fracturing process. In some preferred embodiments, the new systems should also reduce the amount of large equipment required at a hydraulic fracturing site, thereby reducing the ecological footprint at the site.

BRIEF DESCRIPTION

[0009] One embodiment of the invention is directed to a fracturing system, comprising:

- **[0010]** a) an electric motor-driven pumping sub-system, configured to pump a pressurized fracturing fluid into at least one wellbore, under high pressure conditions sufficient to increase the downhole pressure of the wellbore, to exceed that of the fracture gradient of the solid matter surrounding the wellbore; and
- **[0011]** b) an electric power generation sub-system that provides energy to the pumping sub-system, comprising a multitude of electric motors that are powered by a single electrical feed source.

[0012] Another embodiment of the invention is directed to a process for extracting hydrocarbons from a reservoir rock formation by a hydraulic fracturing operation, comprising the step of introducing a hydraulic fracturing treatment fluid into a subterranean formation at a pressure sufficient to form or to enhance at least one fracture within the subterranean formation. In this method, the fracturing treatment fluid is pumped into at least one wellbore in the subterranean formation by an electric motor-driven pumping sub-system, configured to pump the fluid into the wellbore under high pressure conditions sufficient to increase the downhole pressure of the wellbore, to exceed that of the fracture gradient of the solid matter surrounding the wellbore. The pumping sub-system is energized by an electric power generation sub-system that provides energy to the pumping sub-system, and the power generation sub-system comprises a multitude of electric motors that are powered by a single electrical feed source.

DRAWINGS

[0013] FIG. **1** is a schematic representation of a hydraulic fracturing system according to some embodiments of this invention.

[0014] FIG. **2** is a schematic representation of a hydraulic fracturing system according to other embodiments of the invention.

DESCRIPTION OF THE INVENTION

[0015] Approximating language, as used herein throughout the specification and claims, may be applied to modify any quantitative representation that could permissibly vary, without resulting in a change in the basic function to which it is related. Accordingly, a value modified by a term or terms, such as "about", is not limited to the precise value specified. In some instances, the approximating language may correspond to the precision of an instrument for measuring the value. The terms "first," "second," and the like, herein do not denote any order, quantity, or importance, but rather are used to distinguish one element from another.

[0016] As used herein, the terms "may" and "may be" indicate a possibility of an occurrence within a set of circumstances; a possession of a specified property, characteristic or function; and/or qualify another verb by expressing one or more of an ability, capability, or possibility associated with the qualified verb. Accordingly, usage of "may" and "may be" indicates that a modified term is apparently appropriate, capable, or suitable for an indicated capacity, function, or usage, while taking into account that in some circumstances, the modified term may sometimes not be appropriate, capable, or suitable. For example, in some circumstances, an event or capacity can be expected, while in other circumstances, the event or capacity cannot occur. This distinction is captured by the terms "may" and "may be", or "can" or "can be".

[0017] A hydraulic fracturing system is described herein. The system can be used as a drilling and stimulation technique, e.g., as a procedure that can increase the flow of oil or gas (e.g., natural gas) from a well within subsurface rock. The system comprises an electric motor-driven pumping sub-system. The sub-system is configured to pump a pressurized fracturing fluid into at least one wellbore, under high pressure conditions sufficient to increase the downhole pressure to exceed that of the fracture gradient of the rock surrounding the wellbore. The system further comprises an electric power generation sub-system that provides energy to the pumping sub-system. (For simplicity, the pumping sub-system and power sub-system may be referred to herein as the "pumping system" and the "power system", respectively).

[0018] In some preferred embodiments, the pumping system comprises a multitude of electric motors that are powered by a single electrical feed source, e.g., an electrical feeder. The source of the electrical feeder (directly or indirectly) may be a transmission line, sub-station, power generation facility, or a dedicated power generation sub-system, for example. (As exemplified herein, the power generation system or sub-system may be located on-site or off-site).

[0019] Moreover, in some specific cases, the electrical feed source may comprise at least one gas turbine engine. The gas turbine engine could be situated in a location remote from the pumping system. Alternatively, the gas turbine could be located on the same site (sometimes referred to as a "well-pad") as the pumping system. In some embodiments, the gas turbine can be fueled by natural gas, oil, or other carbon-based fuels that are obtained at the site, e.g., after drilling and stimulation of some of the well(s). (In other embodiments, the fuel can be piped to the site, or transported there via truck, and the like).

[0020] The pumping system may be arranged in many different ways, depending in part on various factors. They include: the size of the hydraulic fracturing operation, and any associated drilling operations. The size of the operations depends, in turn, on other factors as well, such as the vertical depth and horizontal length of the drilling and fracturing operations; the type and composition of earth and rock through which the drilling/fracturing operations will proceed; as well as the general drilling/fracturing system design. As briefly described herein, hydraulic fracturing operations often require a great deal of power for the pumping operation.

[0021] In one embodiment, the pumping system comprises one or more platforms, which can be mobile. Each platform can support one or more pumps, and one or more electrical motors, which together are sometimes referred to as pumping units or "pumpers". An electrical motor could power multiple pumps. However, in some specific embodiments (though not all embodiments), each electrical motor provides power for one pump. Techniques for providing the physical and electrical connections between the pumps and the motors are known in the art.

[0022] Many different types of pumps may be used; and they are commercially available from well-fracturing companies, or other drilling and drilling-support companies. Examples of pump suppliers include Baker Hughes, Halliburton, Weatherford, Weir Oil & Gas, and Bosch Rexroth. The size of each pump will depend on various factors, such as the overall pumping requirements at the well site (in terms of pumping pressure and pumping rate, for example); and the size of the platform on which the pump will be located. In some embodiments, each pump has a capacity in the range of about 2,000 hp to about 3,000 hp, although this range can vary considerably.

[0023] As one non-limiting illustration, each mobile platform can be the bed of a truck, e.g., the bed of a tractor-trailer rig, or a trailer attached to such a rig. Heavy-duty tractor-trailers are often quite suitable for carrying pumps, motors, and drilling equipment. Their ability to travel on the highway and over many other roads is a distinct advantage for transport of the necessary equipment and materials to many drilling and fracturing sites.

[0024] Each tractor-trailer can accommodate at least one pump, and a motor to drive the pump. In some embodiments, each tractor-trailer supports two pumps and two electric motors, each associated with one of the pumps. As described briefly below, the ability to energize each motor from a single electrical feed source is a distinct advantage over prior art systems, e.g., those that rely on dedicated, direct-drive engines on each tractor-trailer.

[0025] Hydraulic fracturing operations include a number of different types of equipment and operational units, and substantially all of the equipment and materials must be located at the site of the fracturing operation. In general, the fracturing operations can include:

[0026] 1) supply containers for fracturing fluid components (including large water supplies), sand and/or other proppants, and various fracturing chemicals/additives;

[0027] 2) blending equipment for blending the fracturing fluid/solid components according to pre-selected proportions;

[0028] 3) at least one high-horsepower fracturing pump ("pumper"), as described above;

[0029] 4) at least one platform (and usually, and usually, a number of them), such as a tractor trailer bed; to support motors, generators, pumps; and blenders; and

[0030] 5) an operations and control unit, usually computer-based, and containing monitoring, data-recording, and communication equipment, as well as remote pumper controls to monitor and control each stage of the fracturing process, and to record data for each phase.

[0031] A variety of other equipment, tools, and the like, may be on site as well, such as transformers, power distribution components, switchgear (including fuses or circuit breakers), cables, hoses, air conditioning equipment, wireline, cranes, fluid pumps, and the like. Those familiar with drilling and fracturing operations understand the purpose of this other equipment, as well as the way in which it is deployed at the site.

[0032] In regard to some specific examples, the switchgear and power distribution components provide a number of important attributes to the fracturing operation. For example, they provide distribution and sharing of the total power from the generation sub-system, to and among the units of the pumping sub-system. They also control multiple lines of power flow, such that faults or failures in individual components or units do not cause secondary damage to other components or units. In this manner, the secondary damage within a component or unit with a fault or failure is minimized. Moreover, selected power flow can be interrupted for the purpose of maintenance and other field operations, while providing a safe working environment for the personnel involved. Moreover, this allows other units in the power generation or pumping sub-systems to be employed as appropriate, while such maintenance and field operations are being carried out.

[0033] As alluded to above, embodiments of the present invention eliminate or minimize many of these drawbacks. FIG. **1** is a schematic representation of a hydraulic fracturing system according to some embodiments of this invention. The figure is a non-limiting illustration of various components at a wellpad site **10**. As a general means of simplifying the description, section **11** can be referred to as the power system; and section **13** can be referred to as the pumping system.

[0034] With continued reference to FIG. **1**, wellpad site **10** contains one or more containers **12** for storing fracturing fluids. The site also contains one or more containers **14** for storing sand or other types of proppants (e.g., ceramic beads or other particulates). The fracturing fluids **12** primarily comprise water, e.g., supplied from storage containers **16**. However, the fluids also contain various chemical additives, commercially available, that can aid in creating rock fractures; as well as protecting the wellbore surfaces.

[0035] The proppant materials can be ceramic beads, as mentioned above, or grains of sand or other particulates. As those skilled in the art understand, injection of the proppant materials prevents the hydraulic fractures from closing when the injection has stopped. In this manner, the process operators can maintain the "fracture width", or slow the reduction in width. This can be especially important at deeper fracturing depths, where pressure and stresses on fractures are higher.

[0036] Pre-selected proportions of the fracturing fluid components (including chemical additives) and proppants are directed into at least one blender/mixing unit **18** (two such units are depicted in the figure). Typically, the blender thoroughly mixes the various components. At least one large capacity pump in the blending unit is employed to feed the mixture to the pumping sub-system. As in the case of the motor/pump platforms described below, the blender unit may be situated on the bed of a trailer-tractor, e.g., a truck having a trailer with an average length of about 35-50 feet; an average width of about 7-12 feet; and an average weight capacity of about 60,000 to about 100,000 pounds. (These dimensions may of course vary as well, in some circumstances).

[0037] The blended fracturing fluid composition is then directed (by pumping) into a piping array **20**, that is capable of accommodating dense fluids under relatively high pressures and high capacities, e.g., about 100 psi to about 140 psi, at about 60-80 barrels per minute, or higher. The piping array **20** is then used to distribute the fracturing fluid into a number of pumpers **22** (six are illustrated here, as a general example). Each pumper accommodates an appropriate fraction of the fluid, and contributes to the task of bringing the fracturing material up to the high pressures required for entry into one or more wellheads.

[0038] As described above, each pumper **22** typically (though not always) includes at least one pump, and an electric motor to drive that pump. In some preferred embodiments (depending on the relative size of the platform, motors and pumps), each pumper comprises two pump-motor sets. The electric motors can all be powered by a single electrical feed source **24**.

[0039] Electrical feed source **24** can comprise a power distribution unit, for example. In some embodiments, the power distribution unit is fed by a single electrical transmission cable **26**, that may originate from any high-voltage transmission line (not shown) or other electrical power source. Feed source **24** may comprise a conventional distribution circuit, a transformer to reduce the voltage coming from electrical cable **26**, or some combination of a distribution circuit and transformer (or multiple transformers).

[0040] In some embodiments, at least one variable-frequency drive (VFD) **28** is employed to control the current from electrical feed source **24**, according to desired parameters. (Three of the VFD drives are depicted in FIG. **1**, as part of the pumping sub-system. As with other components, they can be deployed on tractor trailers or other suitable platforms. For the sake of simplicity, the VFD drives are depicted as the trailers on which they might be situated). As those skilled in the art understand, the VFD's control the frequency of the electrical power supplied to motors, as well as controlling current and voltage. This "controllability" allows energy savings, and reduced strain on each motor, during variable demand in pumping power. The general design and use of VFD's for an application like that described herein can be carried out by those familiar with electric motor technology and electric power system technology, without undue effort.

[0041] Variable-frequency drives **28** direct the required electrical power to the pumpers **22**, through one or more suitable electrical conduits (shown in simple form, in the figure). In one embodiment, each of the three VFD's is connected to two of the pumpers **22**. The most appropriate ratio of VFD's (**28**) to pumpers (**22**) will depend on some of the other factors described herein, including the size and number of electrical motors employed.

[0042] As noted above, the electrical-based fracturing embodiments described herein can provide a number of important advantages over prior art, mechanical-based fracturing systems. With the elimination of individual diesel engines for pumping, each platform/trailer can accommodate much greater pumping-capacity. Thus, the number of trailers on the site can be greatly reduced. Moreover, the electric motors that deliver power to each pump—supplied by one primary power line and the associated distribution and VFD equipment—are generally cleaner and more reliable than the diesel power systems.

[0043] As alluded to previously, portions of the fracturing fluid are then directed to each pumper **22**. The pumpers are capable of increasing the pressure of the fluid to the very high levels typically needed for fracturing, e.g., usually above about 5,000 psi, and often, about 10,000 psi or higher. The total fracturing fluid exiting pumpers **22** can then be directed through wellhead conduit (e.g., at least one pipe) **30**, to at least one of the wellheads **32**. (The number of wellheads and conduits depicted is exemplary, and can vary considerably, depending in part on the nature of the site being explored).

[0044] Those skilled in the art are familiar with the formation and use of wellbores drilled into reservoir rock formations, or into any type of subterranean formation. Each wellhead **32** may represent the terminus for a separate wellbore. Each wellbore may extend for some distance, vertically, into the earth, and then extend laterally (i.e., parallel with the rock layer) for thousands of feet, e.g., up to at least about 10,000 feet. The wellbores may, for example, extend in many different lateral (though underground) directions emanating from site **10**. In this manner, a very large reservoir of rock-bearing fuel (e.g., petroleum and natural gas) can be stimulated for release and recovery, more efficiently than with other above-ground pumping and power systems.

[0045] Another embodiment of the hydraulic fracturing system is depicted in FIG. **2**. Features and units that are identical to those of FIG. **1** are noted in the figure, and are usually provided with identical numbers. As in the previous embodiment, the system includes the power sub-system **11** and the pumping sub-system **13**, along with an electrical feed source **24**, electrical transmission cable **26**; and VFD's **28**. Other units of the pumping system **13** are the same as well, e.g., storage containers **12**, **14**; and pumpers **22**.

[0046] In this embodiment of FIG. **2**, power is provided on-site. As an example, a relatively large generator unit **50** can provide the power to electrical feed source **24**, through cable **26**. Many different types of generators can be used for this purpose, and the size will depend on a number of variables, including the size of the overall fracturing operation. As a non-limiting example, the generator can be one capable of providing about 15 MW to about 30 MW of power (i.e., usually greater than about 15 MW of power). The generator can be energized from any available source of mechanical energy, e.g., a turbine; hydro-power; compressed air, an internal combustion engine, and the like. In some embodiments, the turbine or combustion engine used to energize the generator can be supplied with fuel that is at least partially obtained from the fracturing site itself, as alluded to previously.

[0047] In addition to generator **50**, this embodiment can include at least one smaller power generation unit **52** (FIG. **2**). The smaller unit(s) can each provide about 1 MW to about 10 MW of power, although this range can vary as well. In FIG. **2**, two of the smaller power generation units (**52**, **54**) are depicted, and each can supply electricity directly to feed source **24**. (In other embodiments, greater than two of the smaller power generation units may be employed). The smaller units can provide much greater flexibility, in terms of power requirements, during operation of the fracturing site.

[0048] In some cases, one or more of the smaller units may comprise a gas engine, attached to, or incorporated with, a suitable generator. As those skilled in the art understand, gas engines are internal combustion engines that can operate on a variety of fuels, such as natural gas, landfill gas, coal gas, bio-derived fuels, and the like. (Some of the smaller units can also use traditional hydrocarbon fuels, e.g., liquid hydrocarbons). The flexibility of both fuel sources and engine size can provide considerable advantages, in terms of the gas engines functioning as an accessory to generator **50**. Non-limiting examples of commercial gas engines include various Jenbacher and Waukesha generation units. (In other instances, one or more of the smaller units can be a gas turbine, e.g., in the form of a gas turbine generator set, capable of providing power in the range described for units **52**,**54** (FIG. **2**)).

[0049] It should be understood from the above teachings that a process for extracting oil and gas by hydraulic fracturing represents another embodiment of this invention. The process includes the use of a pumping system based primarily on electric motors that power fracturing pumps. In preferred embodiments, the electric motors are powered by a power generation sub-system that uses far fewer individual electrical generators and associated components than the conventional hydraulic fracturing systems, e.g., as compared to the conventional, dedicated engine-pump approach. Other, general details regarding hydraulic fracturing can be found in a large number of references. Non-limiting examples include U.S. Pat. No. 8,309,498 (Funkhouser et al); U.S. Pat. No. 7,901,314 (Salvaire et al); U.S. Pat. No. 5,551,516 (Norman et al); and U.S. Pat. No. 3,888,311 (Cooke), all incorporated herein by reference.

[0050] Coordination between the power generation sub-system and the pumping sub-system is carried out by a control system. The control system provides sufficient power quantity and "quality" (i.e., in terms of frequency, voltage, and harmonics) to each pump/electric motor set (i.e, pumper **22**). The control system also prevents the power generation units from being operated beyond their safety- and reliabilty-limits.

[0051] The control systems should often include a mechanism that allows for highly-adjustable variable speed drive settings. This adjustability is sometimes critical, since the load on the pumpers is also highly variable, based on required fracturing forces that may be occuring thousands of feet away from the pumpers themselves. As an example, the variable speed drive mechanisms, sometimes referred to as adjustable speed drives (ASD's), allow for ramping up power and ramping down power in starting and stopping stages, respectively. Moreover, VSD/ASD mechanisms as applied to the present invention are also capable of delivering relatively short bursts (e.g., about several seconds to several minutes) of high-torque power, e.g., if the fracturing fluid streams encounter challenging rock and sand conditions.

[0052] The present invention has been described in terms of some specific embodiments. They are intended for illustration only, and should not be construed as being limiting in any way. Thus, it should be understood that modifications can be made thereto, which are within the scope of the invention and the appended claims. Furthermore, all of the patents, patent

applications, articles, and texts which are mentioned above are incorporated herein by reference.

What is claimed:

1. A hydraulic fracturing system, comprising

a) an electric motor-driven pumping sub-system, configured to pump a pressurized fracturing fluid into at least one wellbore, under high pressure conditions sufficient to increase the downhole pressure of the wellbore, to exceed that of the fracture gradient of the solid matter surrounding the wellbore; and

b) an electric power generation sub-system that provides energy to the pumping sub-system, comprising a multitude of electric motors that are powered by a single electrical feed source.

2. The fracturing system of claim **1**, wherein the pumping sub-system comprises one or more platforms, and each platform supports one or more pumping units that each comprise at least one pump and at least one electric motor.

3. The fracturing system of claim **2**, wherein each electric motor is configured to provide power for one pump.

4. The fracturing system of claim **2**, wherein each pumping unit comprises two pump-motor sets.

5. The fracturing system of claim **1**, wherein the electrical feed source comprises an electrical feeder that is connected, directly or indirectly, to an electrical transmission line, a power sub-station, a power generation facility, or a dedicated power generation sub-system.

6. The fracturing system of claim **1**, wherein the electrical feed source comprises at least one gas turbine engine.

7. The fracturing system of claim **1**, wherein the electric power generation sub-system is powered by a large generator capable of supplying greater than about 15 MW of power.

8. The fracturing system of claim **7**, where the electric power generation sub-system is further powered by at least one gas engine capable of supplying about 1 MW to about 10 MW of power.

9. The fracturing system of claim **1**, wherein the pumping sub-system comprises at least one variable-frequency drive (VFD).

10. The fracturing system of claim **9**, wherein the variable-frequency drive is configured to control electrical current from the electrical feed source, according to desired parameters.

11. The fracturing system of claim **10**, wherein the variable-frequency drive is configured to direct the electrical current to at least one designated pumping unit.

12. A process for extracting hydrocarbons from a reservoir rock formation by a hydraulic fracturing operation, comprising the step of introducing a hydraulic fracturing treatment fluid into a subterranean formation at a pressure sufficient to form or to enhance at least one fracture within the subterranean formation,

wherein the fracturing treatment fluid is pumped into at least one wellbore in the subterranean formation by an electric motor-driven pumping sub-system, configured to pump the fluid into the wellbore under high pressure conditions sufficient to increase the downhole pressure of the wellbore, to exceed that of the fracture gradient of the solid matter surrounding the wellbore; and

wherein the pumping sub-system is energized by an electric power generation sub-system that provides energy to the pumping sub-system, and the power generation sub-system comprises a multitude of electric motors that are powered by a single electrical feed source.

13. The process of claim **12**, wherein the pumping sub-system comprises one or more platforms, and each platform supports one or more pumping units that each comprise at least one pump and at least one electric motor.

14. The process of claim **13**, wherein each electric motor is configured to provide power for one pump.

15. The process of claim **13**, wherein each pumping unit comprises two pump-motor sets.

16. The process of claim **12**, wherein the electrical feed source comprises an electrical feeder that is connected, directly or indirectly, to an electrical transmission line, a power sub-station, a power generation facility, or a dedicated power generation sub-system.

* * * * *