UNITED STATES PATENT AND TRADEMARK OFFICE

BEFORE THE PATENT TRIAL AND APPEAL BOARD

PHILIP MORRIS PRODUCTS, S.A.,
Petitioner,

v.

RAI STRATEGIC HOLDINGS, INC.,
Patent Owner.

IPR2020-01602
Patent 9,901,123 B2

Before JO-ANNE M. KOKOSKI, ELIZABETH M. ROESEL, MICHELLE N. ANKENBRAND, *Administrative Patent Judges.*

KOKOSKI, *Administrative Patent Judge*.

DECISION
Granting Institution of *Inter Partes* Review
35 U.S.C. § 314

I. INTRODUCTION

Philip Morris Products, S.A. ("Petitioner") filed a Petition to institute an *inter partes* review of claims 1–7, 9, 11–19, 21, and 23–26 (the "challenged claims") of U.S. Patent No. 9,901,123 B2 ("the '123 patent," Ex. 1001). Paper 2 ("Pet."). RAI Strategic Holdings, Inc. ("Patent Owner") filed a Preliminary Response. Paper 6 ("Prelim. Resp."). With Board authorization, Petitioner filed a reply limited to the issue of discretion to deny institution pursuant to *Apple Inc. v. Fintiv, Inc.*[1] ("Reply," Paper 7), and Patent Owner filed a Sur-reply ("Sur-Reply," Paper 8).

Institution of an *inter partes* review is authorized by statute when "the information presented in the petition . . . and any response . . . shows that there is a reasonable likelihood that the petitioner would prevail with respect to at least 1 of the claims challenged in the petition." 35 U.S.C. § 314 (2018); *see* 37 C.F.R. § 42.4 (2020). Upon consideration of the Petition, the Preliminary Response, the Reply, the Sur-Reply, and the evidence of record, we determine that Petitioner has established a reasonable likelihood of prevailing with respect to the unpatentability of at least 1 claim of the '123 patent, and we decline to exercise our discretion to deny institution. Accordingly, for the reasons that follow, we institute an *inter partes* review of claims 1–7, 9, 11–19, 21, and 23–26 of the '123 patent.

A. Real Parties-in-Interest

Petitioner identifies Philip Morris Products, S.A., Philip Morris International, Inc., Altria Client Services LLC, and Philip Morris USA as the real parties-in-interest. Pet. 75. Patent Owner identifies RAI strategic

[1] *Apple Inc. v. Fintiv, Inc.*, IPR2020-00019, Paper 11 (PTAB Mar. 20, 2020) (precedential) ("Fintiv").

Holdings, Inc., R.J. Reynolds Vapor Company, RAI Innovations Company, and R.J. Reynolds Tobacco Company as the real parties-in-interest. Paper 4, 1.

B. Related Proceedings

The parties indicate that the '123 patent is involved in the following proceedings: (1) *RAI Strategic Holdings, Inc. v. Altria Client Services LLC*, No. 1:20-cv-00393-LO-TCB (E.D. Va.), and (2) *Certain Tobacco Heating Articles and Components Thereof*, U.S. International Trade Commission, Investigation No. 337-TA-1199. Pet. 75–76; Paper 4, 2. The parties further indicate that the '123 patent is the subject of IPR2020-00919 (institution denied on November 16, 2020), also filed by Petitioner. Pet. 76; Paper 4, 1.

C. The '123 Patent

The '123 patent is titled "Tobacco-Containing Smoking Article," and relates to smoking articles "that produce aerosols incorporating components derived from, or provided by, tobacco," where the aerosols "are not necessarily produced as a result of burning of tobacco." Ex. 1001, code (54), 4:45–49. Instead, the smoking articles produce such aerosols "as a result of the application of heat upon tobacco or materials that are in contact with tobacco." *Id*. at 4:49–52. The '123 patent explains that the smoking articles "produce visible aerosols that are 'smoke-like' in nature, and exhibit many of the sensory characteristics associated with those types of smoking articles that burn tobacco." *Id*. at 4:52–55.

Figure 1 of the ’123 patent is reproduced below.

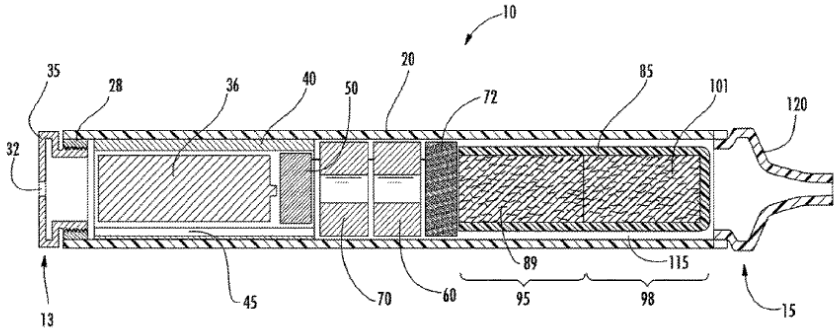

FIG. 1

Figure 1 depicts a longitudinal cross-sectional view of one embodiment of an electrically powered, tobacco-containing smoking article. Ex. 1001, 8:31–32. Smoking article 10 includes outer housing 20 that is “generally tubular in shape,” and includes distal end 13 and mouth-end 15. *Id*. at 19:44–49. Control components 50 and sensor 60 are “preferably part of a puff-actuated controller adapted for regulating current flow through one or more of the” heating elements. *Id*. at 20:63–67. Resistance heating elements 70, 72 are powered by electric power source 36, controlled by electrically powered control components 50, and configured to allow airflow therethrough. *Id*. at 21:22–27. Second resistance heating unit 72 “can be formed from relatively high surface area absorbent or wicking-type materials,” or

> can be employed in close proximity to an absorbent wicking material such that aerosol-forming material can be wicked or otherwise transferred so as to contact the second resistance element or contact an area in close proximity to the second resistance element (e.g., a region that is exposed to a the [*sic*] heat produced by the second resistance element).

Id. at 21:31–45. Smoking article 10 also includes cartridge 85 that contains tobacco 89 and an aerosol-forming material "in the form of an intimate mixture or provided in separate regions." *Id*. at 22:2–6.

The '123 patent explains that, during use, "[a]ir is drawn through the air passageways or openings 32 in the cap 35 located at the distal end 13 . . . and into the outer container 20." *Id*. at 24:20–23. The "[d]rawn air passes through air passageway 45 that extends along the length of the power source 36 and the electronic controls components 50," through an air passageway area within first heating element 70, through air flow sensing region 60, past or through second heating element 72, through an air passageway that extends along the length of cartridge 85, and into mouth-end piece 120. *Id*. at 24:23–30. The heating elements provide surface region temperatures, and have the ability to heat the tobacco and aerosol-forming materials "in surrounding regions in the vicinity of those heating elements." *Id*. at 24:30–33. Aerosol is formed by the action of the drawn air passing the heated tobacco and aerosol-forming materials in the region of heating element 72. *Id*. at 24:39–41.

D. Illustrative Claim

Petitioner challenges claims 1–7, 9, 11–19, 21, and 23–26 of the '123 patent. Pet. 1, 3. Claims 1 and 15 are the only independent challenged claims. Claim 1 is illustrative of the claimed subject matter, and is reproduced below.

> 1. An electrically-powered, aerosol-generating smoking article comprising:
>
> [a] an electrical power source within a tubular outer housing having a mouth-end and an end distal to the mouth end;

> [b] at least one electrical resistance heater powered by said electrical power source;
>
> [c] a puff-actuated controller within the tubular outer housing and adapted for regulating current flow through the electrical resistance heater during draw, the controller comprising a sensor adapted for sensing draw on the smoking article by a user; and
>
> [d] a rod-shaped carrier device engaged with the mouth-end of the tubular outer housing and comprising a cartridge providing a liquid storage compartment containing a mixture comprising a tobacco extract and an aerosol-forming material absorbed within an absorbent fibrous material, the cartridge having a generally tubular shape and adapted for airflow therethrough;
>
> [e] wherein the rod-shaped carrier devise is operatively positioned such that, during draw, the mixture comprising the tobacco extract and the aerosol-forming material can be wicked into contact with the electrical resistance heater and volatilized to produce a visible mainstream aerosol incorporating tobacco components or tobacco-derived components that can be drawn into the mouth of the user of the smoking article.

Ex. 1001, 32:50–33:8 (bracketed labeling designated by Petitioner; *see* Pet. 18 n.3, App'x (Claim Listing)).

E. The Asserted Grounds of Unpatentability

Petitioner asserts that the challenged claims are unpatentable on the following grounds:

Claims Challenged	35 U.S.C.	References/Basis
1, 2, 5, 7, 9, 11, 12, 14, 15, 18, 21, 23–26	§ 103	Hon,[2] Brooks,[3] Whittemore[4]
3, 4, 13, 16, 17	§ 103	Hon, Whittemore, Brooks, Susa[5]
6, 19	§ 103	Hon, Whittemore, Brooks, Ray[6]

Pet. 3. Petitioner relies on the Declaration of Stewart Fox ("the Fox Declaration," Ex. 1003) in support of its contentions.

II. ANALYSIS

A. Level of Ordinary Skill in the Art

Petitioner contends that a person having ordinary skill in the art ("POSA") "would have had a Bachelor's degree in mechanical engineering, electrical engineering, chemistry, or physics, or a related field, and three to four years of industry experience," or a Master's degree in the same fields with "one to two years of industry experience." Pet. 9–10. Petitioner further contends that "[s]uch a POSA would have been familiar with electrically powered smoking articles and/or the components and underlying technology used therein." *Id*. at 10 (citing Ex. 1003 ¶¶ 13–18). Patent Owner states that

---

[2] Chinese Patent No. CN 2719043 Y, published Aug. 24, 2005 (Ex. 1005, 1–13 (English translation), 16–28 (original Chinese), "Hon" or "Hon '043"). Petitioner provides an affidavit attesting to the accuracy of the translation. Ex. 1005, 14–15; *see* 37 C.F.R. § 42.63(b).
[3] U.S. Patent No. 4,947,874, issued Aug. 14, 1990 (Ex. 1006, "Brooks").
[4] U.S. Patent No. 2,057,353, issued Oct. 13, 1936 (Ex. 1007, "Whittemore").
[5] European Pat. Pub. No. EP 0845220 B1, published Sept. 3, 2003 (Ex. 1008, "Susa").
[6] U.S. Patent No. 4,284,089, issued Aug. 18, 1981 (Ex. 1009, "Ray").

it "accepts Petitioner's definition" but "reserves the right to dispute this definition if trial is instituted." Prelim. Resp. 17. For purposes of this Decision, we adopt Petitioner's proposed definition, which is consistent with the level of skill in the art at the time of the invention as reflected in the prior art in this proceeding. *See Okajima v. Bourdeau*, 261 F.3d 1350, 1355 (Fed. Cir. 2001) (explaining that specific findings regarding ordinary skill level are not required "where the prior art itself reflects an appropriate level and a need for testimony is not shown" (quoting *Litton Indus. Prods., Inc. v. Solid State Sys. Corp.*, 755 F.2d 158, 163 (Fed. Cir. 1985))).

B. Claim Construction

We construe each claim "in accordance with the ordinary and customary meaning of such claim as understood by one of ordinary skill in the art and the prosecution history pertaining to the patent." 37 C.F.R. § 42.100(b) (2019). Under this standard, claim terms are generally given their plain and ordinary meaning as would have been understood by a person of ordinary skill in the art at the time of the invention and in the context of the entire patent disclosure. *Phillips v. AWH Corp.*, 415 F.3d 1303, 1313 (Fed. Cir. 2005) (en banc). Only those terms in controversy need to be construed, and only to the extent necessary to resolve the controversy. *See Nidec Motor Corp. v. Zhongshan Broad Ocean Motor Co.*, 868 F.3d 1013, 1017 (Fed. Cir. 2017) (quoting *Vivid Techs., Inc. v. Am. Sci. & Eng'g, Inc.*, 200 F.3d 795, 803 (Fed. Cir. 1999)).

Neither party proposes an explicit construction for any claim term. *See* Pet. 10 (asserting that the prior art discloses the claimed subject matter "under any reasonable construction"); Prelim. Resp. 18 (asserting that its reasons for denial of institution "do not require addressing the construction

of claim terms"). For purposes of this Decision, based on the record before us, we determine that none of the claim terms requires an explicit construction.

C. Discretionary Denial Under 35 U.S.C. § 314(a)

Institution of an *inter partes* review under 35 U.S.C. § 314(a) is discretionary. *See* 35 U.S.C. § 314(a) (stating "[t]he Director *may not* authorize an *inter partes* review to be instituted unless the Director determines that the information presented in the petition . . . shows that there is a reasonable likelihood that the petitioner would prevail with respect to at least 1 of the claims challenged in the petition" (emphasis added)); *Cuozzo Speed Techs., LLC v. Lee*, 136 S. Ct. 2131, 2140 (2016) ("[T]he agency's decision to deny a petition is a matter committed to the Patent Office's discretion."); *SAS Inst. Inc. v. Iancu*, 138 S. Ct. 1348, 1356 (2018) ("[Section] 314(a) invests the Director with discretion on the question whether to institute review . . . ." (emphasis omitted)); *Harmonic Inc. v. Avid Tech., Inc.*, 815 F.3d 1356, 1367 (Fed. Cir. 2016) ("[T]he PTO is permitted, but never compelled, to institute an IPR proceeding.").

Patent Owner argues that we should deny the Petition in view of the parallel ITC investigation involving the '123 patent. Prelim. Resp. 18–26. Patent Owner asserts that an evidentiary hearing in the ITC was scheduled to occur "just weeks" after Patent Owner filed its Preliminary Response, and that the ITC's final determination will pre-date any Final Written Decision in this proceeding by seven months. *Id*. at 19.

Patent Owner further notes that a different set of claims of the '123 patent was the subject of IPR2020-00919, also filed by Petitioner, in which review was discretionarily denied "in view of the parallel ITC proceeding."

Id. at 18 (citing *Philip Morris Products, S.A. v. RAI Strategic Holdings, Inc.*, IPR2019-00919, Paper 9 at 6–13 (PTAB November 16, 2020) ("919 Decision" or "919 IPR")). Patent Owner argues that "Petitioner could have filed this Petition at the same time as Petitioner's first Petition or even combined them into a single Petition," and, had Petitioner done so, "it is a near certainty that the Board would have denied institution of the challenges raised in this Petition." *Id*. Patent Owner argues that "the considerations that led the Board to deny institution on the first Petition on the '123 patent apply equally, if not more so, to this Petition." *Id*.

Fintiv identifies the following factors that the Board should consider and balance when the patent owner raises an argument for discretionary denial due to an earlier trial date:

1. whether the court granted a stay or evidence exists that one may be granted if a proceeding is instituted;
2. proximity of the court's trial date to the Board's projected statutory deadline for a final written decision;
3. investment in the parallel proceeding by the court and the parties;
4. overlap between issues raised in the petition and in the parallel proceeding;
5. whether the petitioner and the defendant in the parallel proceeding are the same party; and
6. other circumstances that impact the Board's exercise of discretion, including the merits.

Fintiv, Paper 11 at 5–6. According to *Fintiv*, these factors relate to "efficiency, fairness, and the merits" and require the Board to take "a holistic view of whether efficiency and integrity of the system are best

served by denying or instituting review." *Id.* at 6. Our analysis of the *Fintiv* factors is set forth below.

We determine that the facts of this case as they pertain to *Fintiv* factors 1, 2, and 5 are not significantly different from the facts presented in the 919 IPR, and our analysis of these factors is essentially the same as set forth in the 919 Decision. Therefore, we incorporate by reference the Analysis section of the 919 Decision as it pertains to *Fintiv* factors 1, 2, and 5. 919 IPR, Paper 9 at 8–9, 12. Specifically, in the 919 Decision, we determined that factor 1 "neither weighs in favor of or against discretionary denial," factor 2 "weighs in favor of exercising discretion to deny institution," and factor 5 "weighs in favor of exercising our discretion to deny institution." *Id*. We address *Fintiv* factors 3, 4, and 6 below.

1. Fintiv Factor 3: Investment in Proceedings

Patent Owner argues that "[t]he parties will have completed all pre-hearing events *and* the ITC trial more than two months before the April 2021 institution decision deadline." Prelim. Resp. 22 (citing Ex. 2002, 2–4); *see also* Sur-Reply 4 ("All aspects of the ITC proceedings are nearly complete."). Patent Owner also argues that "the entirety of the ITC proceedings—including the ALJ's investment in his decision and the Commission's investment in reaching its decision—will all be complete by September 2021." Sur-Reply 4. In this case, the evidence shows that the parties and the ITC have invested significant work in the ITC proceeding. This fact favors denial of institution. *Fintiv*, Paper 11 at 9–10.

Under this factor, we also analyze whether the evidence shows that the petitioner filed the petition expeditiously, such as promptly after becoming aware of the asserted claims. *Fintiv*, Paper 11 at 11. Petitioner

contends that "[j]ust five months after being accused of infringement, Petitioner is diligently filing this Petition—after having filed a half-dozen petitions challenging the asserted claims in six patents." Pet. 72. Petitioner contends that "this petition does not challenge claims that Petitioner was accused of infringing," and instead "it challenges the '123 patent's 'Domestic Industry' claims, i.e., the claims that Patent Owner asserts that [Patent Owner] practices by selling its 'Vuse Vibe' vaping device." *Id*. (citing Ex. 1016). Under these circumstances, we find no unreasonable delay in Petitioner's filing, and determine that this fact is neutral.

Accordingly, in contrast to the 919 Decision, we find that the parties have invested sufficient time and effort in the ITC proceeding to favor denial, and that *Fintiv* factor 3 weighs in favor of exercising our discretion to deny institution. *Fintiv*, Paper 11 at 10.

2. Factor 4: Overlap of Issues

Petitioner contends "that there is zero overlap between this IPR and any other proceeding." Reply 1 (emphasis omitted). Petitioner contends that "[t]he ITC will not even consider the validity of the challenged claims because Petitioner dropped that issue from the ITC case." *Id*. at 5 (emphasis omitted) (citing Ex. 1039). According to Petitioner, "this factor weighs even more heavily in favor of institution than a *Sotera*-style stipulation because, outside of this IPR, the validity of the challenged claims will not be adjudicated at all." *Id*. (citing *Philip Morris Products, S.A. v. RAI Strategic Holdings, Inc.*, IPR2020-01094, Paper 9 at 21–23 (PTAB Jan. 25, 2021)).

In its Sur-Reply, Patent Owner admits that there is no overlap, but argues that Petitioner's narrowing of "its invalidity defense in the ITC in the middle of the ITC trial, mere days before filing its Reply," is "pure and utter

gamesmanship" and "violates the spirit, if not the rule of *Fintiv* factor 4." Sur-Reply 4–5. Patent Owner also argues that "Petitioner makes no stipulation at all, much less a narrow stipulation that it will not pursue, in any court, any ground raised or that could have been raised in an IPR." *Id*. at 6 (citing *Sotera Wireless, Inc. v. Masimo Corp.*, IPR2020-01019, Paper 12 at 18–19 (PTAB Dec. 1, 2020) (precedential as to Section II.A.)).

Fintiv factor 4 evaluates "concerns of inefficiency and the possibility of conflicting decisions" when substantially identical prior art is submitted in both proceedings. *Fintiv*, Paper 11 at 12. "[I]f the petition includes the same or substantially the same claims, grounds, arguments, and evidence as presented in the parallel proceeding, that fact has favored denial." *Id*. "Conversely, if the petition includes materially different grounds, arguments, and/or evidence than those presented in the district court, this fact has tended to weigh against exercising discretion to deny institution." *Id*. at 12–13.

The record before us establishes that, in the ITC proceeding, Petitioner's prior art invalidity grounds are asserted against different claims based on different prior art (Morgan, Counts-962, Adams, Park), and Petitioner is no longer contesting the validity of the challenged claims. Ex. 1039. Petitioner's decision to limit its ITC invalidity case to claims and grounds that are not at issue in this proceeding mitigates to some degree concerns of duplicative efforts between the ITC and the Board, and mitigates any concerns about potentially conflicting decisions. Petitioner's decision ensures that an *inter partes* review is a "true alternative" to the ITC proceeding. *Sotera*, Paper 12 at 19.

That Petitioner limited its invalidity case during the ITC hearing does not change this conclusion. We recognize that the parties have expended

significant resources litigating the case in the ITC, and we have taken that investment into account in our evaluation of *Fintiv* factor 3. Although we acknowledge that the parties and the ITC staff attorney's office expended resources on overlapping invalidity issues leading up to the hearing, the result of Petitioner's decision to narrow its contentions is that the ITC will not consider the validity of the challenged claims, and the ITC proceeding will not resolve this dispute between the parties.

Accordingly, in contrast to the 919 Decision, we determine that, due to the lack of overlap between the claims and issues now being raised in the ITC proceeding and the Petition, *Fintiv* factor 4 weighs strongly against exercising our discretion to deny institution.

3. Fintiv Factor 6: Other Circumstances, Including the Merits

Patent Owner argues that "the Petition lacks merit on all proposed grounds and thus the merits of the Petition are not 'particularly strong.'" Prelim. Resp. 23 (quoting *Fintiv*, Paper 11 at 14) (emphasis omitted). Petitioner responds that "[t]he petition's strong merits also favor institution." Reply at 5. For the reasons explained below, we find that the merits of this case are strong and weigh in favor of Petitioner on the evidence presented thus far. *See* Section II.D, *infra*. Accordingly, in contrast to the 919 Decision, we find that *Fintiv* factor 6 weighs against exercising our discretion to deny institution.

4. Balancing the Fintiv Factors

Fintiv requires that we take "a holistic view of whether efficiency and integrity of the system are best served by denying or instituting review." *Fintiv*, Paper 11 at 6. Applying this approach, we determine that the facts of this case, particularly with respect to *Fintiv* factors 4 and 6, justify a

different result than in the 919 IPR. More particularly, we determine that, on balance, Petitioner's decision to limit its ITC invalidity case to claims and grounds that are not asserted in the Petition, and the strength of the Petition on the merits, outweigh the investment to date in the ITC proceeding, where the ITC proceeding involves the same parties and the same patent. Accordingly, we decline to exercise our discretion to deny the Petition pursuant to 35 U.S.C. § 314(a).

D. Obviousness over Hon, Brooks, and Whittemore

Petitioner contends that the subject matter of claims 1, 2, 5, 7, 9, 11, 12, 14, 15, 18, 21, and 23–26 of the '123 patent would have been obvious over Hon alone, or over the combined teachings of Hon, Brooks, and Whittemore. Pet. 10–62. Petitioner relies on the Fox Declaration in support of its contentions. *Id.*

1. Overview of Hon

Hon is directed to an electronic atomization cigarette. Ex. 1005, 4. Figure 1 of Hon is reproduced below:

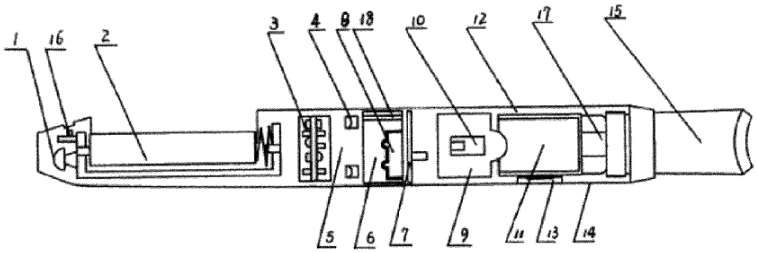

FIG. 1

Figure 1 is a schematic diagram of the structure of an electronic cigarette. *Id.* at 5. Hon teaches "a mouthpiece-shaped, cigar-shaped, or a pipe-shaped body" that includes battery 2, air inlet 4, normal pressure cavity 5, sensor 6, vapor-liquid separator 7, atomizer 9, liquid-supplying bottle 11, and mouthpiece 15 "set successively in the enclosure 14." *Id.* at 6.

Hon's Figure 6 is reproduced below.

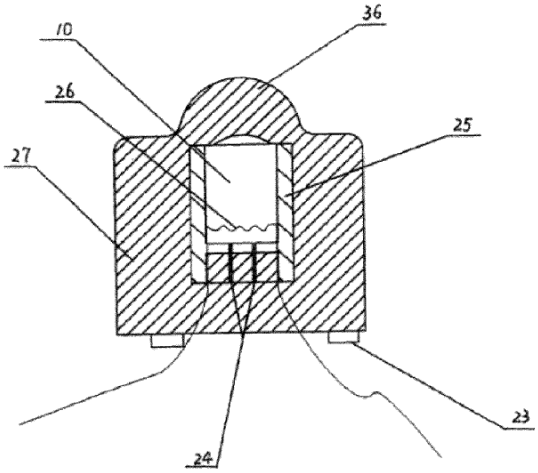

FIG. 6

Figure 6 is a structural diagram of an atomizer that includes atomization cavity 10, long stream ejection hole 24, atomization cavity wall 25, heating element 26, porous body 27, and bulge 36. *Id.* at 5–6. Hon teaches that "porous body 27 is wrapped around the atomization cavity wall 25" and "may be made of nickel foam, stainless steel fiber felt, high molecular polymeric foam, and ceramic foam." *Id.* "[A]tomization cavity wall 25 may be made of alumina or ceramic." *Id.*

Hon teaches that "[w]hen a smoker smokes, the mouthpiece 15 is under negative pressure[,] the air pressure difference or high-speed stream between the normal pressure cavity 5 and the negative pressure cavity 8 will cause the sensor 6 to output an actuating signal," which causes the cigarette to begin operating. *Id.* at 6. Air enters normal pressure cavity 5 through air inlet 4, proceeds through the through hole in vapor-liquid separator 7, and flows into atomization cavity 10 in atomizer 9. *Id.* at 7. The solution in porous body 27 is driven by a high speed airflow passing through ejection hole 24 and ejected in the form of droplets into atomization cavity 10. The

solution "is atomized ultrasonically by the first piezoelectric element 23 and is further atomized under the effect of heating element 26." *Id.* After atomization, large-diameter droplets are attached to the wall and reabsorbed by porous body 27 via overflow hole 29, and small-diameter droplets form an aerosol that is sucked out via aerosol passage 12, gas vent 17, and mouthpiece 15. *Id.* According to Hon, liquid storing porous body 28 in liquid-supplying bottle 11 is in contact with bulge 36 on atomizer 9 "to realize the solution supply via capillary infiltration." *Id.*; *see also id.* at 6, Fig. 11 (showing and describing porous body 28 in liquid-supplying bottle 11).

2. Overview of Brooks

Brooks relates to cigarettes and other smoking articles that "employ an electrical resistance heating element and an electrical power source to produce a tobacco-flavored smoke or aerosol." Ex. 1006, 1:6–10. Brooks teaches that the smoking articles "are capable of providing the user with the sensations of smoking (e.g., smoking taste, feel, satisfaction, pleasure, and the like), by heating but not burning tobacco, without producing sidestream smoke or odor, and without producing carbon monoxide." *Id*. at 1:11–16. Brooks also describes "a reusable controller which can be used with the cigarettes or disposable portions of the invention, as well as with other resistance heating aerosol producing articles." *Id*. at 4:35–38. This reusable controller includes "a current actuation means, a separate current regulating means to control the temperature of the heating element, and a battery power supply." *Id*. at 4:38–42.

Brooks states that "[p]referably, the current actuation means is puff actuated, so that current flows through the resistance heating element to

produce aerosol only during draw by the user." *Id*. at 4:58–61. Brooks also states that "the current regulating means preferably is based on controlling the time period during which current passes through the resistance element during draw," which, "in turn, controls the temperature experienced by the resistance element and by the aerosol forming substances." *Id*. at 4:64–5:1. Included in the current regulating means is an electrical control circuit that "maximizes initial heating of the heating element, until a desired temperature range for volatilization of the aerosol former and the tobacco flavor substances is reached, usually between about 150º C. and about 350º C." *Id*. at 5:1–6. Brooks teaches that the control circuit "normally maintains the heating element within the desired temperature range during the balance of the puff and/or ensures that the heating element does not overheat during puffing." *Id*. at 5:7–12.

3. Overview of Whittemore

Whittemore is directed to vaporizing units for a therapeutic apparatus. Ex. 1007, 1:1–2. Whittemore Figure 2 is reproduced below:

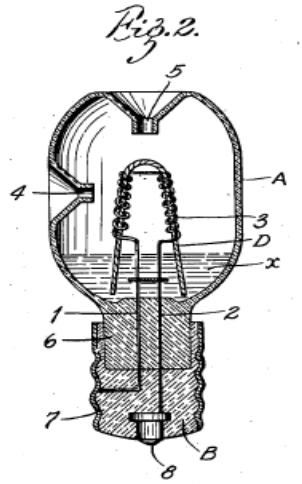

Figure 2 is an enlarged vertical sectional view of a therapeutic apparatus with a vaporizing unit. *Id.* at 1:15–16. Vaporizing vessel A is a hollow

glass container that holds liquid medicament x. *Id.* at 1:19–23. Conductors 1 and 2 are combined with heating element 3 such that, when conductors 1 and 2 are energized, heating element 3 is heated. *Id.* at 1:24–27. Wick D is combined with heating element 3 so that a portion of wick D is always in contact, or in approximate contact, with heating element 3, and a portion of wick D is also in contact with liquid medicament x. *Id.* at 1:53–2:5.

According to Whittemore, medicament x is carried on wick D by capillary action to a point where it will be vaporized by the heat from heating element 3. *Id.* at 2:5–8. Whittemore states that "wick D consists of a thread, string or strand of some suitable wick material doubled intermediate its ends so as to form a substantially inverted V-shaped device whose side portions are encased in and surrounded by coiled or looped portions" of heating element 3, and "the lower ends or free ends of the side pieces of the wick projecting downwardly into the medicament and terminating at or in close proximity to the closed bottom 6 of the vessel." *Id.* at 2:9–18.

4. Analysis

Petitioner asserts, with supporting testimony from Mr. Fox, that claims 1, 2, 5, 7, 9, 11, 12, 14, 15, 18, 21, and 23–26 are unpatentable as having been obvious over Hon, Brooks, and Whittemore. Pet. 17–65. With respect to independent claims 1 and 15, Petitioner contends that Hon, Brooks, and Whittemore disclose:

Preamble: "An electrically-powered, aerosol generating smoking article, comprising:" (Pet. 17–18 (relying on Ex. 1005, code (57), 7–8, Fig. 1; Ex. 1003 ¶¶ 88–89));

Element 1/15[a]: "an electrical power source [in the form of a battery] within a tubular outer housing having a mouth-end and an end distal to the mouth-end;" (Pet. 18–20 (relying on Ex. 1005, 6, Fig. 1; Ex. 1003 ¶¶ 90–95)).

Element 1/15[b]: "at least one electrical resistance heater powered by said electrical power source;" (Pet. 20–22 (relying on Ex. 1005, 5–7, Fig. 6, Fig. 12; Ex. 1007, 1:24–28; Ex. 1003 ¶¶ 96–99));

Element 1/15[c]: "a puff-actuated controller within the tubular outer housing and adapted for regulating current flow through the electrical resistance heater during draw, the controller comprising a sensor adapted for sensing draw on the smoking article by a user; and" (Pet. 22–29 (relying on Ex. 1005, 6–7, Fig. 1, Fig. 12; Ex. 1006, code (57), 1:6–10, 3:63–67, 4:50–5:26, 7:5–7, 7:25–8:23, 9:51–65, 10:42–47, 12:39–16:31, 20:53–21:27 Ex. 1003 ¶¶ 76–80 100–107, 114–117));

Element 1/15[d]: "a rod-shaped carrier device [removably] engaged with the mouth-end of the tubular outer housing comprising a cartridge providing a liquid storage compartment containing a mixture comprising a tobacco extract [comprising nicotine] and an aerosol-forming material [selected from glycerin, propylene glycol, or a mixture thereof, the mixture] absorbed within an absorbent [fibrous material/absorbent wicking material], the cartridge having a generally tubular shape and adapted for airflow therethrough;" (Pet. 29–45 (relying on Ex. 1005, 1, 3, 5–8, Fig. 1, Fig. 11; Ex. 1007, 2:7–25 Ex. 1003 ¶¶ 74, 75, 120–145, 151–153));

Element 1/15[e]: "wherein the rod-shaped carrier device is operatively positioned such that, during draw, the mixture comprising the tobacco extract and the aerosol-forming material can be wicked into contact

with the electrical resistance heater and volatilized to produce a visible mainstream aerosol incorporating tobacco components or tobacco-derived components that can be drawn into the mouth of the user of the smoking article." (Pet. 45–53 (relying on Ex. 1005, 1, 6–7, Fig. 1, Fig. 6; Ex. 1007, 2:21–25; Ex. 1003 ¶¶ 146–168)).

Patent Owner argues in response that Petitioner does not establish that the asserted prior art discloses wicking the tobacco extract and aerosol-forming material mixture into contact with the electrical resistance heater (element 1/15[e]) or a puff-actuated controller (element 1/15[c]) as independent claims 1 and 15 require. We address these arguments in turn below.

a. Element 1/15[e]: "the mixture comprising the tobacco extract and the aerosol-forming material can be wicked into contact with the electrical resistance heater and volatilized"

Petitioner contends that element 1/15[e] "does not require the wick itself to contact the heater, but merely be in proximity to the heater at a location where the liquid may then contact the heater to be volatilized." Pet. 46. In support of this contention, Petitioner points to dependent claims 14 and 24, which recite "wherein the absorbent [fibrous/wicking] material is in contact with the electrical resistance heater," and claim 25, which recites "wherein the absorbent wicking material is positioned in proximity to the at least one electrical resistance heater." *Id*. Accordingly, Petitioner contends that "the wicking requirement in independent claims 1 and 15 is broad enough to capture either situation." *Id*. at 46–47 (citing Ex. 1003 ¶¶ 146–150).

Petitioner contends that Hon teaches "wicking material that is 'positioned in proximity to' the heater and wicks the liquid into contact with

the heater." Pet. 47. Petitioner provides an annotated version of Hon's Figure 6, reproduced below, to illustrate its contentions:

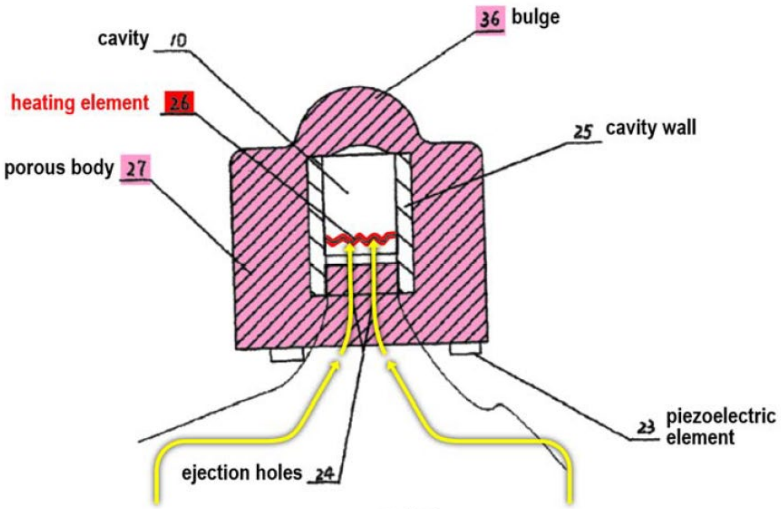

FIG. 6

Id. at 48. Annotated Figure 6 is a structural diagram of an atomizer described in Hon, wherein Petitioner labels each element and highlights heating element 26 in red and porous body 27 in pink. *Id*. at 48. With reference to annotated Figure 6, Petitioner contends that Hon's atomizer wicks the liquid mixture from the liquid-supplying bottle (not shown) to bulge 36 in porous body 27, after which the liquid mixture "is then further wicked around and through the porous body 27 'wrapped around the atomization cavity wall 25' to ejection holes 24." *Id*. at 47–48 (citing Ex. 1005, 6, Fig. 6; Ex. 1003 ¶ 152). Petitioner further contends that, "[d]uring the user's draw, the wicked liquid mixture contacts the heating element" when the solution in porous body 27 is driven by high speed airflow and ejected in the form of droplets into atomization cavity 10, "where it contacts 'heating element 26' and is volatilized." *Id*. at 48 (citing Ex. 1005, 7; Ex. 1003 ¶ 153).

Patent Owner responds that, "[r]egardless of the positioning of the absorbent fibrous material—whether in proximity to the heater or in contact with the heater—the claim still requires that the liquid itself be wicked into contact with the heater." Prelim. Resp. 28. Patent Owner argues that none of the wicking materials in Hon "wicks the mixture *into contact* with the electrical resistance heater." *Id*. at 28–29. Instead, Patent Owner argues, "the liquid is wicked out of the cartridge and into the porous body, and from there the liquid is delivered to the heater via *airflow, not wicking*." *Id*. at 29 (citing Ex. 1003 ¶¶ 152–153). Patent Owner also argues that Petitioner's declarant, Mr. Fox, does not "affirmatively state that Hon '043 actually wicks the liquid into contact with the heater," but instead "states that 'Hon's atomizer relies on the user's draw to carry droplets of the liquid mixture from the ejection holes to the heater inside of the atomizer cavity.'" *Id*. at 30 (quoting Ex. 1003 ¶ 106).

On this record, we find that Petitioner sufficiently shows that Hon discloses "during draw, the mixture comprising the tobacco extract and the aerosol-forming material can be wicked into contact with the electrical resistance heater and volatilized," as claims 1 and 15 recite. First, we agree with Petitioner that claims 1 and 15 do not require that the absorbent fibrous or wicking material contact the heater. As Petitioner points out, claim 14, which depends from claim 1, and claim 24, which depends from claim 15, require that the absorbent fibrous or wicking material be in contact with the electrical resistance heater. Pet. 46–47; Ex. 1001, 33:38–40, 34:23–25. Claim 25, which also depends from claim 15, requires that the "wicking material is positioned in proximity to the at least one electrical resistance heater." Pet. 46; Ex. 1001, 34:26–28. Because these claims are narrower

than the independent claims from which they depend, independent claims 1 and 15 necessarily encompass smoking articles in which absorbent fibrous or wicking material is either in contact with the heater or is in proximity to the heater.

Hon teaches that the contact between liquid storing porous body 28 in liquid-supplying bottle 11 and bulge 36 on atomizer 9 causes the liquid to wick into porous body 27 on atomizer 9. Ex. 1005, 7. Hon also teaches that, during draw, the liquid wicked into porous body 27 is driven by the high-speed airflow of ejection hole 24 and ejected as droplets into atomization cavity 10, where it is "atomized under the effect of the heating element 26." *Id*. The small diameter droplets then "suspend in the airflow and form an aerosol." *Id*. Therefore, based on the current record, we find that Hon teaches wicking material (porous body 27) in close proximity to the heater (heating element 26), wherein liquid is wicked into contact with the heater through ejection hole 24 when air is drawn through the smoking article.

We disagree with Patent Owner's argument that, because the liquid in Hon comes into contact with the heater due to airflow during draw, the liquid is not "wicked into contact" with the heater. As set forth above, claims 1 and 15 of the '123 patent encompass the placement of the absorbent fibrous or wicking material in proximity to the heater. In that regard, the '123 patent teaches that heating element 72

> can be employed in close proximity to an absorbent wicking material such that aerosol-forming material can be wicked or otherwise transferred so as to contact the second resistance element or contact an area in close proximity to the second resistance element (e.g., a region that is exposed to a the [*sic*] heat produced by the second resistance element).

Ex. 1001, 21:39–45. The ’123 patent, however, does not provide any additional detail as to how the liquid can be “wicked into contact” with the heater when the absorbent wicking material is in close proximity to, and not in contact with, the heater. Because the ’123 patent teaches that liquid can be wicked into contact with the heater from absorbent fibrous or wicking material that is in close proximity to the heater, we are persuaded that Petitioner sufficiently establishes that Hon discloses element [e] of independent claims 1 and 15. This determination is preliminary in nature and based on the record at this stage of the proceeding. The parties are encouraged to develop these arguments further at trial, to the extent permitted under our rules. In particular, we encourage the parties to address Patent Owner’s assertion that Hon’s device does not wick the mixture into contact with the electrical resistance heater.

Petitioner also contends that the combination of Hon and Whittemore teaches “the wicking material itself ‘is in contact with’ the heater.” Pet. 47. In particular, Petitioner contends that “it would have been obvious to replace Hon’s complicated atomizer with a simple heater/wick design as taught by Whittemore (Ex. 1007), thus wicking the liquid directly to the heater to volatilize Hon’s mixture and generate the aerosol.” *Id*. at 50. Petitioner contends Whittemore teaches that a liquid mixture is carried on a wick by capillary action to a point where it will be vaporized by the heat from the heating element that is wrapped around the wick. *Id*. Petitioner contends that a POSA would have been motivated to replace Hon’s “complicated piezoelectric atomizer with a simpler and cheaper heater and wick (such as Whittemore’s) to reduce design costs and effort, reduce manufacturing costs

including parts and assembly, increase reliability, and increase the expectation of success." *Id*. at 51–52 (citing Ex. 1003 ¶¶ 158–168).

Patent Owner argues that a POSA would not have been motivated to modify Hon to include Whittemore's heater/wick design. Prelim. Resp. 32. Patent Owner argues that Petitioner does not provide any evidence for the assertion that Whittemore's heater/wick design is simpler and cheaper and would reduce costs. *Id*. at 33 (citing Pet. 51–52). Patent Owner also argues that "Mr. Fox does not explain how or why the Whittemore design would have been any better than Hon '043." *Id*. at 34 (citing Ex. 1003 ¶¶ 155–158). In that regard, Patent Owner notes that Hon teaches that the first piezoelectric element is optional, and, "even if a POSA would have been motivated to simplify the Hon '043 device, a POSA would have understood that she could have just removed the piezoelectric element and continued to use the same or a slightly smaller atomizer." *Id*. at 34.

On this record, we are not persuaded that Petitioner sufficiently establishes why a POSA would have attempted to modify Hon's device by looking to Whittemore. As Patent Owner notes, Hon itself teaches that the device can be simplified by removing the first piezoelectric element in the atomizer to reduce the size of the atomizer. Prelim Resp. 34; Ex. 1005, 7. Hon also teaches that both the first piezoelectric element and the heating element can be removed, and "a single-layer or multi-layer, flat second piezoelectric element" can be added in the atomization cavity such that "the airflow via the ejection hole vibrates the focal point at its center to realize atomization." Ex. 1005, 7.

Petitioner concedes that removing Hon's piezoelectric element would also eliminate its associated circuitry, thereby "reducing cost and

complexity." Pet. 52. But Petitioner goes on to argue that, in addition to ensuring that a sufficient amount of liquid is volatilized by the heater after the removal of the piezoelectric element, a POSA would have "further simplified" Hon's design by replacing Hon's atomizer with Whittemore's wick and heater. *Id*. (citing Ex. 1003 ¶¶ 159–168). The Petition does not adequately explain, however, why a POSA would have made further modifications to Hon's device by replacing Hon's atomizer with Whittemore's wick and heater.

Additionally, neither Petitioner nor Mr. Fox provide objective evidence to support the assertion that Whittemore's wick and heater is "simpler and cheaper" than Hon's atomizer, or that using Whittemore's wick and heater in Hon would have reduced design and manufacturing costs, increased reliability, or increased the expectation of success. Petitioner's analysis, and the cited testimony of Mr. Fox, provide insufficient reasoning as to why a POSA would have combined the teachings of Hon and Whittemore as Petitioner proposes.

Petitioner also points to the Board's decision in IPR2016-01268 to support Petitioner's contention that replacing Hon's atomizer with Whittemore's wick and heater "would have been a simple substitution." *Id*. at 53 (citing *R.J. Reynolds Vapor Co. v. Fontem Holdings 1 B.V.*, IPR2016-01268, Paper 63 at 17–18 (PTAB Dec. 19, 2017) ("the 1268 Decision," Ex. 1022)). In the 1268 Decision, the Board evaluated the combination of Hon and Whittemore with respect to different claims of a different, unrelated patent. The Board determined that the petitioner did not adequately explain why replacing the heater in Hon's atomizer with Whittemore's wire-wrapped wick, while also retaining Hon's porous body, was a simple

substitution, relying on credible testimony from the patent owner's declarant that Whittemore's wick performs the same function as Hon's porous body. Ex. 1022, 18. In that regard, the Board credited the patent owner's contention, supported with the declarant's testimony, that removing Hon's entire atomizer and replacing it with Whittemore's wire-wrapped wick would have been a simple substitution, over the petitioner's insufficiently supported contentions. *Id*. at 17. At the same time, the Board credited the patent owner's declarant's testimony that "if the porous body 27 and the heating wire 26 of Hon '043 are removed in making the modification, then the atomizer of Hon '043 is entirely discarded and replaced *with something else having little relation to the atomizer disclosed in Hon '043*." *Id.* at 18 (emphasis added). The italicized testimony is applicable to Petitioner's contention here. We find that Whittemore's wire-wrapped wick has little relation to the atomizer disclosed in Hon and that Petitioner has not shown sufficiently how or why Petitioner's proposed substitution would improve Hon's electronic atomization cigarette.

Accordingly, on the record before us, we are persuaded that Petitioner's discussion of the particular structures in Hon, and the explanations in the Petition and the Fox Declaration, sufficiently show that Hon discloses "during draw, the mixture comprising the tobacco extract and the aerosol-forming material can be wicked into contact with the electrical resistance heater and volatilized," as element 1/15[e] of claims 1 and 15 recites. We are not persuaded, however, that the Petition demonstrates a sufficient rationale for combining the teachings of Hon and Whittemore for element 1/15[e] of claims 1 and 15.

b. Element 1/15[c]: "a puff-actuated controller within the tubular outer housing and adapted for regulating current flow through the electrical resistance heater during draw, the controller comprising a sensor adapted for sensing draw on the smoking article by a user"

Referring to an annotated version of Hon's Figure 1, reproduced below, Petitioner contends that Hon's device "includes a puff-actuated controller (on 'electronic circuit board 3') with a sensor adaptor for sensing draw ('sensor 6') (both orange) within a tubular outer housing ('enclosure 14,' gray)." Pet. 23.

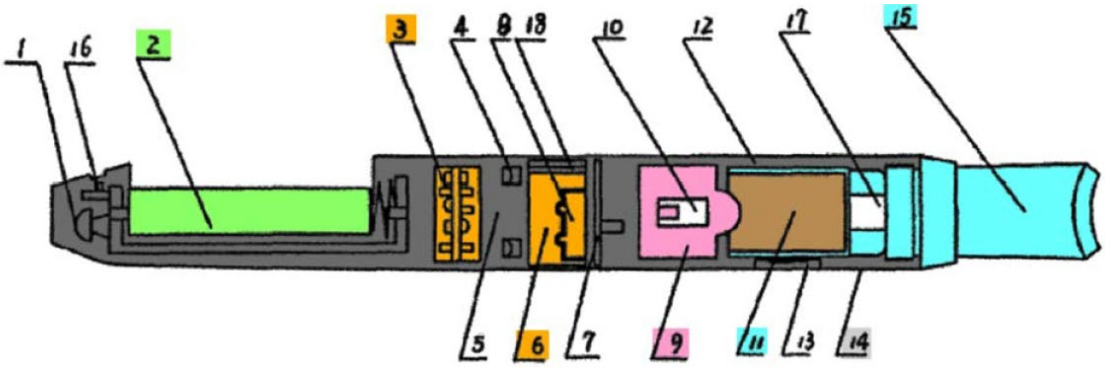

Annotated Figure 1 is a structural diagram of Hon's electronic cigarette, wherein Petitioner highlights battery 2 in green, electronic circuit board 3 and sensor 6 in orange, atomizer 9 in pink, liquid-supply bottle 11 and mouthpiece 15 in blue, and enclosure 14 in gray. *Id*. Petitioner contends Hon teaches that, when a smoker draws on Hon's device, the air pressure difference between normal pressure cavity 5 and negative pressure cavity 8 causes sensor 6 to send a signal that causes electronic circuit board 3 to begin operating. The pressure difference deforms ripple film 22 in sensor 6, driving second magnet 21 away from reed switch 19, which closes reed switch 19 and starts the electric switch of a field effect transistor. *Id*. at 23–24 (quoting Ex. 1005, 6–7 (referring to structures shown in Hon Figure 4),

citing Ex. 1003 ¶¶ 102–103). Petitioner further contends that when the field effect transistor is turned on, the resistance heater "is energized, and stays energized until the user stops drawing on the device." *Id*. at 24 (citing Ex. 1005, 6). Petitioner also contends that Hon's control circuit "will de-energize the heater if the battery voltage drops too low—thus regulating current flow during draw." *Id*. at 25.

Patent Owner argues that "[t]he '123 patent shows that 'regulating the current flow through the electrical resistance heater during draw' means something more than just turning on the heater." Prelim. Resp. 35. Patent Owner argues that Hon's reed switch turning on the current "is not current regulation—there can be no current regulation when the device is being turned on because there is not current flowing through the device yet to regulate," and "[t]urning the current off does not happen 'during draw,' because the switch only opens after the draw has been completed." *Id*. Patent Owner also argues that Hon does not state that the control circuit will de-energize the heater at all, much less during draw. *Id*. at 36.

The '123 patent teaches that a sensor adapted for sensing draw, "in concert with certain control circuitry within the controller" is "part of a puff-actuated controller adapted for regulating current flow through one or more of the resistance heating elements." Ex. 1001, 20:53–21:2. The controller components power the resistance heating element by providing current to "pass therethrough (and hence provide heat) in response to a signal provided by a puff-actuated controller that regulates current through one or more of the heating elements in response to signals from the sensor." *Id*. at 21:22–25, 21:48–53. For example, the '123 patent teaches that the heating element "can be turned 'on' and 'off' in response to a signal provided in response to

the" sensor and related control circuitry, or that "current flow through the second heating element 72 can be controlled only during periods of draw." *Id*. at 21:53–62. Based on these disclosures in the '123 patent, we disagree with Patent Owner, on the current record, that "regulating the current flow through the electrical resistance heater during draw" requires something different than what Hon describes.

Accordingly, on the record before us, we are persuaded that Petitioner's discussion of the particular structures in Hon, and the explanations in the Petition and the Fox Declaration, sufficiently show that Hon teaches a puff-actuated controller adapted for regulating current during draw as described by the '123 patent and required by claims 1 and 15. Pet. 22–25; Ex. 1003 ¶¶ 100–107.

Petitioner also contends that, in addition and in the alternative to Hon's teaching of the claimed puff-actuated controller, "a POSA would have been motivated to use Brooks's controller when implementing Hon to achieve the 'accurate and sophisticated current actuation and current regulati[on].'" Pet. 28 (alteration in original) (quoting Ex. 1006, 4:50–5:26; citing Ex. 1003 ¶¶ 108–114). According to Petitioner, one "advantage of the Brooks controller is that it more quickly achieves and maintains the desired temperature," and "a POSA would have known that vaping devices such as Hon's may suffer from poor aerosol generation during the first part of the draw because the heater does not heat up fast enough." *Id*. (citing Ex. 1023, 11, 15–16; Ex. 1006, 3:15–48; Ex. 1003 ¶¶ 108–114). Petitioner contends that the Brooks controller "also included other desirable features, such as 'a means to prevent the heating element from overheating during rapid puffing.'" *Id*. at 29 (quoting Ex. 1006, 5:25–26, 15:15–27; Ex. 1003

¶¶ 117–118). Additionally, Petitioner points to the ’123 patent, which states “that Brooks teaches ‘[r]epresentative types of electronic control components’ and ‘sensing mechanism components’ that can be used to ‘regulat[e] current flow through one or more of the resistance heating elements.’” *Id*. at 25 (citing Ex. 1001, 20:43–21:14).

Patent Owner argues that “Petitioner fails to consider the additional changes that would be required for this proposed combination and does not explain why a POSA would have had a reasonable expectation of success just by incorporating the Brooks controllers into the Hon ’043 device.” Prelim. Resp. 36–37. In that regard, Patent Owner argues that “a POSA would have understood that one could not incorporate the Brooks circuitry into Hon ’043 without also replacing the Hon ’043 heater, and also potentially Hon ’043’s battery” because “the Hon ’043 heater would be undersized and not able to heat the aerosol-forming material” if the Brooks circuitry is used. *Id*. at 37.

After reviewing the parties’ arguments and evidence, we are persuaded that Petitioner’s discussion of the particular structures in Hon and Brooks, and the explanations in the Petition and the Fox Declaration, sufficiently show that Petitioner’s proposed combination of Hon and Brooks teaches a puff-actuated controller adapted for regulating current during draw as the ’123 patent describes and claims 1 and 15 require. Pet. 25–29; Ex. 1003 ¶¶ 108–119. For example, Mr. Fox’s testimony, which is unrebutted at this stage of the proceeding, reasonably supports Petitioner’s contention that a POSA would have been motivated to incorporate the Brooks controller into the Hon device to rapidly heat the heater to the optimum temperature and maintain that temperature for the duration of the

draw. Ex. 1003 ¶¶ 110–111, 113–119. This determination is preliminary in nature and based on the record at this stage of the proceeding. We invite the parties to develop these arguments further at trial, to the extent permitted under our rules. In particular, we invite the parties to address Patent Owner's assertion that a POSA would not have had a reasonable expectation of success of achieving the claimed invention by combining the disclosures of Hon and Brooks Petitioner proposes.

c. Conclusion

Although our analysis focuses on the claim elements Patent Owner disputes, we have reviewed Petitioner's contentions for all of the elements of independent claims 1 and 15, as well as Petitioner's contentions regarding a reason to combine the teachings of Hon, Whittemore, and Brooks. Based on the record before us, we determine that Petitioner establishes a reasonable likelihood that it would prevail in showing that claims 1 and 15 would have been obvious over the combined teachings of Hon and Brooks. For the reasons discussed above, we are not persuaded that the Petition demonstrates a sufficient rationale for combining the teachings of Hon and Whittemore. We have also reviewed Petitioner's arguments and evidence with respect to claims 2, 5, 7, 9, 11, and 14, which directly depend from claim 1, and claims 18, 21, and 23–26, which directly depend from claim 15. Pet. 53–62. At this stage of the proceeding, Patent Owner does not offer any arguments addressing these dependent claims. *See* Prelim. Resp. 27–39. Based on the record before us, we also find that Petitioner's arguments and evidence are sufficient to show a reasonable likelihood that Petitioner would prevail in establishing the unpatentability of claims 2, 5, 7, 9, 11, 12, 14, 18, 21 and 23–26 as well.

E. Remaining Grounds

Petitioner contends that the subject matter of dependent claims 3, 4, 13, 16, and 17 would have been obvious over the combined teachings of Hon, Whittemore, Brooks, and Susa (Pet. 62–65), and the subject matter of dependent claims 6 and 19 would have been obvious over the combined teachings of Hon, Whittemore, Brooks, and Ray (*id*. at 66–68). At this stage of the proceeding, Patent Owner does not offer any arguments addressing these grounds. *See* Prelim. Resp. 39. Having determined that Petitioner establishes a reasonable likelihood of showing that at least one of the challenged claims is unpatentable, we exercise our discretion and institute an *inter partes* review based on these grounds as well. *See Guidance of the Impact of SAS on AIA Trial Proceedings* (April 26, 2018) (explaining that "the PTAB will institute as to all claims or none" and "if the PTAB institutes a trial, the PTAB will institute on all challenges raised in the petition").

III. CONCLUSION

Taking into consideration the arguments in the Petition, the Preliminary Response, the Reply, the Sur-Reply, and the evidence of record, we determine that Petitioner has established a reasonable likelihood that it will prevail on its challenge to at least one claim of the '123 patent. Additionally, we decline to exercise our discretion under 35 U.S.C. § 314(a) to deny institution. Thus, we institute an *inter partes* review of all challenged claims on the grounds presented.

IV. ORDER

In consideration of the foregoing, it is hereby

ORDERED that an *inter partes* review is instituted with respect to the grounds asserted in the Petition; and

FURTHER ORDERED that, pursuant to 35 U.S.C. § 314(c) and 37 C.F.R. § 42.4, notice is hereby given of the institution of a trial, which shall commence on the entry date of this Decision.

PETITIONER:

Jonathan M. Strang
Matthew J. Moore
Christopher W. Henry
LATHAM & WATKINS LLP
jonathan.strang@lw.com
matthew.moore@lw.com
christopher.henry@lw.com

PATENT OWNER:

David M. Maiorana
Anthony M. Insogna
Kenneth S. Luchesi
Geoffrey K. Gavin
Joshua R. Nightingale
George N. Phillips
David B. Cochran
JONES DAY
dmaiorana@jonesday.com
aminsogna@jonesday.com
kluchesi@jonesday.com
ggavin@jonesday.com
jrnightingale@jonesday.com
gphillips@jonesday.com
dcochran@jonesday.com