[19] 中华人民共和国国家知识产权局

[51] Int. Cl[7]
A24D 1/18
A24F 47/00

[12] 实用新型专利说明书

[21] ZL 专利号 200420031182.0

[45] 授权公告日 2005 年 8 月 24 日

[11] 授权公告号 CN 2719043Y

[22] 申请日 2004.4.14
[21] 申请号 200420031182.0
[73] 专利权人 韩 力
地址 香港中环干诺道中 168 – 200 号信德中心西翼 10 楼 1010 – 12 室
[72] 设计人 韩 力
[74] 专利代理机构 沈阳科苑专利商标代理有限公司
代理人 许宗富

权利要求书 2 页 说明书 5 页 附图 5 页

[54] 实用新型名称 雾化电子烟

[57] 摘要

本实用新型涉及一种不含有焦油、只含烟碱(尼古丁)的雾化电子烟，包括壳体及吸嘴，壳体的外壁上开有进气孔，壳体内依次设有电子线路板、常压腔、传感器、气液分离器、雾化器、供液瓶；其中电子线路板由电子开关电路及高频发生器组成；在传感器的一侧开有传感器气流通道，传感器内设有负压腔；雾化器与供液瓶相接触，在雾化器的内部设有雾化腔；供液瓶的一侧与壳体之间设有锁定供液瓶的挡圈，供液瓶的另一侧开有雾汽通道；进气孔、常压腔、气液分离器、雾化器、雾汽通道、导气孔、吸嘴依次相连通。本实用新型无焦油，大大降低致癌风险，使用者仍有吸烟的感觉和兴奋，无需点燃，无火灾危害。

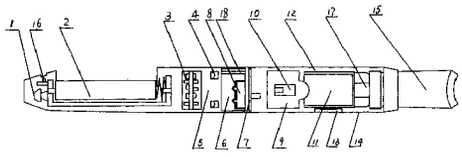

ISSN 1008-4274

知识产权出版社出版

ECTO WORLD-SV3 EX1029
U.S. Patent No. 11,925,202

1. 一种雾化电子烟，包括壳体及吸嘴，其特征在于：所述壳体（14）的外壁上开有进气孔（4），壳体（14）内依次设有电子线路板（3）、常压腔（5）、传感器（6）、气液分离器（7）、雾化器（9）、供液瓶（11）；其中电子线路板（3）由电子开关电路及高频发生器组成；在传感器（6）的一侧开有传感器气流通道（18），传感器（6）内设有负压腔（8）；雾化器（9）与供液瓶（11）相接触，在雾化器（9）的内部设有雾化腔（10）；供液瓶（11）的一侧与壳体（14）之间设有锁定供液瓶（11）的挡圈（13），供液瓶（11）的另一侧开有雾汽通道（12）；进气孔（4）、常压腔（5）、气液分离器（7）、雾化器（9）、雾汽通道（12）、导气孔（17）、吸嘴（15）依次相连通；壳体（14）内的前端还包括一个发光二极管（1）和电池（2），共同构成一个烟嘴形、雪茄形或烟斗形的整体。

2. 一种如权利要求1所述的雾化电子烟，其特征在于：在壳体（14）内，雾化器（9）后置，供液瓶（11）设在气液分离器（7）和雾化器（9）之间，在供液瓶（11）的一端加设有将供液瓶（11）压紧在雾化器（9）上的弹片（33）。

3. 按照权利要求1或2所述的雾化电子烟，其特征在于：在壳体（14）的内壁上加设有显示屏（32）。

4. 按照权利要求1或2所述的雾化电子烟，其特征在于：在壳体（14）内与传感器（6）并联设有用于手动清洁的微动开关（16）。

5. 按照权利要求1或2所述的雾化电子烟，其特征在于：所述的传感器（6）与其内部的负压腔（8）之间设有波纹膜（22），传感器（6）内还设有第一磁钢（20）、第二磁钢（21）及置于两者之间的干簧管（19），第二磁钢（21）固接在波纹膜（22）上。

6. 按照权利要求1或2所述的雾化电子烟，其特征在于：所述的传感器（6）内置有硅胶件逆止阀（31），阀内设有第三磁钢（34），阀外靠近磁钢的一侧设有干簧管（19）。

7. 按照权利要求1或2所述的雾化电子烟，其特征在于：所述的气液分离器（7）上开有通孔。

8. 按照权利要求7所述的雾化电子烟，其特征在于：在气液分离器（7）上的通孔外套有硅胶件逆止阀（31）。

9. 按照权利要求1或2所述的雾化电子烟，其特征在于：所述雾化腔（10）的雾化腔壁（25）上开有溢流孔（29），雾化腔（10）腔内设有加热体（26），在加热体（26）的一侧开有长气流喷射孔（24），多孔体（27）包

在雾化腔壁（25）外，雾化器（9）的一侧设有第一压电片（23），另一侧设有凸起（36）。

10. 按照权利要求 1 或 2 所述的雾化电子烟，其特征在于：所述的雾化器（9）中加设第二压电片（35）。

11. 按照权利要求 9 所述的雾化电子烟，其特征在于：所述的雾化器（9）中的多孔体（27）可用泡沫镍、不锈钢纤维毡、高分子多聚物发泡体及泡沫陶瓷制成；加热体（26）可用铂丝、镍铬合金或含有稀土元素的铁铬铝合金丝制成，也可制成片状体；雾化腔壁（25）可用氧化铝或陶瓷制成。

12. 按照权利要求 7 所述的雾化电子烟，其特征在于：所述的气液分离器（7）可用塑料或硅橡胶制成。

13. 按照权利要求 1 或 2 所述的雾化电子烟，其特征在于：所述供液瓶（11）内装有贮液多孔体（28），其可用聚丙纤维、涤纶纤维或尼龙纤维充填，或用塑料发泡成形体充填；也可用聚氯乙烯、聚丙烯、聚碳酸酯注塑成多层板的柱状物。

14. 按照权利要求 5 所述的雾化电子烟，其特征在于：干簧管（19）、第一磁钢（20）、第二磁钢（21）、波纹膜（22）可用有封闭膜的半导体应变片来代替，安装在传感器波纹膜位置。

雾化电子烟

技术领域

本实用新型涉及一种电子烟，特别是一种不含有焦油、只含烟碱（尼古丁）的雾化电子烟。

背景技术

在当今“吸烟有害健康”已成为常识的情况下，全世界目前仍有10亿人吸烟，而且每年这个数字还在扩大。2003年3月1日世界卫生组织(WHO)通过的第一个国际禁烟协定《烟草控制框架公约》，据WHO提供的数字表明，吸烟每年造成490万人死亡，尽管吸烟可导致严重的呼吸系统疾病和癌症，让吸烟者完全戒烟是极其困难的事。

香烟的有效成分是烟碱（即尼古丁），吸烟时烟碱随着香烟燃烧产生的大量焦油雾滴进入肺泡后被迅速吸收，烟碱被吸收入血后作用于中枢神经系统的受体上，引起类似兴奋剂的“陶醉感”，如吸烟者所经历的头晕目眩或飘飘然的感觉。

烟碱是小分子生物碱，在小剂量下对人体基本无害，而且在血液中的半衰期极短。烟草的有害物质主要是焦油，烟草焦油是由数千种成分组成，其中有数十种成分是致癌物。目前证实被动吸烟对不吸烟者的危害更大。

为了寻找只含烟碱而不含有害焦油的香烟代用品，有许多发明是用较纯的烟碱制成诸如“戒烟贴”、“烟碱含漱水”、“包装在有抛射剂的高压气罐喷雾剂”、“烟碱口香糖”、“烟碱饮料”等产品，这些产品虽然没有焦油的危害，但因烟碱吸收缓慢，在血液中不能建立有效的高峰浓度，不能解决需求烟碱“过瘾”的感觉，同时也剥夺了吸烟者已经养成的“抽”、“吸”的习惯，因而类似的产品不能真正的作为戒烟用品或香烟代用品。

实用新型内容

为了克服上述不足，本实用新型的目的在于提供一种具有戒烟和香烟代用品作用的雾化电子烟。

本实用新型的目的是通过以下技术方案来实现的：

本实用新型包括壳体及吸嘴，壳体的外壁上开有进气孔，壳体内依次设有电子线路板、常压腔、传感器、气液分离器、雾化器、供液瓶；其中电子线路板由电子开关电路及高频发生器组成；在传感器的一侧开有传感器气流通道，传感器内设有负压腔；雾化器与供液瓶相接触，在雾化器的内部设有雾化腔；供液瓶的一侧与壳体之间设有锁定供液瓶的挡圈，供液瓶的另一侧开有雾汽通道；进气孔、常压腔、气液分离器、雾化器、雾汽通道、导气孔、

吸嘴依次相连通；壳体内的前端还包括一个发光二极管和电池，共同构成一个烟嘴形、雪茄形或烟斗形的整体。

其中：在壳体的内壁上加设有显示屏；在壳体内与传感器并联设有用于手动清洁的微动开关；传感器与其内部的负压腔之间设有波纹膜，传感器内还设有第一磁钢、第二磁钢及置于两者之间的干簧管，第二磁钢固接在波纹膜上；传感器内置有硅胶件逆止阀，阀内设有第三磁钢，阀外靠近磁钢的一侧设有干簧管；气液分离器上开有通孔，在气液分离器上的通孔外套有硅胶件逆止阀；雾化腔的雾化腔壁上开有溢流孔，雾化腔腔内设有加热体，在加热体的一侧开有长气流喷射孔，多孔体包在雾化腔壁外，雾化器的一侧设有第一压电片，另一侧设有凸起；雾化器中加设第二压电片；雾化器中的多孔体可用泡沫镍、不锈钢纤维毡、高分子多聚物发泡体及泡沫陶瓷制成；加热体可用铂丝、镍铬合金或含有稀土元素的铁铬铝合金丝制成，也可制成片状体；雾化腔壁可用氧化铝或陶瓷制成；气液分离器可用塑料或硅橡胶制成；供液瓶内装有贮液多孔体，其可用聚丙纤维、涤纶纤维或尼龙纤维充填，或用塑料发泡成形体充填；也可用聚氯乙烯、聚丙烯、聚碳酸酯注塑成多层板的柱状物；干簧管、第一磁钢、第二磁钢、波纹膜可用有封闭膜的半导体应变片来代替，安装在传感器波纹膜位置。

本实用新型还公开了另一种结构的雾化电子烟，在壳体内，雾化器后置，供液瓶设在气液分离器和雾化器之间，在供液瓶的一端加设有将供液瓶压紧在雾化器上的弹片。

本实用新型的优点是：吸烟无焦油，大大降低致癌风险，使用者仍有吸烟的感觉和兴奋，无需点燃，无火灾危害。

本实用新型的装置和连接结构在贮液器稍加改动后可装入常规药物供肺内给药器械。

附图说明

图 1 为本实用新型的一种整体结构示意图；

图 2 为本实用新型的另一种整体结构示意图；

图 3 为本实用新型带显示屏的整体结构示意图；

图 4 为本实用新型传感器的结构图；

图 5 为本实用新型带有硅胶件逆止阀的传感器结构图；

图 6 为本实用新型一种雾化器的结构图；

图 7 为本实用新型雾化器中陶瓷件的结构图；

图 8 为本实用新型另一种雾化器的结构图；

图 9 为本实用新型一种气液分离器的结构图；

图 10 为本实用新型另一种气液分离器的结构图；

图 11 为本实用新型供液瓶及吸嘴的连接结构图；

图 12 为本实用新型的电路原理图。

具体实施方式

下面结合附图对本实用新型作进一步详述。

实施例一

如图 1 所示，本实用新型可构成一个烟嘴形、雪茄形或烟斗形的整体。壳体 14 的外壁上开有进气孔 4，壳体 14 内顺序设置有发光二极管 1、电池 2、电子线路板 3、常压腔 5、传感器 6、气液分离器 7、雾化器 9、供液瓶 11、吸嘴 15。电子线路板 3 由电子开关电路及高频发生器组成。如图 4 所示，传感器 6 内设有负压腔 8，由波纹膜 22 与传感器 6 隔开。传感器 6 内还设有第一磁钢 20、第二磁钢 21 及置于两者之间的干簧管 19，第二磁钢 21 固接在波纹膜 22 上。雾化器 9 通过凸起 36 与供液瓶 11 相接触，雾化器 9 内部设有雾化腔 10。如图 6、图 7 所示，雾化腔 10 的雾化腔壁 25 上开有溢流孔 29，腔内设有加热体 26，可用铂丝、镍铬合金或含有稀土元素的铁铬铝合金丝制成，也可制成片状体。正对加热体 26 的一侧开有喷射孔，喷射孔可根据雾化腔壁 25 的材料而选用长气流喷射孔 24 或短气流喷射孔 30。长气流喷射孔 24 可采用 0.1mm ~ 1.3mm 狭缝结构或Φ0.2mm ~ 1.3mm 圆孔的单孔及多孔结构；短气流喷射孔 30 的直径在 0.3mm ~ 1.3mm。雾化腔壁 25 外包有多孔体 27，可用泡沫镍、不锈钢纤维毡、高分子多聚物发泡体及泡沫陶瓷制成。在雾化器 9 上还设有第一压电片 23。雾化腔壁 25 可用氧化铝或陶瓷制成。如图 9 所示，气液分离器 7 上开有通孔，可用塑料或硅橡胶制成。如图 11 所示，供液瓶 11 的一侧与壳体 14 之间设有锁定供液瓶 11 的挡圈 13，另一侧开有雾汽通道 12，瓶内装有贮液多孔体 28，可用聚丙纤维、涤纶纤维或尼龙纤维充填，或用塑料发泡成形体如聚胺酯泡沫柱或聚丙泡沫柱充填，也可用聚氯乙烯、聚丙烯、聚碳酸酯注塑成多层板的柱状物。进气孔 4、常压腔 5、气液分离器 7、雾化器 9、雾汽通道 12、导气孔 17、吸嘴 15 依次相连通。

如图 12 电路原理图所示，K1 为干簧管 19、RL 为加热体 26、LED1 为发光二极管 1、U2 为低电压检测片用于对锂电池的过放电保护、M1 为第一压电片 23，C1、C2、R3、L1、C3、BG、M1 构成三点式电容振荡器。其电路原理为：当 K1 闭合时，U1 即场效应功率管开启，RL 工作，同时三点式电容振荡器起振，M1 为雾化器 9 提供高频机械振动波，达到雾化效果。

当吸烟者吸烟时，吸嘴 15 处于负压状态，常压腔 5 与负压腔 8 之间的气压差或高速气流导致传感器 6 输出启动信号，与之相连接的电子线路板 3 工作。此时传感器 6 内的波纹膜 22 变形，带动第二磁钢 21 远离干簧管 19，干簧管 19 在第一磁钢 20 的过量磁力线作用下闭合（即 K1 闭合），启动场效应功率管电子开关（即 U1 开启），高频振荡器采用三点式电容振荡器，

频率在550KHz至8MHz，电路中频率自动微调与环形的第一压电片23谐振，对液体分子供能，同时发光二极管1在可充电电池2供电下发光。大气由进气孔4进到常压腔5内，经传感器气流通道18、再经气液分离器7上的通孔流到雾化器9内的雾化腔10。经过喷射孔的高速气流带动多孔体27中的烟液以微滴形式喷射进雾化腔10内，通过第一压电片23的超声雾化，再在加热体26的作用下进一步雾化，雾化后的大直径微滴在涡流的作用下附壁经溢流孔29被多孔体27重吸收，小直径微滴悬浮在气流中形成气溶胶经雾汽通道12、导气孔17、吸嘴15被吸出。供液瓶11中的贮液多孔体28与雾化器9上的凸起36接触实现毛细浸润供液。

吸嘴15上制有螺纹，当供液瓶11中的烟液用尽时，可旋转吸嘴15将其拧下，取出供液瓶11，将烟液注入供液瓶11内，重新装入壳体14内，拧紧吸嘴15。

干簧管19、第一磁钢20、第二磁钢21、波纹膜22还可用有封闭膜的半导体应变片来代替，安装在传感器波纹膜位置。

为了简化设计，可取消雾化器9上的第一压电片23，仅靠加热体26将烟液雾化。这种雾化器的尺寸可做的较小，整支雾化电子烟的连接结构与实施例一相同。此外，还可如图8所示，将雾化器9中的第一压电片23、加热体26取消，在雾化腔内加设单层或多叠层、平板形的第二压电片35，通过喷射孔的气流在其中心振动聚焦点雾化，达到强超声雾化的效果。

如图10所示，气液分离器7的通孔外还可套有硅胶件逆止阀31。吸烟时，气流到达通孔，由于通孔内的气压升高，使硅胶件逆止阀31开启，气流通过；不吸烟时，硅胶件逆止阀31关闭。

如图5所示，传感器6还可设计成带有硅胶件逆止阀31的结构。吸烟时，气流汇聚在硅胶件逆止阀31内，气压升高、气体膨胀，阀内的第三磁钢34逐渐靠近干簧管19，直至干簧管闭合、开启电路，随着气压差继续增大，硅胶件逆止阀31的出气口开启。干簧管19也可以用霍尔器件或磁敏二极管或磁敏三极管代替。

实施例二

如图2所示，为了改善供液状态，在壳体14内，雾化器9后置，供液瓶11设在气液分离器7和雾化器9之间，在供液瓶11的一端加设有将供液瓶11压紧在雾化器9上的弹片33，其他部件及工作原理与实施例一同。

在实施例一、实施例二所述的雾化电子烟的壳体14的内壁上，还可加设数字显示屏32，用来显示每天吸烟的次数、电池容量。传感器6采用线性信号输出，与吸力的强弱成正比（即吸力越大、工作的时间越长），雾化器9按线性方式工作，以模拟更真实的人性化香烟。

在壳体14内与传感器6还并联有用于手动清洁的微动开关16。在不吸

烟时，按下微动开关 16，与其并联的传感器 6 工作，或将壳体 14 内的残留物及其他杂质清除干净。

用于雾化的烟液含有 0.4～3.5％的烟碱，烟用香精 0.05～2％，有机酸 0.1～3.1％，抗氧剂 0.1～0.5％，余量为 1，2-丙二醇。

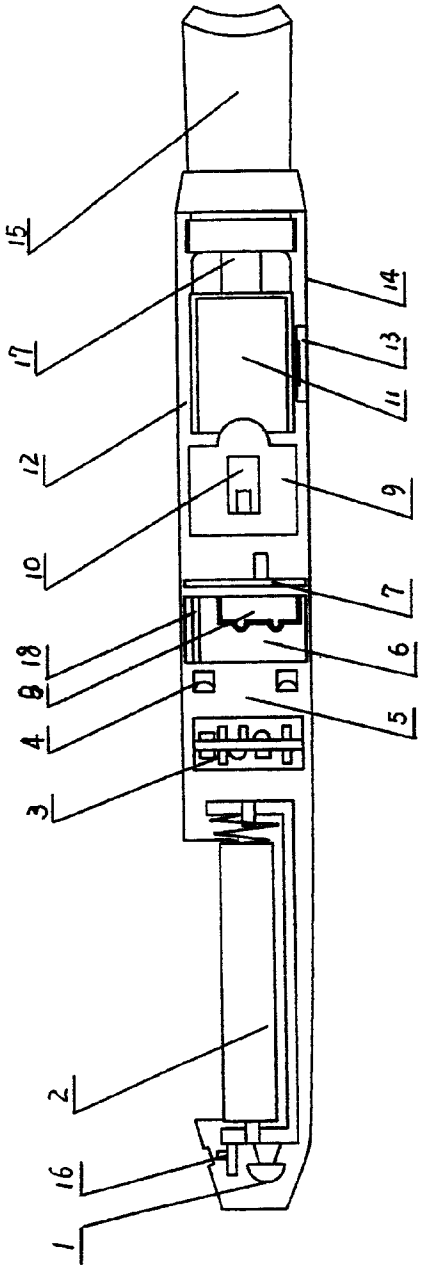

图1

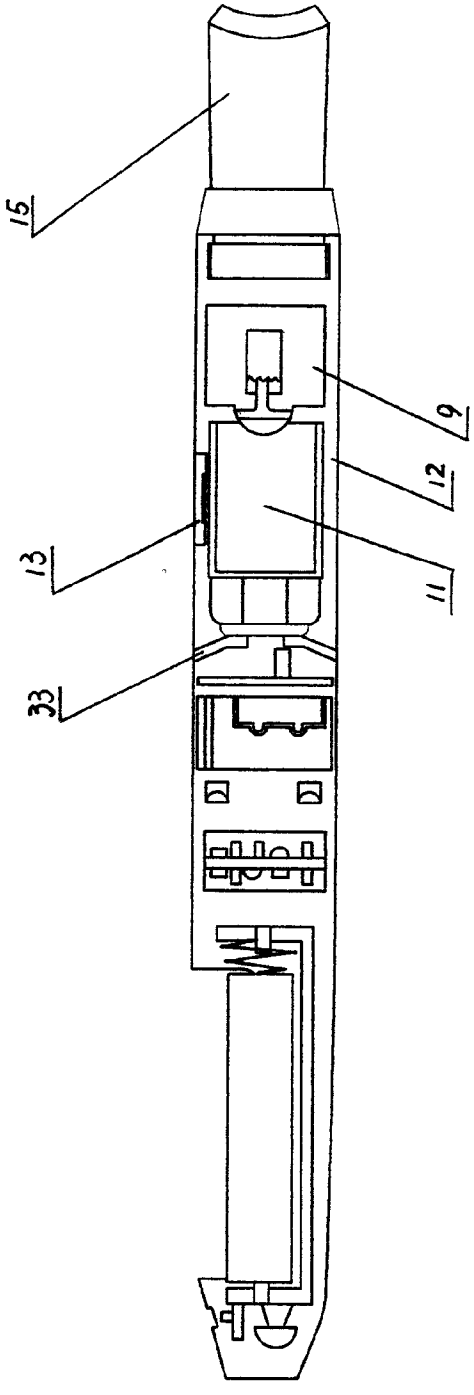

图2

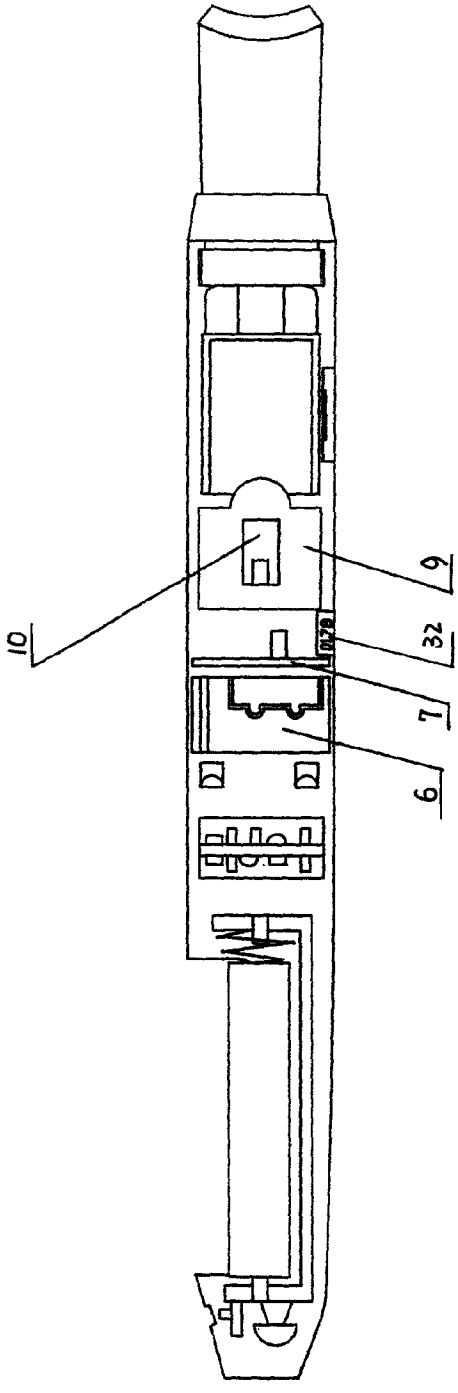

图3

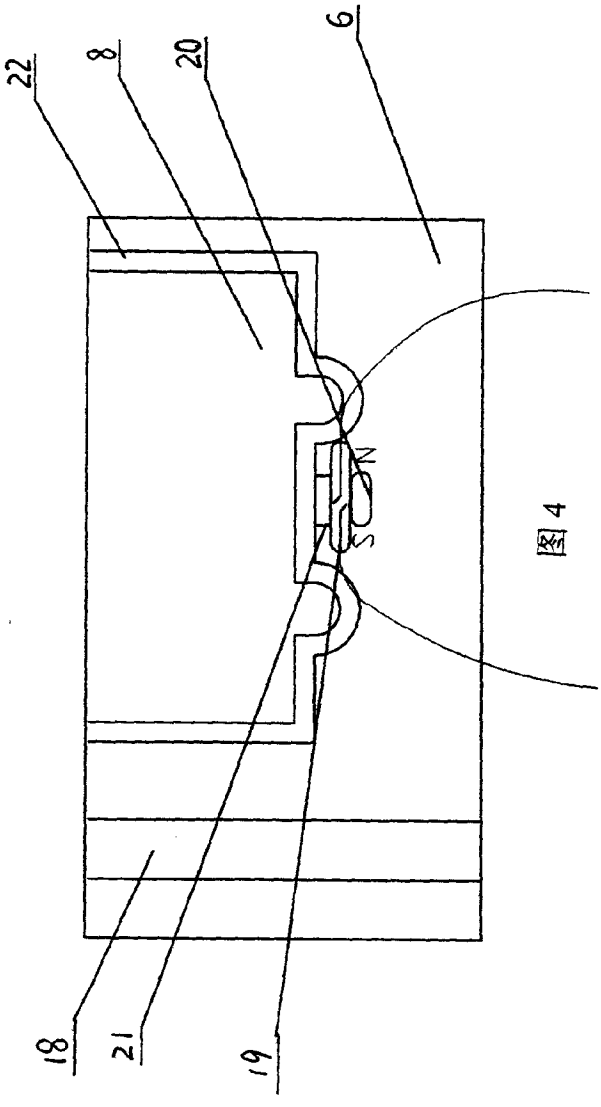

图4

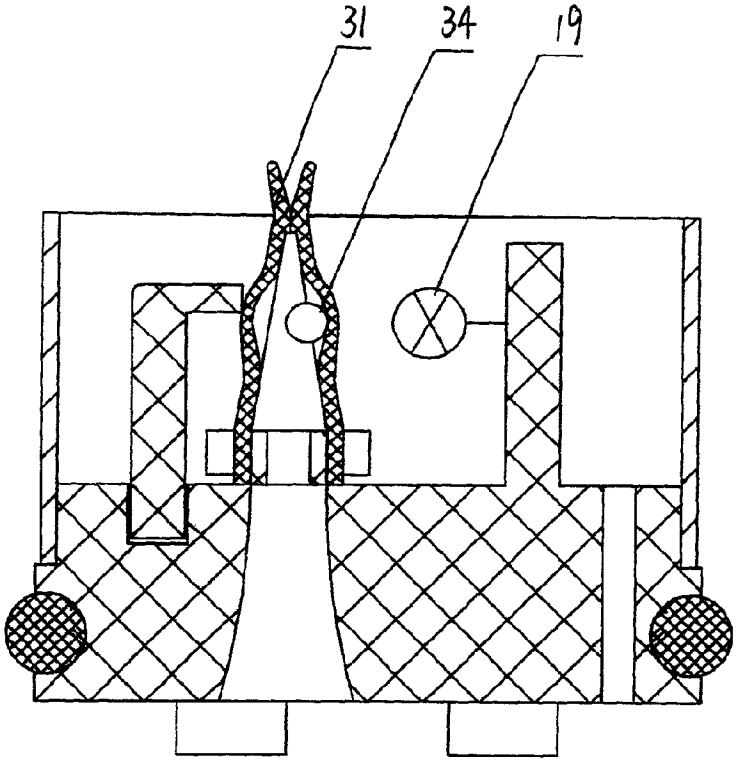

图 5

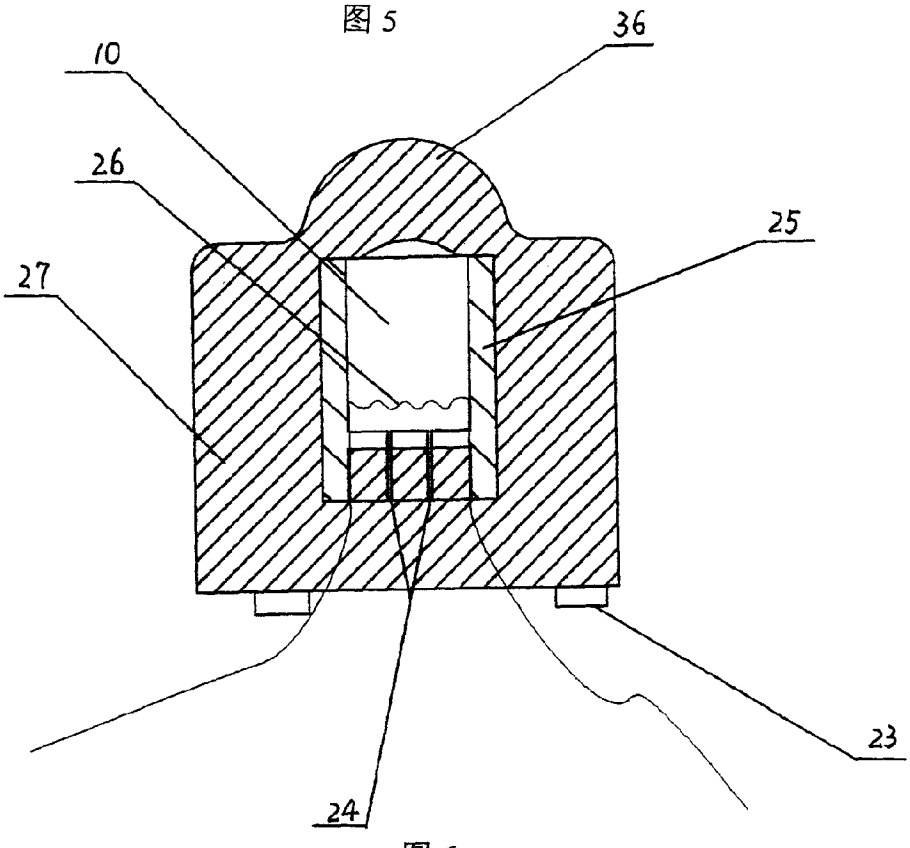

图 6

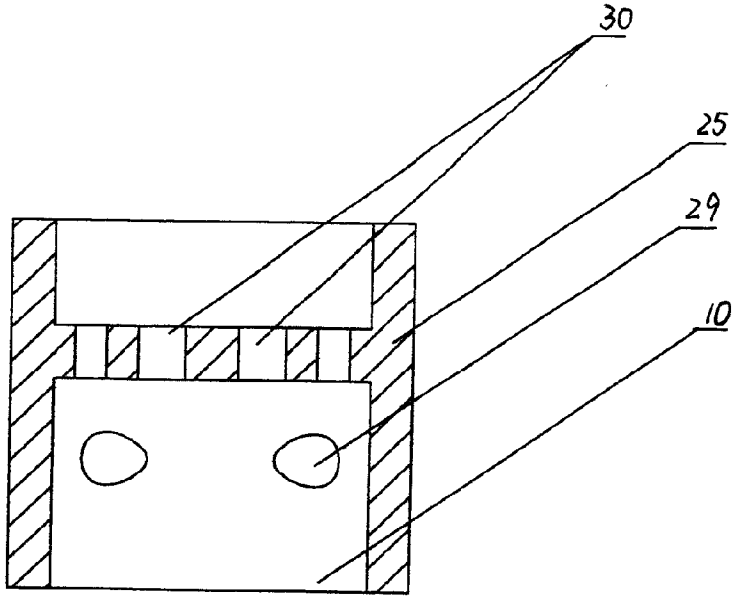

图 7

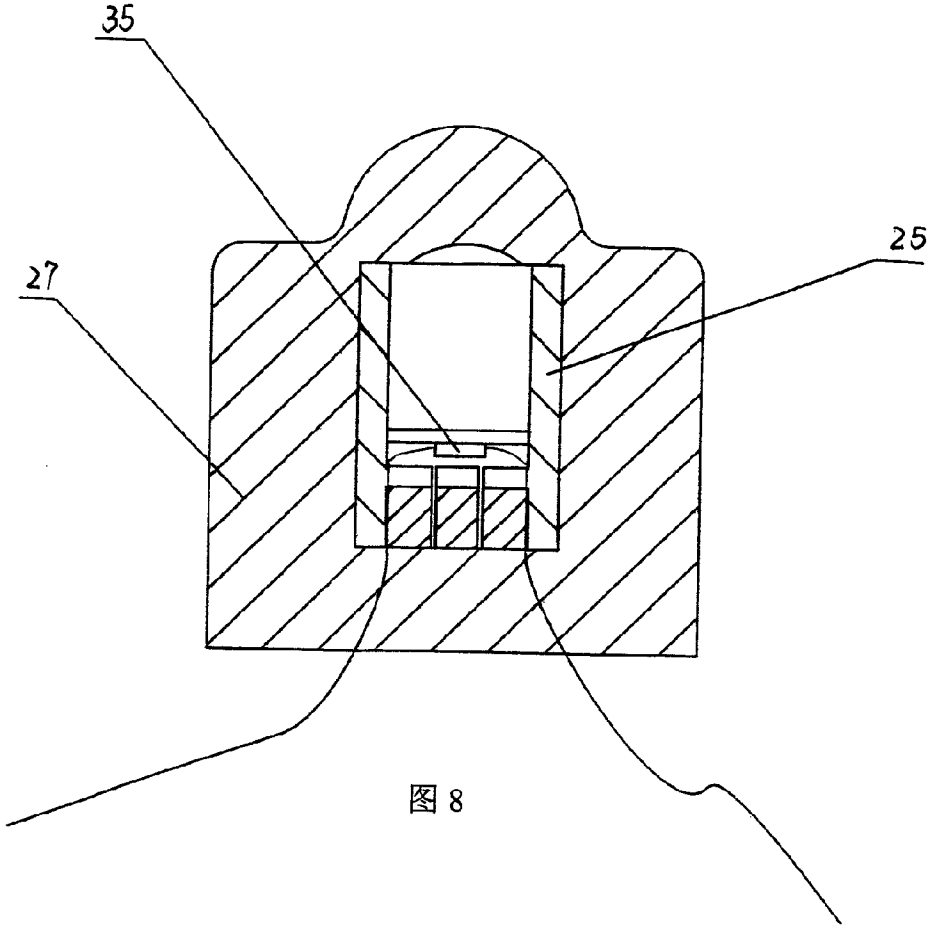

图 8

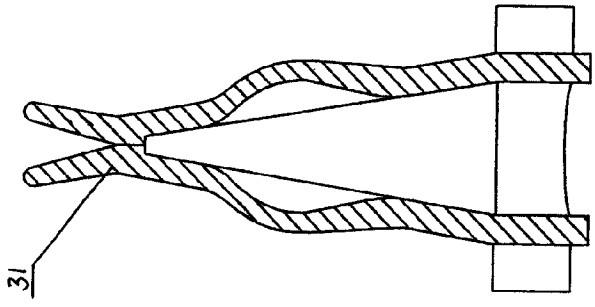

图 10

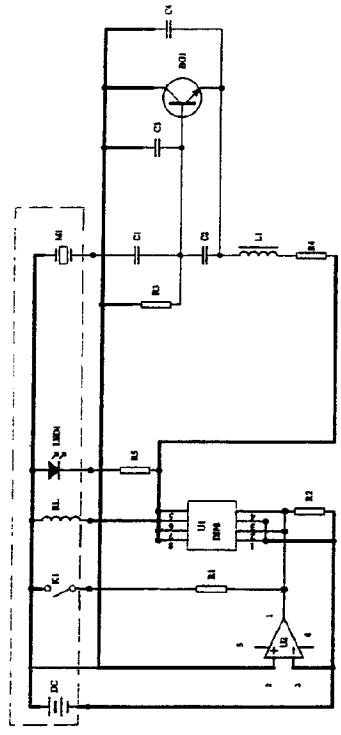

图 12

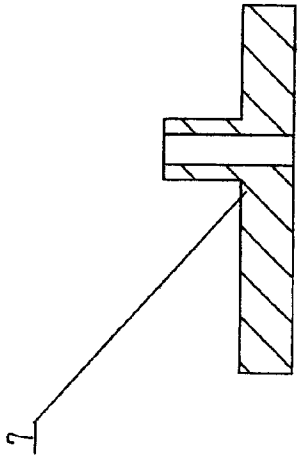

图 9

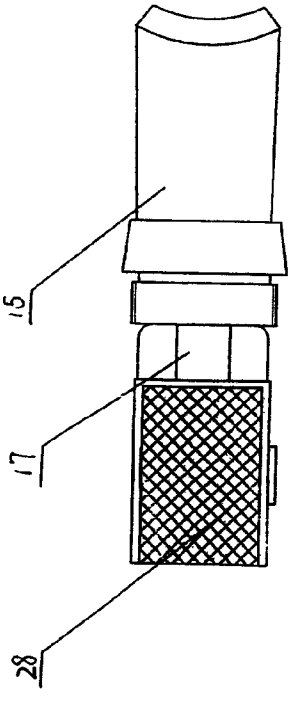

图 11

(19) State Intellectual Property Office of the People's Republic of China

(51) Int. CI[7]
A24D 1/18
A24F 47/00

(12) **Patent Specification for Utility Model**
(21) ZL Patent No. 200420031182.0
(45) Date of Announcement of Patent right Grant: Aug. 24, 2005 (11) No. of Announcement of Patent Right Grant: CN2719043Y

(22) Filing Date: April 14, 2004 (21) Application No. 200420031182.0 (73) Patentee: Hon Lik Address: Suite 12, 1010, 10th Floor, West part of Xinde Centre, No. 168-200, Gannuo Ave. Middle, Zhonghuan, HongKong (72) Designer: Hon Lik	(74) Patent Agency: Shenyang Patent & Trademark Agency Academia Sinica Agent: Xu Zongfu The number of pages of claims: 2 The number of pages of description: 5 The number of pages of drawings: 5

(54) Title of the Utility Model: Electronic Atomization Cigarette

(57) Abstract

The present utility model relates to an electronic atomization cigarette which only contains nicotine without tar. The electronic atomization cigarette includes a shell and a mouthpiece. The external wall of the shell has an air inlet. An electronic circuit board, a normal pressure cavity, a sensor, a vapor-liquid separator, an atomizer, and a liquid-supplying bottle are sequentially provided within the shell, wherein the electronic circuit board comprises an electronic switching circuit and a high frequency generator. A stream passage of the sensor is provided on one side of the sensor, and a negative pressure cavity is provided in the sensor. The atomizer and the liquid-supplying bottle are in contact with each other. An atomization cavity is arranged in the atomizer. A retaining ring for locking the liquid-supplying bottle is provided between one side of the liquid-supplying bottle and the shell, and an aerosol passage is provided on the other side of the liquid-supplying bottle. The air inlet, normal pressure cavity, vapor-liquid separator, atomizer, aerosol passage, gas vent and mouthpiece are sequentially interconnected. The product of the present utility model does not have tar, thus significantly reducing the cancerogenic risk. Users still feel as if they are smoking and experiencing the same excitement, and the cigarette is no need to be lit and is no fire risk.

Logic Tech. Development LLC EXHIBIT 1004 PAGE 0001

Claims

1. An electronic atomization cigarette comprising a shell and a mouthpiece, characterized in that an air inlet (4) is provided on the external wall of the shell (14); an electronic circuit board (3), a normal pressure cavity (5), a sensor (6), a vapor-liquid separator (7), an atomizer (9) and a liquid-supplying bottle (11) are arranged sequentially within the shell (14), wherein the electronic circuit board (3) comprises an electronic switching circuit and a high frequency generator; a stream passage (18) of the sensor is provided on one side of the sensor (6); a negative pressure cavity (8) is provided in the sensor (6); an atomizer (9) is in contact with the liquid-supplying bottle (11); an atomization cavity (10) is arranged in the atomizer (9); a retaining ring (13) for locking the liquid-supplying bottle (11) is provided between one side of the liquid-supplying bottle (11) and the shell (14), and an aerosol passage (12) is provided on the other side of the liquid-supplying bottle (11); the air inlet (4), the normal pressure cavity (5), the vapor-liquid separator (7), the atomizer (9), the aerosol passage (12), the gas vent (17), and the mouthpiece (15) are sequentially connected; a LED (1) and a cell (2) are further provided at a front end within the shell (14), collectively constituting an integrity like a cigarette holder, cigar or a pipe.

2. The electronic atomization cigarette according to claim 1, characterized in that the atomizer (9) is postposed within the shell (14), the liquid-supplying bottle (11) is arranged between the vapor-liquid separator (7) and the atomizer (9), and a spring piece (33) for pressing the liquid-supplying bottle (11) on the atomizer (9) is arranged at one end of the liquid-supplying bottle (11).

3. The electronic atomization cigarette according to claim 1 or claim 2, characterized in that a display screen (32) is arranged on the inner wall of the shell (14).

4. The electronic atomization cigarette according to claim 1 or claim 2, characterized in that a microswitch (16) is connected to the sensor (6) in parallel within the shell (14) for manually cleaning.

5. The electronic atomization cigarette according to claim 1 or claim 2, characterized in that a ripple film (22) is provided between the sensor (6) and the negative pressure cavity (8) within the sensor; a first magnetic steel (20), a second magnetic steel (21) and a Reed switch (19) connected between said first magnetic steel and said second magnetic steel are further provided within the sensor (6); and the second magnetic steel (21) is fixedly attached

Logic Tech. Development LLC EXHIBIT 1004 PAGE 0002

to the ripple film (22).

6. The electronic atomization cigarette according to claim 1 or claim 2, characterized in that a silicon gel check valve (31) is provided within the sensor (6); a third magnetic steel (34) is provided in the silicon gel check valve; and a Reed switch (19) is provided outside the silicon gel check valve, on a side close to the magnetic steel.

7. The electronic atomization cigarette according to claim 1 or claim 2, characterized in that a through hole is arranged on the vapor-liquid separator (7).

8. The electronic atomization cigarette according to claim 7, characterized in that

a silicon gel check value (31) covering the outside of the through hole on the vapor-liquid separator (7).

9. The electronic atomization cigarette according to claim 1 or claim 2, characterized in that an overflow hole (29) is arranged on an atomization cavity wall (25) of the atomization cavity (10); a heating element (26) is provided within the atomization cavity (10); a long stream ejection hole (24) is provided on one side of the heating element (26); and a porous body (27) is arranged outside around the atomization cavity wall (25); a first piezoelectric element (23) is provided on one side of the atomizer (9); and a bulge (36) is provided on another side of the atomizer.

10. The electronic atomization cigarette according to claim 1 or claim 2, characterized in that a second piezoelectric element (35) is additionally provided in the atomizer (9).

11. The electronic atomization cigarette according to claim 9, characterized in that

the porous body (27) in the atomizer (9) is made of foam nickel, stainless fiber felt, high molecule polymer foam and foam ceramic; the heating element (26) is made of platinum wire, nickel chromium alloy or iron chromium aluminum alloy wire with rare earth element, the heating element is also made into a sheet; the atomization cavity wall (25) is made of aluminum oxide or ceramics.

12. The electronic atomization cigarette according to claim 7, characterized in that the vapor-liquid separator (7) is made of plastics or silicon rubber.

13. The electronic atomization cigarette according to claim 1 or claim 2, characterized in that a solution storage porous body (28) is provided in the liquid-supplying bottle (11), the solution storage porous body is filled with polypropylene fiber, terylene fiber

Logic Tech. Development LLC EXHIBIT 1004 PAGE 0003

or nylon fiber, or filled with plastics that are shaped by foaming; the solution storage porous body is also molded into a column with laminated layers by polyvinyl chloride, polypropylene, polycarbonate.

14. The electronic atomization cigarette according to claim 5, characterized in that the Reed switch (19), the first magnetic steel (20), the second magnetic steel (21) and the ripple film (22) are replaced by a semiconductor strain gauge with sealed film arranged at the position of the ripple film of the sensor.

Logic Tech. Development LLC EXHIBIT 1004 PAGE 0004

ELECTRONIC ATOMIZATION CIGARETTE

TECHNICAL FIELD

The present utility model relates to an electronic cigarette, in particular to an electronic atomization cigarette that only contains nicotine without tar.

BACKGROUND ART

Despite it is commonly known that "smoking is harmful to your health", the number of smokers worldwide is up to 1 billion, and the number is increasing every year. On Mar. 1, 2003, the World Health Organization (WHO) concluded a global Framework Convention on Tobacco Control. According to the statistical data from WHO, about 4.9 million people die of is diseases caused by smoking each year. Although smoking may cause serious respiratory diseases and cancer, it remains extremely difficult for smokers to quit smoking completely.

The active ingredient in a cigarette is nicotine. During smoking, nicotine, along with a lot of tar aerosol droplets produced in the cigarette burning, enters smoker's alveolus and is rapidly absorbed. After being absorbed into the blood of a smoker, nicotine then produces its effect on the receptors of the smoker's central nervous system, which makes him/her relax and enjoy an inebriety similar to that produced by an exhilarant.

Nicotine is a kind of alkaloid with low molecular weight and its half-life in blood is quite short. The major harmful substance in tobacco is tar, tar in tobacco is composed of thousands of ingredients, tens of which are carcinogenic substances. At present it has been proven that passive smoking can be more harmful to non-smokers.

Some cigarette substitutes flat contain only nicotine without tar have been proposed, many of them, such as "nicotine patch", "nicotine mouthwash", "spray agent packaged in high pressure gas tank with propellant", "nicotine chewing gum", "nicotine drink" etc., are made of pure nicotine. Although these cigarette substitutes are free from tar, their major disadvantage is that an effective peak concentration cannot be reached in the blood of a smoker due to slow absorption of nicotine and thus it cannot make a smoker

Logic Tech. Development LLC EXHIBIT 1004 PAGE 0005

get real fin, in addition, these cigarette substitutes cannot satisfy habitual smoking actions of a smoker, for example, inhaling action or sucking action, and thus are not likely to be widely accepted as effective substitutes for quitting smoking or cigarette substitutes.

THE SUMMARY OF THE UTILITY MODEL

To overcome the above-referenced drawbacks, an object of the present utility model is to provide an electronic atomization cigarette that may function as a substitute for smoking cessation products or as a cigarette substitute.

The object of the present utility model is achieved by the following technical solution.

The present utility model comprises a shell and a mouthpiece; an air inlet is provided on the external wall of the shell; an electronic circuit board, a normal pressure cavity, a sensor, a vapor-liquid separator, an atomizer and a liquid-supplying bottle are arranged sequentially within the shell, wherein the electronic circuit board comprises an electronic switching circuit and a high frequency generator; a stream passage of the sensor is provided on one side of the sensor; a negative pressure cavity is provided in the sensor; an atomizer is in contact with the liquid-supplying bottle; an atomization cavity is arranged in the atomizer; a retaining ring for locking the liquid-supplying bottle is provided between one side of the liquid-supplying bottle and the shell, and an aerosol passage is provided on the other side of the liquid-supplying bottle; the air inlet, the normal pressure cavity, the vapor-liquid separator, the atomizer, the aerosol passage, the gas vent, and the mouthpiece are sequentially connected; a LED and a cell are further provided at a front end within the shell, collectively constituting an integrity like a cigarette holder, cigar or a pipe.

Wherein: a display screen is arranged on the inner wall of the shell; a microswitch is connected to the sensor in parallel within the shell for manually cleaning; a ripple film is provided between the sensor and the negative pressure cavity within the sensor; a first magnetic steel, a second magnetic steel and a Reed switch connected between said first magnetic steel and said second magnetic steel are further provided within the sensor; and the second magnetic steel is fixedly attached to the ripple film. A silicon gel check valve is provided within the sensor; a third magnetic steel is provided in the silicon gel check valve; and a Reed switch is provided outside the silicon gel check valve, on a side close to the

Logic Tech. Development LLC EXHIBIT 1004 PAGE 0006

magnetic steel; a through hole is arranged on the vapor-liquid separator; a silicon gel check value covering the outside of the through hole on the vapor-liquid separator; an overflow hole is arranged on an atomization cavity wall of the atomization cavity; a heating element is provided within the atomization cavity; a long stream ejection hole is provided on one side of the heating element; a porous body is arranged outside around the atomization cavity wall; a first piezoelectric element is provided on one side of the atomizer; and a bulge is provided on another side of the atomizer; a second piezoelectric element is additionally provided in the atomizer; the porous body in the atomizer is made of foam nickel, stainless fiber felt, high molecule polymer foam and foam ceramic; the heating element is made of platinum wire, nickel chromium alloy or iron chromium aluminum alloy wire with rare earth element, the heating element can also be made into a sheet; the atomization cavity wall is made of aluminum oxide or ceramics; the vapor-liquid separator is made of plastics or silicon rubber; a solution storage porous body is provided in the liquid-supplying bottle, the solution storage porous body is filled with polypropylene fiber, terylene fiber or nylon fiber, or filled with plastics that are shaped by foaming; the solution storage porous body can also be molded into a column with laminated layers by polyvinyl chloride, polypropylene, polycarbonate; the Reed switch, the first magnetic steel, the second magnetic steel and the ripple film are replaced by a semiconductor strain gauge with sealed film arranged at the position of the ripple film of the sensor.

The present utility model also discloses an electronic atomization cigarette with another structure: the atomizer is postposed within the shell, the liquid-supplying bottle is arranged between the vapor-liquid separator and the atomizer, and a spring piece for pressing the liquid-supplying bottle on the atomizer is arranged at one end of the liquid-supplying bottle.

The advantages of the present utility model include smoking without tar, significantly reducing the cancerogenic risk. Furthermore users still feel as if they are smoking and experiencing the same excitement, and the cigarette is no need to be lit and is no fire risk.

With slight modification of the solution storage container, the device and connecting structures of the present utility model can be filled with conventional drug for

Logic Tech. Development LLC EXHIBIT 1004 PAGE 0007

pulmonary administration apparatus.

DESCRIPTION OF THE DRAWINGS

FIG. 1 is a schematic diagram of an overall structure according to the present utility model;

FIG. 2 is a schematic diagram of another overall structure according to the present utility model;

FIG. 3 is a schematic diagram of an overall structure with a display screen according to the present utility model;

FIG. 4 is a structural diagram of a sensor according to the present utility model;

FIG. 5 is a structural diagram of a sensor with a silicon gel check valve according to the present utility model;

FIG. 6 is a structural diagram of an atomizer according to the present utility model;

FIG. 7 is a structural diagram of the ceramic member in an atomizer according to the present utility model;

FIG. 8 is a structural diagram of another atomizer according to the present utility model;

FIG. 9 is a structural diagram of a vapor-liquid separator according to the present utility model;

FIG. 10 is a structural diagram of another vapor-liquid separator according to the present utility model;

FIG. 11 is a structural diagram of the connection of a liquid-supplying bottle and a mouthpiece according to the present utility model;

FIG. 12 is a functional diagram of a circuit according to the present utility model.

DETAILED DESCRIPTION OF THE INVENTION

The present utility model is further described below with reference to the accompanying drawings.

Logic Tech. Development LLC EXHIBIT 1004 PAGE 0008

Embodiment 1

As shown in FIG. 1, the present utility model can form an integrity like a cigarette holder, a cigar or a pipe. An air inlet 4 is provided on the external wall of the shell 14. A LED 1, a cell 2, an electronic circuit board 3, a normal pressure cavity 5, a sensor 6, a vapor-liquid separator 7, an atomizer 9, a liquid-supplying bottle 11 and a mouthpiece 15 are sequentially provided within the shell 14. The electronic circuit board 3 comprises an electronic switching circuit and a high frequency generator. As shown in FIG. 4, a negative pressure cavity 8 is provided in the sensor 6 and is separated from the sensor 6 by a ripple film 22. A first magnetic steel 20,a second magnetic steel 21, and a Reed switch 19 arranged between them are also provided within the sensor 6, and the second magnetic steel 21 is attached to the ripple film 22. The atomizer 9 is in contact with the liquid-supplying bottle 11 via the bulge 36, and an atomization cavity 10 is provided in the atomizer 9. As shown in FIGS. 6 and 7, an overflow hole 29 is provided on the atomization cavity wall 25 of the atomization cavity 10. A heating element 26, which can be made of platinum wire, nickel chromium alloy or iron chromium aluminum alloy wire with rare earth element, is provided within the cavity, and the heating element 26 can also be made into a sheet form. An ejection hole is provided on the side opposite to the heating element 26 and the ejection hole can be determined to select either a long stream ejection hole 24 or a short stream ejection hole 30, depending on the material used for the atomization cavity wall 25. The long stream ejection hole 24 can employ a slot structure of 0.1 mm-1.3 mm or a circular hole structure of Φ0.2 mm-1.3 mm with a single and multiple holes. The short stream ejection hole 30 has a diameter of about 0.3 mm-1.3 mm. The atomization cavity wall 25 is surrounded with a porous body 27, which can be made of foam nickel, stainless steel fiber felt, high molecule polymer foam and foam ceramic. A first piezoelectric element 23 is also provided on the atomizer 9. The atomization cavity wall 25 can be made of aluminum oxide or ceramic. As shown in FIG. 9, a through hole is provided on the vapor-liquid separator 7, and can be made of plastic or silicon rubber. As shown in FIG. 11, a retaining ring 13 for locking the liquid-supplying bottle 11 is provided between one side of the liquid-supplying bottle 11 and the shell 14, an aerosol passage 12 is provided on the other side of the liquid-supplying bottle. A solution storage porous body 28 is provided

Logic Tech. Development LLC EXHIBIT 1004 PAGE 0009

in the liquid-supplying bottle, and can be filled with polypropylene fiber, terylene fiber or nylon fiber, or be filled with plastic that are shaped by foaming, such as polyamine resin foam column or polypropylene foam column; alternatively, it may be made of a column formed by molding polyvinyl chloride, polypropylene, polycarbonate into a stack of laminated layers. The air inlet 4, normal pressure cavity 5, vapor-liquid separator 7, atomizer 9, aerosol passage 12, gas vent 17, mouthpiece 15 are sequentially interconnected.

As shown in the functional diagram of the circuit in FIG. 12, K1 refers to the Reed switch 19, RL refers to the heating element 26, LED1 refers to the Light Emitting Diode 1, U2 refers to a low voltage detecting element used for the over-discharging protection of the lithium cell, M1 refers to a first piezoelectric element 23, and C1, C2, R3, L1, C3, BG and M1 collectively constitute a Colpitts oscillator. The operating principle of the circuit is as follows: when K1 is closed, U1, i.e., the field effect power transistor, is turned on, RL starts, and the Colpitts oscillator starts oscillating; M1 will provide the high frequency mechanical oscillatory wave to the atomizer 9 to achieve the result of atomization.

When a smoker smokes, the mouthpiece 15 is under negative pressure, the air pressure difference or high speed stream between the normal pressure cavity 5 and the negative pressure cavity 8 will cause the sensor 6 to output an actuating signal; the electronic circuit board 3 connected therewith goes into operation. Now the ripple film 22 in the sensor 6 is deformed to take the second magnetic steel 21 away from the Reed switch 19, and the Reed switch 19 is then closed (i.e., K1 is closed) under the effect of the excessive magnetic line of force from the first magnetic steel 20, starting the field effect power transistor switch (i.e. U1 starts). The high frequency oscillator uses the Colpitts oscillator with the frequency between 550KHz and 8KHz; the automatic fine-adjusting element in the circuit resonates with the first piezoelectric element 23 in the form of a ring to supply power to liquid molecules, and the LED 1 can be lit under the supply of the rechargeable battery 2. The air enters the normal pressure cavity 5 through the air inlet 4, passes through the air passage 18 of the sensor and then the through hole in the vapor-liquid separator 7, and flows into the atomization cavity 10 in the atomizer 9. The high speed stream passing through the ejection hole drives the nicotine solution in the porous body 27 to eject into the atomization cavity 10 in the form of droplet, where the nicotine

Logic Tech. Development LLC EXHIBIT 1004 PAGE 0010

solution is subjected to the ultrasonic atomization by the first piezoelectric element 23 and is further atomized by the heating element 26. After the atomization, the large diameter droplets stick to the wall under the action of eddy flow and are reabsorbed by the porous body 27 via the overflow hole 29, whereas the small diameter droplets float in stream and forms aerosols, which are sucked out via the aerosol passage 12, gas vent 17 and mouthpiece 15. The solution storage porous body 28 in the liquid-supplying bottle 11 will be in contact with the bulge 36 on the atomizer 9, thereby achieving the capillary infiltration liquid-supplying.

The mouthpiece 15 is threaded. When the nicotine solution in the liquid-supplying bottle 11 is used up, users can screw the mouthpiece 15 out to take the liquid-supplying bottle 11 out, refill the liquid-supplying bottle 11 with the nicotine solution, put the liquid-supplying bottle 11 into the shell 14 again, and then screw the mouthpiece 15.

The Reed switch 19, the first magnetic steel 20, the second magnetic steel 21, the ripple film 22 can be replaced by a semiconductor strain gauge with sealed film, which is mounted in the place of the ripple film of the sensor.

To simplify the design, the first piezoelectric element 23 on the atomizer 9 can be omitted, and the atomization of the nicotine solution will be made only by the heating element 26. The size of such an atomizer can be made smaller, and the structure of the connection of the whole electronic atomization cigarette is the same as the embodiment 1. In addition, as shown FIG. 8, the first piezoelectric element 23 and the heating element 26 in the atomizer 9 can be omitted, an additional second piezoelectric element 35 in the form of platen with a single layer or multiple laminated layers can be arranged in the atomization cavity, and the stream passing through the ejection hole vibrates the focus at the center of the second piezoelectric element 35 to achieve the effect of strong ultrasonic atomization.

As shown in FIG. 10, a silicon gel check valve 31 may cover the outside of the through hole on the vapor-liquid separator 7. During smoking, a stream reaches the through hole, as the air pressure in the through hole increases, the silicon gel check valve 31 is opened and the stream passes; otherwise, the silicon gel check valve 31 is closed.

As shown in FIG. 5, the sensor 6 may also be designed into a structure with the

Logic Tech. Development LLC EXHIBIT 1004 PAGE 0011

silicon gel check valve 31. During smoking, the stream comes into the silicon gel check valve 31, the air pressure increases and the air expands, the third magnetic steel 34 in the valve approaches the Reed switch 19 gradually until the Reed switch is closed and the circuit is turned on, and the air outlet of the silicon gel check valve 31 is opened with the increment of the air pressure difference. The Reed switch 19 can also be made of Hall device or magneto diode or magneto triode instead.

Embodiment 2

As shown in FIG. 2, to improve the liquid-supplying state, the atomizer 9 is postposed within the shell 14, and the liquid-supplying bottle 11 is arranged between the vapor-liquid separator 7 and the atomizer 9. A spring piece 33 for pressing the liquid-supplying bottle 11 on the atomizer 9 is provided on one end of the liquid-supplying bottle 11. Other components and their functions are the same as those in the embodiment 1.

On the inner wall of the shell 14 of the electronic atomization cigarette described in the embodiment 1 and 2, a digital display screen 32 for showing the smoking times per day and the cell capacity can be also provided. The sensor 6 uses a linear signal output, which is proportional to the suction force (i.e., the stronger one sucks, the longer the time of operation is), the atomizer 9 operates in the linear mode, thereby simulating a humanized cigarette that looks like a normal cigarette.

Within the shell 14, the microswitch 16 is connected to the sensor 6 in parallel and used for manually cleaning. When users do not smoke, they press the microswitch 16 to start the sensor 6 connected therewith in parallel, or clean the residue or other impurity substances within the shell 14.

The nicotine solution for atomization contains 0.4-3.5% nicotine, 0.05-2% cigarette essence, 0.1-3.1% organic acid, 0.1-0.5% anti-oxidation agent, and the rest is 1,2-propylene glycol.

Logic Tech. Development LLC EXHIBIT 1004 PAGE 0012

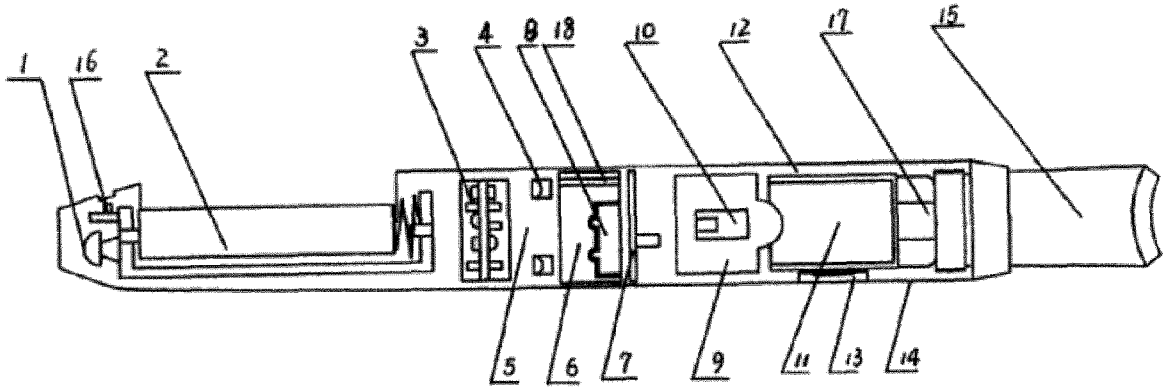

FIG. 1

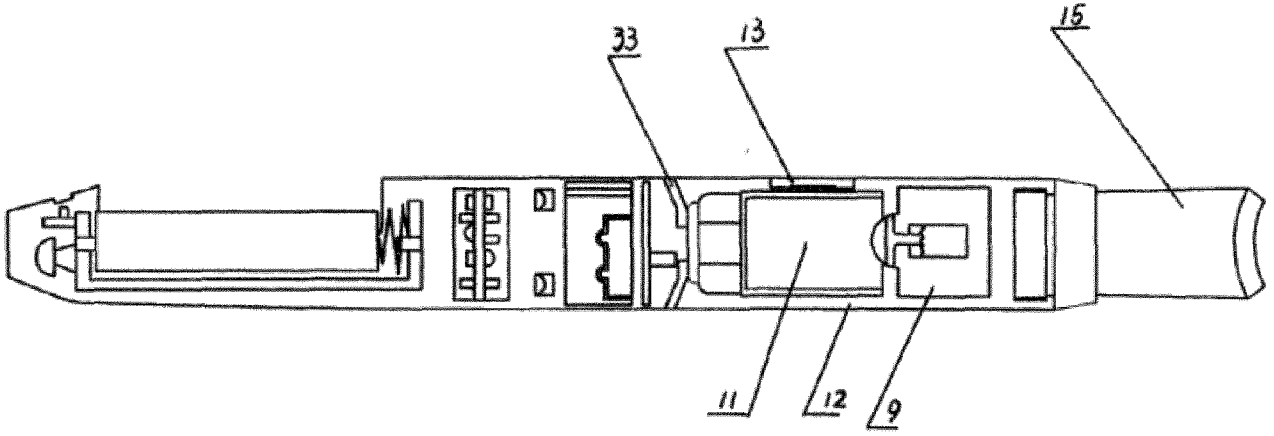

FIG. 2

Logic Tech. Development LLC EXHIBIT 1004 PAGE 0013

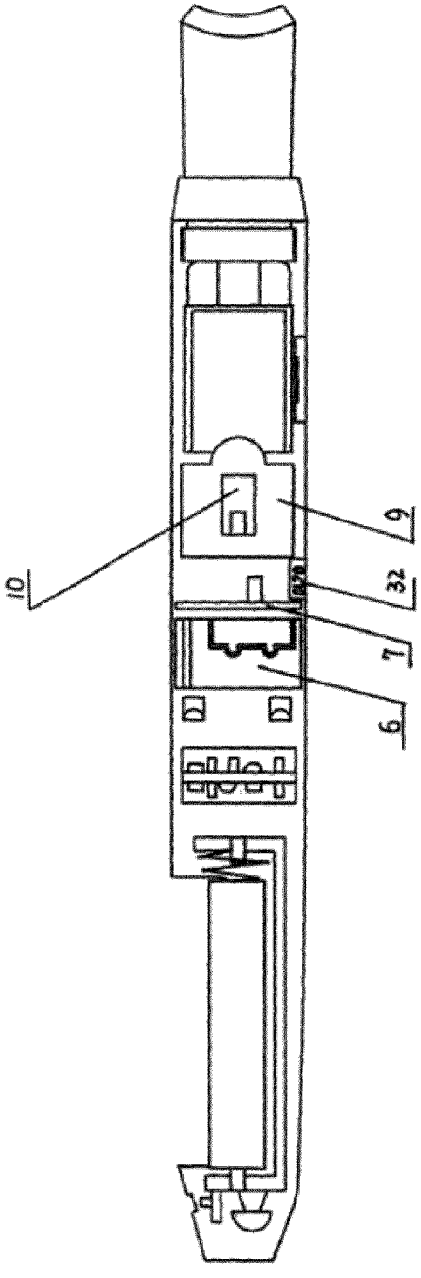

FIG. 3

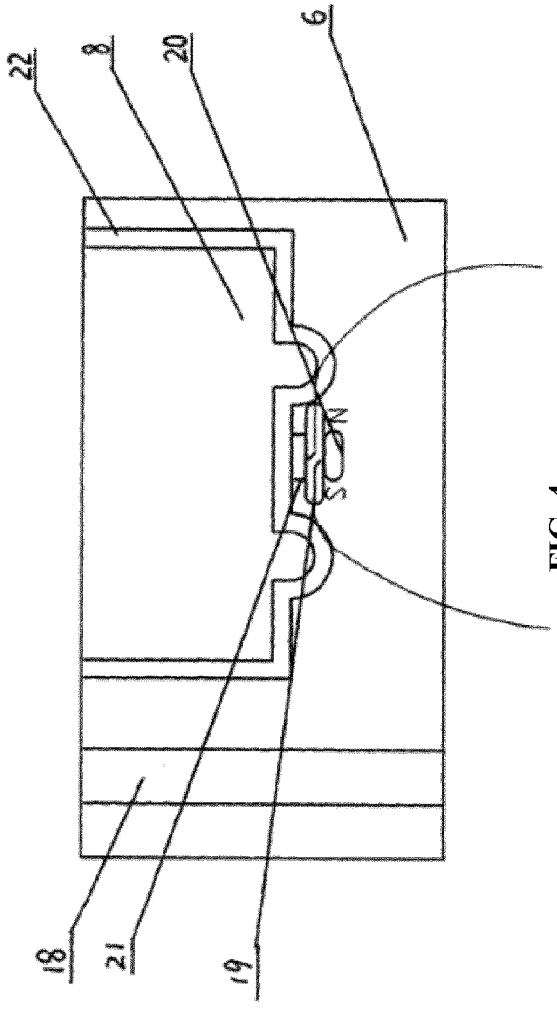

FIG. 4

Logic Tech. Development LLC EXHIBIT 1004 PAGE 0014

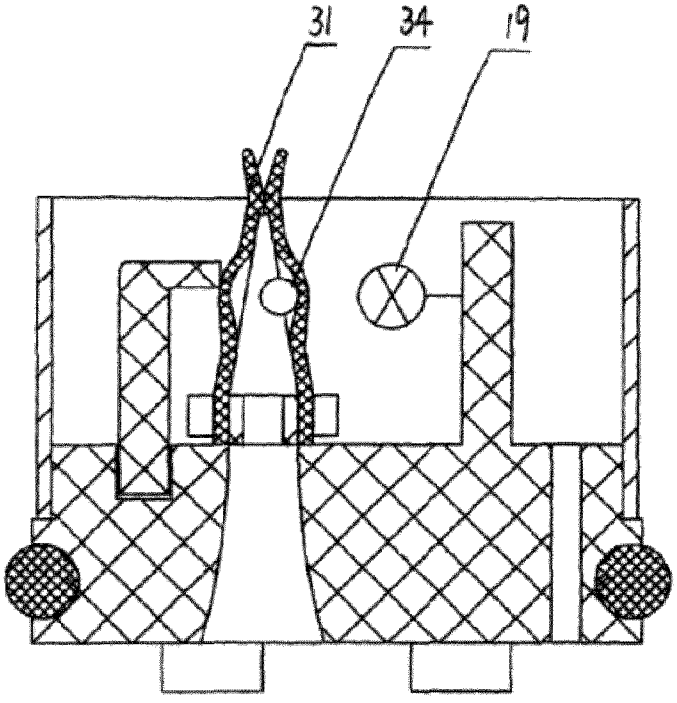

FIG. 5

Logic Tech. Development LLC EXHIBIT 1004 PAGE 0015

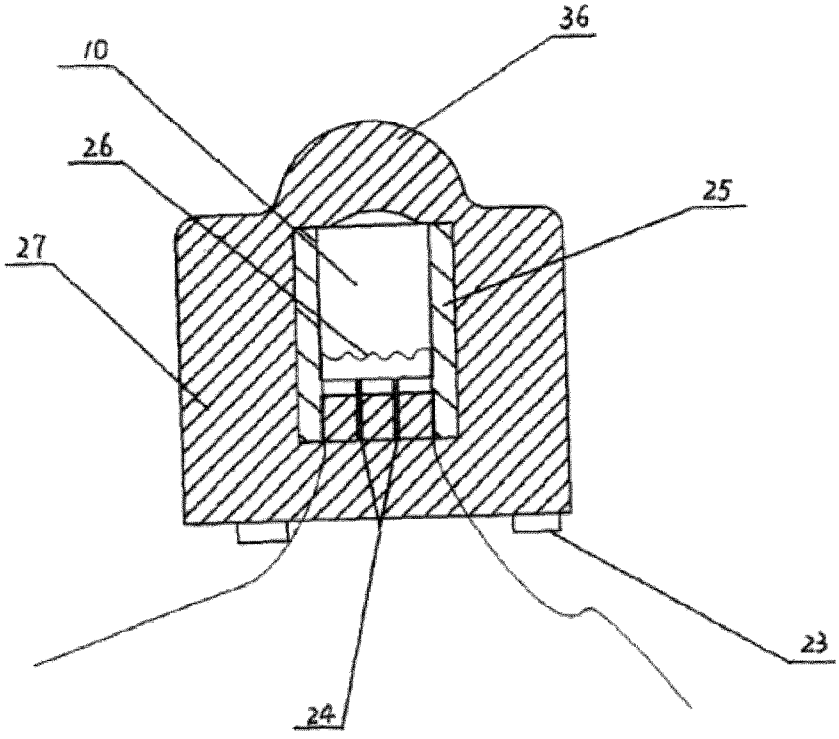

FIG. 6

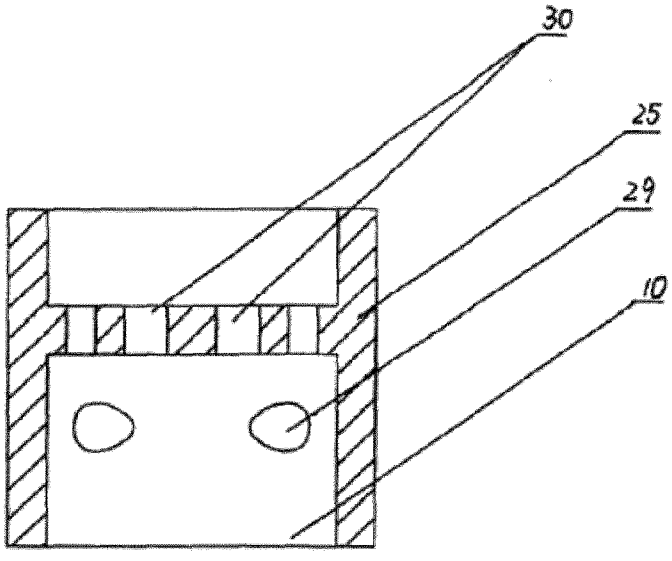

FIG. 7

Logic Tech. Development LLC EXHIBIT 1004 PAGE 0016

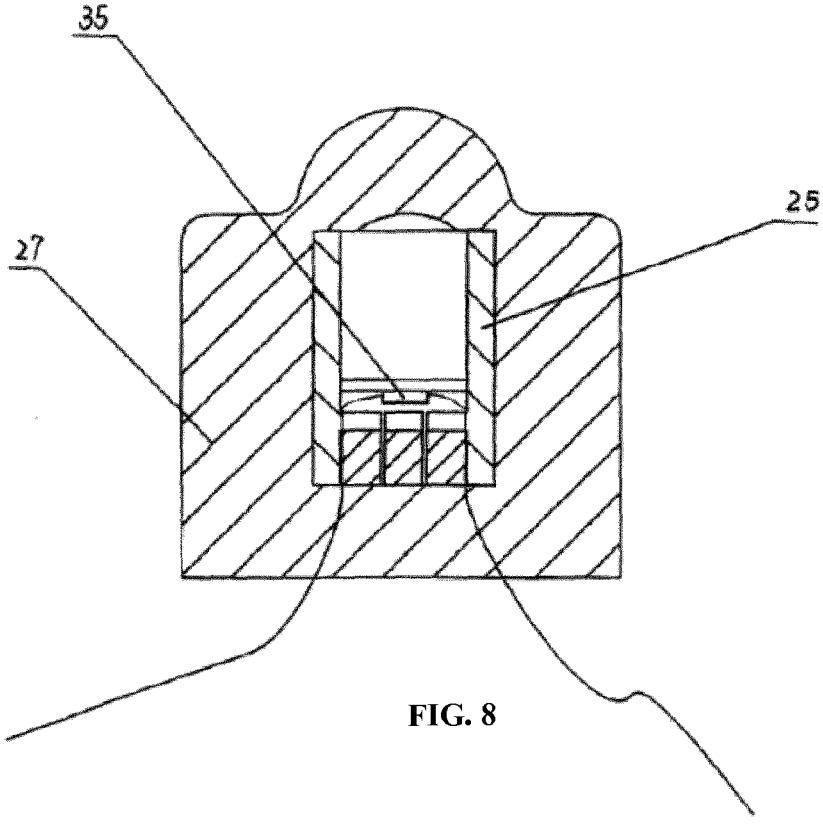

FIG. 8

Logic Tech. Development LLC EXHIBIT 1004 PAGE 0017

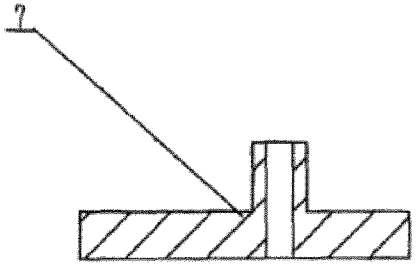

FIG. 9

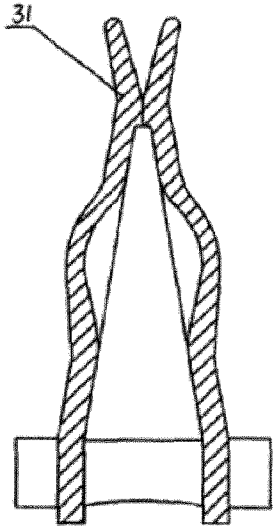

FIG. 10

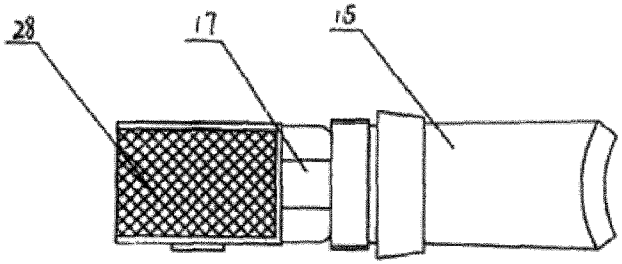

FIG. 11

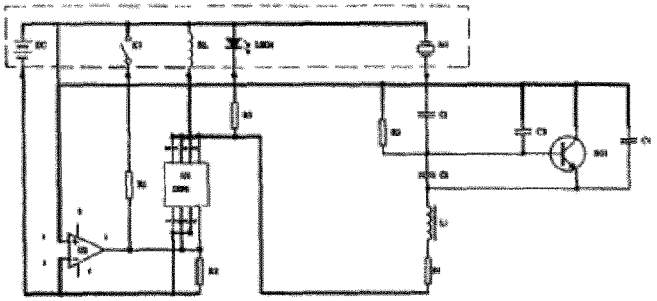

FIG. 12

Logic Tech. Development LLC EXHIBIT 1004 PAGE 0018

Morningside Translations

TRANSLATOR CERTIFICATION

450 7th Avenue
10th Floor
New York, NY 10123
Tel 212.643.8800
Fax 212.643.0005
www.morningtrans.com

County of New York
State of New York

Date: October 8, 2014

To whom it may concern:

I, Jane Wei, a translator fluent in the Chinese and English languages, on behalf of Morningside Translations, do solemnly and sincerely declare that the following is, to the best of my knowledge and belief, a true and correct translation of the document(s) listed below in a form that best reflects the intention and meaning of the original text.

The documents are designated as:

- Hon CN2719043Y (2)

Signature

Jane Wei

Print