US008079371B2

(12) **United States Patent**
Robinson et al.

(10) **Patent No.: US 8,079,371 B2**
(45) **Date of Patent: *Dec. 20, 2011**

(54) **TOBACCO CONTAINING SMOKING ARTICLE**

(75) Inventors: **John Howard Robinson**, Kernersville, NC (US); **David William Griffith, Jr.**, Winston-Salem, NC (US); **Billy Tyrone Conner**, Clemmons, NC (US); **Evon Llewellyn Crooks**, Mocksville, NC (US); **Dempsey Bailey Brewer, Jr.**, East Bend, NC (US)

(73) Assignee: **R.J. Reynolds Tobacco Company**, Winston-Salem, NC (US)

(*) Notice: Subject to any disclaimer, the term of this patent is extended or adjusted under 35 U.S.C. 154(b) by 0 days.

This patent is subject to a terminal disclaimer.

(21) Appl. No.: **12/763,890**

(22) Filed: **Apr. 20, 2010**

(65) **Prior Publication Data**

US 2010/0200006 A1 Aug. 12, 2010

Related U.S. Application Data

(63) Continuation of application No. 11/550,634, filed on Oct. 18, 2006, now Pat. No. 7,726,320.

(51) **Int. Cl.**
A24D 1/04 (2006.01)
A24D 3/00 (2006.01)

(52) **U.S. Cl.** **131/200**; 131/194; 131/273; 131/359; 131/360; 131/331

(58) **Field of Classification Search** ..... None
See application file for complete search history.

(56) **References Cited**

U.S. PATENT DOCUMENTS

3,258,015 A 6/1966 Ellis et al.
3,356,094 A 12/1967 Ellis et al.
3,486,508 A * 12/1969 Sipos 131/336
3,516,417 A 6/1970 Moses
3,614,956 A 10/1971 Thornton
3,738,374 A 6/1973 Bennett

(Continued)

FOREIGN PATENT DOCUMENTS

EP 0 430 559 A2 6/1991

(Continued)

OTHER PUBLICATIONS

Lu, Zhang, "Safe Substitute", *China Daily*, Jul. 11, 2005.

(Continued)

Primary Examiner — Richard Crispino
Assistant Examiner — Phu Nguyen
(74) *Attorney, Agent, or Firm* — Womble Carlyle Sandridge & Rice LLP

(57) **ABSTRACT**

A smoking article may include a cigarette incorporated within an electrically powered aerosol generating device that acts as a holder for that cigarette. The smoking article possesses at least one form of tobacco. The smoking article also possesses a mouth-end piece that is used by the smoker to inhale components of tobacco that are generated by the action of heat upon components of the cigarette. A representative smoking article possesses an outer housing incorporating a source of electrical power (e.g., a battery), a sensing mechanism for powering the device at least during periods of draw, and a heating device (e.g., at least one electrical resistance heating element) for forming a thermally generated aerosol that incorporates components of tobacco. During use, the cigarette is positioned within the device, and after use, the used cigarette is removed from the device and replaced with another cigarette.

36 Claims, 5 Drawing Sheets

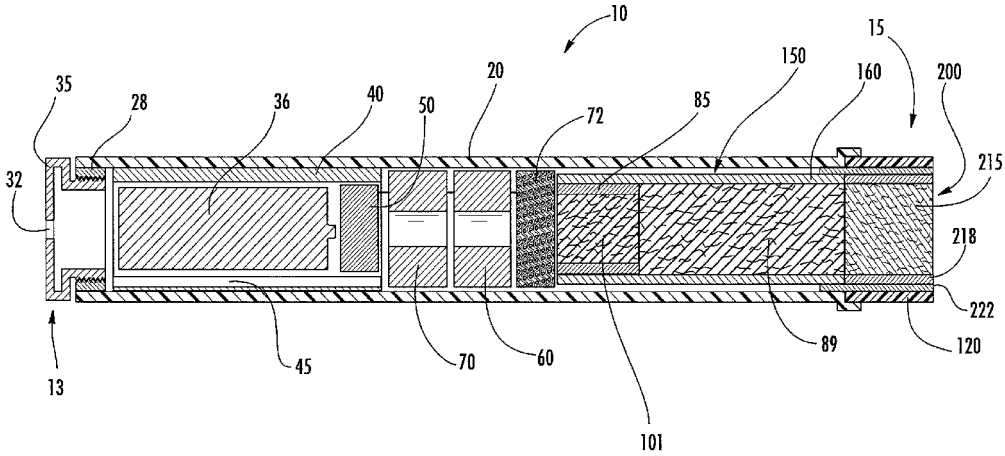

U.S. PATENT DOCUMENTS

3,766,000 A * 10/1973 Gibson et al. 428/368
3,844,294 A 10/1974 Webster
3,878,850 A 4/1975 Gibson et al.
3,931,824 A 1/1976 Miano et al.
3,943,941 A 3/1976 Boyd et al.
4,044,777 A 8/1977 Boyd et al.
4,079,742 A 3/1978 Rainer et al.
4,190,046 A 2/1980 Virag
4,219,031 A 8/1980 Rainer et al.
4,233,993 A 11/1980 Miano et al.
4,284,089 A 8/1981 Ray
4,286,604 A 9/1981 Ehretsmann et al.
4,326,544 A 4/1982 Hardwick et al.
4,340,072 A 7/1982 Bolt et al.
4,347,855 A 9/1982 Lanzillotti et al.
4,391,285 A 7/1983 Burnett et al.
4,635,651 A 1/1987 Jacobs
4,700,727 A 10/1987 Torigian
4,714,082 A 12/1987 Banerjee et al.
4,735,217 A 4/1988 Gerth et al.
4,756,318 A 7/1988 Clearman et al.
4,771,795 A 9/1988 White et al.
4,793,365 A 12/1988 Sensabaugh, Jr. et al.
4,800,903 A 1/1989 Ray et al.
4,807,809 A 2/1989 Pryor et al.
4,819,665 A 4/1989 Roberts et al.
4,823,817 A 4/1989 Luke
4,836,225 A 6/1989 Sudoh
4,848,374 A 7/1989 Chard et al.
4,874,000 A 10/1989 Tamol et al.
4,892,109 A 1/1990 Strubel
4,893,639 A 1/1990 White
4,917,121 A 4/1990 Riehl et al.
4,917,128 A 4/1990 Clearman et al.
4,920,990 A 5/1990 Lawrence et al.
4,924,886 A 5/1990 Litzinger
4,947,874 A 8/1990 Brooks et al.
4,961,438 A 10/1990 Korte
4,966,171 A 10/1990 Serrano et al.
4,969,476 A 11/1990 Bale et al.
4,972,855 A 11/1990 Kuriyama et al.
4,977,908 A 12/1990 Luke
4,981,522 A 1/1991 Nichols et al.
4,991,606 A 2/1991 Serrano et al.
5,020,548 A 6/1991 Farrier et al.
5,025,814 A 6/1991 Raker
5,033,483 A * 7/1991 Clearman et al. 131/194
5,040,551 A 8/1991 Schlatter et al.
5,046,514 A 9/1991 Bolt
5,050,621 A 9/1991 Creighton et al.
5,060,667 A 10/1991 Strubel
5,060,671 A 10/1991 Counts et al.
5,060,676 A 10/1991 Hearn et al.
5,065,776 A 11/1991 Lawson et al.
5,072,744 A 12/1991 Luke et al.
5,074,321 A 12/1991 Gentry et al.
5,076,296 A 12/1991 Nystrom et al.
5,076,297 A 12/1991 Farrier et al.
5,092,353 A 3/1992 Montoya et al.
5,099,861 A 3/1992 Clearman et al.
5,101,839 A 4/1992 Jakob et al.
5,105,835 A 4/1992 Drewett et al.
5,105,836 A 4/1992 Gentry et al.
5,105,837 A 4/1992 Barnes et al.
5,105,838 A 4/1992 White et al.
5,115,820 A 5/1992 Hauser et al.
5,144,962 A 9/1992 Counts et al.
5,146,934 A 9/1992 Deevi et al.
5,148,821 A 9/1992 Best et al.
5,159,940 A 11/1992 Hayward et al.
5,159,942 A 11/1992 Brinkley et al.
5,178,167 A 1/1993 Riggs et al.
5,183,062 A 2/1993 Clearman et al.
5,203,355 A 4/1993 Clearman et al.
5,211,684 A 5/1993 Shannon et al.
5,224,498 A 7/1993 Deevi et al.
5,240,014 A 8/1993 Deevi et al.
5,240,016 A 8/1993 Nichols et al.
5,271,419 A 12/1993 Arzonico et al.
5,285,798 A 2/1994 Banerjee et al.
5,293,883 A 3/1994 Edwards
5,327,917 A 7/1994 Lekwauwa et al.
5,345,955 A 9/1994 Clearman et al.
5,357,984 A 10/1994 Farrier et al.
5,360,023 A 11/1994 Blakley et al.
5,369,723 A 11/1994 Counts et al.
5,388,574 A 2/1995 Ingebrethsen
5,396,911 A 3/1995 Casey, III et al.
5,533,530 A 7/1996 Young et al.
5,551,451 A 9/1996 Riggs et al.
5,588,446 A 12/1996 Clearman
5,593,792 A 1/1997 Farrier et al.
5,595,577 A 1/1997 Bensalem et al.
5,598,868 A 2/1997 Jakob et al.
5,692,525 A 12/1997 Counts et al.
5,715,844 A 2/1998 Young et al.
5,743,251 A 4/1998 Howell et al.
5,778,899 A 7/1998 Saito et al.
5,799,663 A 9/1998 Gross et al.
5,819,751 A 10/1998 Barnes et al.
5,829,453 A 11/1998 White et al.
5,865,185 A 2/1999 Collins et al.
5,878,752 A 3/1999 Adams et al.
5,880,439 A 3/1999 Deevi et al.
5,915,387 A 6/1999 Baggett, Jr. et al.
5,934,289 A 8/1999 Watkins et al.
6,033,623 A 3/2000 Deevi et al.
6,053,176 A 4/2000 Adams et al.
6,089,857 A 7/2000 Matsuura et al.
6,095,152 A 8/2000 Beven et al.
6,146,934 A 11/2000 Gardner et al.
6,164,287 A 12/2000 White
6,182,670 B1 2/2001 White et al.
6,234,167 B1 5/2001 Cox et al.
6,289,898 B1 9/2001 Fournier et al.
6,397,852 B1 6/2002 McAdam
6,408,856 B1 6/2002 McAdam
6,516,796 B1 2/2003 Cox et al.
6,532,965 B1 3/2003 Abhulimen et al.
6,537,186 B1 3/2003 Veluz
6,578,584 B1 6/2003 Beven et al.
6,591,841 B1 7/2003 White et al.
6,598,607 B2 7/2003 Adiga et al.
6,615,840 B1 9/2003 Fournier et al.
6,730,832 B1 5/2004 Dominguez et al.
6,823,873 B2 11/2004 Nichols et al.
7,117,867 B2 10/2006 Cox et al.
2003/0131859 A1 7/2003 Li et al.
2004/0173229 A1 9/2004 Crooks et al.
2005/0016549 A1 1/2005 Banerjee et al.
2005/0066986 A1 3/2005 Nestor et al.
2006/0185687 A1 8/2006 Hearn et al.
2006/0196518 A1 9/2006 Hon
2007/0062549 A1 3/2007 Holton, Jr. et al.
2007/0267031 A1 11/2007 Hon

FOREIGN PATENT DOCUMENTS

EP 1 618 803 A1 1/2006
GB 755475 8/1956
GB 1 431 045 4/1976
GB 2 070 409 9/1981
RO 101966 A * 8/1991
WO WO 98/16125 4/1998
WO WO 02/37990 A2 5/2002
WO WO 2004/095955 A1 3/2004
WO WO 2004/080216 A1 9/2004
WO WO 2005/099494 A1 3/2005

OTHER PUBLICATIONS

Chemical and Biological Studies on New Cigarette Prototypes that Heat Instead of Burn Tobacco, R. J. Reynolds Tobacco Company Monograph, 1988, pp. 43-72.

Inhalation Technology, Dr. Donald E. Garden, ed., vol. 12, No. 5, pp. 1-58, (2000).

* cited by examiner

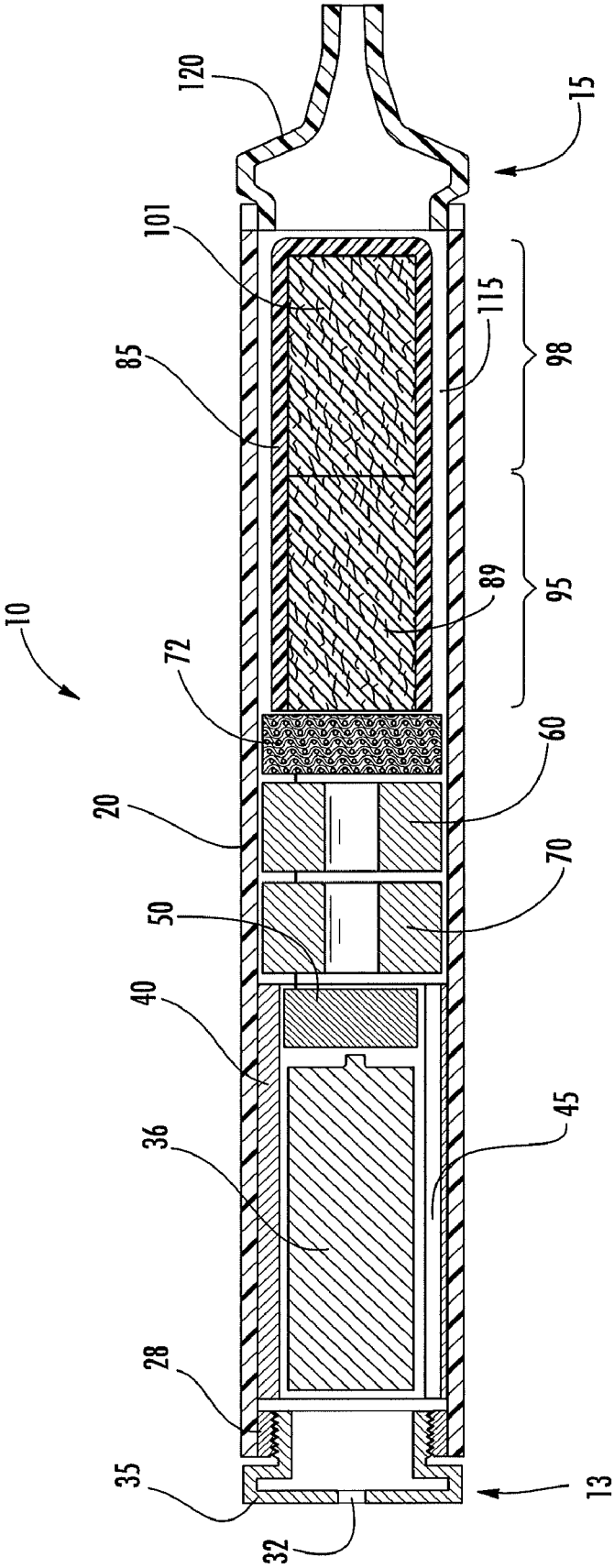

FIG. 1

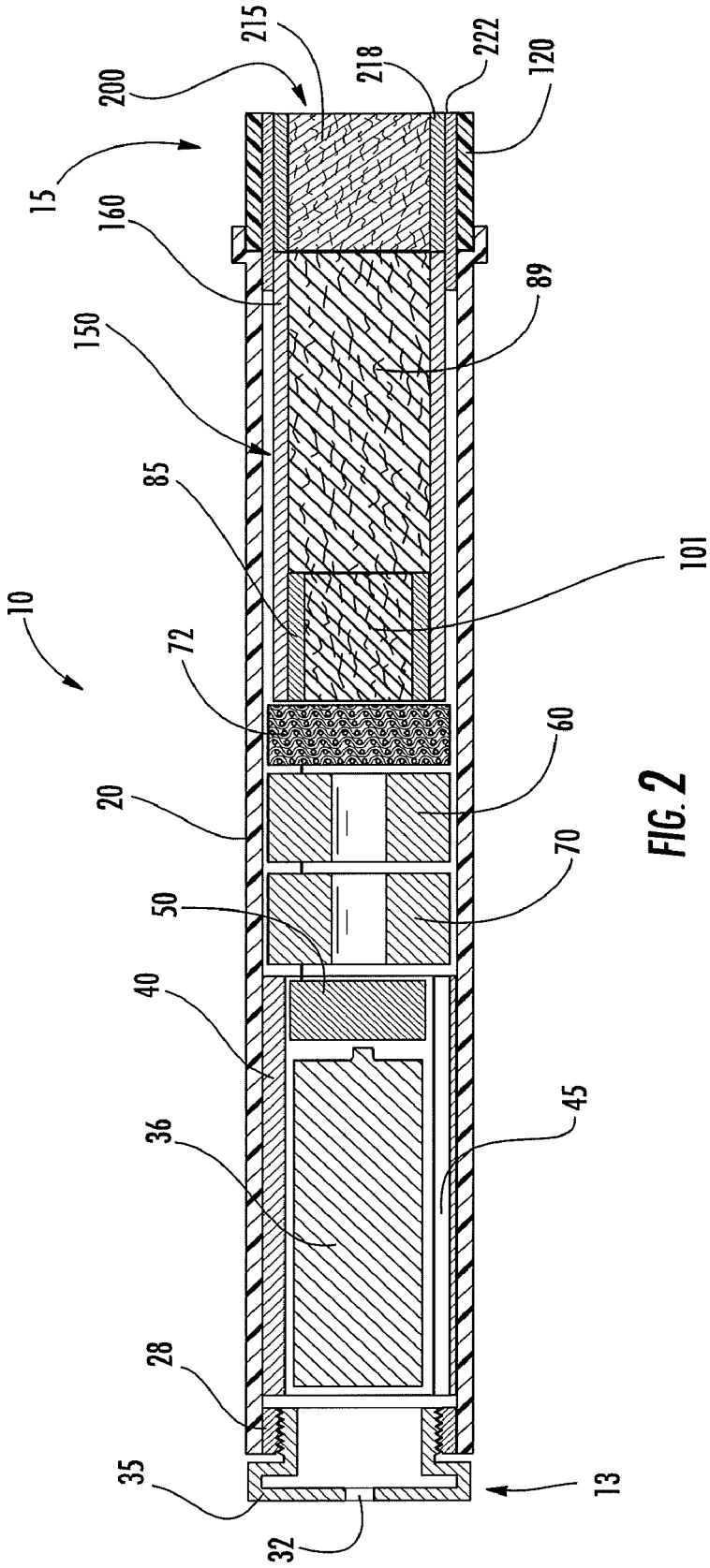
10
15
200
215
218
222
120
160
150
89
85
101
72
60
20
70
50
40
45
36
28
35
32
13

FIG. 2

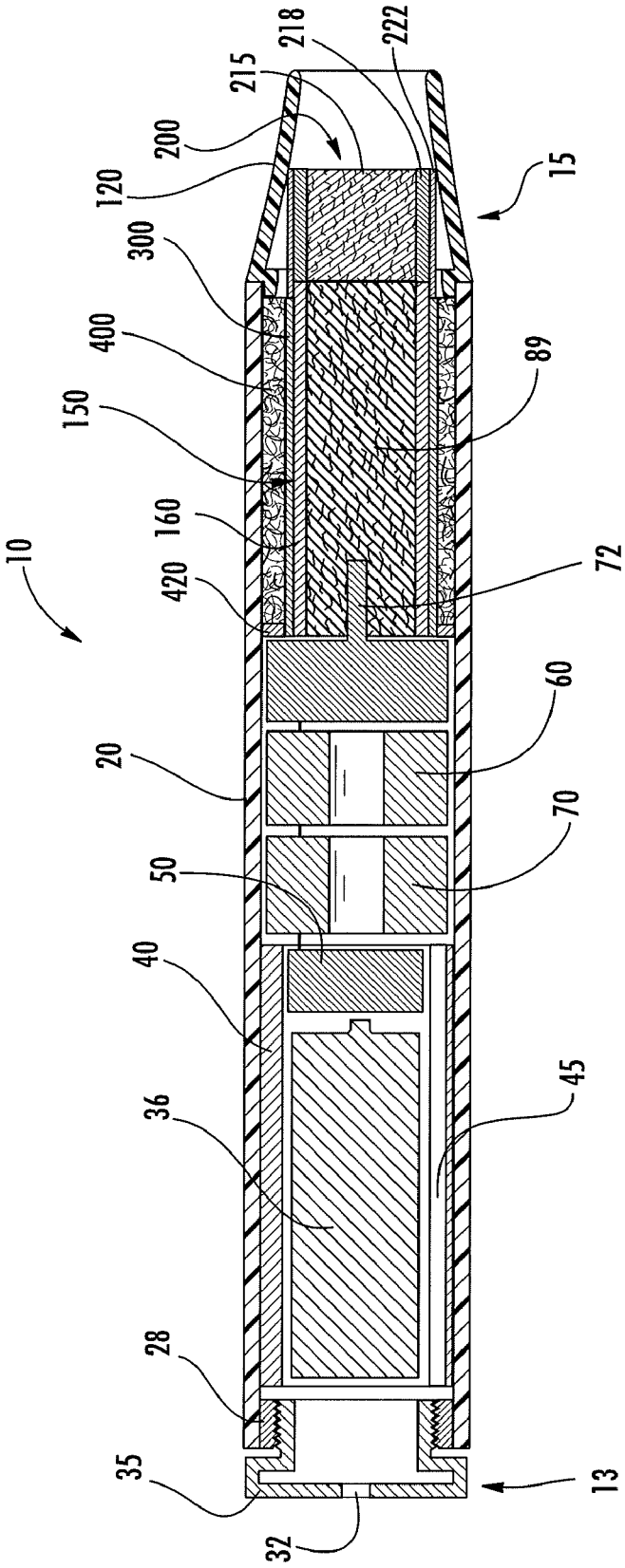
218
222
215
200
120
15
300
400
89
150
160
10
420
72
60
20
70
50
40
45
36
28
35
13
32

FIG. 3

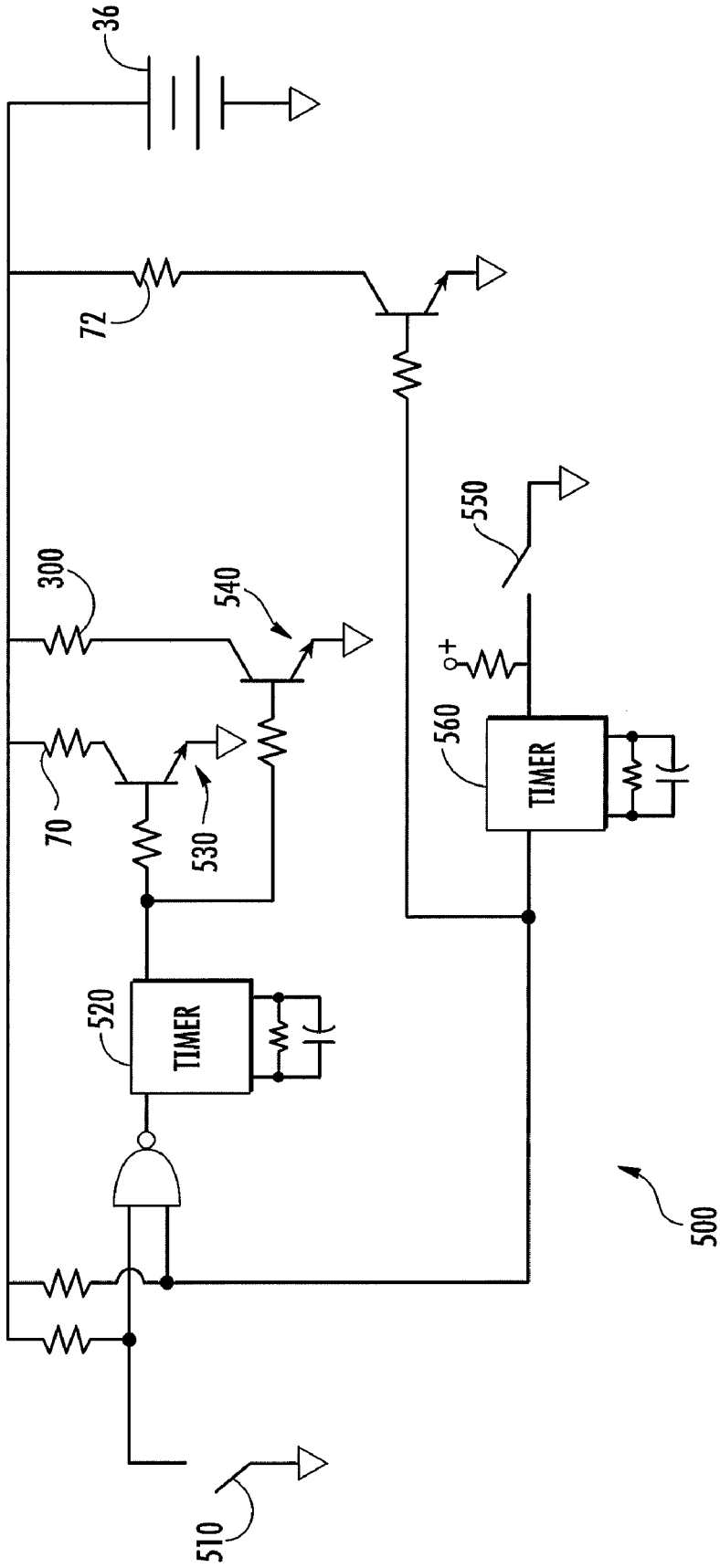

FIG. 4

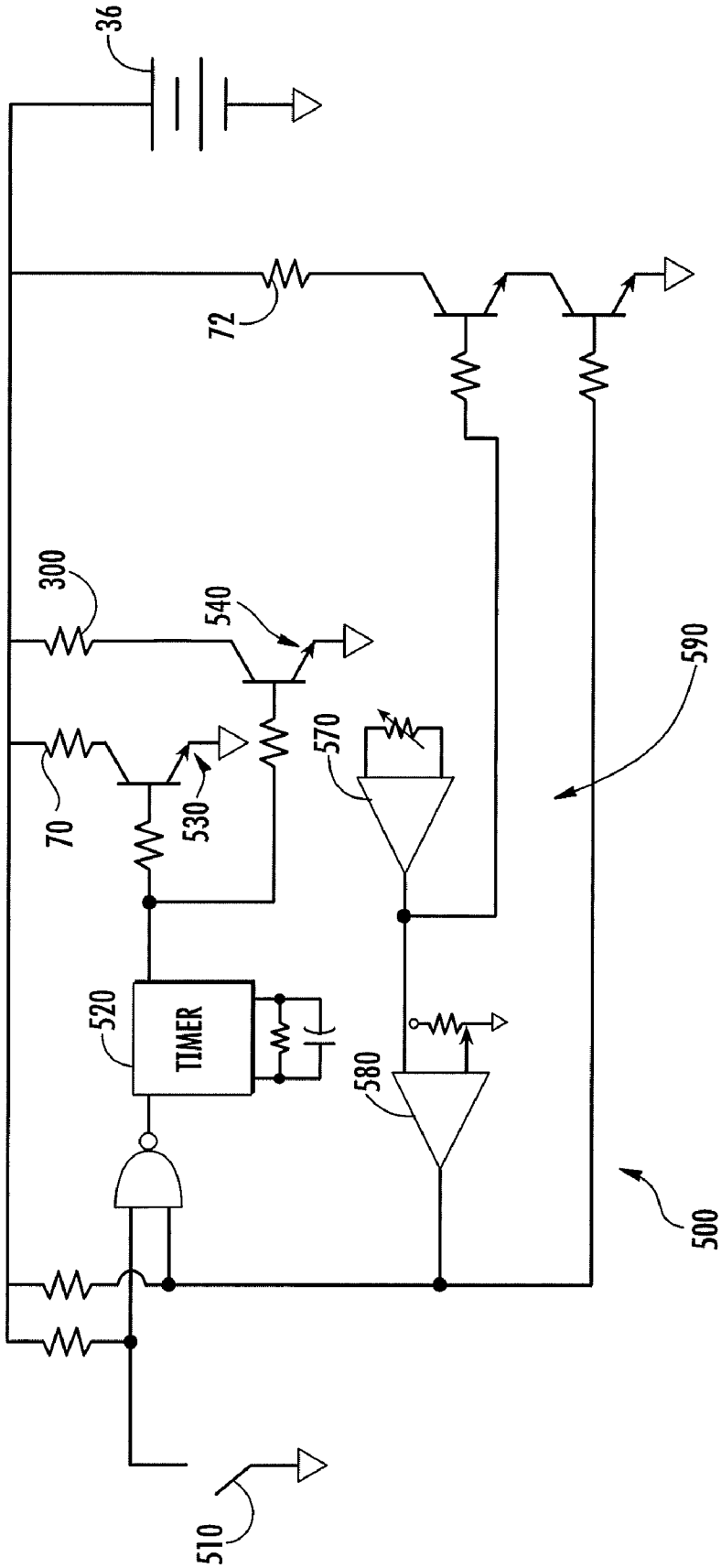

FIG. 5

TOBACCO CONTAINING SMOKING ARTICLE

CROSS REFERENCE TO RELATED APPLICATIONS

This application is a continuation of U.S. application Ser. No. 11/550,634, filed on Oct. 18, 2006 now U.S. Pat. No. 7,726,320, which is incorporated by reference herein in its entirety.

FIELD OF THE INVENTION

The present invention relates to tobacco products, such as tobacco-containing smoking articles.

BACKGROUND OF THE INVENTION

Popular smoking articles, such as cigarettes, have a substantially cylindrical rod shaped structure and include a charge, roll, or column of smokable material, such as shredded tobacco (e.g., in cut filler form), surrounded by a paper wrapper, thereby forming a so-called "smokable rod" or "tobacco rod." Normally, a cigarette has a cylindrical filter element aligned in an end-to-end relationship with the tobacco rod. Preferably, a filter element comprises plasticized cellulose acetate tow circumscribed by a paper material known as "plug wrap." Certain filter elements can incorporate polyhydric alcohols. See, for example, UK Pat. Spec. 755, 475. Certain cigarettes incorporate a filter element having multiple segments, and one of those segments can comprise activated charcoal particles. See, for example, U.S. Pat. No. 5,360,023 to Blakley et al. and U.S. Pat. No. 6,537,186 to Veluz. Preferably, the filter element is attached to one end of the tobacco rod using a circumscribing wrapping material known as "tipping paper." It also has become desirable to perforate the tipping material and plug wrap, in order to provide dilution of drawn mainstream smoke with ambient air. Descriptions of cigarettes and the various components thereof are set forth in *Tobacco Production, Chemistry and Technology*, Davis et al. (Eds.) (1999). Traditionally, a cigarette of the most popular type is employed by a smoker by lighting one end thereof and burning the tobacco rod. The smoker then receives mainstream smoke produced by the burning tobacco into his/her mouth by drawing on the opposite end (e.g., the filter end) of the cigarette.

Through the years, various methods for altering the composition of mainstream tobacco smoke have been proposed. In PCT Appl. Pub. No. WO 02/37990 to Bereman, it has been suggested that metallic particles and/or carbonaceous particles can be incorporated into the smokable material of a cigarette in an attempt to reduce the amounts of certain compounds in the smoke produced by that cigarette. In US Patent Appl. Pub. No. 2005/0066986 to Nestor et al., it has been suggested that a smokable rod possessing tobacco wrapped in paper can incorporate tobacco filler combined with an aerosol-forming material, such as glycerin. U.S. Pat. No. 6,874,508 to Shafer et al. proposes a cigarette having a paper wrapped tobacco rod having a tip portion that is treated with an additive, such as potassium bicarbonate, sodium chloride or potassium phosphate.

Various tobacco substitute materials have been proposed, and substantial listings of various types of those materials can be found in U.S. Pat. No. 4,079,742 to Rainer et al. and U.S. Pat. No. 4,771,795 to White et al. Certain cigarette-type products that employ non-tobacco materials (e.g., dried vegetable leaves, such as lettuce leaves) as filler that is burned to produce smoke that resembles tobacco smoke have been marketed under the trade names "Cubebs," "Triumph," "Jazz," and "Bravo." See, for example, the types of materials described in U.S. Pat. No. 4,700,727 to Torigian. Furthermore, tobacco substitute materials having the trade names "Cytrel" and "NSM" were introduced in Europe during the 1970. Representative types of proposed synthetic tobacco substitute materials, smokable materials incorporating tobacco and other components, and cigarettes incorporating those materials, are described in British Pat. No. 1,431,045; and U.S. Pat. No. 3,738,374 to Bennett; U.S. Pat. No. 3,844,294 to Webster; U.S. Pat. No. 3,878,850 to Gibson et al.; U.S. Pat. No. 3,931,824 to Miano et al.; U.S. Pat. No. 3,943,941 to Boyd et al.; U.S. Pat. No. 4,044,777 to Boyd et al.; U.S. Pat. No. 4,233,993 to Miano et al.; U.S. Pat. No. 4,286,604 to Ehretsmann et al.; U.S. Pat. No. 4,326,544 to Hardwick et al.; U.S. Pat. No. 4,920,990 to Lawrence et al.; U.S. Pat. No. 5,046,514 to Bolt; U.S. Pat. No. 5,074,321 to Gentry et al.; U.S. Pat. No. 5,092,353 to Montoya et al.; U.S. Pat. No. 5,778,899 to Saito et al.; U.S. Pat. No. 6,397,852 to McAdam; and U.S. Pat. No. 6,408,856 to McAdam. Furthermore, various types of highly processed smokable materials incorporating tobacco and other ingredients are set forth in U.S. Pat. No. 4,823,817 to Luke; U.S. Pat. No. 4,874,000 to Tamol et al.; U.S. Pat. No. 4,977,908 to Luke; U.S. Pat. No. 5,072,744 to Luke et al.; U.S. Pat. No. 5,829,453 to White et al.; and U.S. Pat. No. 6,182,670 to White et al.

Certain types of coaxial or concentric-type smoking articles have been proposed. There have been proposed cigarette-type smoking articles including tobacco smokable materials surrounding longitudinally extending cores of other materials. UK Pat. Appl. 2,070,409 proposes a smoking article having a rod of smoking material having at least one filament extending over at least a major portion of the length of the rod. U.S. Pat. No. 3,614,956 to Thornton proposes a smoking article having an annular outer portion made of tobacco smoking material and a central cylindrical core of absorbent material. U.S. Pat. No. 4,219,031 to Rainer et al. proposes a smoking article having a central core of carbonized fibers circumscribed by tobacco. U.S. Pat. No. 6,823,873 to Nichols et al. proposes a cigarette including an ignition element surrounded by tobacco, which is in turn surrounded by a composite outer wrapper. One type of cigarette-type smoking article has included a rod of tobacco smokable material surrounded a longitudinally extending annulus of some other material. For example, U.S. Pat. No. 5,105,838 to White et al. proposes a rod of smokable material, normally circumscribed by a layer of wrapping material, which is in turn circumscribed by an insulating material (e.g., glass filaments or fibers). PCT Appl. Pub. No. WO 98/16125 to Snaidr et al. proposes a smoking device constructed from a very thin cigarette designed to fit into a tubular ceramic cartridge.

Numerous references have proposed various smoking articles of a type that generate flavored vapor, visible aerosol, or a mixture of flavored vapor and visible aerosol. Some of those proposed types of smoking articles include tubular sections or longitudinally extending air passageways. See, for example, those types of smoking articles described in U.S. Pat. No. 3,258,015 to Ellis et al.; U.S. Pat. No. 3,356,094 to Ellis et al.; U.S. Pat. No. 3,516,417 to Moses; U.S. Pat. No. 4,347,855 to Lanzellotti et al.; U.S. Pat. No. 4,340,072 to Bolt et al.; U.S. Pat. No. 4,391,285 to Burnett et al.; U.S. Pat. No. 4,917,121 to Riehl et al.; U.S. Pat. No. 4,924,886 to Litzinger; and U.S. Pat. No. 5,060,676 to Hearn et al. Many of those types of smoking articles have employed a combustible fuel source that is burned to provide an aerosol and/or to heat an aerosol-forming material. See, for example, the background

art cited in U.S. Pat. No. 4,714,082 to Banerjee et al. and U.S. Pat. No. 4,771,795 to White et al.; which are incorporated herein by reference. See, also, for example, those types of smoking articles described in U.S. Pat. No. 4,756,318 to Clearman et al.; U.S. Pat. No. 4,714,082 to Banerjee et al.; U.S. Pat. No. 4,771,795 to White et al.; U.S. Pat. No. 4,793,365 to Sensabaugh et al.; U.S. Pat. No. 4,917,128 to Clearman et al.; U.S. Pat. No. 4,961,438 to Korte; U.S. Pat. No. 4,966,171 to Serrano et al.; U.S. Pat. No. 4,969,476 to Bale et al.; U.S. Pat. No. 4,991,606 to Serrano et al.; U.S. Pat. No. 5,020,548 to Farrier et al.; U.S. Pat. No. 5,033,483 to Clearman et al.; U.S. Pat. No. 5,040,551 to Schlatter et al.; U.S. Pat. No. 5,050,621 to Creighton et al.; U.S. Pat. No. 5,065,776 to Lawson; U.S. Pat. No. 5,076,296 to Nystrom et al.; U.S. Pat. No. 5,076,297 to Farrier et al.; U.S. Pat. No. 5,099,861 to Clearman et al.; U.S. Pat. No. 5,105,835 to Drewett et al.; U.S. Pat. No. 5,105,837 to Barnes et al.; U.S. Pat. No. 5,115,820 to Hauser et al.; U.S. Pat. No. 5,148,821 to Best et al.; U.S. Pat. No. 5,159,940 to Hayward et al.; U.S. Pat. No. 5,178,167 to Riggs et al.; U.S. Pat. No. 5,183,062 to Clearman et al.; U.S. Pat. No. 5,211,684 to Shannon et al.; U.S. Pat. No. 5,240,014 to Deevi et al.; U.S. Pat. No. 5,240,016 to Nichols et al.; U.S. Pat. No. 5,345,955 to Clearman et al.; U.S. Pat. No. 5,551,451 to Riggs et al.; U.S. Pat. No. 5,595,577 to Bensalem et al.; U.S. Pat. No. 5,819,751 to Barnes et al.; U.S. Pat. No. 6,089,857 to Matsuura et al.; U.S. Pat. No. 6,095,152 to Beven et al; U.S. Pat. No. 6,578,584 Beven; and U.S. Pat. No. 6,730,832 to Dominguez; which are incorporated herein by reference. Furthermore, certain types of cigarettes that employ carbonaceous fuel elements have been commercially marketed under the brand names "Premier" and "Eclipse" by R. J. Reynolds Tobacco Company. See, for example, those types of cigarettes described in *Chemical and Biological Studies on New Cigarette Prototypes that Heat Instead of Burn Tobacco*, R. J. Reynolds Tobacco Company Monograph (1988) and *Inhalation Toxicology,* 12:5, p. 1-58 (2000).

Certain proposed cigarette-shaped tobacco products purportedly employ tobacco in a form that is not intended to be burned. See, for example, U.S. Pat. No. 4,836,225 to Sudoh; U.S. Pat. No. 4,972,855 to Kuriyama et al.; and U.S. Pat. No. 5,293,883 to Edwards; which are incorporated herein by reference. Yet other types of smoking articles, such as those types of smoking articles that generate flavored vapors by subjecting tobacco or processed tobaccos to heat produced from chemical or electrical heat sources, are described in U.S. Pat. No. 4,848,374 to Chard et al.; U.S. Pat. No. 4,947,874 to Brooks et al.; U.S. Pat. No. 5,060,671 to Counts et al.; U.S. Pat. No. 5,146,934 to Deevi et al.; U.S. Pat. No. 5,224,498 to Deevi; U.S. Pat. No. 5,285,798 to Banerjee et al.; U.S. Pat. No. 5,357,984 to Farrier et al.; U.S. Pat. No. 5,593,792 to Farrier et al.; U.S. Pat. No. 5,369,723 to Counts; U.S. Pat. No. 5,692,525 to Counts et al.; U.S. Pat. No. 5,865,185 to Collins et al.; U.S. Pat. No. 5,878,752 to Adams et al.; U.S. Pat. No. 5,880,439 to Deevi et al.; U.S. Pat. No. 5,915,387 to Baggett et al.; U.S. Pat. No. 5,934,289 to Watkins et al.; U.S. Pat. No. 6,033,623 to Deevi et al.; U.S. Pat. No. 6,053,176 to Adams et al.; U.S. Pat. No. 6,164,287 to White; U.S. Pat. No. 6,289,898 to Fournier et al.; U.S. Pat. No. 6,615,840 to Fournier et al.; and U.S. Patent Appl. Pub. Nos. 2003/0131859 to Li et al.; 2005/0016549 to Banerjee et al.; and 2006/0185687 to Hearn et al.; each of which is incorporated herein by reference. One type of smoking article that has employed electrical energy to produce heat has been commercially marketed by Philip Morris Inc. under the brand name "Accord."

Certain attempts have been made to deliver vapors, sprays or aerosols, such as those possessing or incorporating flavors and/or nicotine. See, for example, the types of devices set forth in U.S. Pat. No. 4,190,046 to Virag; U.S. Pat. No. 4,284,089 to Ray; U.S. Pat. No. 4,635,651 to Jacobs; U.S. Pat. No. 4,735,217 to Gerth et al.; U.S. Pat. No. 4,800,903 to Ray et al.; U.S. Pat. No. 5,388,574 to Ingebrethsen et al.; U.S. Pat. No. 5,799,663 to Gross et al.; U.S. Pat. No. 6,532,965 to Abhulimen et al.; and U.S. Pat. No. 6,598,607 to Adiga et al; and EP 1,618,803 to Hon; which are incorporated herein by reference. See also, U.S. Pat. No. 7,117,867 to Cox et al. and the devices set forth on the website, www.e-cig.com, which are incorporated herein by reference.

Smoking articles that employ tobacco substitute materials and smoking articles that employ sources of heat other than burning tobacco cut filler to produce tobacco-flavored vapors or tobacco-flavored visible aerosols have not received widespread commercial success. Thus, it would be highly desirable to provide a smoking article that provides a smoker with an ability to enjoy using tobacco without the necessity of burning any significant amount of tobacco. In particular, it would be highly desirable to provide a tobacco-containing smoking article, such as an article having the general appearance of a cigarette, cigar, or pipe, that possesses the ability to provide to a smoker many of the benefits and advantages of conventional tobacco smoking without necessarily delivering considerable quantities of incomplete combustion and pyrolysis products.

SUMMARY OF THE INVENTION

The present invention relates to smoking articles for providing tobacco enjoyment, as well as manners and methods for providing tobacco enjoyment using such smoking articles. That is, the present invention relates to articles that produce aerosols incorporating components derived from, or provided by, tobacco. Preferred articles produce aerosols that are not necessarily produced as a result of burning of tobacco, but rather, produce an aerosol incorporating components derived from, or provided by, tobacco as a result of the application of heat upon tobacco or materials that are in contact with tobacco. Preferred articles produce visible aerosols that are "smoke-like" in nature, and exhibit many of the sensory characteristics associated with those types of smoking articles that burn tobacco. As a result, the present invention relates to tobacco smoking articles that produce aerosols without experiencing any necessary burning of tobacco or other component materials during periods in which the articles are used. Thus, the present invention relates to smoking articles, and in particular, to smoking articles that incorporates tobacco in some form. Of particular interest is generally rod-shaped smoking articles (e.g., a cigarette, a cigarillo, or a cigar), or smoking articles having shapes comparable to other traditional types of smoking products (e.g., pipes).

A preferred smoking article of the present invention, when smoked, is capable of providing mainstream aerosol that may be characterized as being flavorful and satisfying. Highly preferred cigarettes provide certain of the flavors, sensations and satisfaction of popular cigarettes that burn tobacco cut filler, because those preferred cigarettes generate mainstream aerosol, at least in part, by the action of heat upon some form of tobacco.

In one embodiment, the present invention relates to a cigarette that is smoked by coupling that cigarette to an electrically powered aerosol generating device that acts as a holder for that cigarette. The cigarette possesses at least one form of tobacco, and that tobacco is wrapped in a paper wrapper. If desired, various forms of tobacco, or various forms of tobacco containing compositions, can be positioned at specific locations within the cigarette. The cigarette also incorporates

aerosol-forming material, and that aerosol-forming material can be an ingredient that is employed in addition to the tobacco. The cigarette may also possess a mouth-end piece that is used by the smoker to inhale components of tobacco, components derived from tobacco, and other components, preferably in the form of a visible aerosol, generated at least in part by the action of heat upon components of that cigarette. A representative device possesses a source of electrical power (e.g., a battery), a controller mechanism including a sensor that is capable of selectively powering certain components of the device (e.g., electrical resistance heating elements) at least during periods of draw, and at least one heating device (e.g., an electrical resistance heating unit) for forming a thermally generated aerosol that incorporates components of tobacco. During use, the cigarette is positioned within the outer housing of the smoking article, and after use, the used cigarette is removed from the smoking article. When desired, another cigarette is positioned within the device for further use.

In another embodiment, the present invention relates to a smoking article that is smoked by incorporating that tobacco within an electrically-powered, aerosol-generating device. At least one form of tobacco can be positioned at one or more specific locations within the cigarette. Aerosol-forming material is employed in addition to the tobacco. A mouth-end piece is used by the smoker to inhale components of tobacco that are generated by the action of heat upon components of that smoking article. A representative smoking article possesses a source of electrical power (e.g., a battery), a controller mechanism including a sensor that is capable of selectively powering certain components of the device (e.g., electrical resistance heating elements) at least during periods of draw, and at least one heating device (e.g., an electrical resistance heating unit) for forming a thermally generated aerosol that incorporates components of tobacco. During use, a cartridge containing some form of tobacco is positioned within the smoking article, and after use, the used cartridge is removed from the outer housing of the device. When desired, another cartridge is positioned within the device for further use.

In one preferred embodiment, a tobacco-containing, electrically-powered smoking article is provided, the smoking article comprising:

(a) an outer housing having a mouth-end and an end distal to the mouth-end, wherein the mouth-end comprises an opening adapted for egress of an aerosol generated within the smoking article and the distal end comprises an opening adapted for intake of air into the smoking article;

(b) an electrical power source within the outer housing and operatively positioned downstream of the opening in the distal end of the outer housing such that air entering the smoking article passes the electrical power source;

(c) a first electrical resistance heating element within the outer housing, powered by said electrical power source, and operatively positioned for heating air drawn through the opening in the distal end of the outer housing;

(d) a tobacco material positioned within the outer housing;

(e) an aerosol-forming material positioned within the outer housing in fluid communication with said tobacco material such that air can be drawn through both the tobacco material and the aerosol-forming material;

(f) a second electrical resistance heating element within the outer housing, powered by said electrical power source, and operatively positioned for heating the aerosol-forming material and tobacco material; and

(g) a puff-actuated controller adapted for regulating current flow through at least one of said first and second electrical resistance heating elements during draw, the controller comprising a sensor adapted for sensing draw by the user on the smoking article.

The aerosol-forming material and tobacco can be positioned within a cartridge within the outer housing, the cartridge having an opening facing the second electrical resistance heating element such that aerosol generated within the cartridge initially flows in the direction of the second electrical resistance heating element. The cartridge containing the tobacco material and the aerosol-forming material can be positioned between the second resistance heating element and the mouth-end of the outer housing, and the aerosol generated in the cartridge would initially flow in the direction of the second electrical resistance heating element and then flow towards the mouth-end of the outer housing.

In one further embodiment, the tobacco material is in the form of a tobacco rod circumscribed by a wrapping material and positioned between the second resistance heating element and the mouth-end of the outer housing. A cartridge comprising an aerosol-generating material circumscribed by a wrapping material can be positioned between the tobacco rod and the second resistance heating element. Preferably, a filter element is attached to the end of the tobacco rod closest to the mouth-end of the outer housing.

The smoking article can further include, in certain embodiments, a third resistance heating element within the outer housing, powered by the electrical power source, and operatively positioned to heat the tobacco rod. The third heating element can be, for example, a tubular heating element circumscribing all or a portion of the tobacco rod. When a third heating element is present, current through this heating element can also be selectively controlled and regulated by the puff-actuated controller.

In yet another preferred embodiment, a tobacco-containing, electrically-powered smoking article is provided which comprises:

(a) an outer housing having a mouth-end and an end distal to the mouth-end, wherein the mouth-end comprises an opening adapted for egress of an aerosol generated within the smoking article and the distal end comprises an opening adapted for intake of air into the smoking article;

(b) an electrical power source within the outer housing and operatively positioned downstream of the opening in the distal end of the outer housing such that air entering the smoking article passes the electrical power source;

(c) a first electrical resistance heating element within the outer housing, powered by said electrical power source, and operatively positioned for heating air drawn through the opening in the distal end of the outer housing;

(d) a cigarette rod (which is preferably removable so that the rod can be replaced within the smoking article) within the outer housing and comprising a tobacco rod circumscribed by a wrapping paper and an adjacent filter element, the cigarette rod being positioned downstream of the second resistance heating element;

(e) an aerosol-forming material positioned within the outer housing in fluid communication with said cigarette rod such that air can be drawn through both the cigarette rod and the aerosol-forming material;

(f) a second electrical resistance heating element within the outer housing, powered by said electrical power source, and operatively positioned for heating the aerosol-forming material and the tobacco rod; and

(g) a puff-actuated controller adapted for regulating current flow through at least one of said first and second electrical

resistance heating elements during draw, the controller comprising a sensor adapted for sensing draw by the user on the smoking article.

The aerosol-generating material may be in intimate contact with the tobacco in the tobacco rod, or the smoking article may further include a cartridge comprising the aerosol-generating material circumscribed by a wrapping material, the cartridge positioned between the tobacco rod and the second resistance heating element. In this embodiment also, the device may further include a third resistance heating element within the outer housing, powered by said electrical power source, and operatively positioned to heat the tobacco rod.

In a still further embodiment, the invention provides a tobacco-containing, electrically-powered smoking article comprising:

(a) an outer housing having a mouth-end and an end distal to the mouth-end, wherein the mouth-end comprises an opening adapted for egress of an aerosol generated within the smoking article and the distal end comprises an opening adapted for intake of air into the smoking article;

(b) a mouthpiece through which air can be drawn from the mouth-end of the outer housing, the mouthpiece being removably attached to the outer housing;

(c) an electrical power source within the outer housing and operatively positioned downstream of the opening in the distal end of the outer housing such that air entering the smoking article passes the electrical power source;

(d) a first electrical resistance heating element within the outer housing, powered by said electrical power source, and operatively positioned for heating air drawn through the opening in the distal end of the outer housing;

(e) a removable carrier device within the outer housing comprising a tobacco material and an aerosol-forming material in fluid communication with the tobacco material such that air can be drawn through both the tobacco material and the aerosol-forming material;

(f) a second electrical resistance heating element within the outer housing, powered by said electrical power source, and operatively positioned for heating the aerosol-forming material and the tobacco material; and

(g) a puff-actuated controller adapted for regulating current flow through at least one of said first and second electrical resistance heating elements during draw, the controller comprising a sensor adapted for sensing draw by the user on the smoking article.

An exemplary removable carrier device is a cigarette rod as described above, the cigarette comprising a tobacco rod circumscribed by a wrapping paper and an adjacent filter element, the cigarette rod being positioned between the second resistance heating element and the removable mouthpiece. Another example of a removable carrier device is a removable cartridge enclosing the aerosol-forming material and tobacco material as described above, the cartridge having an opening facing the second electrical resistance heating element such that aerosol generated within the cartridge initially flows in the direction of the second electrical resistance heating element. The removable carrier device can be heated by a third resistance heating element within the outer housing, the third heating element being powered by the electrical power source.

In any of the above embodiments, at least a portion of the tobacco in the tobacco rod can be in the form of tobacco cut filler, and the cut filler can be in intimate contact with the aerosol-forming material. In certain embodiments, at least a portion of the tobacco in the tobacco rod is in the form of an extract. In any embodiment, at least a portion of the tobacco in the tobacco rod and the aerosol-forming material can be in the form of an intimate mixture, or the two components can be separately-located within the smoking article, such as in separate, adjacent regions in the cigarette rod or in a cartridge. Exemplary aerosol-forming materials include glycerin, propylene glycol, and mixtures thereof.

BRIEF DESCRIPTION OF THE DRAWINGS

In order to assist the understanding of embodiments of the invention, reference will now be made to the appended drawings, which are not necessarily drawn to scale. The drawings are exemplary only, and should not be construed as limiting the invention.

FIG. **1** through FIG. **3** depict longitudinal cross-sectional views of various embodiments of an electrically powered, tobacco-containing smoking article; and

FIG. **4** and FIG. **5** each are representative schematic diagrams of electronic circuits for smoking articles.

DETAILED DESCRIPTION OF THE PREFERRED EMBODIMENTS

The present inventions now will be described more fully hereinafter with reference to the accompanying drawings. The invention may be embodied in many different forms and should not be construed as limited to the embodiments set forth herein; rather, these embodiments are provided so that this disclosure will satisfy applicable legal requirements. Like numbers refer to like elements throughout. As used in this specification and the claims, the singular forms "a," "an," and "the" include plural referents unless the context clearly dictates otherwise.

A smoking article of the present invention incorporates tobacco. The type of tobacco can vary. One type of tobacco can be employed, or combinations or blends of various types of tobacco can be employed. Furthermore, different types of tobaccos, or different blends of tobaccos, can be employed at different locations within the smoking article.

The tobacco that is employed can include, or can be derived from, tobaccos such as flue-cured tobacco, burley tobacco, Oriental tobacco, Maryland tobacco, dark tobacco, dark-fired tobacco and *Rustica* tobacco, as well as other rare or specialty tobaccos, or blends thereof. See, also, for example, the types of tobaccos set forth in U.S. Pat. No. 6,730,832 to Dominguez et al.; and U.S. Pat. No. 7,025,066 to Lawson et al.; and U.S. Pat. Appl. Ser. No. 60/818,198, filed Jun. 30, 2006, to Stebbins et al.; each of which is incorporated herein by reference. Descriptions of various types of tobaccos, growing practices, harvesting practices and curing practices are set for in *Tobacco Production, Chemistry and Technology*, Davis et al. (Eds.) (1999). Most preferably, the tobacco that is employed has been appropriately cured and aged. Especially preferred techniques and conditions for curing flue-cured tobacco are set forth in Nestor et al., Beitrage Tabakforsch. Int., (2003) 467-475 and U.S. Pat. No. 6,895,974 to Peele, which are incorporated herein by reference. Representative techniques and conditions for air curing tobacco are set forth in Roton et al., Beitrage Tabakforsch. Int., 21 (2005) 305-320 and Staaf et al., Beitrage Tabakforsch. Int., 21 (2005) 321-330, which are incorporated herein by reference.

The tobacco that is incorporated within the smoking article can be employed in various forms; and combinations of various forms of tobacco can be employed, or different forms of tobacco can be employed at different locations within the smoking article. For example, the tobacco can be employed in the form of cut or shredded pieces of lamina or stem; in a processed form (e.g., reconstituted tobacco sheet, such as

pieces of reconstituted tobacco sheet shredded into a cut filer form; films incorporating tobacco components; extruded tobacco parts or pieces; expanded tobacco lamina, such as cut filler that has been volume expanded; pieces of processed tobacco stems comparable to cut filler in size and general appearance; granulated tobacco; foamed tobacco materials; compressed or pelletized tobacco; or the like); as pieces of finely divided tobacco (e.g., tobacco dust, tobacco powder, agglomerated tobacco powders, or the like); or in the form of a tobacco extract. See, for example, U.S. patent application Ser. No. 11/194,215 filed Aug. 1, 2005, to Cantrell et al. and Ser. No. 11/377,630 filed Mar. 16, 2006 to Crooks et al.; which are incorporated herein by reference.

The smoking article can employ tobacco in the form of lamina and/or stem. As such, the tobacco can be used in forms, and in manners, that are virtually identical in many regards to those traditionally used for the manufacture of tobacco products, such as cigarettes. Traditionally, cut or shredded pieces of tobacco lamina and stem have been employed as so-called "cut filler" for cigarette manufacture. Pieces of water extracted stems also can be employed. As such, the tobacco in such a form introduces mass and bulk within the smoking article. Manners and methods for curing, de-stemming, aging, moistening, cutting, reordering and handling tobacco that is employed as cut filler will be apparent to those skilled in the art of tobacco product manufacture.

Processed tobaccos that can be incorporated within the smoking article can vary. Exemplary manners and methods for providing reconstituted tobacco sheet, including casting and paper-making techniques, are set forth in U.S. Pat. No. 4,674,519 to Keritsis et al.; U.S. Pat. No. 4,941,484 to Clapp et al.; U.S. Pat. No. 4,987,906 to Young et al.; U.S. Pat. No. 4,972,854 to Kiernan et al.; U.S. Pat. No. 5,099,864 to Young et al.; U.S. Pat. No. 5,143,097 to Sohn et al.; U.S. Pat. No. 5,159,942 to Brinkley et al.; U.S. Pat. No. 5,322,076 to Brinkley et al.; U.S. Pat. No. 5,339,838 to Young et al.; U.S. Pat. No. 5,377,698 to Litzinger et al.; U.S. Pat. No. 5,501,237 to Young; and U.S. Pat. No. 6,216,707 to Kumar; each of which is incorporated herein by reference. Exemplary manners and methods for providing extruded forms of processed tobaccos are set forth in U.S. Pat. No. 4,821,749 to Toft et al.; U.S. Pat. No. 4,880,018 to Graves, Jr. et al.; U.S. Pat. No. 5,072,744 to Luke et al.; U.S. Pat. No. 4,874,000 to Tamol et al.; U.S. Pat. No. 5,551,450 to Hemsley; U.S. Pat. No. 5,649,552 to Cho et al.; U.S. Pat. No. 5,829,453 to White; U.S. Pat. No. 6,125,855 to Nevett et al.; and U.S. Pat. No. 6,182,670 to White; each of which is incorporated herein by reference. Extruded tobacco materials can have the forms of cylinders, strands, discs, or the like. Exemplary expanded tobaccos (e.g., puffed tobaccos) can be provided using the types of techniques set forth in US Pat. Nos. Re 32,013 to de la Burde et al.; U.S. Pat. No. 3,771,533 to Armstrong et al.; U.S. Pat. No. 4,577,646 to Ziehn; U.S. Pat. No. 4,962,773 to White; U.S. Pat. No. 5,095,922 to Johnson et al.; U.S. Pat. No. 5,143,096 to Steinberg; U.S. Pat. No. 5,172,707 to Zambelli; U.S. Pat. No. 5,249,588 to Brown et al.; U.S. Pat. No. 5,687,748 to Conrad; and U.S. Pat. No. 5,908,032 to Poindexter; and US Pat. Pub. 2004/0182404 to Poindexter et al.; each of which is incorporated herein by reference. One particularly preferred type of expanded tobacco is dry ice expanded tobacco (DIET). Exemplary forms of processed tobacco stems include cut-rolled stems, cut-rolled-expanded stems, cut-puffed stems and shredded-steam expanded stems. Exemplary manners and methods for providing processed tobacco stems are set forth in U.S. Pat. No. 4,195,646 to Kite; U.S. Pat. No. 5,873,372 to Honeycutt et al.; each of which is incorporated herein by reference. Manners and methods for employing tobacco dust are set forth in U.S. Pat. No. 4,341,228 to Keritsis et al.; U.S. Pat. No. 4,611,608 to Vos et al.; U.S. Pat. No. 4,706,692 to Gellatly; and U.S. Pat. No. 5,724,998 to Gellatly et al.; each of which is incorporated herein by reference. Yet other types of processed tobaccos are of the type set forth in US Pat. Pub. No. 2006/0162733 to McGrath et al.

The tobacco can be used in a blended form. Typically, the blends of various types and forms of tobaccos are provided in a blended cut filler form. For example, certain popular tobacco blends for cigarette manufacture, commonly referred to as "American blends," comprise mixtures of cut or shredded pieces of flue-cured tobacco, burley tobacco and Oriental tobacco; and such blends, in many cases, also contain pieces of processed tobaccos, such as processed tobacco stems, volume expanded tobaccos and/or reconstituted tobaccos. The precise amount of each type or form of tobacco within a tobacco blend used for the manufacture of a particular smoking article can vary, and is a manner of design choice, depending upon factors such as the sensory characteristics (e.g., flavor and aroma) that are desired. See, for example, the types of tobacco blends described in *Tobacco Encyclopedia*, Voges (Ed.) p. 44-45 (1984), Browne, *The Design of Cigarettes,* 3rd Ed., p. 43 (1990) and *Tobacco Production, Chemistry and Technology*, Davis et al. (Eds.) p. 346 (1999). See, also, the representative types of tobacco blends set forth in U.S. Pat. No. 4,836,224 to Lawson et al.; U.S. Pat. No. 4,924,888 to Perfetti et al.; U.S. Pat. No. 5,056,537 to Brown et al.; and U.S. Pat. No. 5,220,930 to Gentry; U.S. Patent Appl. Pub. Nos. 2004/0255965 to Perfetti et al.; and 2005/0066986 to Nestor et al.; PCT Appl. Pub. No. WO 02/37990 to Bereman; and Bombick et al., *Fund. Appl. Toxicol.,* 39, p. 11-17 (1997); each of which is incorporated herein by reference.

Certain processed tobaccos can incorporate ingredients other than tobacco. However, it is preferred that processed tobaccos be composed predominantly of tobacco of some form, based on the dry weights of those processed tobaccos. That is, the majority of the dry weight of those processed tobaccos, and the majority of the weight of a mixture incorporating those processed tobaccos (including a blend of materials, or materials having additives applied thereto or otherwise incorporated therein), are provided by tobacco of some form. For example, those materials can be processed tobaccos that incorporate minor amounts of non-tobacco filler materials (e.g., calcium carbonate particles, spongy or absorbent materials, carbonaceous materials including carbon particles and graphite fibers, grains or wood pulp) and/or binding agents (e.g., guar gum, sodium alginate or ammonium alginate); and/or a blend of those materials can incorporate tobacco substitutes or extenders. Exemplary types of tobacco substitutes or extenders are set forth in U.S. patent application Ser. No. 11/489,334, filed Jul. 19, 2006, to Fagg et al., which is incorporated herein by reference. The foregoing materials, and blends incorporating those materials, frequently include greater than about 70 percent tobacco, often are greater than about 80 percent tobacco, and generally are greater than about 90 percent tobacco, on a dry weight basis, based on the combined weights of the tobacco, non-tobacco filler material, and non-tobacco substitute or extender. However, those processed tobaccos also can be made of virtually all tobacco, and not incorporate any non-tobacco fillers, substitutes or extenders.

The tobacco can be treated with tobacco additives of the type that are traditionally used for the manufacture of tobacco products. Those additives can include the types of materials used to enhance the flavor and aroma of tobaccos used for the production of cigars, cigarettes, pipes, and the like. For example, those additives can include various cigarette casing

and/or top dressing components. See, for example, U.S. Pat. No. 3,419,015 to Wochnowski; U.S. Pat. No. 4,054,145 to Berndt et al.; U.S. Pat. No. 4,887,619 to Burcham, Jr. et al.; U.S. Pat. No. 5,022,416 to Watson; U.S. Pat. No. 5,103,842 to Strang et al.; and U.S. Pat. No. 5,711,320 to Martin. Preferred casing materials include water, sugars and syrups (e.g., sucrose, glucose and high fructose corn syrup), humectants (e.g. glycerin or propylene glycol), and flavoring agents (e.g., cocoa and licorice). Those added components also include top dressing materials (e.g., flavoring materials, such as menthol). See, for example, U.S. Pat. No. 4,449,541 to Mays et al. Additives also can be added to the tobacco using the types of equipment described in U.S. Pat. No. 4,995,405 to Lettau, or that are available as Menthol Application System MAS from Kohl Maschinenbau GmbH. The selection of particular casing and top dressing components is dependent upon factors such as the sensory characteristics that are desired, and the selection and use of those components will be readily apparent to those skilled in the art of cigarette design and manufacture. See, Gutcho, *Tobacco Flavoring Substances and Methods*, Noyes Data Corp. (1972) and Leffingwell et al., *Tobacco Flavoring for Smoking Products (*1972). The tobacco also may be treated, for example, with ammonia or ammonium hydroxide or otherwise treated to incorporate ammonia (e.g., by addition of ammonia salts such as, for example, diammonium phosphate). Preferably, the amount of ammonia optionally incorporated into the smokable tobacco is less than about 5 percent, and generally about 1 to about 3 percent, based on the dry weight of the tobacco.

Tobacco can be incorporated with the smoking article in a form other than cut filler form. For example, tobacco leaf and/or reconstituted tobacco sheet can be used as a wrapper for a tobacco-containing component having the form of a cigar or an inner wrapper of a double wrapped cigarette rod. Alternatively, processed tobaccos, such as certain types of reconstituted tobaccos, can be employed as longitudinally extending strands. See, for example, the type of configuration set forth in U.S. Pat. No. 5,025,814 to Raker, which is incorporated herein by reference. In addition, certain types of reconstituted tobacco sheets can be formed, rolled or gathered into a desired configuration. In addition, molded, compressed or extruded segments or pieces of tobacco-containing materials that are formed into desired shapes (e.g., strands, tubes, cylinders, pellets, or the like) can be incorporated within the aerosol delivery article. See, for example, U.S. Pat. No. 4,836,225 to Sudoh; U.S. Pat. No. 4,893,639 to White; U.S. Pat. No. 4,972,855 to Kuriyama et al.; and U.S. Pat. No. 5,293,883 to Edwards; each of which is incorporated herein by reference. If desired, finely milled tobacco or tobacco dust can be incorporated within other types of processed tobaccos, such as extrudate formulations, reconstituted tobacco sheets, or the like. Furthermore, finely milled tobacco or tobacco dust can be contained on substrates, such as membranes or screens. If desired, at least a portion of the tobacco can be heat treated prior to use within the smoking article (e.g., have the form of high temperature dried, toasted, pre-pyrolyzed, condensed volatiles collected after tobacco is heated, condensed tobacco smoke components, or the like).

At least a portion of the tobacco incorporated with the smoking article can be provided in the form of a tobacco extract. As used herein, the term "tobacco extract" means components separated from, removed from, or derived from, tobacco using tobacco extraction processing conditions and techniques. Typically, tobacco extracts are obtained using solvents, such as solvents having an aqueous nature (e.g., water) or organic solvents (e.g., alcohols, such as ethanol or alkanes, such as hexane). As such, extracted tobacco components are removed from tobacco and separated from the unextracted tobacco components; and for extracted tobacco components that are present within a solvent, (i) the solvent can be removed from the extracted tobacco components, or (ii) the mixture of extracted tobacco components and solvent can be used as such. For example, tobacco can be subjected to extraction conditions using water as a solvent; the resulting aqueous extract of tobacco then is separated from the water insoluble pulp; and then (i) the mixture of aqueous extract of tobacco within water can be used as such, or (ii) substantial amounts of the water can be removed from extracted tobacco components (e.g., using spray drying or freeze drying techniques) in order to provide a tobacco extract in powder form. Preferred tobacco extracts incorporate numerous components that are separated from, removed from, or derived from, tobacco; and are not obtained using tobacco extraction processes conditions that are highly selective to a single component (e.g., preferred extracts are not high nicotine content extracts, or extracts that can be characterized as relatively pure nicotine compositions). As such, exemplary preferred tobacco extracts possess less than 45 percent nicotine, often less than 35 percent nicotine, and frequently less than 25 percent nicotine, on the basis of the total extract weight with solvent removed (e.g., on a dry weight basis when the solvent is water). In addition, highly preferred tobacco extracts are highly aromatic and flavorful, and hence introduce desirable sensory characteristics to the aerosol produced by the smoking articles incorporating those extracts. Exemplary types of tobacco extracts, tobacco essences, solvents, tobacco extraction processing conditions and techniques, and tobacco extract collection and isolation procedures, are set forth in Australia Pat. No. 276,250 to Schachner; U.S. Pat. No. 2,805,669 to Meriro; U.S. Pat. No. 3,316,919 to Green et al.; U.S. Pat. No. 3,398,754 to Tughan; U.S. Pat. No. 3,424,171 to Rooker; U.S. Pat. No. 3,476,118 to Luttich; U.S. Pat. No. 4,150,677 to Osborne; U.S. Pat. No. 4,131,117 to Kite; U.S. Pat. No. 4,506,682 to Muller; U.S. Pat. No. 4,986,286 to Roberts et al.; U.S. Pat. No. 5,005,593 to Fagg; U.S. Pat. No. 5,065,775 to Fagg; U.S. Pat. No. 5,060,669 to White et al.; U.S. Pat. No. 5,074,319 to White et al.; U.S. Pat. No. 5,099,862 to White et al.; U.S. Pat. No. 5,121,757 to White et al.; U.S. Pat. No. 5,131,415 to Munoz et al.; U.S. Pat. No. 5,230,354 to Smith et al.; U.S. Pat. No. 5,235,992 to Sensabaugh; U.S. Pat. No. 5,243,999 to Smith; U.S. Pat. No. 5,301,694 to Raymond; U.S. Pat. No. 5,318,050 to Gonzalez-Parra et al.; U.S. Pat. No. 5,435,325 to Clapp et al.; and U.S. Pat. No. 5,445,169 to Brinkley et al.; each of which is incorporated herein by reference.

Tobacco extracts typically are carried by a substrate, or are otherwise contained within a carrier or material. The substrate for the tobacco extract can be provided by generally solid substances, such as alumina beads, pieces of carbonaceous materials, paper or paper-type materials (e.g., shredded or gathered pieces of porous paper, papers incorporating tobacco materials such as tobacco stems or stalks, papers incorporating pieces of absorbent carbon particles, or the like), pieces of tobacco lamina and/or stem, pieces of processed tobacco, synthetic fibers, or the like. Alternatively, the tobacco extract can be mixed with generally liquid or fluid substances, such as solvents, aerosol-forming materials, flavor carrying agents, and the like. Mixtures of tobacco extracts and generally liquid or fluid substances, in turn, can be carried by generally solid substrate materials or can be contained within suitable containers, vials, cartridges, or the like.

Various manners and methods for incorporating tobacco into smoking articles, and particularly smoking articles that are designed so as to not purposefully burn virtually all of the

tobacco within those smoking articles, are set forth in U.S. Pat. No. 4,947,874 to Brooks et al.; U.S. Patent Application Pub. No. 2005/0016549 to Banerjee et al.; and U.S. patent application Ser. Nos. 11/194,215 filed Aug. 1, 2005, to Cantrell et al. and Ser. No. 11/377,630 filed Mar. 16, 2006 to Crooks et al.; which are incorporated herein by reference. In addition, tobacco has been incorporated with cigarettes that have been marketed commercially under the brand names "Premier" and "Eclipse" by R. J. Reynolds Tobacco Company. See, for example, those types of cigarettes described in *Chemical and Biological Studies on New Cigarette Prototypes that Heat Instead of Burn Tobacco*, R. J. Reynolds Tobacco Company Monograph (1988) and *Inhalation Toxicology,* 12:5, p. 1-58 (2000). Tobacco also has been incorporated within a smoking article that has been marketed commercially by Philip Morris Inc. under the brand name "Accord."

The smoking article of the present invention further includes an aerosol-generating material, which can be in intimate contact with the tobacco material (e.g., in the form of an intimate mixture), or can be carried by a non-tobacco substrate and segregated from the tobacco in the smoking article (e.g., positioned in an adjacent region of the device). The aerosol-generating material is positioned in fluid communication with the tobacco material such that air can be drawing through both the tobacco and the aerosol-generating material, thereby generating an aerosol that includes volatilized portions of the aerosol-generating material and volatilized components derived from the tobacco. The aerosol-forming material can vary, and mixtures of various aerosol-forming materials can be used. Representative types of aerosol-forming materials are set forth in U.S. Pat. No. 4,793,365 to Sensabaugh, Jr. et al.; and U.S. Pat. No. 5,101,839 to Jakob et al.; PCT Appl. Pub. No. WO 98/57556 to Biggs et al.; EPO 1,618,803 to Hon; and *Chemical and Biological Studies on New Cigarette Prototypes that Heat Instead of Burn Tobacco*, R. J. Reynolds Tobacco Company Monograph (1988); which are incorporated herein by reference.

A preferred aerosol-forming material produces a visible aerosol upon the application of sufficient heat thereto, or otherwise through the action of aerosol forming conditions using components of the smoking article. A highly preferred aerosol-forming material produces an aerosol that can be considered to be "smoke-like." A preferred aerosol-forming material is chemically simple, relative to the chemical nature of the smoke produced by burning tobacco. A preferred aerosol-forming material is a polyol; and exemplary preferred aerosol-forming materials include glycerin, propylene glycol, and mixtures thereof. If desired, aerosol-forming materials can be combined with other liquid materials, such as water. For example, aerosol-forming material formulations can incorporate mixtures of glycerin and water, or mixtures of propylene glycol and water. Exemplary aerosol-forming materials also include those types of materials incorporated within devices available through Atlanta Imports Inc., Acworth, Ga., USA., as an electronic cigar having the brand name E-CIG, which can be employed using associated Smoking Cartridges Type C1a, C2a, C3a, C4a, C1b, C2b, C3b and C4b; and as Ruyan Atomizing Electronic Pipe and Ruyan Atomizing Electronic Cigarette from Ruyan SBT Technology and Development Co., Ltd., Beijing, China.

The aerosol-forming material can be maintained within the smoking article in a variety of ways. For example, the aerosol-forming material can be contained within a container in liquid form, or soaked within absorbent fibrous materials or sponge-like materials. Exemplary absorbent materials can be composed of synthetic polymeric materials, such as fibers of polyethylene terephthalate. Alternatively, the aerosol-forming material can be incorporated within, or carried by, a material that acts as a substrate. For example, the substrate can be, at least in part, a material that incorporates tobacco. Exemplary substrate materials, and exemplary formulations incorporating aerosol-forming materials, are set forth in U.S. Pat. No. 4,793,365 to Sensabaugh et al.; U.S. Pat. No. 4,893,639 to White; U.S. Pat. No. 5,099,861 to Clearman et al.; U.S. Pat. No. 5,101,839 to Jakob et al.; U.S. Pat. No. 5,105,836 to Gentry et al.; U.S. Pat. No. 5,159,942 to Brinkley et al.; U.S. Pat. No. 5,203,355 to Clearman et al.; U.S. Pat. No. 5,271,419 to Arzonico et al.; U.S. Pat. No. 5,327,917 to Lekwauwa et al.; U.S. Pat. No. 5,396,911 to Casey, III et al.; U.S. Pat. No. 5,533,530 to Young et al.; U.S. Pat. No. 5,588,446 to Clearman; U.S. Pat. No. 5,598,868 to Jakob et al.; and U.S. Pat. No. 5,715,844 to Young et al.; and U.S. Patent Application Pub. No. 2005/0066986 to Nestor et al.; which are incorporated herein by reference. See, also, *Chemical and Biological Studies on New Cigarette Prototypes that Heat Instead of Burn Tobacco*, R. J. Reynolds Tobacco Company Monograph (1988). Exemplary substrate materials have been incorporated within the types of cigarettes commercially marketed under the trade names "Premier" and "Eclipse" by R. J. Reynolds Tobacco Company.

The substrate material can incorporate tobacco of some form, normally is composed predominantly of tobacco, and can be provided by virtually all tobacco material. The form of the substrate material can vary; but most preferably that material is employed in an essentially traditional cigarette, cigar or pipe filler form (e.g., as cut filler). The substrate material can be otherwise formed into desired configurations. The substrate material can be used in the form of a gathered web or sheet, using the types of techniques generally set forth in U.S. Pat. No. 4,807,809 to Pryor et al. The substrate material can be used into the form of a web or sheet that is shredded into a plurality of longitudinally extending strands, using the types of techniques generally set forth in U.S. Pat. No. 5,025,814 to Raker. The substrate material can have the form of a loosely rolled sheet, such that a spiral type of air passageway extends longitudinally through the aerosol-generation segment. Representative types of tobacco containing substrate materials can be manufactured from mixtures of tobacco types; or from one predominant type of tobacco (e.g., a cast sheet-type or paper-type reconstituted tobacco composed primarily of burley tobacco, or a cast sheet-type or paper-type reconstituted tobacco composed primarily of Oriental tobacco).

The substrate material also can be treated with tobacco additives of the type that are traditionally used for the manufacture of cigarettes, such as casing and/or top dressing components. The substrate material optionally can be ammoniated (e.g., by treatment with anhydrous ammonia, aqueous ammonium hydroxide, or ammonium salts such as diammonium phosphate). Alternatively those materials can be absent, or virtually absent, of any type of added ammonia (e.g., whether by treatment with anhydrous ammonia, aqueous ammonium hydroxide, or ammonium salts such as diammonium phosphate). Those materials also can be treated with other additives, such as potassium carbonate or sodium bicarbonate. Other materials, such as catalytic agents, nanoparticle compositions, and the like, also can be incorporated within any of the smokable materials of the smokable rod. See, for example, the types of components set forth in US Pat. Publication 2004/0173229 to Crooks et al. Preferably, the material is not treated with more that about 10 percent of any of those types of additive agents other than aerosol-forming materials, based on the dry weight of tobacco material within that substrate material.

The manner by which the aerosol-forming material is contacted with the substrate material (e.g., the tobacco) can vary. The aerosol-forming material can be applied to a formed tobacco material, or can be incorporated into processed tobaccos during manufacture of those tobaccos. The aerosol-forming material can be dissolved or dispersed in an aqueous liquid, or other suitable solvent or liquid carrier, and sprayed onto that substrate material. See, for example, U.S. Patent Appl. Pub. No. 2005/0066986 to Nestor et al. The amount of aerosol-forming material employed relative to the dry weight of substrate material can vary. Materials including exceedingly high levels of aerosol-forming material can be difficult to process into cigarette rods using conventional types of automated cigarette manufacturing equipment.

Cast sheet types of processed tobaccos preferably can incorporate relatively high levels aerosol-forming material. Reconstituted tobaccos manufactured using paper-making types of processes preferably can incorporate moderate levels of aerosol-forming material. Tobacco lamina strip and tobacco cut fuller can incorporate lower amounts of aerosol-forming material. For processed materials, such as cast sheet materials and paper-type reconstituted tobaccos, tobacco pulp materials that are extracted with aqueous liquids can be used as components thereof. The removal of some fraction or essentially all of the water soluble components of tobacco can assist in providing a processed material that is capable of acting as an effective substrate for higher levels of aerosol-forming material. In addition, dusting processed tobaccos with dry tobacco powders can assist in providing processed materials having relatively high levels of glycerin while not demonstrating overly tacky or sticky characteristics. Alternatively, relatively high levels of aerosol-forming materials can be applied to, or incorporated within, tobacco substrate materials; and those resulting materials can be considered to be somewhat moist, wet, tacky, sticky or gooey in nature.

Cast sheet processes tobaccos, and particularly cast sheet tobaccos incorporating certain amounts of tobacco pulp that have been extracted with water, often can comprise up to about 65 percent, often up to about 60 percent, and frequently up to about 55 percent, aerosol-forming material, based on the dry weight of the tobacco and aerosol-forming material in the processed material so produced. Paper-type reconstituted tobaccos, and particularly those forms of tobacco incorporating certain amounts of tobacco pulp materials that have been extracted with water, and not reapplying some or all of the water soluble extract components back to that pulp, often can comprise up to about 55 percent, often up to about 50 percent, and frequently up to about 45 percent, aerosol-forming material, based on the dry weight of the tobacco and aerosol-forming material in the material so produced. A tobacco material produced by spraying tobacco strip or cut filler with aerosol-forming material often does not comprise more than about 20 percent, and frequently does not comprise more than about 15 percent, aerosol-forming material, based on the dry weight of the tobacco and aerosol-forming material of the material so produced. Materials having relatively high loading levels of aerosol-forming material can be dried (e.g., by being subjected to a flow of hot air) to a moisture content of about 4 percent to about 5 percent, by weight; the dried material then can be processed to form the components of the designed configuration; and then those components can be re-equilibrated to a moisture content of about 12 to about 13 weight percent. Alternatively, those materials can be used in a somewhat moist or wet form.

Other types of materials incorporating relatively high levels of aerosol-forming material can be incorporated in the smoking article. Formed, encapsulated or microencapsulated materials can be employed. Such types of materials preferably include primarily of aerosol-forming material, and those materials most preferably incorporate some amount and form of tobacco. An example of such a type of material is a film produced by casting and drying an aqueous solution of about 65 to about 70 weight parts glycerin, and about 25 to about 30 weight parts binder (e.g., citrus pectin, ammonium alginate, sodium alginate or guar gum), and about 5 weight parts flavoring agent (e.g., vanillin, coffee, tea, cocoa and/or fruit flavor concentrates); and then surface-coating that film with about 2 to about 10 weight parts of a finely divided powder that is provided by milling tobacco lamina.

The amount of aerosol-forming material that is used within the smoking article is such that the cigarette exhibits acceptable sensory and organoleptic properties, and desirable performance characteristics. For example, it is highly preferred that sufficient aerosol-forming material, such as glycerin and/or propylene glycol, be employed in order to provide for the generation of a visible mainstream aerosol that in many regards resembles the appearance of tobacco smoke. Typically, the amount of aerosol-generating material incorporated into the smoking article is in the range of less than about 1.5 g, often less than about 1 g, and sometimes less than about 0.5 g. The amount of aerosol-forming material is dependent upon factors such as the number of puffs desired per tobacco-containing cartridge or cigarette incorporated within the smoking article. The amount of aerosol-forming material also can be dependent upon factors such as the position or location of that material relative to the heat-producing components of the smoking article, the ability of that material to wick or transfer to heating regions within the smoking article, the desired concentration of that material in the aerosol generated by the smoking article, and the like.

It is desirable for the aerosol-generating composition not to introduce significant degrees of unacceptable off-taste, filmy mouth-feel, or an overall sensory experience that is significantly different from that of a traditional type of cigarette that generates mainstream smoke by burning tobacco cut filler. The selection of the particular aerosol-generating material and substrate material, the amounts of those components used, and the types of tobacco material used, can be altered in order to control the overall chemical composition of the mainstream aerosol produced by the cigarette.

Other types of flavoring agents, or materials that alter the sensory or organoleptic character or nature of the mainstream aerosol of the smoking article, can be employed. Such flavoring agents can be provided from sources other than tobacco, can be natural or artificial in nature, and can be employed as concentrates or flavor packages. Of particular interest are flavoring agents that are applied to, or incorporated within, those regions of the smoking article where aerosol is generated. Exemplary flavoring agents include vanillin, ethyl vanillin, cream, tea, coffee, fruit (e.g., apple, cherry, strawberry, peach and citrus flavors, including lime and lemon), maple, menthol, mint, peppermint, spearmint, wintergreen, nutmeg, clove, lavender, cardamom, ginger, honey, anise, sage, cinnamon, sandalwood, jasmine, cascarilla, cocoa, licorice; and flavorings and flavor packages of the type and character traditionally used for the flavoring of cigarette, cigar and pipe tobaccos. Syrups, such as high fructose corn syrup, also can be employed. Flavoring agents also can include acidic or basic characteristics (e.g., organic acids, such as levulinic acid). Preferably, such flavoring agents constitute less than about 10 percent, and often less than about 5 percent of the total weight of tobacco, on a dry weight basis. The flavoring agents can be added to the tobacco material or to the aerosol-generating material or both.

The amount of tobacco incorporated within each smoking article can vary. For certain embodiments, the amount of tobacco cut filler incorporated within each smoking article is at least about 20 mg, generally at least about 50 mg, often at least about 75 mg, and frequently at least 100 mg, on a dry weight basis. For certain embodiments, the amount of tobacco cut filler incorporated within each smoking article does not exceed about 400 mg, generally does not exceed about 350 mg, often does not exceed about 300 mg, and frequently does not exceed about 250 mg, on a dry weight basis. For segments or sections incorporating tobacco cut filler or processed tobacco in cut filler form, the packing density of the material within those segments or sections typically is less than about 400 mg/cm^3, and generally is less than about 350 mg/cm^3; while the packing density of the material within those segments or sections can exceed about 100 mg/cm^3, and often can exceed about 150 mg/cm^3. Preferably, each such segment or section is composed entirely of tobacco and/or processed tobacco. Alternatively, each such segment or section can be composed of tobacco and/or processed tobacco mixed or blended with a non-tobacco substrate material. In either case, the tobacco material, and optional non-tobacco substrate material, can act as a substrate for aerosol-forming materials, flavoring agents, and the like.

The moisture content of the tobacco that is used within the smoking article can vary. Typically, the moisture content of the tobacco exceeds about 12 weight percent, and often can exceed about 15 weight percent. In certain circumstances, moist tobacco can be employed; and that tobacco can have a moisture content in excess of about 20 weight percent, often in excess of about 30 weight percent, and even in excess of about 40 weight percent.

Certain embodiments of the smoking article of the invention incorporate a cigarette rod as a necessary component. That is, the smoking article of the invention can incorporate a tobacco rod wrapped in paper or other wrapping material. The wrapping material used as a wrapper for containing the tobacco, and hence used for cigarette manufacture, can vary. Exemplary types of wrapping materials are set forth in U.S. Pat. No. 4,938,238 to Barnes et al. and U.S. Pat. No. 5,105,837 to Barnes et al. Wrapping materials, such as those set forth in U.S. Patent Appl. Pub. No. 2005/0005947 to Hampl, Jr. et al. and PCT Appl. Pub. No. WO 2005/039326 to Rasouli et al., can be employed as inner wrapping materials of a so-called "double wrap" configuration. An exemplary type of heat conductive wrapping material is set forth in U.S. Pat. No. 5,551,451 to Riggs et al.; and other suitable wrapping materials are set forth in U.S. Pat. No. 5,065,776 to Lawson et al. and U.S. Pat. No. 6,367,481 to Nichols et al.; each of which is incorporated herein by reference. Exemplary wrapping materials, such as laminates of paper and metal foil, and papers used as the outer circumscribing wrapper of the heat generation segment, have been incorporated within the types of cigarettes commercially marketed under the trade names "Premier" and "Eclipse" by R. J. Reynolds Tobacco Company. Other representative wrapping materials, and processed wrapping materials, suitable for use for cigarette manufacture are set forth in U.S. Pat. No. 5,220,930 to Gentry; U.S. Pat. No. 6,976,493 to Chapman et al.; and U.S. Pat. No. 7,047,982 to Seymour et al.; and U.S. patent application Ser. No. 11/377,630 filed Mar. 16, 2006 to Crooks et al.; each of which is incorporated herein by reference. Paper materials can be composed of materials, or treated with films, in order to provide resilience, particularly when the paper material is used to contain tobacco materials that are substrates for relatively high amounts of liquid materials (e.g., aerosol-forming materials). For example, such papers can be treated with coatings of nitrocellulose or ethylcellulose. Alternatively, paper materials can be highly absorbent in nature, and can act as substrates for liquid materials (e.g., aerosol-forming materials, liquid flavoring agents, or mixture of aerosol-forming materials and tobacco extracts).

The tobacco can be wrapped in at least one layer of tobacco lamina and/or reconstituted tobacco sheet. As such, the tobacco that is incorporated within the smoking article is configured in a type of form characteristic of a cigar. Outer wrappers for cigar type tobacco segments or sections can act as substrates for liquid materials (e.g., aerosol-forming materials, liquid flavoring agents, tobacco extracts, or mixtures thereof).

The tobacco can be wrapped in moisture permeable and air permeable pouches, sachets, packets, or the like. For example, finely divided tobacco pieces can be sealed in mesh-type pouches. Suitable pouches are of the type traditionally used for containment of certain types of smokeless tobacco products. See, for example, the types of pouches and types of contents of those pouches that are set forth in U.S. patent application Ser. No. 11/233,399, filed Sep. 22, 2005, to Holton et al.; Ser. No. 11/351,919, filed Feb. 10, 2006, to Holton et al.; and Ser. No. 11/461,633, filed Aug. 1, 2006, to Mua et al.; which are incorporated herein by reference. Such pouches and the contents thereof can act as substrates for significant amounts of aerosol-forming materials, flavoring agents and tobacco extracts. For example, relatively high levels of liquid materials can be applied to, or incorporated within, those substrates; and those resulting materials can be considered to be moist, wet, tacky, sticky or gooey in nature. If desired, those substrates can be soaked in liquid mixtures of aerosol-forming material and other components that provide tobacco flavor characteristics to the aerosol produced by the smoking article. The number of such types of pouches that are incorporated within a representative smoking article can vary, and typically can range, for example, from 1 to about 5.

The smoking article typically possesses a mouth-end piece. Representative types of filter elements, such as those employed for cigarettes, including segmented cigarette filter elements, are set forth in U.S. patent application Ser. No. 11/461,941, filed Aug. 2, 2006, to Nelson et al., which is incorporated herein by reference. Mouth-end pieces also can be fashioned into desired shapes using plastic materials such as nylon, polypropylene, polystyrene, poly(butadiene/styrene/acrylonitrile), or the like.

Representative smoking articles can possesses certain components comparable to, and operate in a manner generally comparable to, that type of device set forth in EPO 1,618,803 to Hon. Representative smoking articles, and exemplary components thereof, also can be provided using components of those nicotine aerosol delivery systems available through Atlanta Imports Inc., Acworth, Ga., USA., as an electronic cigar having the brand name E-CIG, which can be employed using associated Smoking Cartridges Type C1a, C2a, C3a, C4a, C1b, C2b, C3b and C4b. Exemplary components for representative smoking articles also have been available components of those devices available as Ruyan Atomizing Electronic Pipe and Ruyan Atomizing Electronic Cigarette from Ruyan SBT Technology and Development Co., Ltd., Beijing, China.

Aspects and embodiments of the present invention relating to various smoking articles now are described with reference to the illustrations contained in FIGS. **1**-**3**. Referring to FIG. **1**, an embodiment of a representative smoking article **10** is shown. The smoking article **10** has an overall shape that is generally rod-like or tubular in nature, generally akin to a

cigarette-type or cigar-type smoking article. The smoking article **10** includes a distal end **13** and a mouth-end **15**.

The smoking article **10** possesses an outer container or housing **20**. Although the dimensions and shape of the outer container **20** can vary, a representative outer housing is generally tubular in shape (e.g., having an overall length of about 11 cm and an outer diameter of about 1.5 cm). The outer housing **20** can be provided using a variety of materials. For example, the outer housing **20** can be provided from metal (e.g., aluminum or stainless steel), heat-resistant plastic (e.g., polycarbonate), treated paperboard material, or the like. If desired, the outer housing can possess an aesthetically pleasing cover (not shown). A representative outer housing can be of the type possessed by the Ruyan Atomizing Electronic Cigarette available from Ruyan SBT Technology and Development Co., Ltd. As shown, the outer housing **20** includes a mouth-end **15** and an end **13** distal to the mouth-end, wherein the mouth-end comprises an opening adapted for egress of an aerosol generated within the smoking article and the distal end comprises an opening adapted for intake of air into the smoking article **10**.

The distal end **13** of the outer container **20** of the smoking article **10** can possess an end cover or cap **35**. The end cover or cap **35** can be maintained in place by friction fit, a threaded screw mechanism that cooperates with a complementing threaded mechanism **28** that is secured to the distal region of the outer container, or the like. The end cover **35** can act to assist in maintaining various components of the smoking article contained within the outer container. The end cover preferably possesses at least one air passageway **32** to allow drawn air to enter the inner region of the outer container **20**. A representative end cover or cap **35** can be of the type possessed by the Ruyan Atomizing Electronic Cigarette available from Ruyan SBT Technology and Development Co., Ltd.

Within the outer container **20** is located an electric power source **36**, such as at least one battery. The battery typically is maintained in place by a generally tubular battery holder **40** that is positioned and secured in place within the outer container **20**. Typically, at least one longitudinally extending air passageway **45** allows for drawn air to pass by the battery towards the mouth-end **15** of the smoking article **10**. As shown, the passageway **45** can be created by incorporation of one or more grooves in the battery holder **40** or, alternatively, by incorporating ribs (not shown) extending into the interior of the battery holder in order to prevent the power source **36** from entering the passageway. The battery holder **40** also can act as a container for relevant electrical wiring (not shown) that passes from the battery to downstream regions of the smoking article **10**. Representative types of power sources, and representative arrangements thereof within the outer container, are of the type incorporated within a device available as Ruyan Atomizing Electronic Cigarette from Ruyan SBT Technology and Development Co., Ltd. If desired, higher power electrical power sources can be employed.

The smoking article **10** incorporates various electrically powered control components **50**. For a representative embodiment, the control components **50** are positioned within the tubular battery holder **40** in a region downstream from the battery **36**. Typically, the electrically-powered control components **50** include microchips that provide control of time of operation, control of current, control of electrical resistance heat generation, and the like. Exemplary circuits that can be included in the controller **50** are set forth in FIGS. **4-5**. The electrically-powered components **50** are powered by the battery **36**. Representative types of electronic control components are of the type can be of the type possessed by the Ruyan Atomizing Electronic Cigarette available from Ruyan SBT Technology and Development Co., Ltd. See, also, the types of electronic systems set forth in U.S. Pat. No. 4,947,874 to Brooks et al.

The representative smoking article **10** incorporates suitably adapted sensing mechanism **60** in order to provide for operation of the electrically powered components during desired periods of time. Representative types of sensing mechanism components are incorporated within a device available as Ruyan Atomizing Electronic Cigarette from Ruyan SBT Technology and Development Co., Ltd. See, also, those types of airflow sensing mechanisms proposed in EPO 1,618,803 to Hon; and U.S. Pat. No. 4,735,217 to Gerth et al.; U.S. Pat. No. 4,947,874 to Brooks et al.; and U.S. Pat. No. 5,388,574 to Ingebrethsen. The sensing mechanism **60** also can be powered by the battery **36**. Typically, the sensing mechanism components **60** are positioned within the outer container **20** in a location downstream from the electrically powered control components **50**. The sensor **60**, in concert with certain control circuitry within the controller **50**, is preferably part of a puff-actuated controller adapted for regulating current flow through one or more of the resistance heating elements discussed below. The sensor **60** is preferably adapted for sensing draw (i.e., intake of air from the smoking article) by the user of the smoking article. Representative types of draw sensors are set forth in U.S. Pat. No. 4,947,874 to Brooks et al., wherein pressure sensitive switches are discussed, such as pressure sensitive differential switches available from Micro Pneumatic Logic, Inc. of Ft. Lauderdale, Fla., pressure sensitive transducers, airflow-deflected vanes with motion sensors, and the like. See also, U.S. Pat. No. 7,117,867 to Cox et al. The sensor **60** is configured to allow airflow through or around the sensor. In the embodiment shown, the sensor **60** is configured in an annular shape with a passageway through the center thereof. Other configurations are also possible, such as configurations with multiple passageways through or around the sensor **60**.

The representative smoking article **10** also incorporates at least one electrical resistance heating element **70**, **72**. An optional first resistance heating element **70** can be located upstream from the sensing mechanism **60**, and as such, can act to heat drawn air passing through the smoking article from the distal end **13** of the outer housing **20**. A second resistance heating element **72** can be located downstream from the sensing mechanism **60**. The resistance heating elements **70**, **72** also can be powered by the battery **36**, and control of the operation of those heating elements can be controlled by the electrically powered control components **50**. The heating elements **70**, **72** are configured to allow airflow therethrough. The heating element **70** upstream of the sensor **60** is configured in the same manner as the sensor (i.e., in an annular shape); however, other configurations are possible as noted above.

Typically, the second resistance element **72** can be formed from relatively high surface area absorbent or wicking-type materials, such as graphite yarn, high surface area metallic cloth or screen, or the like. Resistance elements of such type are useful for supporting or holding sufficient aerosol-forming material for aerosol generation, as well as for wicking additional aerosol-forming material for aerosol generation during subsequent puffs. Alternatively, the second resistance element **72** can be employed in close proximity to an absorbent wicking material such that aerosol-forming material can be wicked or otherwise transferred so as to contact the second resistance element or contact an area in close proximity to the second resistance element (e.g., a region that is exposed to a the heat produced by the second resistance element). Representative types of resistance heating elements are incorpo-

rated within a device available as Ruyan Atomizing Electronic Cigarette from Ruyan SBT Technology and Development Co., Ltd. If desired, each of the heating elements **70**, **72** can be arranged to have current pass therethrough (and hence provide heat) in response to a signal provided by a puff-actuated controller that regulates current through one or more of the heating elements in response to signals from the sensor **60**. For example, each heating element **70**, **72** can be turned "on" and "off" in response to a signal provided in response to the sensing mechanism **60** and related control circuitry. Alternatively, current flow through the first heating element **70** can be controlled during periods of normal use of the smoking article **10**, and current flow through the second heating element **72** can be controlled only during periods of draw (i.e., the second heating element will be energized when the sensor **60** detects draw by the user).

The representative smoking article **10** of FIG. **1** incorporates a cartridge **85**. The cartridge can be manufactured from a variety of materials, such as metal (e.g., aluminum or stainless steel), paper (e.g., paperboard or paper coated with a hydrophobic film or coating), plastic (e.g., polyester, polypropylene, nylon, polycarbonate, or the like). The cartridge **85** contains tobacco **89** in some form. The cartridge **85** also most preferably contains aerosol-forming material. The tobacco **89** and the aerosol-forming material can be in the form of an intimate mixture or provided in separate regions of the cartridge **85**. Representative types of cartridges are of the type incorporated within a device available as Ruyan Atomizing Electronic Cigarette from Ruyan SBT Technology and Development Co., Ltd. can be modified by adding tobacco extract thereto, or by removing at least a portion of the substrate and nicotine-containing material incorporated therein and replacing that removed portion with a tobacco composition. For example, for the embodiment shown in FIG. **1**, the cartridge **85** can contain an upstream segment **95** composed of tobacco filler or processed tobacco filler material **89** incorporating aerosol-forming material, and a downstream segment **98** composed of a substrate **101**, such as fibers of polyethylene terephthalate carrying flavors and/or aerosol-forming material. The representative smoking article **10** is assembled such that a certain amount of aerosol-forming material and tobacco components can be wicked or otherwise transferred to heating element **72** or the region in close proximity to the heating element. Optionally, as shown, the extreme mouth end region of the cartridge **85** is sealed, and as such, tobacco components and aerosol-forming material have a tendency to travel upstream towards the resistance heater **72**. Typically, at least one air passageway **115** extends longitudinally between the inner surface of the outer container **20** and the outer surface of the cartridge **85**. This air passageway **115** can be created using the same techniques noted above in connection with the passageway **45** in the batter holder **40**.

A representative cartridge **85** is provided by modifying the components of a cartridge employed in a device available as Ruyan Atomizing Electronic Cigarette from Ruyan SBT Technology and Development Co., Ltd. For example, the section or segment of the fibrous substrate and aerosol-forming material is removed from that cartridge and discarded, and that portion is replaced by a section or segment composed of tobacco cut filler saturated with a mixture of glycerin and spray dried tobacco extract. As another example, a web of reconstituted tobacco sheet that is gathered so as to possess a plurality of longitudinally extending passageways can be treated with a mixture of propylene glycol, flavoring agent and tobacco extract. As still another example, the whole section or segment of the fibrous substrate and aerosol-forming material is removed from that cartridge and discarded, and all of that material is replaced by a section or segment composed of aqueous extracted tobacco cut filler pulp saturated or nearly saturated with a mixture of glycerin, flavoring agent and spray dried tobacco extract. As a further example, the fibrous substrate and aerosol-forming material can be positioned in the upstream end of the cartridge, and the downstream end of the cartridge can be provided by a plurality of formed tobacco pieces or pellets that act as a substrate for aerosol-forming material and flavoring agent.

The amount of aerosol-forming material, tobacco extract, flavoring agent, and the like that is carried by the substrate can vary; and the weight of those ingredients typically can be as much as at least equal to, often can be at least about twice that, and frequently can be at least about three times that, of the dry weight of the substrate. As such, the cartridge can be adapted to provide components, of types and in amounts, sufficient to provide aerosols demonstrating acceptable visual characteristics, acceptable mouthfeel and other organoleptic effects, acceptable tobacco flavor, and the like.

In a further embodiment, tobacco can be incorporated within a cartridge **85** having the ability to act as a type of liquid storage container of the smoking article. For example, powdered spray dried tobacco extract can be incorporated within the liquid storage container **85**, or liquid tobacco extracts or essences can be combined within components contained within the liquid storage container (e.g., aerosol-forming materials) so as to be intimately combined with those components. In another embodiment, pieces of tobacco lamina, stems, or processed tobacco can be incorporated within the liquid storage container **85**. For example, pieces of tobacco lamina cut filler, tobacco dust, or pieces of reconstituted tobacco sheet, can be incorporated within the liquid storage container. As such, the tobacco can be mixed with, or be part of, the aerosol-forming mixture within the cartridge **85**. Most preferably, essentially pure nicotine, extracts composed predominantly of nicotine, or formulations composed predominantly of nicotine, are not incorporated within the liquid storage container **85** or elsewhere within the smoking article.

In another embodiment, the tobacco can be located within the smoking article **10** in a region that is physically separate from the cartridge **85**. For example, the tobacco can be positioned so as to abut the cartridge **85**, or positioned in a spaced apart relationship relative to the cartridge. As such, the tobacco is not mixed with the aerosol-forming mixture within the cartridge **85**. In one embodiment, a charge or roll of tobacco cut filler wrapped in paper (e.g., so as to provide a generally cylindrical charge of tobacco) can be positioned either upstream or downstream from the cartridge **85**. In another embodiment, tobacco-containing reconstituted tobacco sheet (e.g., a formed cast sheet or reconstituted tobacco paper) can be used as wrapping materials of various components (e.g., including the cartridge **85**) within the smoking article **10**. In another embodiment, tobacco cut filler can surround the cartridge **85** or other components located within the smoking article **10**. In another embodiment, tobacco extract can be carried by a substrate or positioned within a cartridge that is located within the smoking article **10** physically separate from the aforementioned cartridge **85** that contains the aerosol-forming material.

The number of puffs during the use of a single cartridge **85** can vary, depending upon factors such as the amount of aerosol-forming material, tobacco, and other associated components that is employed, the form of those components, the positioning of those components within the smoking article **10** relative to the resistance heating elements, and the like. The amount of those components can be sufficient to provide,

for example, about 10 to about 15 puffs per cartridge, when that cartridge is employed within a smoking article and smoked under FTC smoking conditions. However, amount of those components can be sufficient to provide, for example, greater than about 200 puffs per cartridge, often greater than about 400 puffs per cartridge, and frequently greater than about 600 puffs per cartridge, when that cartridge is employed within a smoking article and smoked under FTC smoking conditions. For smoking articles employing cartridges containing sufficient components to provide a relatively large number of puffs, those smoking articles can be employed in conjunction with removable caps, or other suitable sealing means, in order that the smoking article can be sealed during periods of non-use. The smoking article **10** can be configured such that the cartridge **85** can be removed from the smoking article and replaced as needed.

The smoking article **10**, at its mouth-end **15**, possesses a mouth-end piece **120**. The mouth-end piece **120**, which is typically removable, can be maintained in place by friction fit, a threaded screw mechanism that cooperates with a complementing threaded mechanism that is secured to the outer container, or the like. A representative mouth-end piece can be of the type incorporated within a device available as Ruyan Atomizing Electronic Cigarette from Ruyan SBT Technology and Development Co., Ltd. Alternatively, the mouth-end piece **120** can have the form of other types of holders that have been proposed for use with smoking articles. See, also, for example, the types of mouth-end pieces and cigarette-type filter elements set forth in U.S. patent application Ser. No. 11/377,630 filed Mar. 16, 2006 to Crooks et al.

During use, the mouth-end **15** of the smoking article **10** is placed in the lips of the smoker. Air is drawn through the air passageways or openings **32** in the cap **35** located at the distal end **13** of the smoking article, and into the outer container **20**. Drawn air passes through air passageway **45** that extends along the length of the power source **36** and the electronic control components **50**, through an air passageway area within the first heating element **70**, through the air flow sensing region **60**, past or through the second heating element **72**, through air passageway **115** that extends along the length of the cartridge **85**, and into the mouth-end piece **120**. Typically, resistance heating elements provide surface region temperatures, and hence the ability to heat aerosol-forming materials and tobacco materials in surrounding regions in the vicinity of those heating elements. Typically, during relevant periods of use, those heating elements can provide surface region temperatures of at least about 200° C., and often at least about 300° C. Typically, those temperatures do not exceed about 600° C., often do not exceed about 500° C., and frequently do not exceed about 400° C. Aerosol that is formed by the action of drawn air passing heated tobacco components and aerosol-forming material in the region occupied by the second heating element **72** is drawn through the mouth-end piece **120**, and into the mouth of the smoker. That is, when used, the smoking article **10** yields visible mainstream aerosol that preferably resembles the mainstream tobacco smoke of traditional cigarettes that burn tobacco cut filler. The aerosol may also contain flavors and other components provided by, or derived from, tobacco.

Referring to FIG. **2**, another embodiment of a representative smoking article **10** is shown. The smoking article **10** has a rod-like shape, and includes a distal end **13** and a mouth-end **15**. The smoking article **10** possesses certain components comparable to, and in certain regards operates in a manner generally comparable to, that smoking article described previously with reference to FIG. **1**. However, the smoking article is adapted to incorporate a cigarette **150**.

An exemplary type of cigarette **150** possesses a charge or roll of tobacco **89** (e.g., tobacco cut filler or processed tobacco material) wrapped in wrapping material **160** (e.g., paper). The length of the resulting tobacco rod can vary; with a typical tobacco rod having a length of at least about 30 mm, often at least about 40 mm, while a typical tobacco rod has a length that does not exceed about 60 mm, and often does not exceed about 50 mm. The circumference of the tobacco rod can vary; with a typical tobacco rod having a circumference of about 20 mm to about 35 mm, and often about 25 mm to about 30 mm. Depending upon factors such as the ingredients incorporated within the cigarette **150**, the number of puffs of aerosol per cigarette than are expected, the configuration of the holder into which the cigarette is inserted, the amount of heat generated by the resistance heating element, and the like, the physical dimensions of the cigarette can be smaller than those of conventional, commercially available cigarettes that burn tobacco.

Typically, the wrapping material **160** is wrapped around the tobacco **89** so as to form a generally cylindrical rod-shaped cigarette rod or tobacco rod. That is, the wrapping material **160** is formed into a generally tubular shape, and the tobacco is positioned within the hollow region within that tube. Preferably, the wrapping material **160** is formed such that each end of the tobacco rod is open to expose the tobacco contained therein, and to allow the passage of drawn air therethrough.

The wrapping material **160** can vary. The wrapping material **160** can be a paper wrapping material of the type traditionally used for cigarette manufacture. The wrapping material **160** also can be composed of a laminate of metallic foil and paper, and as such, heat generated by the second heating element can heat the metallic foil of the laminate and hence heat the tobacco contained within that laminate. See, for example, the types of wrapping materials, wrapping material laminates and wrapping material configurations set forth U.S. patent application Ser. No. 11/377,630 filed Mar. 16, 2006 to Crooks et al.

For the embodiment shown, the cigarette **150** possesses a type of cartridge **85** at its distal end within the wrapping material **160** and in fluid communication with the tobacco rod. That optional cartridge **85** contains an aerosol-generating material composition **101** therein. The components of the composition **101** can include a substrate material (e.g., polyethylene terephthalate fibers) that can be mixed or blended with tobacco filler. Typically, the substrate materials act as carriers for tobacco components and other aerosol-forming materials that can be delivered to the mouth of the smoker. The cartridge **85** can have a generally tubular shape with open ends such that air may flow therethrough. Cartridges can be manufactured from a variety of materials, such as paper or plastic, or heat conductive materials (e.g., metal foil, metal mesh or screen, ceramic non-woven web, or the like). Typically, when present, the length of the cartridge **85** does not exceed about 30 mm, and often does not exceed about 20 mm. Typically, when present, the cartridge **85** has a length of at least about 5 mm, and often at least about 10 mm. Optionally, an air passageway or gap (not shown) can exist downstream from the cartridge **85**, or the cartridge **85** can abut the tobacco rod as shown in FIG. **2** such that some migration of material between the tobacco rod and the cartridge is possible. Such an air passageway, when present, typically has a length of up to about 10 mm.

In one embodiment, the cartridge **85** and/or the wrapping material **160** of the tobacco rod can be manufactured from materials that, to some degree, conduct electricity. As such, depending upon the positioning of the cigarette **150** within

the smoking article **10**, the cartridge **85** and/or the wrapping material **160** can be in electrical contact with the electrical circuitry associated with the electrical resistance heating element **72**. As a result, it is possible that some degree of electrical resistance heating also can be provided by the cartridge **85** and/or the wrapping material **160**.

In one embodiment, the cartridge **85** can be virtually devoid or free of nicotine. For example, the cartridge **85** can contain aerosol-forming materials, non-tobacco flavoring agents, and optionally, tobacco (e.g., as pieces of tobacco or as an extract) that has been de-nicotinized (e.g., using de-nicotinization processes or by using tobaccos virtually devoid of nicotine). As such, visible aerosol or flavored visible aerosol that is produced solely using components incorporated within the container **85** possesses virtually no nicotine. Rather, nicotine provided to the smoker of the smoking article within the mainstream aerosol delivered by the smoking article is provided by action upon tobacco **89** located in another region of the smoking article **10** rather than from nicotine incorporation within the cartridge **85**.

In one embodiment, the cartridge **85** can contain a gathered web of paper that incorporates carbon particles (e.g., about 10 to about 60 weight parts carbon and about 40 to about 90 weight parts wood pulp or flax fiber). See, for example, the types of carbon-containing papers set forth in U.S. Pat. No. 5,360,023 to Blakley et al., which is incorporated herein by reference. For example, a gathered sheet of carbon paper weighing about 40 mg, and having a length of about 10 mm to about 20 mm, can be saturated with a liquid mixture of glycerin, tobacco extract, and flavoring agent (e.g., with about 40 mg to about 120 mg of liquid mixture).

In a further embodiment, the cartridge **85** can contain a gathered web of paper that incorporates calcium carbonate particles (e.g., about 10 to about 40 weight parts calcium carbonate and about 60 to about 90 weight parts wood pulp or flax fiber). For example, a gathered sheet of carbon paper weighing about 40 mg, and having a length of about 10 mm to about 20 mm, can be saturated with a liquid mixture of glycerin, tobacco extract, and flavoring agent (e.g., with about 40 mg to about 100 mg of liquid mixture).

In yet another embodiment, the cartridge **85** can contain a fibrous carbonaceous material (e.g., graphite fibers). For example, a segment formed from about 40 mg to about 100 mg of those fibers, and having a length of about 10 mm to about 20 mm, can be saturated with a liquid mixture of glycerin, tobacco extract, and flavoring agent (e.g., in an amount of about 3 times of the dry weight of those fibers).

In a still further embodiment, the cartridge **85** can contain a reconstituted tobacco material (e.g., a cast sheet type material, an extruded material, or a paper-type reconstituted tobacco material) that incorporates particles or pieces of highly heat conductive materials (e.g., a matrix of aluminum wires, aluminum foil, copper wire, copper tubing, metal beads, or the like). Representative pieces or beads can have lengths, thicknesses or diameters of about 0.01 micrometers to about 1 mm. That material can act as a substrate for aerosol-forming material, tobacco extract, flavoring agents, and the like, and also can act as a conductor of heat produced by electrical resistance heating to regions within the cigarette **150**.

If desired, the region of the cigarette **150** that is wrapped in the paper wrapper **160** can be composed entirely of tobacco material, processed tobacco material, or a blend of tobacco material and other substrate material, and those materials is treated in such a manner so as to act as substrates for aerosol-forming materials. For such an embodiment, the previously described cartridge **85** is not incorporated within the cigarette **150**, and the components contained within the wrapping material **160** are not necessarily positioned or arranged therein in a segmented fashion.

The cigarette **150** also can possess an optional filter element **200** located at the downstream end of the tobacco rod. The filter element can be composed of filter material **215** (e.g., cellulose acetate tow, gathered polypropylene web, plasticized cellulose acetate tube, or the like) wrapped in circumscribing plug wrap **218**. The filter element can be attached to the tobacco rod using a tipping material **222** that circumscribes the length of the filter element **200** and an adjacent region of the tobacco rod.

The mouth-end piece **120** of the smoking article **10** can be adapted to act as a support for the filter element **200** of the cigarette **150**, and can be removably attached to the outer housing **20** of the smoking article. That is, the mouth-end piece **120** can be removed from the outer housing **20** of the smoking article **10**, the filter element **200** of the cigarette **150** can be secured within the mouth-end piece (e.g., by friction fit), and the cigarette can be inserted into the downstream end of the outer housing. In such a circumstance, the mouth-end piece **120** can have a generally tubular shape. As such, the mouth-end piece can act as a type of support for the cigarette **120** while that cigarette is positioned within the outer housing **20** for use.

During use, the mouth-end **15** of the smoking article **10** is placed in the lips of the smoker. Air is drawn through the through the air passageways or openings **32** in the cap **35** located at the distal end **13** of the smoking article, and into the outer container **20**. Draw air passages through air passageway **45** that extends along the length of the power source **36** and the electronic control components **50**, through an air passageway area within the first optional heating element **70**, through the air flow sensing region **60**, past or through the second heating element **72**, through the cigarette **150** (including through cartridge **85**), and into the mouth-end piece **120**. Heat generated by the heating elements acting upon the tobacco and components thereof acts to volatilize components of the tobacco or otherwise cause components of tobacco to be entrained in drawn air. As such, the resulting aerosol incorporating tobacco components or tobacco-derived components is drawn into the mouth of the smoker. After use, the spent cigarette **150** is removed from the outer container **20** and disposed of, and when desired, a new cigarette is replaced within the outer container.

Referring to FIG. **3**, yet another embodiment of a representative smoking article **10** is shown. The smoking article possesses a distal end **13** and a mouth-end **15**. The smoking article **10** possesses certain components comparable to, and in certain regards operates in a manner generally comparable to, that smoking article described previously with reference to FIG. **1**. The smoking article **10** is adapted to incorporate a type of cigarette **150**. The tobacco segment **89**, circumscribed with a wrapping material **160**, can be provided so as to provide tobacco components or tobacco derived components by the action of heat. Components of the tobacco segment **89** can be treated (e.g., by contact with metal salts, moisture, or other suitable materials) in order that the tobacco (e.g., as cut filler, reconstituted tobacco sheet, or the like) that is subjected to heating by the action of the electrically generated heat exhibits desirable heat resistance, does not burn to an undesirable extent, experiences a controlled smolder, or the like. The tobacco segment **89** can also incorporate an aerosol-generating material. As shown, the cigarette **150** may include a filter element **200** as noted in connection with FIG. **2**.

The smoking article **10** possesses a third optional resistance heating element **300** that is powered by the power

source **36**. The third resistance heating element is operated in essentially the same manner as the first and second resistance heating elements **70**, **72** that have been described previously with reference to FIG. **1**. As such, the third resistance heating element **300** is powered by the power source **36** and controlled by the electrically powered control components **50**, through suitable electrical connections, such as conductive wires, or the like (not shown). The third resistance heating element **300** can be provided by a suitable conductive material that can be suitably used as a resistance heating element, such as non-woven graphite yarn or web, ceramic material, metallic cloth or screen, metal alloy sheet, or the like. The physical size and shape of the third resistance heating element is such that the heating element can provide heat to at least a portion of the tobacco **89** of the cigarette **150**. For example, the third resistance heating element **300** can have the general shape of a tube that is adapted to fit snuggly around a portion of a tobacco rod **89** inserted therein. Alternatively, the third resistance heating element **300** can have a form so that aerosol-forming material and extracted tobacco components can be wicked from a tobacco substrate or a substrate paper material that is wrapped around that tobacco **89**. If desired, at least one of the resistance heating elements (e.g., the first and/or third resistance elements) can be equipped with a separate on/off timing mechanisms and/or switching mechanisms in order that the cigarette **150** can be pre-heated or heating can be otherwise controlled during certain desired periods of use of the smoking article **10**. In other words, each heating element can be selectively and separately controlled in certain embodiments. If desired, each of the heating elements can be arranged to have current pass therethrough (and hence provide heat) in response to a signal provided by response to the sensing mechanism component **60**. For example, each heating element can be turned "on" and "off" in response to a signal provided by response to the sensing mechanism **60**. Alternatively, current flow through the first heating element **70** can be controlled during periods of normal use of the smoking article **10**, and current flow through the second heating element **72** can be controlled only during periods of draw. Thus, each resistance heating element can provide differing amounts of heat, and can be operated to provide heat during differing periods.

Optionally, the size and shape of the second resistance heating element **72** can be altered. For example, as shown in FIG. **3**, at least a portion of the second resistance heating element can be elongated, and at least a portion thereof can extend downstream within the outer container **20**. As such, at least a portion of the second resistance heating element can extend into the tobacco segment **89**, and hence be in close contact with a significant amount of substrate and aerosol-forming material within the tobacco.

Preferably, a thermally insulated region **400** circumscribes the resistance heating element **300** of the smoking article **10** as shown, although the insulation can extend further down the smoking article and circumscribe, for example, the first and second heating elements as well. Representative types and configurations of insulation are set forth in U.S. patent application Ser. No. 11/194,215 filed Aug. 1, 2005, to Cantrell et al. and Ser. No. 11/377,630 filed Mar. 16, 2006 to Crooks et al. As such, there is provided a way to prevent the outer regions of the outer container **20** from becoming unduly hot to the touch during use of the smoking article **10**. In addition, a series of substantially non-permeable walls or like structural regions **420** can assist in ensuring that drawn air has a tendency to pass through the tobacco **89** during use of the smoking article **10**. The insulating material **400** also can be positioned elsewhere within the smoking article **10**. For example, insulating material **400** can be used as a substrate material for tobacco extract, tobacco dust, aerosol-forming material, flavoring agent, and the like. In addition, insulating material **400** can be positioned at the locations or regions near the distal end **13** of the smoking article **10**, around the power source **36**, around the electronic and/or puff control components of the smoking article **10**, or elsewhere.

During use, the mouth-end **15** of the smoking article **10** is placed in the lips of the smoker. Air is drawn through the air passageways or openings **32** in the cap **35** located at the distal end **13** of the smoking article, and into the outer container **20**. Draw air passages through air passageway **45** that extends along the length of the power source **36** and the electronic control components **50**, through an air passageway area within the first heating element **70**, through the air flow sensing region **60**, past or through the second heating element **72**, through the cigarette **150**, and into the mouth-end piece **120**. Heat generated by the three heating elements **70**, **72**, **300** acting upon the tobacco and components thereof act to volatilize components of the tobacco or otherwise cause components of tobacco to be entrained in drawn air. Typically, resistance heating elements provide surface region temperatures, and hence the ability to heat aerosol-forming materials and tobacco materials in surrounding regions in the vicinity of those heating elements. Typically, during relevant periods of use, those heating elements can provide surface region temperatures of at least about 200° C., and often at least about 300° C. Those temperatures typically do not exceed about 600° C., often do not exceed about 500° C., and frequently do not exceed about 400° C. As such, the resulting aerosol incorporating tobacco components or tobacco derived components is drawn into the mouth of the smoker. After use, the spent cigarette **150** is removed from the outer container **20** and disposed of, and when desired, a new cigarette is replaced within the outer container. Removal of the cigarette **150** can be accomplished by removing the mouthpiece **120**, which is typically removably attached to the outer housing **20**.

For all the embodiments described above, the selection of battery and resistance heating elements can vary, and can be a matter of design choice. For example, the battery voltage, amount of electrical current and resistance provided by the various resistance heating elements can be selected to provide sufficient power for initial heating (e.g., sufficient to provide virtually immediate aerosol formation and delivery of tobacco derived components upon draw), adequate heating of relevant components within the smoking article (i.e., sufficient heat to generate aerosol formation), adequate power source lifetime, and the like. Typically, the various components of the various control circuitry acts to ensure that current is controlled in order that resistance heating heats relevant components to a desired temperature or within a desired temperature range (i.e., a preferred smoking article does not overheat). Selection of the power source and resistance heating elements can be a matter of design choice, and will be readily apparent to one skilled in the art of design and manufacture of electrical resistance heating systems.

If desired, the smoking articles **10** of the present invention optionally can be air diluted. For smoking articles **10** that optionally are air diluted or ventilated, the amount or degree of air dilution or ventilation can vary. Frequently, the amount of air dilution for an air diluted cigarette is greater than about 10 percent, generally is greater than about 20 percent, often is greater than about 30 percent, and sometimes is greater than about 40 percent. Preferably, the upper level for air dilution for an air diluted cigarette is less than about 80 percent, and often is less than about 70 percent. As used herein, the term "air dilution" is the ratio (expressed as a percentage) of the

volume of air drawn through the air dilution means to the total volume and air and aerosol drawn through the cigarette and exiting the mouth end portion of the cigarette. Higher air dilution levels can act to reduce the transfer efficiency of aerosol-forming material into mainstream aerosol.

Preferred smoking articles **10** of the present invention exhibit desirable resistance to draw. For example, an exemplary smoking article exhibits a pressure drop of between about 50 and about 200 mm water pressure drop at 17.5 cc/sec. air flow. Preferred smoking articles exhibit pressure drop values of between about 60 mm and about 180, more preferably between about 70 mm to about 150 mm, water pressure drop at 17.5 cc/sec. air flow. Preferably, pressure drop values of smoking articles are measured using a Filtrona Cigarette Test Station (CTS Series) available form Filtrona Instruments and Automation Ltd.

Aerosols that are produced by smoking articles of the present invention are those that comprise air-containing components such as vapors, gases, suspended particulates, and the like. Aerosol components can be generated by the action of heat upon tobacco of some form; and in certain circumstances, by thermally decomposing tobacco caused by heating tobacco, smoldering tobacco, and charring tobacco; and by vaporizing aerosol-forming agent. As such, the aerosol can contain volatilized components, combustion products (e.g., carbon dioxide and water), incomplete combustion products, and products of pyrolysis. Aerosol components may also be generated by the action of heat from burning tobacco of some form (and optionally other components that are burned to generate heat), upon substances that are located in a heat exchange relationship with tobacco material that is burned and other components that are burned. Aerosol components may also be generated by the aerosol generation system as a result of the action of heat of the heat generation system. Most preferably, components resulting from the aerosol generation system have an overall composition, and are positioned within the smoking article, such that those components have a tendency not to undergo a significant degree of thermal decomposition (e.g., as a result of combustion, smoldering or pyrolysis) during conditions of normal use.

Referring to FIG. **4**, there is shown a diagram of an embodiment of an electronic circuit **500** that can be incorporated within a smoking article of the present invention. The control circuitry for the smoking articles of the invention can be assembled as discrete electronic components or functionally as an integrated microprocessor device. The representative circuit includes a power source **36**, an actuation mechanism **510** (e.g., an actuation switch), and at least one resistance heating element; and for the embodiment shown, a first resistance heating element **70**, a second resistance heating element **72**, and a third resistance heating element **300**. Such a circuit that incorporates three resistance heating elements can be incorporated within the type of smoking article described previously with reference to FIG. **3**. It is noted that the circuit **500** of FIG. **4** can be readily adapted for use in a smoking article comprising two heating elements by simply removing the circuit pathways involving heating element **300**, and thus would be suitable for use in the embodiments of FIGS. **1** and **2**.

The actuation mechanism **510** typically is a switching mechanism that can be engaged by activity of the smoker. That is, such a switch can be activated by pressing or other type of movement by the smoker using his/her finger, by activation by contact with the lips of the smoker, or by at least one other type of sensing mechanism located at an appropriate location on the smoking article. A representative switch can be manually operated by the smoker.

The circuit preferably incorporates a timing mechanism **520**. Such a timing mechanism can be programmed to provide for a controlled period of operation. For example, after the circuit has been activated by activity resulting in the switching of the current actuation mechanism **510** to an "on" position, the timing mechanism operates for a selected period of time (e.g., 1 minute, 2 minutes, 4 minutes, or the like). In the event that the remaining portion of the circuit is reactivated within the selected period of time, the timing mechanism **520** is reset and begins operating again. In the event of the occurrence a certain period of inactivity or non-use, the timing mechanism then can act to turn the circuit "off," until reactivation of the cycle.

During operation of the circuit, current passes through the first resistance heating element **70** and the third resistance heating element **300**, and as such, those resistance heating elements produce heat. Control of the temperatures generated by each resistance heating element is provided by control mechanisms **530**, **540**, respectively.

A puff control mechanism **550**, such as a suitable air flow sensing switch, acts to complete the circuit that provides current to the second resistance heating element **72**. That is, during periods of draw, the circuit that provides current through the second resistance heating element is closed, and hence that heating element produces heat. A predetermined quantity of heat can be produced by current controlled by a timer (e.g., a fixed pulse set at about 0.5 second to about 2 seconds in duration). Alternatively, a series of "on/off" types of pulses can be provided during draw periods. When draw is complete, that circuit is broken. A control mechanism **560**, such as a timer, acts to provide for control of the current passing through the circuit, and hence the amount of heat generated by heating element. For example, for longer puff periods, current supplied to the heating element, and hence power for aerosol generation, can be provided by a controlled sequential "on" and "off" signal provided by the timer. Typically, the timed period for current flow ranges from about 0.1 second to about 1 second, and about 0.2 second to about 0.6 second generally can be employed; while the "off" period for between periods of periodic current flow often can range from about 0.1 second to about 0.6 second.

Referring to FIG. **5**, there is shown a diagram of another embodiment of an electronic circuit **500** that can be incorporated within a smoking article of the present invention. It is again noted that the control circuitry for the smoking articles of the invention can be assembled as discrete electronic components or as an integrated microprocessor device. The representative circuit includes a power source **36**, an actuation mechanism **510**, and at least one resistance heating element; and for the embodiment shown, a first resistance heating element **70**, a second resistance heating element **72**, and a third resistance heating element **300**. Such a circuit that incorporates three resistance heating elements can be incorporated within the type of smoking article described previously with reference to FIG. **3**. Again, simply removing the third heating element **300** could produce a circuit useful in other smoking article embodiments set forth herein.

The circuit preferably incorporates a timing mechanism **520**. Such a timing mechanism can be programmed to provide for a controlled period of operation. For example, after the circuit has been activated by activity resulting in the switching of the current actuation mechanism **510** to an "on" position, the timing mechanism operates for a selected period of time. In the event that the remaining portion of the circuit is activated, the timing mechanism is reset and begins operating

again. In the event of the occurrence a certain period of inactivity or non-use, the timing mechanism then can act to turn the circuit "off."

During operation, current passes through the first resistance heating element **70** and the third resistance heating element **300**, and as such, those resistance heating elements produce heat. Control of the temperatures generated by each resistance heating element is provided by control mechanisms **530**, **540**, respectively.

A puff control mechanism **590** acts to complete the circuit that provides current to the second resistance heating element **72**. That is, during periods of draw, the circuit that provides current through the second resistance heating element is closed, and hence that heating element produces heat. When draw is complete, that circuit is broken. In the embodiment shown, the puff control mechanism **590** is provided by a pressure sensor **570** and a threshold detector **580** (e.g., a Schmitt trigger), which can provide for control of the current passing through the second resistance heating element **72**, and hence for heat generation by heating element **72** that is proportional to the period and magnitude of the draw. For example, for longer puff periods, current supplied to the heating element **72**, and hence power for aerosol generation, can be provided for longer periods of time. As another example, for deeper or more rigorous puffs, a sensing of stronger draw can be used to provide for greater current flow to the appropriate resistance heating element, and hence provide for a correspondingly greater aerosol generation. Alternatively, a separate switch (not shown) can be selected by the smoker to provide control of current to at least one of the resistance heating elements; and as such, during periods of draw (e.g., whether or not the draw or puff is intense, long, short, deep, shallow, large in volume, small in volume, or the like) the conditions associated with heat generation for aerosol formation are controlled, and hence, consistent aerosol formation can be provided during each puff.

Many modifications and other embodiments of the invention will come to mind to one skilled in the art to which this invention pertains having the benefit of the teachings presented in the foregoing description; and it will be apparent to those skilled in the art that variations and modifications of the present invention can be made without departing from the scope or spirit of the invention. Therefore, it is to be understood that the invention is not to be limited to the specific embodiments disclosed and that modifications and other embodiments are intended to be included within the scope of the appended claims. Although specific terms are employed herein, they are used in a generic and descriptive sense only and not for purposes of limitation.

What is claimed is:

1. A tobacco-containing, electrically-powered smoking article comprising:

(a) an outer housing having a mouth-end and an end distal to the mouth-end, wherein the mouth-end comprises an opening adapted for egress of an aerosol generated within the smoking article and the distal end comprises an opening adapted for intake of air into the smoking article;

(b) an electrical power source within the outer housing and operatively positioned downstream of the opening in the distal end of the outer housing such that air entering the smoking article passes the electrical power source;

(c) a first electrical resistance heating element within the outer housing, powered by said electrical power source, and operatively positioned for heating air drawn through the opening in the distal end of the outer housing;

(d) a second electrical resistance heating element within the outer housing, powered by said electrical power source, and operatively positioned downstream from said first electrical resistance heating element;

(e) a puff-actuated controller adapted for regulating current flow through at least one of said first and second electrical resistance heating elements during draw, the controller comprising a sensor adapted for sensing draw by the user on the smoking article; and

(f) a cigarette rod within the outer housing, the cigarette rod having a first end and a second end and comprising a cartridge circumscribed by a wrapping material positioned at the first end of the cigarette rod, a tobacco rod circumscribed by the wrapping material adjacent to the cartridge, and a filter element adjacent to the tobacco rod and positioned at the second end of the cigarette rod, wherein the cartridge contains an aerosol-generating material, wherein the cigarette rod is operatively positioned adjacent to the second resistance heating element such that the second resistance heating element is adapted for heating the aerosol-forming material in the cartridge; and wherein the cartridge, the tobacco rod, and the filter element are in fluid communication such that air drawn into the outer housing passes through the cigarette rod.

2. The smoking article of claim **1**, wherein the aerosol-forming material comprises glycerin, propylene glycol, or a mixture thereof.

3. The smoking article of claim **1**, further comprising a third resistance heating element within the outer housing, powered by said electrical power source, and operatively positioned to heat the cigarette rod.

4. The smoking article of claim **1**, wherein at least a portion of the tobacco in the tobacco rod is in the form of tobacco cut filler.

5. The smoking article of claim **1**, wherein the cigarette rod is removable from the outer housing.

6. The smoking article of claim **1**, wherein the cartridge has a tubular shape with two open ends allowing air to flow therethrough.

7. The smoking article of claim **1**, wherein the wrapping material is a laminate of metallic foil and paper.

8. The smoking article of claim **1**, wherein aerosol-generating material within the cartridge is carried by a substrate material.

9. The smoking article of claim **8**, wherein the substrate material comprises polyethylene terephthalate fibers.

10. The smoking article of claim **8**, wherein the substrate material is blended with tobacco cut filler.

11. The smoking article of claim **1**, wherein the cartridge is constructed of a heat conductive material.

12. The smoking article of claim **1**, wherein the cartridge contains a paper material incorporating carbon particles therein.

13. The smoking article of claim **12**, wherein the paper material incorporating carbon particles is saturated with the aerosol-generating material.

14. The smoking article of claim **1**, wherein the cartridge contains a paper material incorporating carbon particles saturated with a mixture of the aerosol-generating material, a tobacco extract, and a flavoring agent.

15. The smoking article of claim **1**, wherein the cartridge contains a paper material incorporating calcium carbonate particles therein.

16. The smoking article of claim **15**, wherein the paper material incorporating calcium carbonate particles is saturated with the aerosol-generating material.

17. The smoking article of claim **1**, wherein the cartridge contains a paper material incorporating calcium carbonate particles saturated with a mixture of the aerosol-generating material, a tobacco extract, and a flavoring agent.

18. The smoking article of claim **1**, wherein the cartridge contains a fibrous carbonaceous material.

19. The smoking article of claim **18**, wherein the fibrous carbonaceous material is saturated with the aerosol-generating material.

20. The smoking article of claim **1**, wherein the cartridge contains a fibrous carbonaceous material saturated with a mixture of the aerosol-generating material, a tobacco extract, and a flavoring agent.

21. The smoking article of claim **1**, wherein the cartridge contains a reconstituted tobacco material incorporating particles of a heat conductive material.

22. The smoking article of claim **1**, further comprising a mouth-end piece removably attached to the outer housing at the mouth-end thereof.

23. The smoking article of claim **22**, wherein the mouth-end piece is tubular in shape and sized to allow insertion of the filter element of the cigarette rod therein.

24. A tobacco-containing, electrically-powered smoking article comprising:

(a) an outer housing having a mouth-end and an end distal to the mouth-end, wherein the mouth-end comprises an opening adapted for egress of an aerosol generated within the smoking article and the distal end comprises an opening adapted for intake of air into the smoking article;

(b) an electrical power source within the outer housing and operatively positioned downstream of the opening in the distal end of the outer housing such that air entering the smoking article passes the electrical power source;

(c) a first electrical resistance heating element within the outer housing, powered by said electrical power source, and operatively positioned for heating air drawn through the opening in the distal end of the outer housing;

(d) a second electrical resistance heating element within the outer housing, powered by said electrical power source, and operatively positioned downstream from said first electrical resistance heating element;

(e) a puff-actuated controller adapted for regulating current flow through at least one of said first and second electrical resistance heating elements during draw, the controller comprising a sensor adapted for sensing draw by the user on the smoking article; and

(f) a cigarette rod within the outer housing, the cigarette rod having a first end and a second end and comprising a cartridge circumscribed by a wrapping material positioned at the first end of the cigarette rod, a tobacco rod circumscribed by the wrapping material adjacent to the cartridge, and a filter element adjacent to the tobacco rod and positioned at the second end of the cigarette rod, wherein the cartridge has a tubular shape with two open ends allowing air to flow therethrough and contains an aerosol-generating material carried by a substrate material, wherein the cigarette rod is operatively positioned adjacent to the second resistance heating element such that the second resistance heating element is adapted for heating the aerosol-forming material in the cartridge; and wherein the cartridge, the tobacco rod, and the filter element are in fluid communication such that air drawn into the outer housing passes through the cigarette rod.

25. The smoking article of claim **24**, wherein the aerosol-forming material comprises glycerin, propylene glycol, or a mixture thereof.

26. The smoking article of claim **24**, further comprising a third resistance heating element within the outer housing, powered by said electrical power source, and operatively positioned to heat the cigarette rod.

27. The smoking article of claim **24**, wherein at least a portion of the tobacco in the tobacco rod is in the form of tobacco cut filler.

28. The smoking article of claim **24**, wherein the cigarette rod is removable from the outer housing.

29. The smoking article of claim **24**, wherein the wrapping material is a laminate of metallic foil and paper.

30. The smoking article of claim **24**, wherein the substrate material is selected from the group consisting of polyethylene terephthalate fibers, a paper material incorporating carbon particles therein, a paper material incorporating calcium carbonate particles therein, a fibrous carbonaceous material, and a reconstituted tobacco material incorporating particles of a heat conductive material.

31. The smoking article of claim **24**, wherein the substrate material is blended with tobacco cut filler.

32. The smoking article of claim **24**, wherein the cartridge is constructed of a heat conductive material.

33. The smoking article of claim **24**, further comprising a mouth-end piece removably attached to the outer housing at the mouth-end thereof.

34. The smoking article of claim **33**, wherein the mouth-end piece is tubular in shape and sized to allow insertion of the filter element of the cigarette rod therein.

35. The smoking article of claim **24**, wherein the first electrical resistance heating element has an annular shape.

36. The smoking article of claim **24**, wherein the second electrical resistance heating element comprises a wicking material.

* * * * *