US006678746B1

(12) **United States Patent**
Russell et al.

(10) **Patent No.: US 6,678,746 B1**
(45) **Date of Patent: Jan. 13, 2004**

(54) **PROCESSING NETWORK PACKETS**

(75) Inventors: **Lance W. Russell**, Hollister, CA (US); **Tung Nguyen**, Cupoertino, CA (US); **Mallikarjunan Mahalingam**, Santa Clara, CA (US)

(73) Assignee: **Hewlett-Packard Development Company, L.P.**, Houston, TX (US)

(*) Notice: Subject to any disclaimer, the term of this patent is extended or adjusted under 35 U.S.C. 154(b) by 539 days.

(21) Appl. No.: **09/630,033**

(22) Filed: **Aug. 1, 2000**

(51) **Int. Cl.**[7] **G06F 3/00**

(52) **U.S. Cl.** **710/1**; 709/223; 709/238; 711/100

(58) **Field of Search** 710/1, 5, 15, 20, 710/31, 62, 63, 64, 29, 33, 52; 709/200, 230, 223, 238, 232; 711/100

(56) **References Cited**

U.S. PATENT DOCUMENTS

5,228,083 A * 7/1993 Lozowick et al. 380/9
5,351,243 A * 9/1994 Kalkunte et al. 370/92
5,361,372 A * 11/1994 Rege et al. 395/800
5,752,078 A 5/1998 Delp et al.
5,805,808 A * 9/1998 Hasani et al. 709/200
5,828,835 A * 10/1998 Isfeld et al. 709/200
5,946,318 A * 8/1999 Post 370/412
5,948,079 A 9/1999 Tsai et al.
6,215,789 B1 * 4/2001 Keenan et al. 370/399
6,226,680 B1 * 5/2001 Boucher et al. 709/230
6,249,319 B1 * 6/2001 Post 348/515
6,463,486 B1 * 10/2002 Parry et al. 710/52

FOREIGN PATENT DOCUMENTS

WO WO 00/10302 2/2000

* cited by examiner

Primary Examiner—Jeffrey Gaffin
Assistant Examiner—Rijue Mai

(57) **ABSTRACT**

Systems and methods of processing network packets are described. These systems and methods provide improved packet processing results by logically and physically separating packet header processing functions from packet data processing functions. In this way, a network processing system may perform network handling operations and data processing operations substantially in parallel. One or more embodiments feature a network adapter for exchanging with a computer network information in the form of packets each including a packet header and packet data. The network adapter includes a packet parser configured to parse an information packet into a packet header and packet data and to direct the packet header to a first memory address for protocol processing and to direct packet data to a second memory address for data processing.

9 Claims, 4 Drawing Sheets

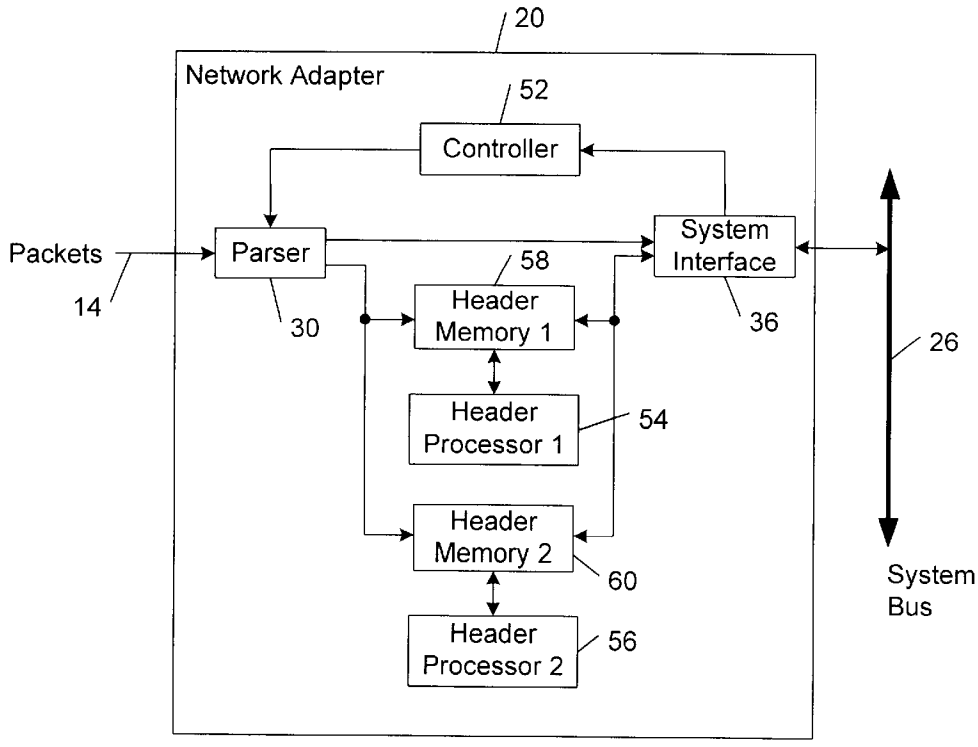

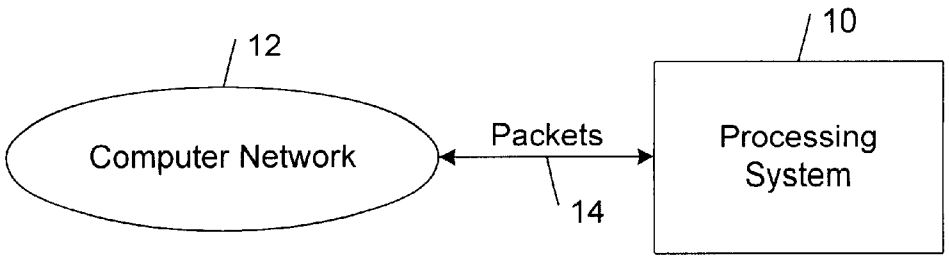

FIG. 1

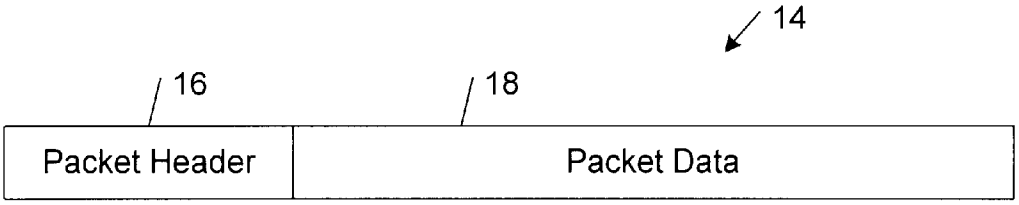

FIG. 2

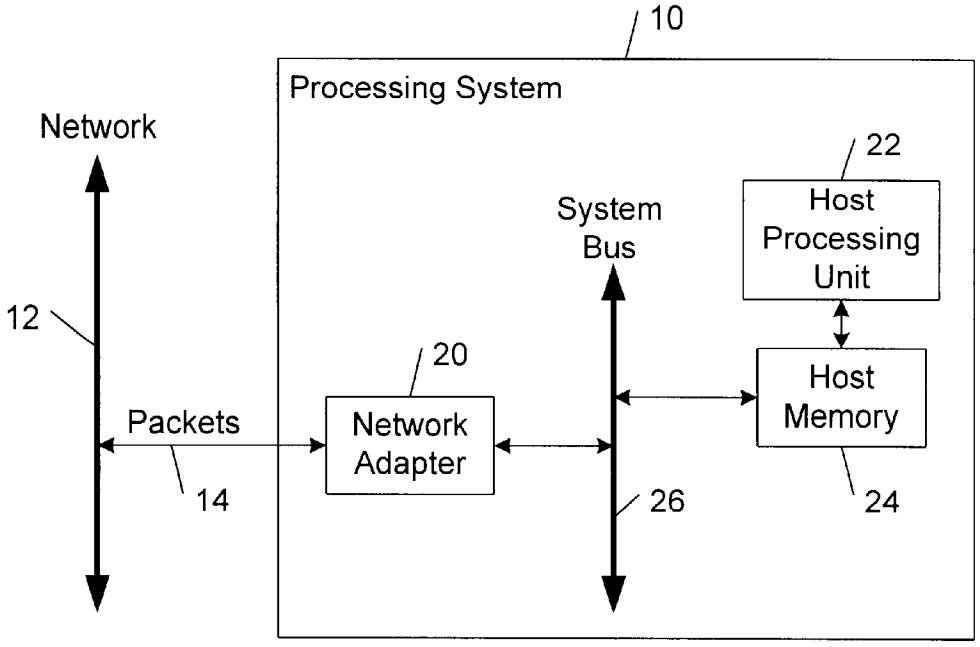

FIG. 3

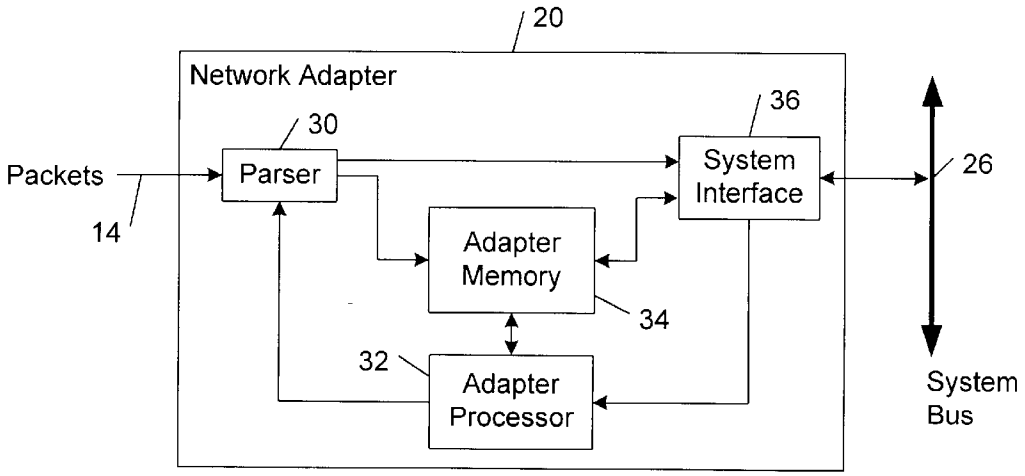
20
Network Adapter
30
36
Packets
Parser
System Interface
26
14
Adapter Memory
34
32
Adapter Processor
System Bus

FIG. 4A

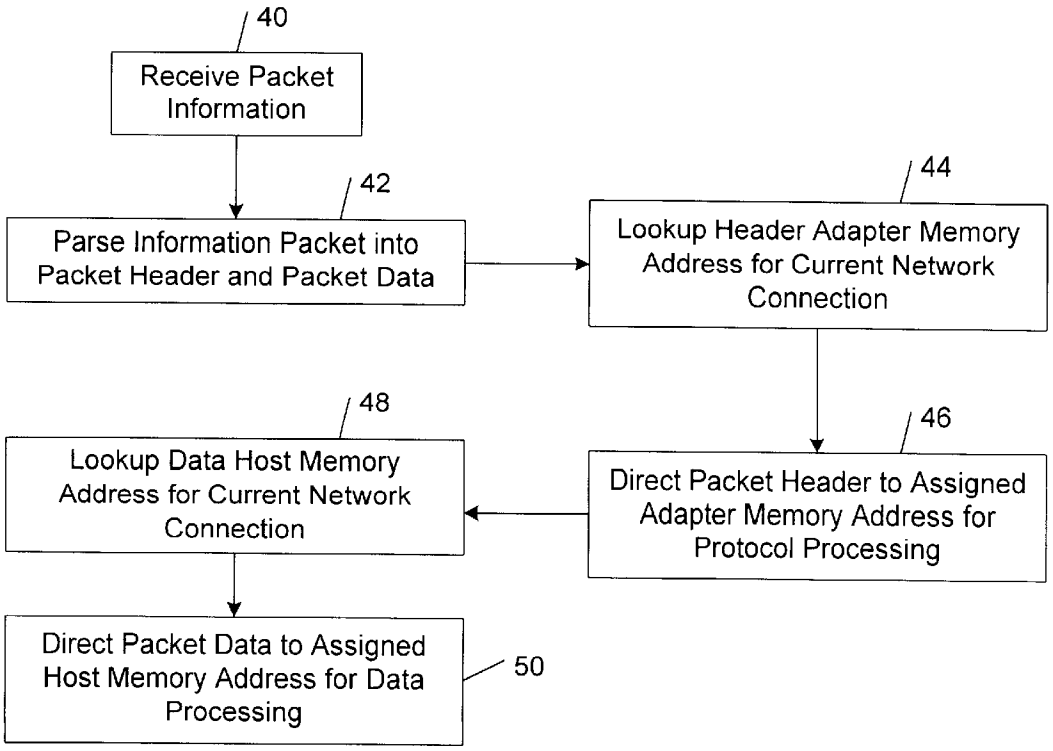
40
Receive Packet Information
42
Parse Information Packet into Packet Header and Packet Data
44
Lookup Header Adapter Memory Address for Current Network Connection
48
Lookup Data Host Memory Address for Current Network Connection
46
Direct Packet Header to Assigned Adapter Memory Address for Protocol Processing
Direct Packet Data to Assigned Host Memory Address for Data Processing
50

FIG. 4B

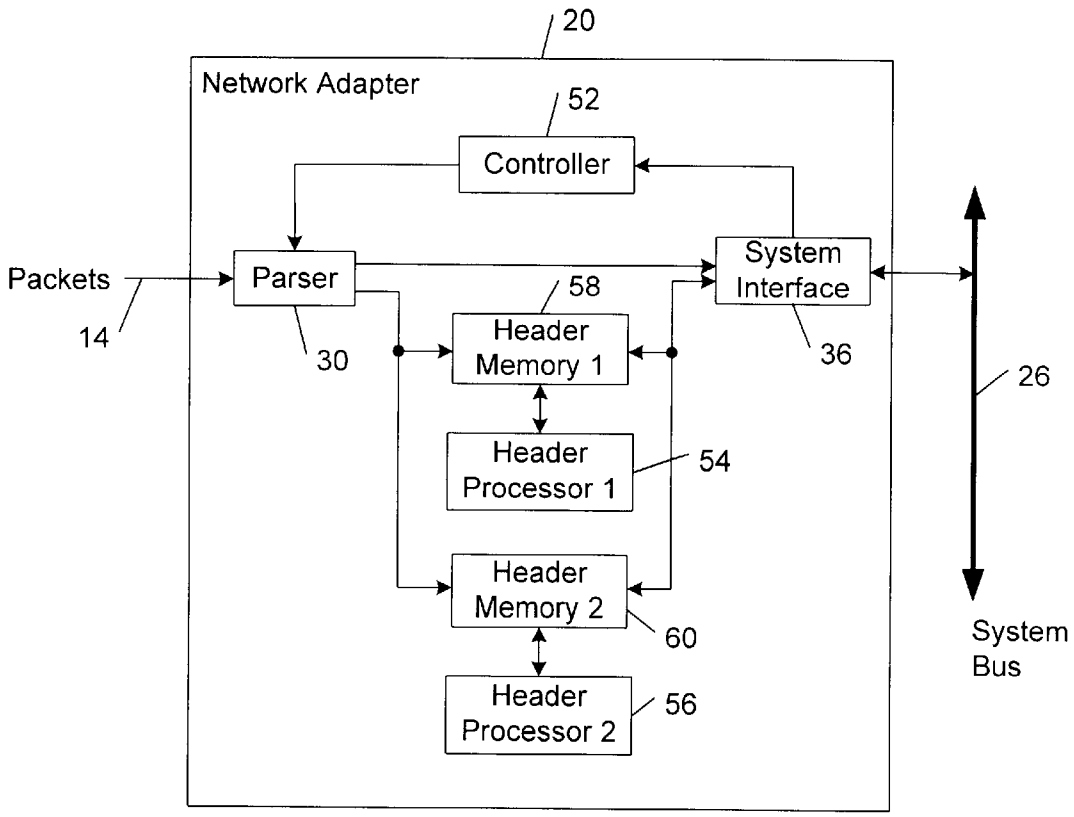
20
Network Adapter
52
Controller
Packets
14
Parser
30
System
Interface
36
58
Header
Memory 1
Header
Processor 1
54
Header
Memory 2
60
Header
Processor 2
56
26
System
Bus

FIG. 5

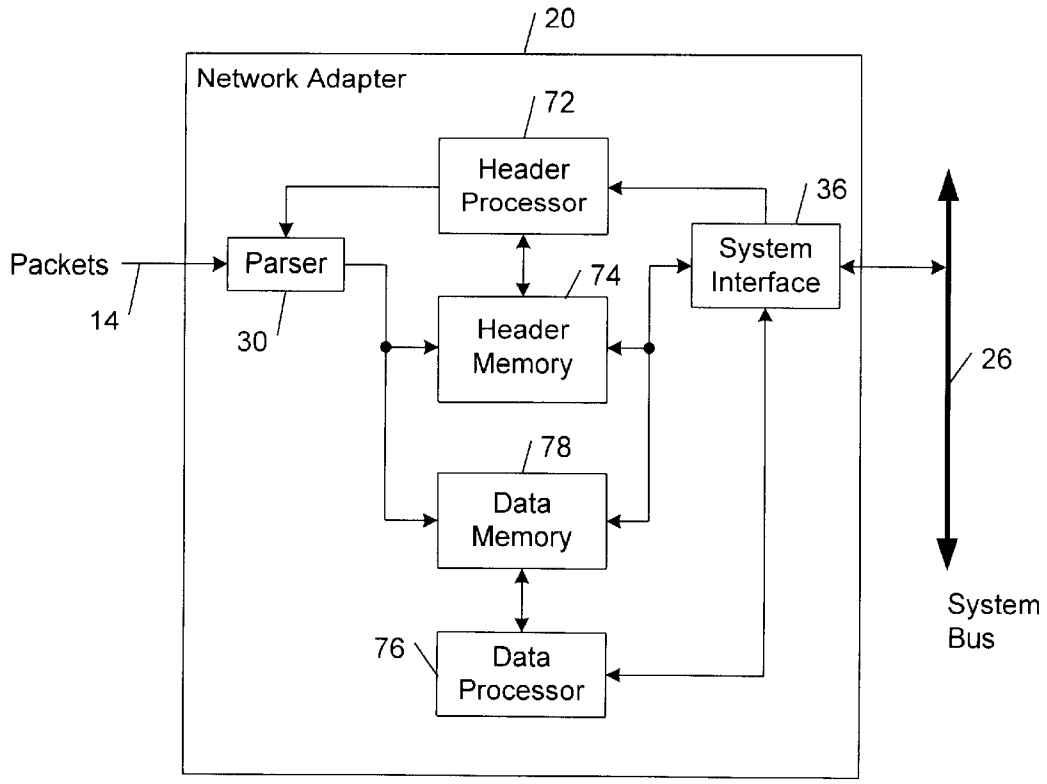
20
Network Adapter
72
Header Processor
36
System Interface
Packets
Parser
14
30
74
Header Memory
26
78
Data Memory
System Bus
76
Data Processor

FIG. 6A

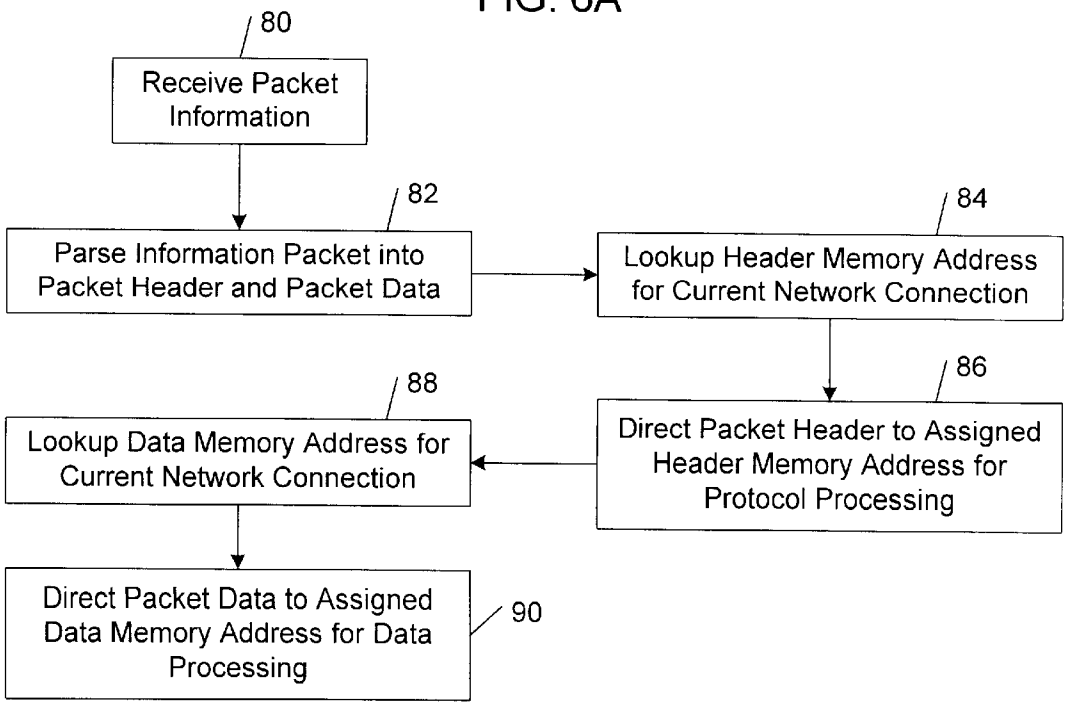
80
Receive Packet Information
82
Parse Information Packet into Packet Header and Packet Data
84
Lookup Header Memory Address for Current Network Connection
86
Direct Packet Header to Assigned Header Memory Address for Protocol Processing
88
Lookup Data Memory Address for Current Network Connection
Direct Packet Data to Assigned Data Memory Address for Data Processing
90

FIG. 6B

PROCESSING NETWORK PACKETS

TECHNICAL FIELD

This invention relates to systems and methods for processing network packets.

BACKGROUND

A computer network (e.g., a local area network (LAN) or a wide area network (WAN)) consists of a group of two or more computers that are linked together. The computers (or processing systems) of a computer network typically transmit information over the network in the form of packets. A number of different packet-based protocols have been defined to enable interconnected network computers to communicate with each other. Generally, a network protocol requires each processing system connected to the network to check, process and route control information contained in each information packet.

A network processing system typically includes a network adapter that supports data communication between the processing system and the computer network. The network adapter may have either a host-based architecture or a packet-based architecture. With a host-based architecture, a network adapter transfers information packets by direct memory access (DMA) to host memory within the processing system as the information packets are received. With a packet-based architecture, on the other hand, a network adapter typically receives an entire information packet into adapter memory before transferring the information packet to host memory.

A number of different schemes have been proposed to reduce latency between the time a packet is received and the time the packet is processed. For example, U.S. Pat. No. 5,752,078 describes a network adapter that prepares a DMA transfer of an information packet to host memory before the entire information packet has been received. The '078 purports that is packet processing approach reduces the user-perceived latency between the time an information packet is received by the network adapter and the time a user is notified that the information packet has been received. U.S. Pat. No. 5,948,079 describes a network peripheral device that transfers portions of a data packet to host memory in a non-sequential order to improve the efficiency with which the host system processes the data packet. International Patent Publication No. WO 00/10302 describes a programmable packet header processor that includes a plurality of parallel processing logic blocks for processing packet header information in accordance with one or more protocol handling operations. Still other packet processing schemes have been proposed.

SUMMARY

The invention provides improved packet processing results by logically and physically separating packet header processing functions from packet data processing functions. In this way, the invention enables a network processing system to perform network handling operations and data processing operations substantially in parallel.

In one aspect, the invention features a network adapter for exchanging with a computer network information in the form of packets each including a packet header and packet data. The network adapter comprises a packet parser configured to parse an information packet into a packet header and packet data and to direct the packet header to a first memory address for protocol processing and to direct packet data to a second memory address for data processing.

Embodiments of the invention may include one or more of the following features.

The network adapter preferably includes an adapter header memory, wherein the first memory address corresponds to a location in the adapter header memory. The network adapter also preferably includes an adapter processor that is operable to interrogate packet header information stored in the adapter header memory in accordance with one or more network protocol handling operations. The adapter processor may be operable to program the packet parser with the first and second memory addresses for each network connection.

In one embodiment, the packet parser is configured to parse the packet header into two or more header components and to direct each header component to a respective memory address. In this embodiment, the network adapter preferably includes two or more adapter processors each of which is operable to process a respective one or more stored header components substantially in parallel.

The network adapter may be incorporated into a data processing system having a host memory and a host processor. In one embodiment, the second memory address—to which packet data is directed for data processing—corresponds to a location in the host memory. The host processor preferably is operable to interrogate packet data stored in the host memory in accordance with one or more data processing operations.

In another embodiment, the network adapter includes an adapter data memory, wherein the second memory address corresponds to a location in the adapter data memory. In this embodiment, the network adapter preferably includes an adapter data processor that is operable to interrogate packet data stored in the adapter data memory in accordance with one or more data processing operations. The adapter data processor may be operable to perform encryption/decryption operations on packet data stored in the adapter data memory.

In another aspect, the invention features a processing system that includes a host memory, a host processor, and a network adapter for exchanging with a computer network information in the form of packets each including a packet header and packet data. The network adapter includes an adapter memory, an adapter processor, and a packet parser. The packet parser is configured to parse an information packet into a packet header and packet data and to direct the packet header to an adapter memory address for header processing by the adapter processor and to direct packet data to a host memory address for data processing by the host processor.

Another aspect of the invention features a packet processing method. In accordance with this method, an information packet is parsed into a packet header and packet data, and the packet header is directed to a first memory address for header processing and packet data is directed to a second memory address for data processing.

Other features and advantages of the invention will become apparent from the following description, including the drawings and the claims.

DESCRIPTION OF DRAWINGS

FIG. **1** is a diagrammatic view of a processing system coupled to a computer network.

FIG. **2** is a diagrammatic view of an information packet.

FIG. **3** is a block diagram of a processing system that includes a host processing unit, a host memory, and a network adapter.

FIG. 4A is a block diagram of a network adapter.

FIG. 4B is a flow diagram of a packet processing method performed by the network adapter implementation of FIG. 4A.

FIG. 5 is a block diagram of a network adapter.

FIG. 6A is a block diagram of a network adapter.

FIG. 6B is a flow diagram of a packet processing method performed by the network adapter implementation of FIG. 6A.

DETAILED DESCRIPTION

Referring to FIG. 1, in one embodiment, a processing system **10** is connected to a computer network **12**. Information is passed between processing system **10** and computer network **12** in the form of information packets **14**. The information exchange is implemented in accordance with a supported network protocol (e.g., transmission control protocol/internet protocol (TCP/IP), IEEE 802.3 or DIX Ethernet data communication protocols, real-time transport (RTP) protocol, or the asynchronous transfer mode (ATM) protocol). The network protocol defines a common set of communication rules and the format of the data being transmitted through the network. Processing system **10** may be a personal computer, a workstation, a server computer, a router, a peer device or other network node.

As shown in FIG. 2, each information packet **14** includes a packet header **16** and packet data **18**. Packet header **16** typically includes a number of fields that describe the contents of information packet **14**, including a destination address field, a source address field, and a length/type field. The destination address field identifies one or more computers in network **12** that should receive the associated information packet. The source address field identifies the network computer that originated the associated information packet. The length/type field may identify the combined length (in bytes) of header **16** and packet data **18**; alternatively, the length/type field may identify the type of network protocol used to format the associated information packet. In accordance with the supported network protocol, processing system **10** is configured to perform one or more protocol handling operations with respect to each packet received from network **12**. For example, processing system **10** may be configured to interrogate packet header **16** to check, process and route control information contained in information packet **14**.

Referring to FIG. 3, in one embodiment, processing system **10** includes a network adapter **20** that supports data communication between processing system **10** and network **12**. Processing system **10** also includes a host processing unit **22** and a host memory **24**. Host processing unit **22** may include one or more processors, each of which may be in the form of any one of various commercially available processors. Host processing unit **22** preferably runs under a multithreaded operating system (e.g., the UNIX operating system or the Windows NT Server operating system) and preferably is configured to execute communication software that supports network adapter **20**. Host memory **24** preferably includes a read only memory (ROM) that stores a basic input/output system (BIOS) containing start-up routines for processing system **10**, and a random access memory (RAM). In addition, host memory **24** may be divided into a global host (i.e., operating system) address space and a user address space. A system bus **26** couples host processing unit **22** to the various components of processing system **10**. System bus **26** may be a memory bus, a peripheral bus or a local bus, and may be compatible with any one of a variety of bus protocols, including PCI, VESA, Microchannel, ISA, and EISA. Processing system **10** may include additional components, including memory devices (e.g., a hard drive, a floppy drive, and a CD ROM drive that are connected to system bus **26** by respective interfaces), input devices (e.g., a keyboard, a mouse, a microphone, a joystick, and a touch pad), and output devices (e.g., a monitor, speakers, and a printer).

As described above, improved packet processing results may be achieved by separating packet header processing operations from packet data processing operations to enable such operations to be performed substantially in parallel. In the following embodiments, a packet parser is configured to parse the packet header information and the packet data information on the fly to improve the packet processing performance of processing system **10**.

Referring to FIG. 4A, in a host-based embodiment, network adapter **20** includes a packet parser **30**, an adapter processor **32**, an adapter memory **34**, and a system interface **36**. In operation, packet parser **30** interrogates a received information packet **14** (e.g., to determine the location where packet header **16** ends and packet data **18** begins). Next, packet parser **30** directs the packet header portion of information packet **14** to adapter memory **34** for header processing and directs the packet data portion of information packet **14** to system interface **36** for transmission to host memory **24** for data processing. Packet parser **30** includes a common reference tag with the packet header portion and the packet data portion for processes that must cross-reference packet header information with the associated packet data. For each network connection, adapter processor **32** programs packet parser **30** with an adapter memory address and a host memory address to which packet parser **30** should direct packet header **16** and packet data **18**, respectively. Adapter processor **32** is configured to interrogate packet header information stored in adapter memory **34** in accordance with one or more network protocol handling operations (e.g., firewall filtering, load balancing, and TCP/IP or RTP protocol handling operations). System interface **36** may include a direct memory access (DMA) controller configured to arbitrate between network adapter **20**, host memory **24**, and other devices that perform DMA transfers over system bus **26**. Packet data **18** may be transferred by DMA to host memory **24** as packet data is received by network adapter **20**. Thus, host processing unit **22** may perform data processing operations on packet data **18** stored in host memory **24** substantially in parallel with the protocol handling operations performed by adapter processor **32**.

Referring to FIG. 4B, in one host-based packet processing method, packet parser **30** may process an information packet **14** as follows. Packet parser **30** receives information packet **14** from computer network **12** through a communication port of processing system **10** (step **40**). Packet parser **30** interrogates information packet **14** and parses information packet **14** into packet header **16** and packet data **18** (step **42**). Packet parser **30** includes a common reference tag with the packet header portion and the packet data portion for processes that must cross-reference packet header information with the associated packet data. Packet parser **30** retrieves the adapter memory address assigned by adapter processor **32** for storage of packet header **16** (step **44**). Packet parser **30** directs packet header **16** to the assigned adapter memory address for header processing (e.g., network protocol handling operations) (step **46**). Packet parser **30** also retrieves the host memory address assigned by adapter processor **32** for storage of packet data **18** (step **48**). Packet parser **30** directs packet data **18** to the assigned host memory address for data processing (step **50**).

Referring to FIG. **5**, in another host-based embodiment, packet header processing may be performed substantially in parallel by two or more header processors. In this embodiment, network adapter **20** includes a packet parser **30**, a controller **52**, first and second header processors **54**, **56**, first and second header memories **58**, **60**, and a system interface **36**. In operation, packet parser **30** parses a received information packet **14**, and directs a portion of the packet header to first header memory **58** and directs the remaining portion of the packet header to second header memory **60**. Packet parser **30** also directs the packet data portion of information packet **14** to system interface **36** for transmission to host memory **24** for data processing. Packet parser **30** includes a common reference tag with the packet header portion and the packet data portion for processes that must cross-reference packet header information with the associated packet data. For each network connection, controller **52** programs packet parser **30** with the first header memory address, the second header memory address and the host memory address to which packet parser **30** should direct the first header portion, the second header portion and packet data **18**, respectively. First and second header processors **54**, **56** are configured to process packet header information stored in header memories **58**, **60** in accordance with one or more network protocol handling operations (e.g., firewall filtering, load balancing, and TCP/IP or RTP protocol handling operations). System interface **36** may include a direct memory access (DMA) controller that is configured to arbitrate between network adapter **20**, host memory **24**, and other devices that perform DMA transfers over system bus **26**. Packet data **18** may be transferred by DMA to host memory **24** as packet data is received by network adapter **20**. Thus, host processing unit **22** may perform data processing operations on packet data **18** stored in host memory **24** substantially in parallel with the protocol handling lo operations performed by first and second header processors **54**, **56**.

Other embodiments, may include additional header processors for processing respective portions of packet header **16**. Each processor may be assigned a respective dedicated memory module (e.g., a register), or each processor may be assigned a respective memory space in a shared common memory (e.g., a RAM module).

Referring to FIG. **6**A, in a non-host-based embodiment, network adapter **20** is configured to perform both header processing operations and data processing operations on a received information packet **14**. In this embodiment, network adapter **20** includes a packet parser **30**, a header processor **72**, a header memory **74**, a data processor **76**, a data memory **78**, and a system interface **36**. In operation, packet parser **30** parses a received information packet **14**, and directs the packet header portion of information packet **14** to header memory **74** for header processing and directs the packet data portion of information packet **14** to data memory **78** for data processing. Packet parser **30** includes a common reference tag with the packet header portion and the packet data portion for processes that must cross-reference packet header information with the associated packet data. For each network connection, header processor **72** programs packet parser **30** with a header memory address and a data memory address to which packet parser **30** should direct packet header **16** and packet data **18**, respectively. Header processor **72** is configured to interrogate packet header information stored in header memory **74** in accordance with one or more network protocol handling operations (e.g., firewall filtering, load balancing, and TCP/IP or RTP protocol handling operations). Data processor **76** may perform one or more data processing operations (e.g., checksumming or other error detecting, or one or more data encryption/decryption operations) on packet data **18** stored in data memory **78**. Data processor **76** may operate substantially in parallel with header processor **32**.

Referring to FIG. **6**B, in one embodiment, the packet parser implementation of FIG. **6**A may process an information packet **14** as follows. Packet parser **30** receives information packet **14** from computer network **12** through a communication port of processing system **10** (step **80**). Packet parser **30** interrogates information packet **14** and parses information packet **14** into packet header **16** and packet data **18** (step **82**). Packet parser **30** includes a common reference tag with the packet header portion and the packet data portion for processes that must cross-reference packet header information with the associated packet data. Packet parser **30** retrieves the header memory address assigned by header processor **72** for storage of packet header **16** (step **84**). Packet parser **30** directs packet header **16** to the assigned header memory address for protocol processing (step **86**). Packet parser **30** also retrieves the data memory address assigned by adapter processor **72** for storage of packet data **18** (step **88**). Packet parser **30** directs packet data **18** to the assigned data memory address for data processing (step **90**). Processed packet header information and processed packet data information may be transferred to host memory **24** by DMA through system interface **36**.

The systems and methods described herein are not limited to any particular hardware or software configuration, but rather they may be implemented in any computing or processing environment. The packet parsers and adapter processors may be programmed using a high level procedural or object oriented programming language; however, the program may be implemented in assembly language or machine language, if desired. In any case, the programming language may be a compiled or interpreted language. For example, the parser implementations and adapter processors described above may be programmable logic devices (PLD's) that are programmed in VHDL (VLSI Hardware Description Language—IEEE 1164).

In addition, each of the above-described host-based embodiments may include a host processor interface for configuring a conventional host processor to receive and process packet data without preliminary host processing of the associated packet header. Such a host processor interface preferably is implemented in software, but may be implemented in firmware, if desired.

Other embodiments are within the scope of the claims.

What is claimed is:

1. A network adapter for exchanging with a computer network information in the form of packets each including a packet header and packet data, the network adapter comprising:

a packet parser configured to parse an information packet into a packet header and packet data and to direct the packet header to a first memory address for protocol processing and to direct packet data to a second memory address for data processing;

an adapter header memory, wherein the first memory address corresponds to a location in the adapter header memory; and

an adapter processor operable to interrogate packet header information stored in the adapter header memory in accordance with one or more network protocol handling operations, wherein the adapter processor is oper-

able to program the packet parser with the first and second memory addresses for each network connection.

2. The network adapter of claim **1**, wherein the packet parser is configured to parse the packet header into two or more header components and to direct each header component to a respective memory address.

3. The network adapter of claim **1**, wherein the network adapter is incorporated into a data processing system having a host memory and a host processor.

4. The network adapter of claim **3**, wherein the second memory address corresponds to a location in the host memory.

5. The network adapter of claim **4**, wherein the host processor is operable to interrogate packet data stored in the host memory in accordance with one or more data processing operations.

6. The network adapter of claim **1**, further comprising an adapter data memory, wherein the second memory address corresponds to a location in the adapter data memory.

7. The network adapter of claim **6**, further comprising an adapter data processor operable to interrogate packet data stored in the adapter data memory in accordance with one or more data processing operations.

8. A network adapter for exchanging with a computer network information in the form of packets each including a packet header and packet data, the network adapter comprising:

a packet parser configured to parse an information packet into a packet header and packet data and to direct the packet header to a first memory address for protocol processing and to direct packet data to a second memory address for data processing, wherein the packet parser is configured to parse the packet header into two or more header components and to direct each header component to a respective memory address; and

two or more adapter processors each operable to process a respective one or more stored header components substantially in parallel.

9. A network adapter for exchanging with a computer network information in the form of packets each including a packet header and packet data, the network adapter comprising:

a packet parser configured to parse an information packet into a packet header and packet data and to direct the packet header to a first memory address for protocol processing and to direct packet data to a second memory address for data processing;

an adapter data memory, wherein the second memory address corresponds to a location in the adapter data memory; and

an adapter data processor operable to interrogate packet data stored in the adapter data memory in accordance with one or more data processing operations, wherein the adapter data processor is operable to perform encryption/decryption operations on packet data stored in the adapter data memory.

* * * * *