US 20060037072A1

(19) United States

(12) Patent Application Publication

(10) Pub. No.: US 2006/0037072 A1

(43) Pub. Date: Feb. 16, 2006

Rao et al.

(54) SYSTEMS AND METHODS FOR NETWORK DISRUPTION SHIELDING TECHNIQUES

(75) Inventors: **Goutham P. Rao**, San Jose, CA (US); **Robert A. Rodriguez**, San Jose, CA (US); **Eric R. Brueggemann**, Cupertino, CA (US)

Correspondence Address:
CHOATE, HALL & STEWART LLP
TWO INTERNATIONAL PLACE
BOSTON, MA 02110 (US)

(73) Assignee: **Citrix Systems, Inc.**, Fort Lauderdale, FL (US)

(21) Appl. No.: **11/187,512**

(22) Filed: **Jul. 22, 2005**

Related U.S. Application Data

(60) Provisional application No. 60/590,837, filed on Jul. 23, 2004. Provisional application No. 60/601,431, filed on Aug. 13, 2004. Provisional application No. 60/607,420, filed on Sep. 3, 2004. Provisional application No. 60/608,814, filed on Sep. 10, 2004.

Publication Classification

(51) **Int. Cl.**
G06F 15/16 (2006.01)

(52) **U.S. Cl.** **726/14**

(57) **ABSTRACT**

The present invention is generally directed towards a remote access architecture for providing peer-to-peer communications and remote access connectivity. In one embodiment, the remote access architecture of the present provides a method for establishing a direct connection between peer computing devices via a third computing device, such as a gateway. Additionally, the present invention provides the following techniques to optimize peer-to-peer communications: 1) false acknowledgement of receipt of network packets allowing communications via a lossless protocol of packets constructed for transmission via a lossy protocol, 2) payload shifting of network packets allowing communications via a lossless protocol of packets constructed for transmission via a lossy protocol, 3) reduction of packet fragmentation by adjusting the maximum transmission unit (MTU) parameter, accounting for overhead due to encryption, 4) application-aware prioritization of client-side network communications, and 5) network disruption shielding for reliable and persistent network connectivity and access.

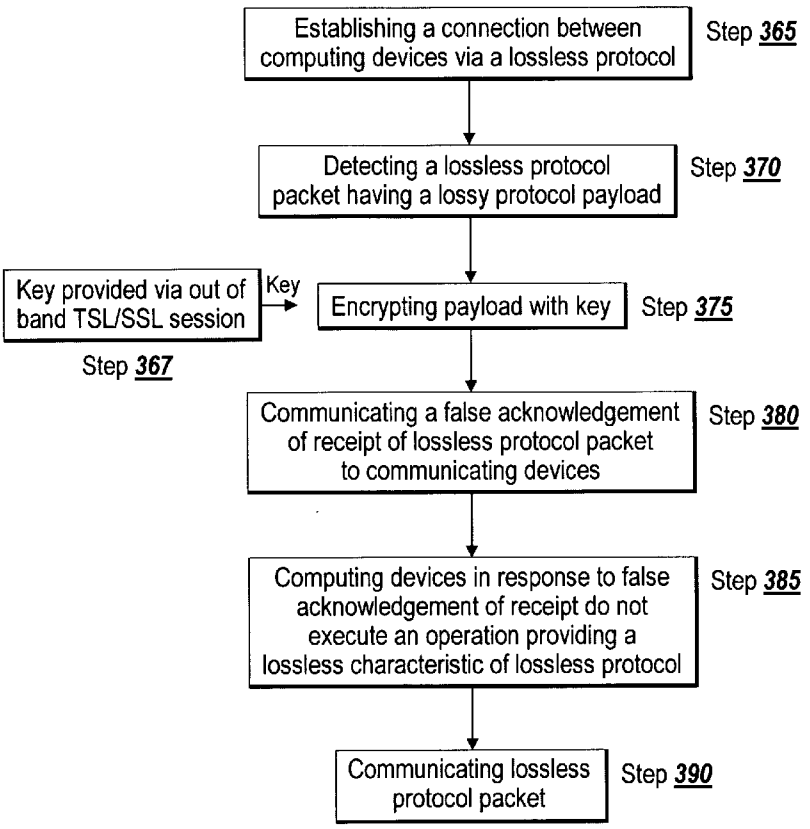

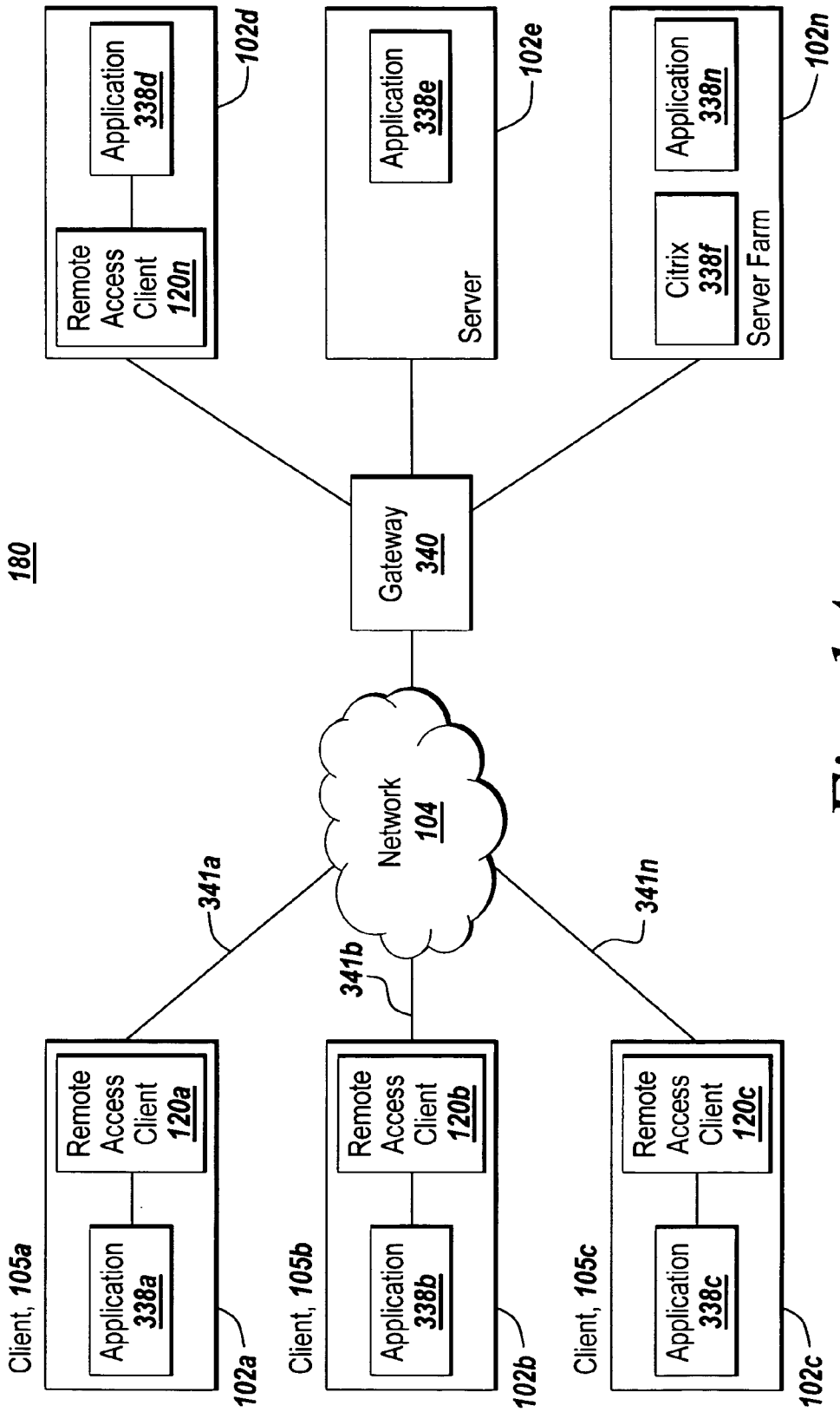
180
Client, 105a
Remote Access Client 120a
Application 338a
102a
Client, 105b
Remote Access Client 120b
Application 338b
102b
Client, 105c
Remote Access Client 120c
Application 338c
102c
341a
341b
341n
Network 104
Gateway 340
Remote Access Client 120n
Application 338d
102d
Application 338e
Server
102e
Citrix 338f
Application 338n
Server Farm
102n

Fig. 1A

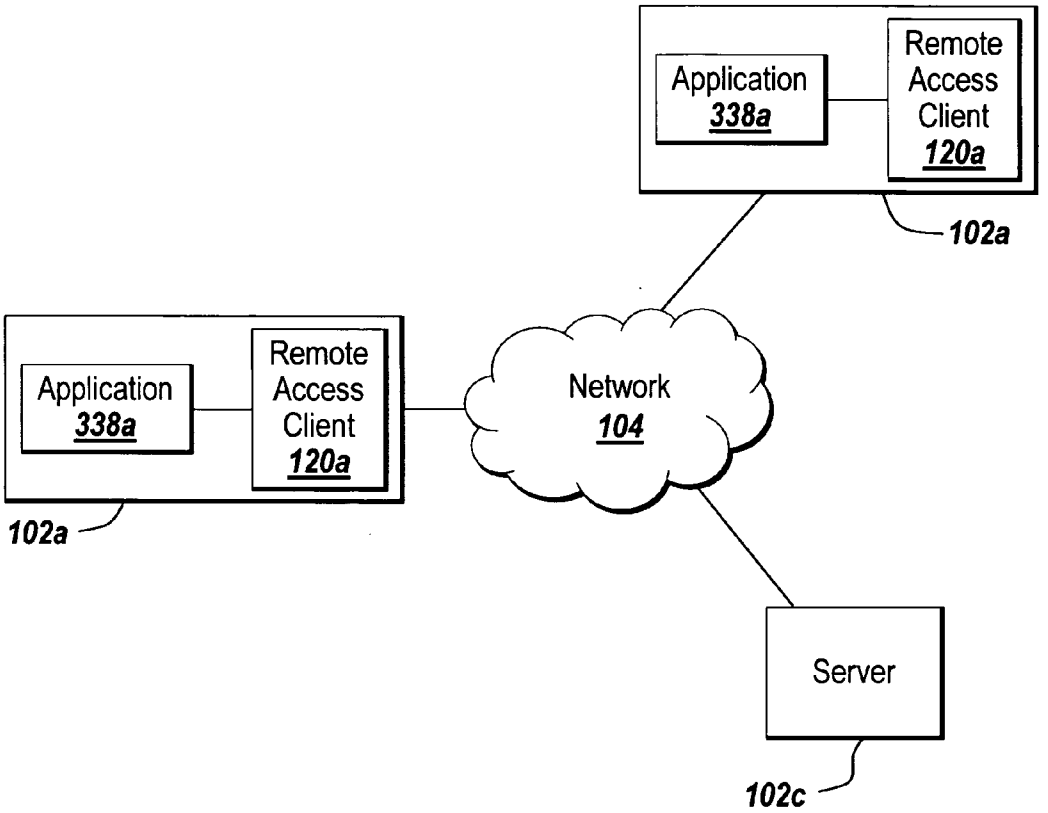
Application
338a
Remote
Access
Client
120a
102a
Application
338a
Remote
Access
Client
120a
102a
Network
104
Server
102c

Fig. 1B

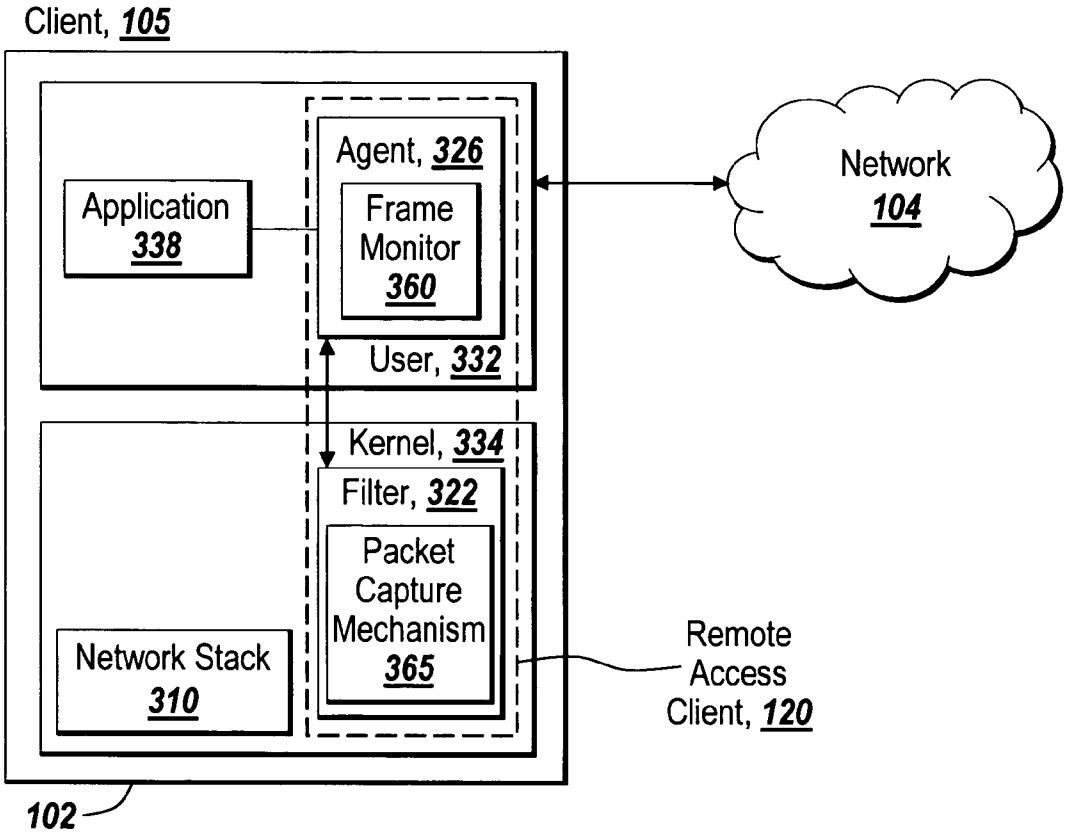
Client, 105
Agent, 326
Application 338
Frame Monitor 360
User, 332
Network 104
Kernel, 334
Filter, 322
Packet Capture Mechanism 365
Network Stack 310
Remote Access Client, 120
102

Fig. 1C

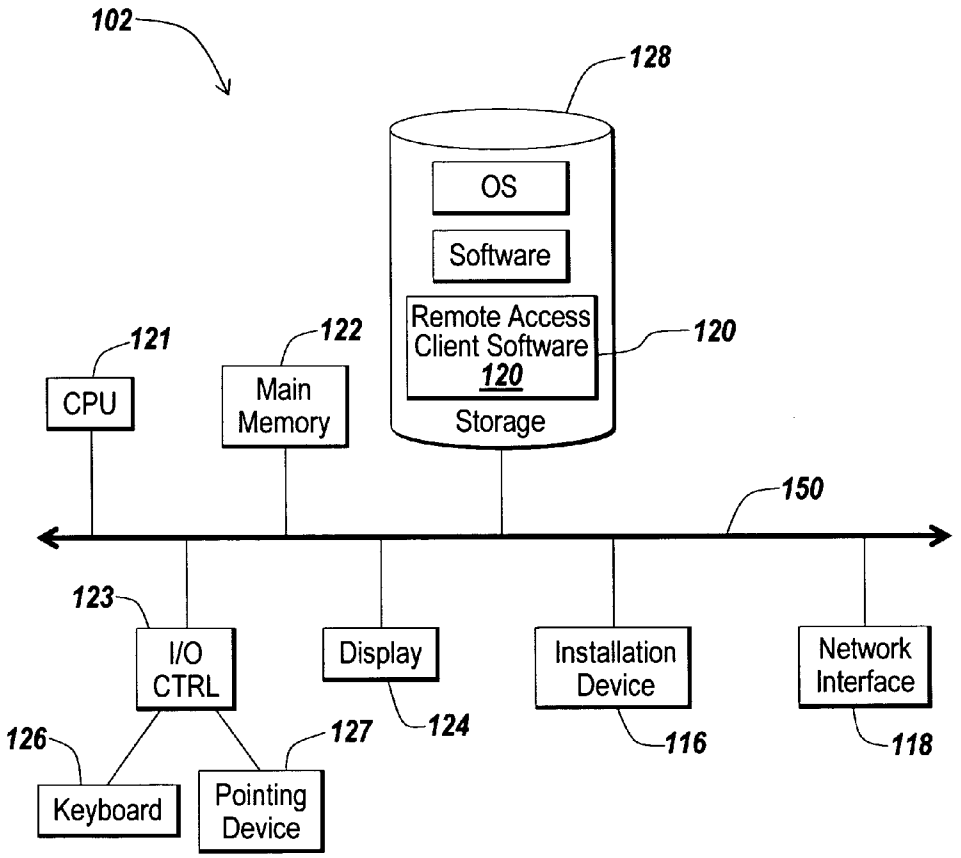
102
128
OS
Software
Remote Access Client Software 120
120
Storage
121
CPU
122
Main Memory
150
123
I/O CTRL
Display
124
Installation Device
116
Network Interface
118
126
Keyboard
127
Pointing Device

Fig. 1D

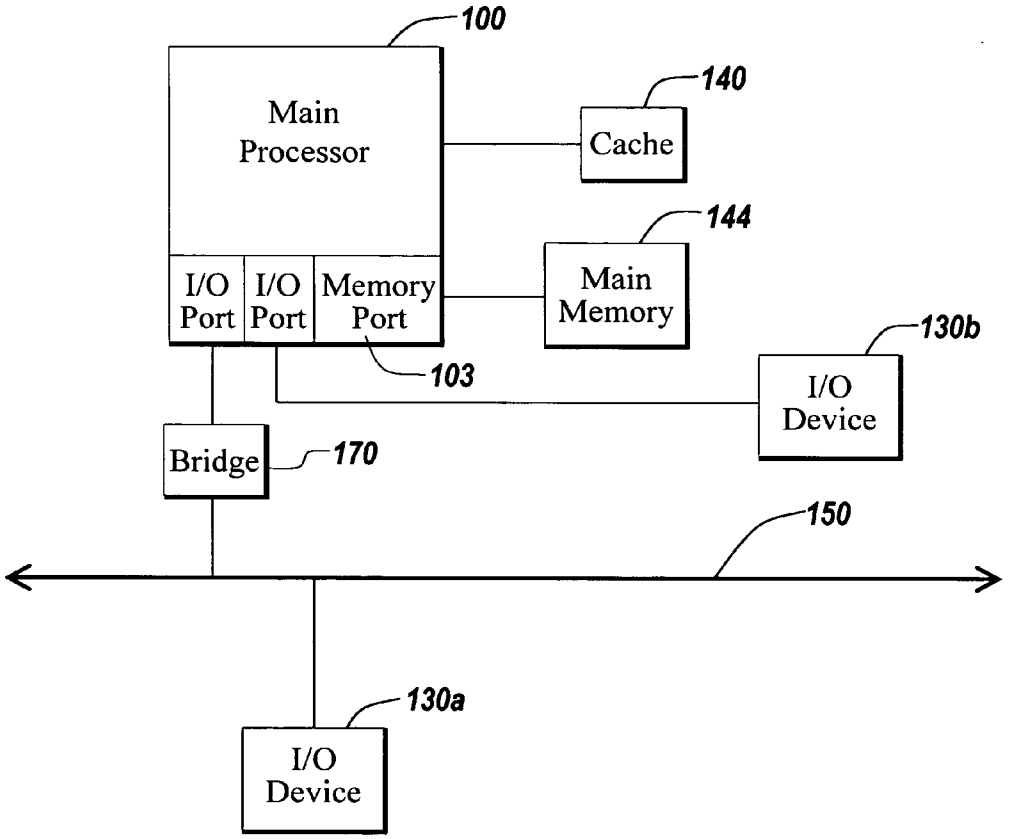
100
Main Processor
140
Cache
144
Main Memory
I/O Port
I/O Port
Memory Port
103
130b
I/O Device
Bridge
170
150
130a
I/O Device

Fig. 1E

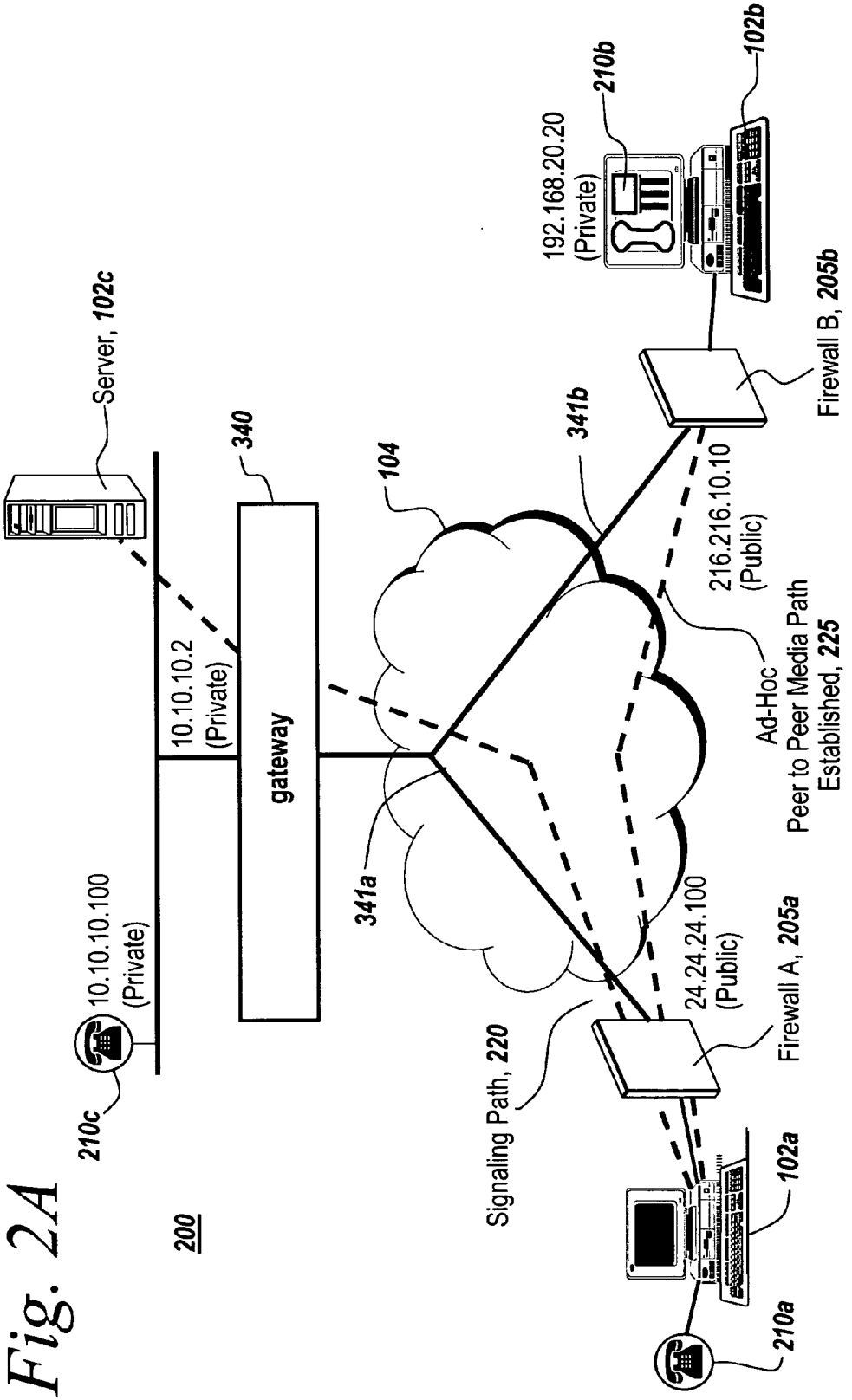
Server, 102c
340
104
341b
192.168.20.20
(Private)
210b
102b
Firewall B, 205b
10.10.10.2
(Private)
gateway
216.216.10.10
(Public)
Ad-Hoc
Peer to Peer Media Path
Established, 225
341a
10.10.10.100
(Private)
210c
24.24.24.100
(Public)
Firewall A, 205a
Signaling Path, 220
102a
210a
200

Fig. 2A

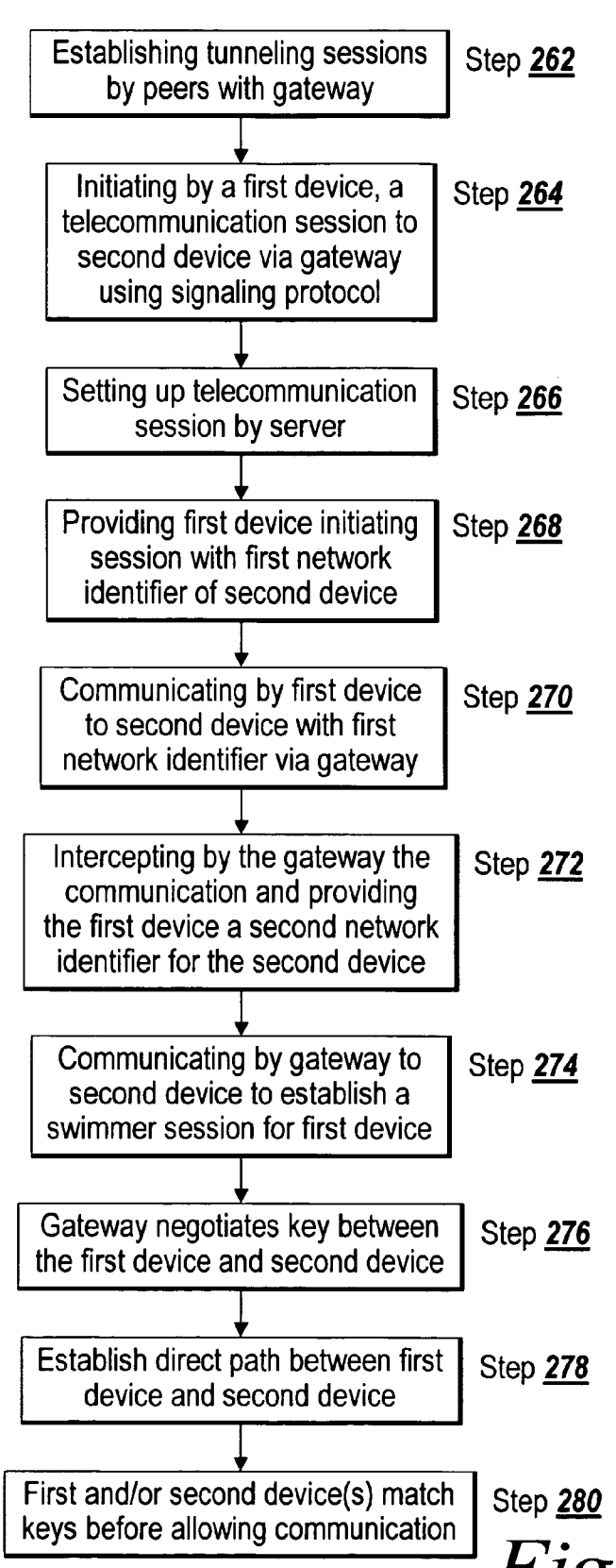
260
Establishing tunneling sessions by peers with gateway
Step 262
Initiating by a first device, a telecommunication session to second device via gateway using signaling protocol
Step 264
Setting up telecommunication session by server
Step 266
Providing first device initiating session with first network identifier of second device
Step 268
Communicating by first device to second device with first network identifier via gateway
Step 270
Intercepting by the gateway the communication and providing the first device a second network identifier for the second device
Step 272
Communicating by gateway to second device to establish a swimmer session for first device
Step 274
Gateway negotiates key between the first device and second device
Step 276
Establish direct path between first device and second device
Step 278
First and/or second device(s) match keys before allowing communication
Step 280

Fig. 2B

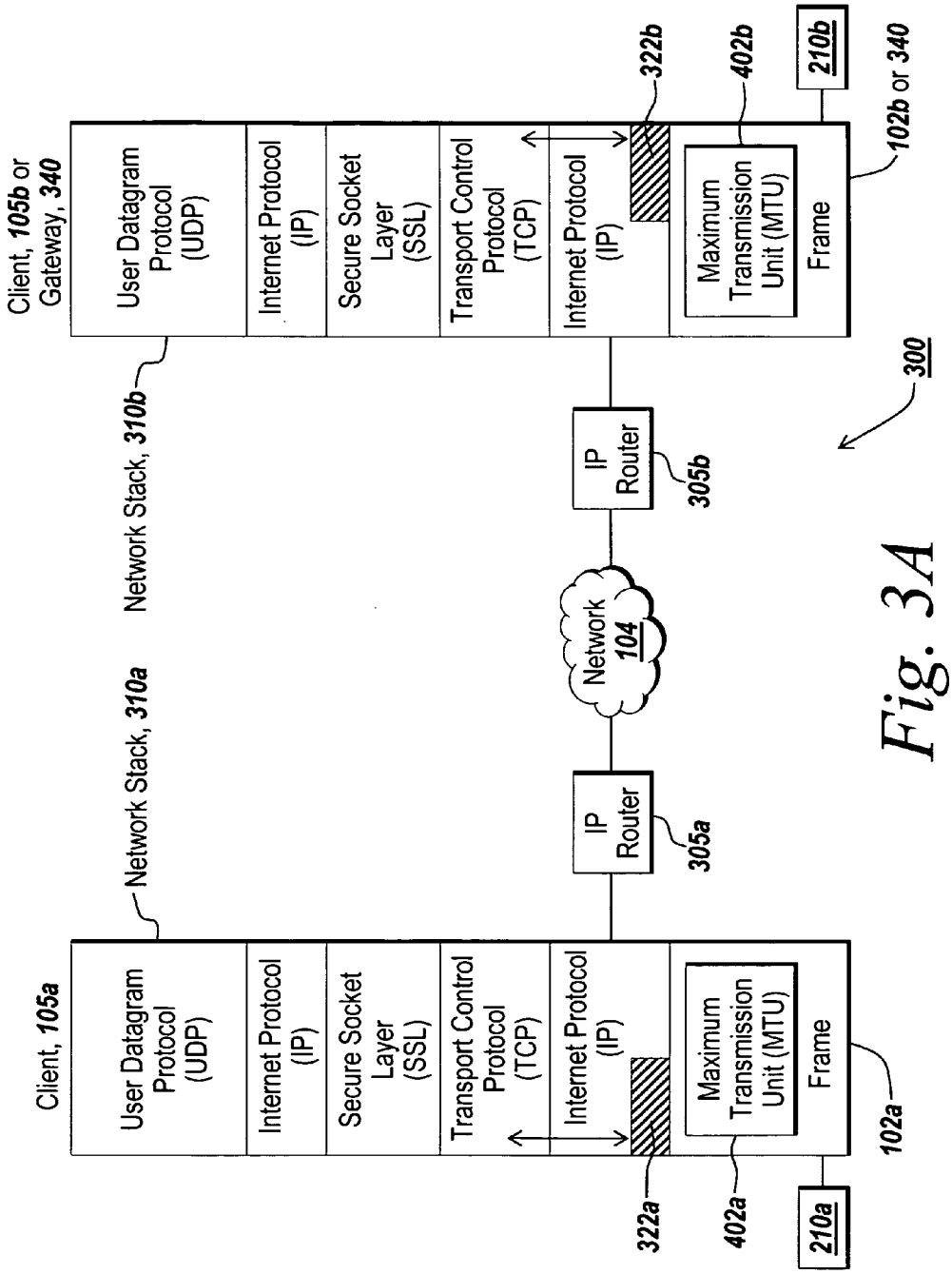
Client, 105b or Gateway, 340
User Datagram Protocol (UDP)
Internet Protocol (IP)
Secure Socket Layer (SSL)
Transport Control Protocol (TCP)
Internet Protocol (IP)
322b
Maximum Transmission Unit (MTU)
402b
Frame
210b
102b or 340
Network Stack, 310b
IP Router
305b
300
Network 104
Network Stack, 310a
IP Router
305a
Client, 105a
User Datagram Protocol (UDP)
Internet Protocol (IP)
Secure Socket Layer (SSL)
Transport Control Protocol (TCP)
Internet Protocol (IP)
322a
Maximum Transmission Unit (MTU)
402a
Frame
210a
102a

Fig. 3A

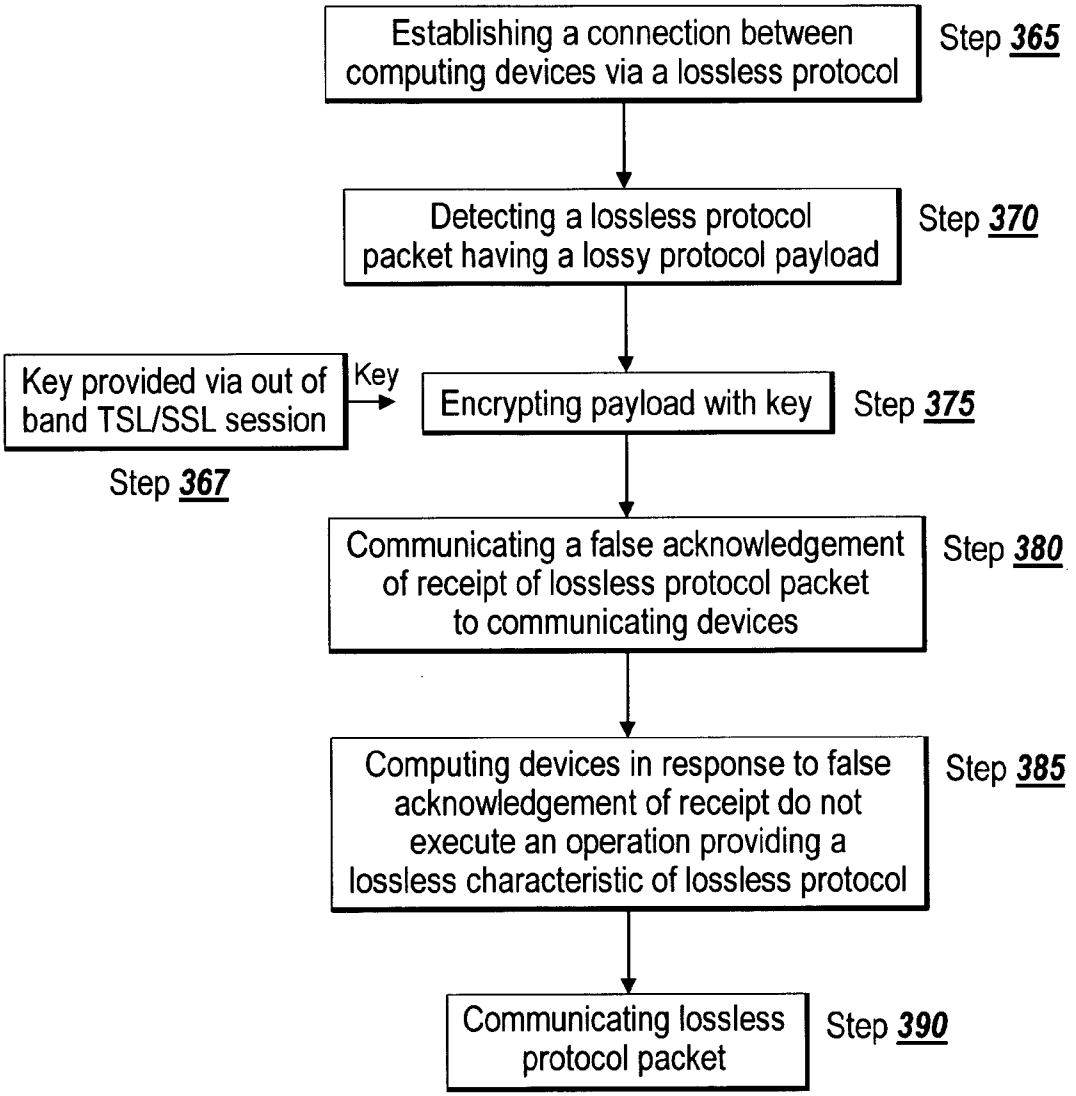
Establishing a connection between computing devices via a lossless protocol
Step 365
Detecting a lossless protocol packet having a lossy protocol payload
Step 370
Key provided via out of band TSL/SSL session
Key
Encrypting payload with key
Step 375
Step 367
Communicating a false acknowledgement of receipt of lossless protocol packet to communicating devices
Step 380
Computing devices in response to false acknowledgement of receipt do not execute an operation providing a lossless characteristic of lossless protocol
Step 385
Communicating lossless protocol packet
Step 390

Fig. 3B

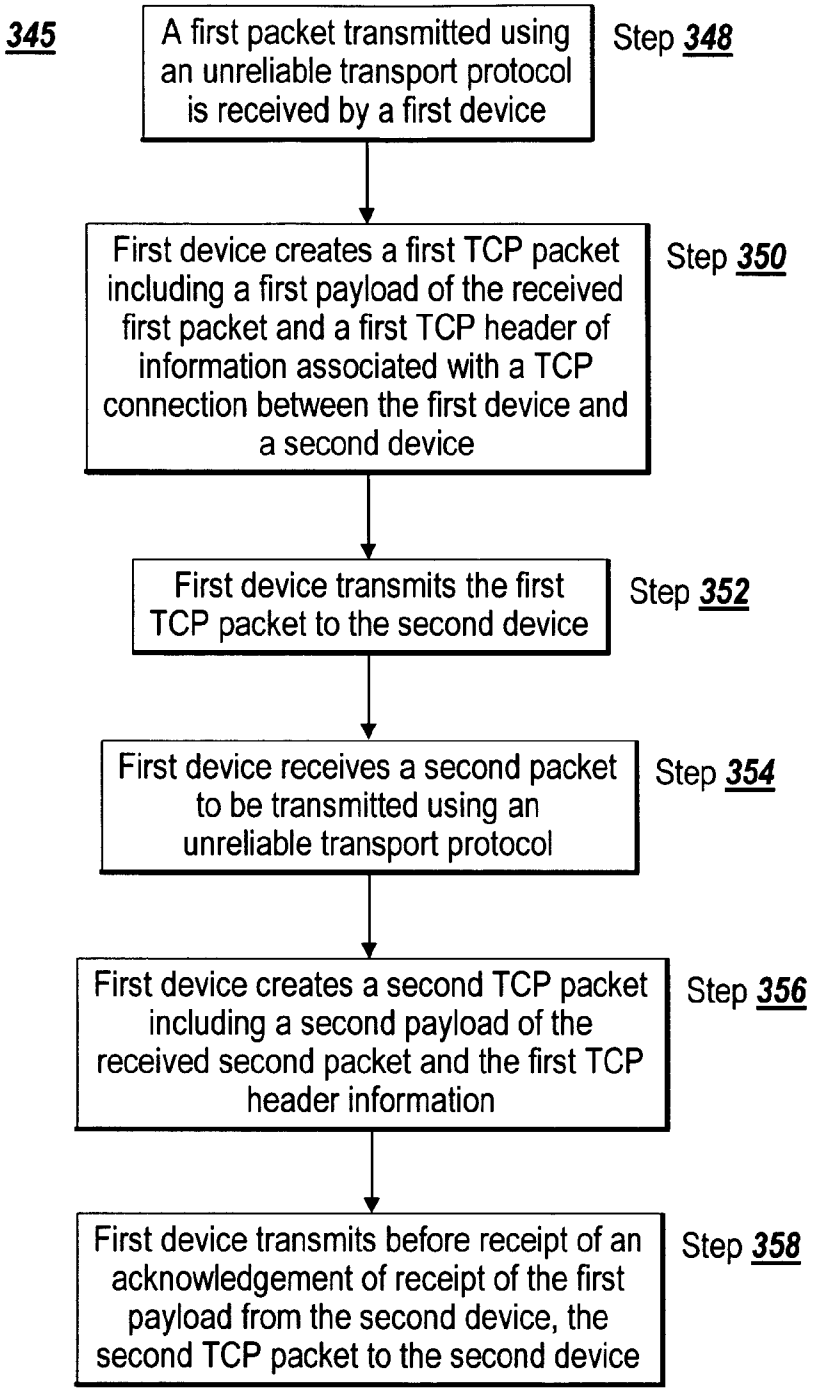
345
A first packet transmitted using an unreliable transport protocol is received by a first device
Step 348
First device creates a first TCP packet including a first payload of the received first packet and a first TCP header of information associated with a TCP connection between the first device and a second device
Step 350
First device transmits the first TCP packet to the second device
Step 352
First device receives a second packet to be transmitted using an unreliable transport protocol
Step 354
First device creates a second TCP packet including a second payload of the received second packet and the first TCP header information
Step 356
First device transmits before receipt of an acknowledgement of receipt of the first payload from the second device, the second TCP packet to the second device
Step 358

Fig. 3C

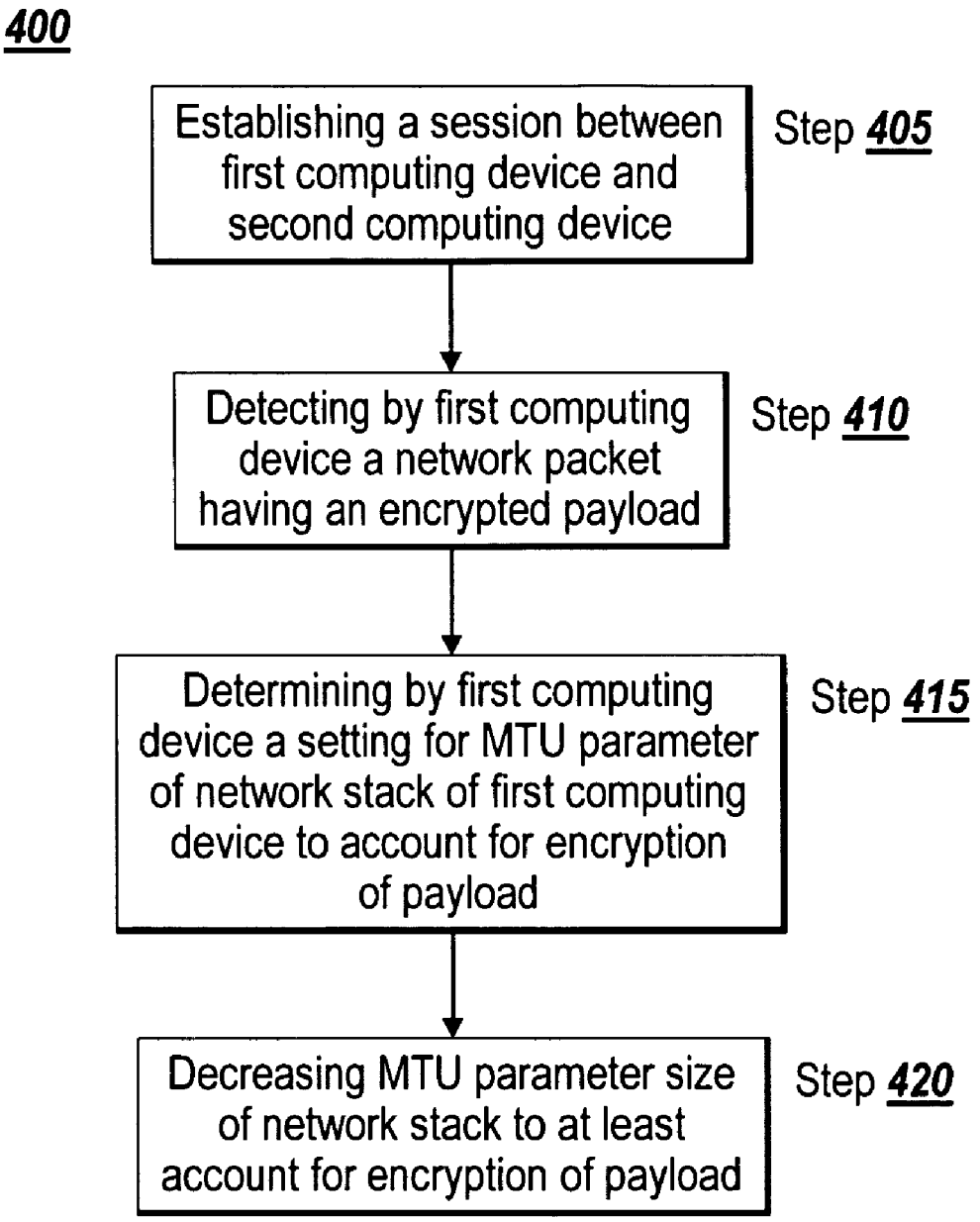
400
Establishing a session between first computing device and second computing device
Step 405
Detecting by first computing device a network packet having an encrypted payload
Step 410
Determining by first computing device a setting for MTU parameter of network stack of first computing device to account for encryption of payload
Step 415
Decreasing MTU parameter size of network stack to at least account for encryption of payload
Step 420

Fig. 4

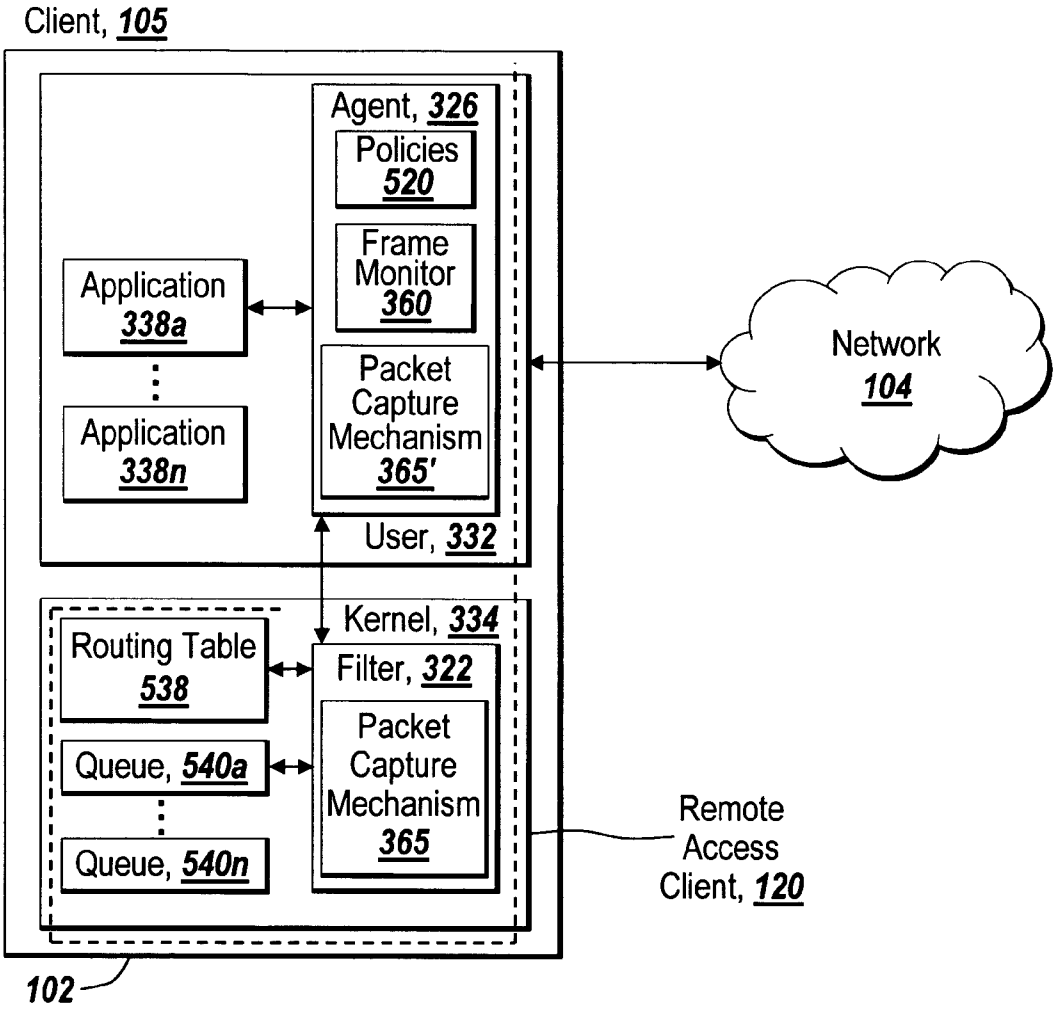
Client, 105
Agent, 326
Policies 520
Frame Monitor 360
Application 338a
Application 338n
Packet Capture Mechanism 365'
User, 332
Network 104
Kernel, 334
Routing Table 538
Filter, 322
Queue, 540a
Queue, 540n
Packet Capture Mechanism 365
Remote Access Client, 120
102

Fig. 5A

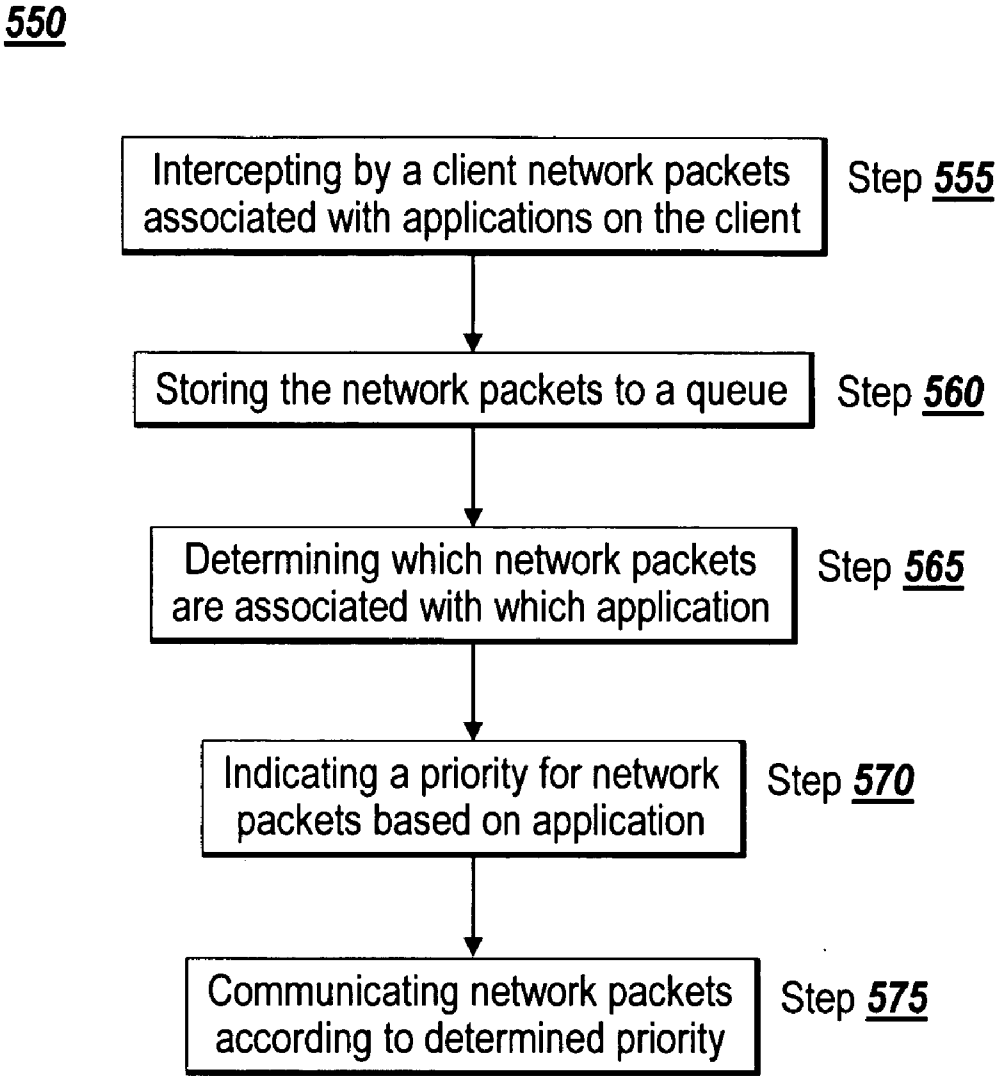
550
Intercepting by a client network packets associated with applications on the client
Step 555
Storing the network packets to a queue
Step 560
Determining which network packets are associated with which application
Step 565
Indicating a priority for network packets based on application
Step 570
Communicating network packets according to determined priority
Step 575

Fig. 5B

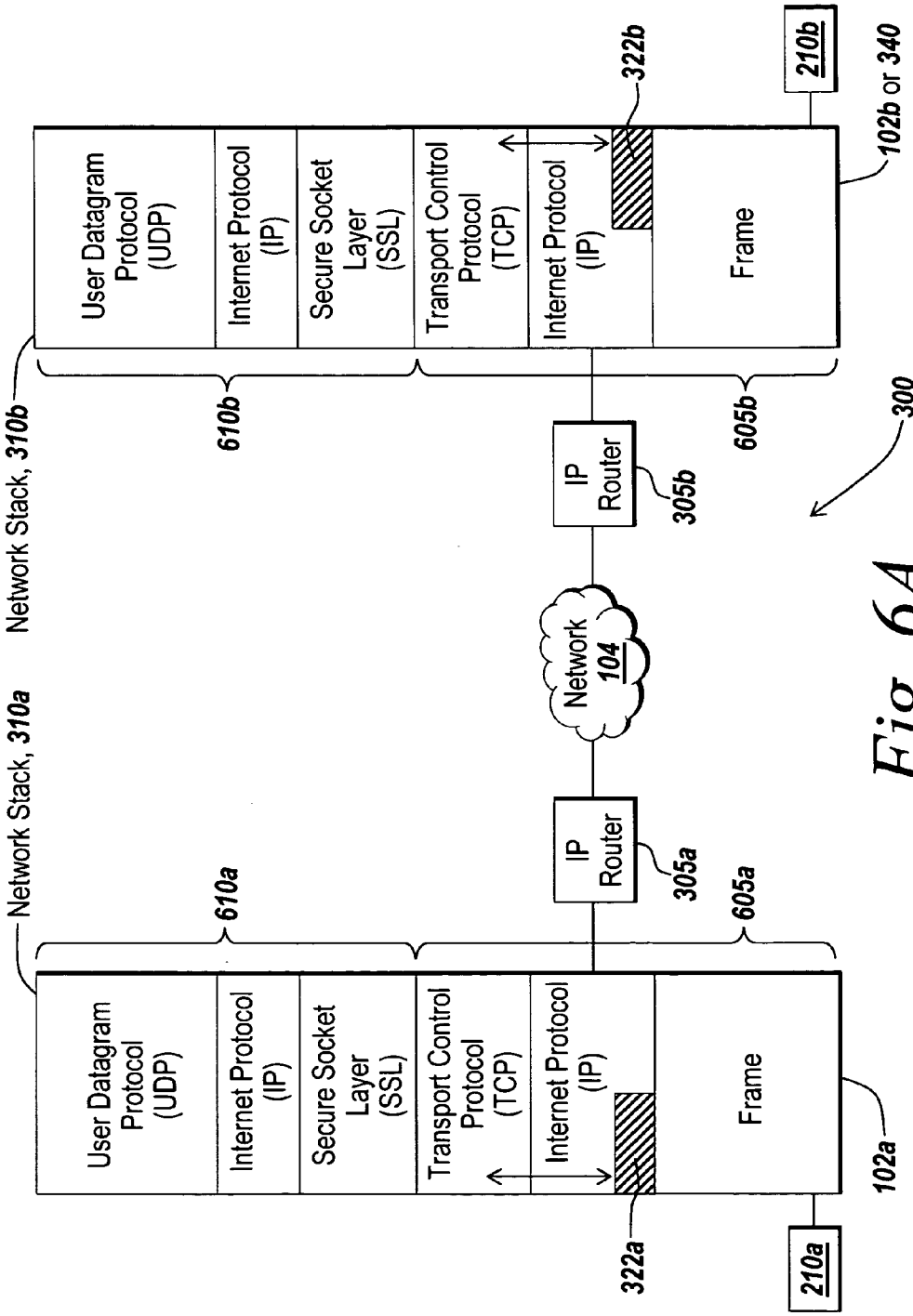
Network Stack, 310b
User Datagram Protocol (UDP)
Internet Protocol (IP)
Secure Socket Layer (SSL)
Transport Control Protocol (TCP)
Internet Protocol (IP)
Frame
322b
210b
102b or 340
610b
605b
IP Router
305b
300
Network 104
IP Router
305a
Network Stack, 310a
610a
605a
User Datagram Protocol (UDP)
Internet Protocol (IP)
Secure Socket Layer (SSL)
Transport Control Protocol (TCP)
Internet Protocol (IP)
Frame
322a
210a
102a

Fig. 6A

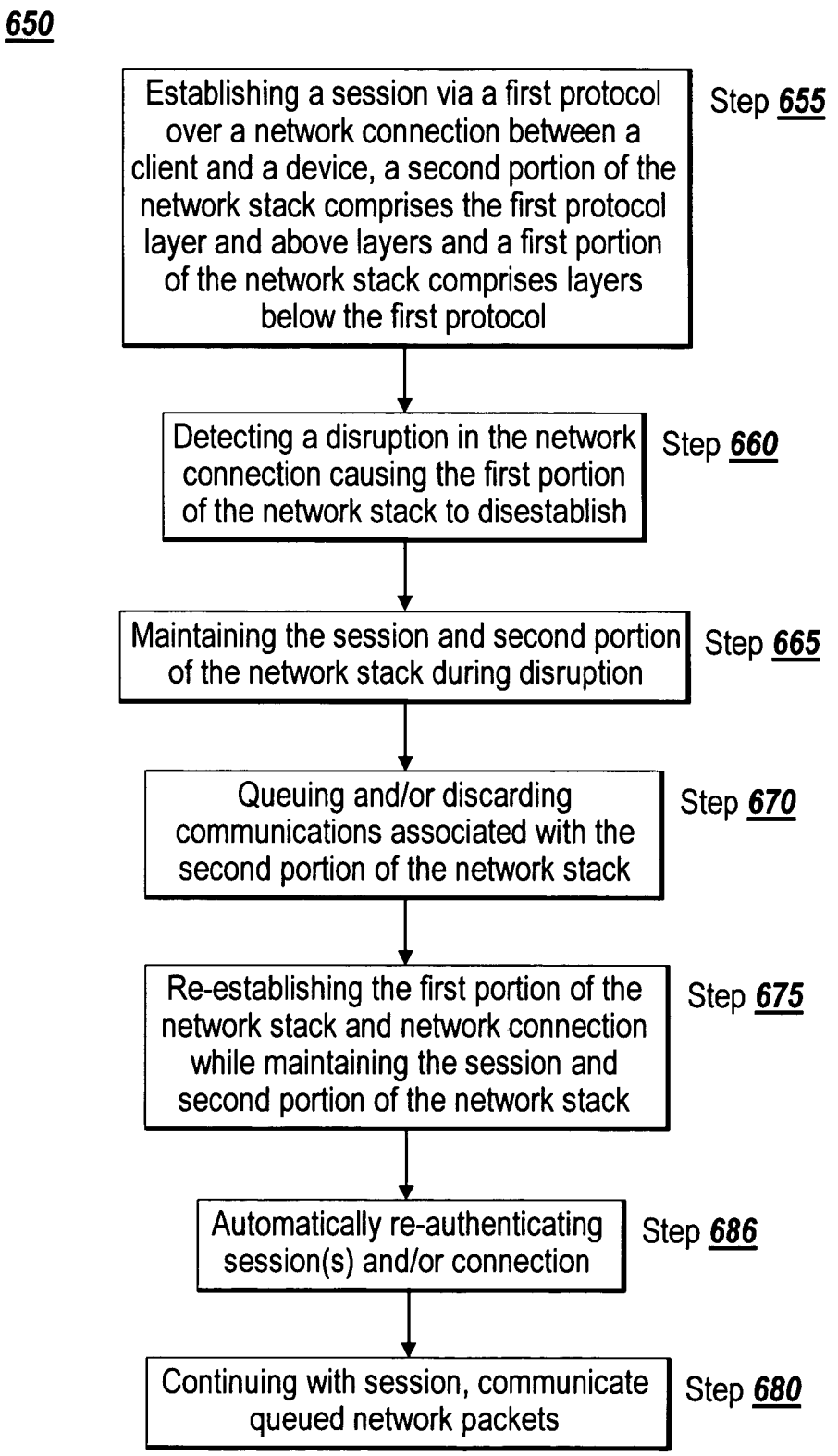
650
Establishing a session via a first protocol over a network connection between a client and a device, a second portion of the network stack comprises the first protocol layer and above layers and a first portion of the network stack comprises layers below the first protocol
Step 655
Detecting a disruption in the network connection causing the first portion of the network stack to disestablish
Step 660
Maintaining the session and second portion of the network stack during disruption
Step 665
Queuing and/or discarding communications associated with the second portion of the network stack
Step 670
Re-establishing the first portion of the network stack and network connection while maintaining the session and second portion of the network stack
Step 675
Automatically re-authenticating session(s) and/or connection
Step 686
Continuing with session, communicate queued network packets
Step 680

Fig. 6B

SYSTEMS AND METHODS FOR NETWORK DISRUPTION SHIELDING TECHNIQUES

RELATED APPLICATIONS

[0001] This present application claims priority to U.S. Provisional Patent Application No. 60/590,837, entitled "Ad Hoc Distributed Networks And Remote Access Architecture", filed Jul. 23, 2004, and U.S. Provisional Patent Application No. 60/601,431, entitled "System And Method For Assuring Redundancy In Remote Access Solution", filed Aug. 13, 2004, and U.S. Provisional Patent Application No. 60/607,420, entitled "Virtual Network Bridging", filed Sep. 3, 2004, and U.S. Provisional Patent Application No. 60/608,814, entitled "System And Method For Assuring Redundancy In Remote Access Solution", filed Sep. 10, 2004, all of which are incorporated herein by reference.

TECHNICAL FIELD

[0002] The invention generally relates to optimizing peer-to-peer network communications, and in particular, to techniques for shielding a network disruption from a device.

BACKGROUND INFORMATION

[0003] Communications over a network between two computers, for example a client and a server, can be implemented using a variety of known communication protocols. Often, however, the network connection is susceptible to breakdown. A wireless connection between a client and a server, for example, is often unreliable. In other cases, the network connection is intermittent. For example, a connection can be lost when one enters an elevator or tunnel and may only be capable of being restored following one's exit from the elevator or tunnel. In another example, a connection can be disrupted when a mobile computing device moves from network access point to network access point, such as in a wireless network topology.

[0004] If an established communication session between the client and the server computer abnormally terminates, the client generally has to re-establish the connection by starting a new communication session. To begin the new communication session, the user typically has to retransmit the authentication credentials, such as a login/password pair, to the server computer so that the server computer can authorize the user for the new communication session. This retransmission of the authentication credentials of a user across multiple communication sessions repeatedly exposes the authentication credentials of that user to potential attackers, thereby decreasing the level of security of the authentication credentials. In addition, this often is a slow process that also results in user frustration and inefficiency. Furthermore, in establishing a new communication session, the network may require the client obtains a new network identifier, such as an internet protocol address. The applications or programs on the client may need to be restarted because of the change in the client's network identifier. Thus, it would be desirable to shield the computing devices from network disruptions.

SUMMARY OF THE INVENTION

[0005] The present invention is generally directed towards a remote access architecture for providing peer-to-peer communications and remote access connectivity. In one embodiment, the remote access architecture of the present invention provides a method for establishing a direct connection between peer computing devices via a third computing device, such as a gateway. Additionally, the present invention provides various techniques for optimizing peer-to-peer communications, including real-time communications such as voice over internet protocol (VoIP) signaling and media, video, and other real-time data applications such as web collaboration, screen or desktop sharing, and instant messaging. The present invention provides the following peer to peer optimization techniques: 1) false acknowledgement of receipt of network packets allowing communications via a lossless protocol of packets constructed for transmission via a lossy protocol, 2) payload shifting of network packets allowing communications via a lossless protocol of packets constructed for transmission via a lossy protocol, 3) reduction of packet fragmentation by adjusting the maximum transmission unit (MTU) parameter, accounting for overhead due to encryption, 4) application-aware prioritization of client-side network communications, and 5) network disruption shielding for reliable and persistent network connectivity and access, such as for mobile computing.

[0006] In one aspect, the present invention relates to a method for establishing a peer-to-peer communication session between a first computing device on a first network and a second computing device on a second network. The first network may be disconnected from and not routable to the second network. The method includes establishing, by the first computing device, a first tunneling session with a third computing device, and establishing, by the second computing device, a second tunneling session with the third computing device. The third computing device may be a gateway, such as an SSL VPN gateway. The first computing device initiates a communication session to the second computing device via the third computing device, such as via a signaling protocol. A server receives a signal to establish the initiated communication session, and the server communicates to the first computing device a first network address comprising a network address of the second computing device associated with the second tunneling session. The first computing device communicates a request to initiate a connection with the second computing device using the first network address. The method further includes intercepting, by the third computing device, the request, and providing the first computing device a second network address for the second computing device. The second network address identifies a public network address associated with the second computing device. The third computing device communicates a request to the second computing device to allow a connection from the first computing device using the second network address, such as via a swimmer session traversing a firewall.

[0007] In one embodiment of the present invention, the first tunneling session or the second tunneling session is established using a Secure Socket Layer or a virtual private network The third computing device may be a remote access gateway. In another embodiment, the second computing device is located behind a firewall associated with the second network address.

[0008] In another embodiment, the method of the present invention includes providing, by the third computing device, the second network address to the first computing device by

communicating an out of band signal to the first computing device via the first tunneling session. In an additional embodiment, the method of includes providing, by the second computing device, a forward hole in a firewall for the first computing device to communicate to the second computing device using the second network address.

[0009] In a further embodiment of the present invention, the third computing device communicates a key to the first computing device and the second computing device. The first computing device and the second computing device may exchange keys. Additionally, the first and second computing device may check that the key received from the other computing device matches before transmitting data to the other computing device.

[0010] In some embodiments of the present invention, the method associates a first telecommunication device with the first computing device, and associates a second telecommunication device with the second computing device. The first telecommunication device or the second telecommunication device may include a software component or a hardware component, such as a hard or soft VoIP telephone. In one embodiment, the method of the present invention includes establishing a telecommunication session between the first telecommunication device and the second telecommunication device via the connection between the first and second computing devices. The first telecommunication device and the second telecommunication device may communicate over the telecommunication session without traversing the third computing device.

[0011] In another embodiment of the present invention, the method communicates a remote display protocol via the connection between the first computing device and the second computing device. The remote desktop protocol may include the Independent Computing Architecture protocol or the Remote Desktop Protocol. In yet a further embodiment, the method may include sharing a screen view or screen data of the first computing device with the second computing device via the connection.

[0012] In one aspect, the present invention relates to a method performed in a gateway for establishing a peer-to-peer communication session between a first computing device on a first network and a second computing device on a second network. The first network may be disconnected from and not routable to the second network. The method includes establishing a first tunneling session with the first computing device on a first network, and establishing a second tunneling session with the second computing device on the second network. The gateway receives a request by the first computing device to initiate a communication session with the second computing device. The first computing device provides a first network address for contacting the second computing device. The first network address identifies a network address of the second computing device associated with the second tunneling session. The gateway receives a request by the first computing device to initiate a connection with the second computing device using the first network address, intercepts the request to initiate the connection, and provides the first computing device a second network address for the second computing device. The second network address identifies a public network address associated with the second computing device. The gateway communicates to the second computing device a request to allow the connection from the first computing device to the second computing device using the second network address, such as via a swimmer session traversing a firewall.

[0013] In one embodiment, the first tunneling session or the second tunneling session via the gateway includes a Secure Socket Layer or a virtual private network. In another embodiment, the second computing device is located behind a firewall associated with the second network address. In a further embodiment, the method of the present invention provides the second network address to the first computing device by communicating an out of band signal to the first computing device via the first tunneling session. Additionally, the gateway may communicate a key to the first computing device and to the second computing device.

[0014] In another aspect, the present invention is related to a system for establishing a peer-to-peer communication session between a first computing device on a first network and a second computing device on a second network via a third computing device. The first network may be disconnected from and not routable to the second network. The system includes a first computing device on the first network, and a second computing device on the second network. A third computing device establishes a first tunneling session with the first computing device and a second tunneling session with the second computing device. The system also includes a server accessible via the third computing device. In operation of the system, the server communicates via the third computing device to the first computing device a first network address identifying a network address of the second computing device associated with the second tunneling session. The first computing device communicates via the third computing device a first request to initiate a connection with the second computing device using the first network address. The third computing device intercepts the first request, and provides the first computing device a second network address for the second computing device. The second network address identifies a public network address associated with the second computing device. The third computing device communicates a second request to the second computing device to allow a connection from the first computing device using the second network address.

[0015] In one embodiment of the system, the first tunneling session or the second tunneling session includes a Secure Socket Layer or a virtual private network. Furthermore, the third computing device may be a remote access gateway, such as an SSL VPN gateway. In another embodiment of the system, the second computing device is located behind a firewall associated with the second network address.

[0016] In an additional embodiment of the present invention, the third computing device provides the second network address to the first computing device by communicating an out of band signal via the first tunneling session, such as via an out of band TLS session. In one embodiment, the second computing device provides a forward hole in a firewall for the first computing device to communicate to the second computing device using the second network address.

[0017] In a further embodiment of the system of the present invention, the third computing device communicates a key to the first computing device and the second computing device. The first computing device and the second computing device may exchange keys. Additionally, the first

and second computing device may check that the key received from the other computing device matches before transmitting data.

[0018] In some embodiments of the present invention, the system includes a first telecommunication device associated with the first computing device, and a second telecommunication device associated with the second computing device. The first telecommunication device or the second telecommunication device may include a software component or a hardware component, such as a hard or soft VoIP telephone. In one embodiment, the system of the present invention includes establishing a telecommunication session between the first telecommunication device and the second telecommunication device via the connection between the first and second computing devices. The first telecommunication device and the second telecommunication device may communicate over the telecommunication session without traversing the third computing device.

[0019] In another embodiment of the present invention, the first computing device and the second computing device communicate a remote display protocol via the connection. The remote desktop protocol may include the Independent Computing Architecture protocol or the Remote Desktop Protocol. In yet a further embodiment, the first computing device may share a screen view or screen data with the second computing device via the connection.

[0020] In another aspect, the present invention is related to a method for communicating via a lossless protocol a packet constructed to be transmitted via a lossy protocol. The method may be performed in one or more electronic devices, such as in a system, and by any suitable means and mechanisms. The method includes establishing a connection between a first computing device and a second computing device via a lossless protocol. In some embodiments, the second computing device may be a gateway, such as an SSL VPN gateway. The first computing device detects a lossless protocol packet comprising a payload having one or more packets constructed in accordance with a lossy protocol. The first computing device communicates a false acknowledgement of receipt of the lossless protocol packet to the first computing device and/or the second computing device. The false acknowledgement of receipt of the lossless protocol packet prevents employing the reliability algorithms and mechanisms of the lossless protocol. The first computing device communicates the lossless protocol packet to the second computing device. In some embodiments, the false acknowledgement of receipt of the lossless protocol packet is communicated prior to communicating the lossless protocol packet.

[0021] In one embodiment, the method of the present invention includes encrypting, by the first computing device, the one or more packets using a key. In some embodiments, the encryption key may be provided to the first computing device via an out of band transport security layer session between the first computing device and the second computing device. In a further embodiment, the method encrypts the one or more packets on a packet by packet basis.

[0022] In another embodiment of the method of the present invention, in response to receiving the false acknowledgement of receipt of the lossless protocol packet by the first computing device and/or the second computing, the first computing device and/or the second computing prevents executing an operation associated with providing a lossless characteristic of the lossless protocol. In one embodiment, the lossless protocol is a transport control protocol. In a further embodiment, the method of the present invention prevents the network stack of the first computing device and/or the second computing device from executing one or more of the following in connection with the lossless protocol: 1) a retransmit, 2) an ordering, 3) a flow control algorithm, 4) a naple's algorithm, and 5) a sliding window algorithm.

[0023] In one embodiment, the lossy protocol includes a user datagram protocol. In another embodiment, the method includes communicating, by the first computing device, the lossless protocol packet via a secure socket layer or a transport security layer tunnel to the second computing device.

[0024] In another embodiment, the one or more packets of the payload comprises a real-time protocol. In an additional embodiment, the method includes communicating by the first computing device one of real-time voice, audio, or data to the second computing device via the one or more packets.

[0025] In one aspect, the present invention relates to a method for transmitting packets from an application using an unreliable transport protocol over a TCP connection. The method includes receiving, at a first device, a first packet to be transmitted using an unreliable transport protocol, and creating a first TCP packet including a first payload of the received first packet and a first TCP header of information associated with a TCP connection established between the first device and a second device. The first device transmits the first TCP packet to the second device. The method further includes receiving, at the first device, a second packet to be transmitted using an unreliable transport protocol, and creating a second TCP packet including a second payload of the received second packet and the first TCP header information. Before receipt of an acknowledgement of the receipt of the first payload from the second device, the first device transmits the second TCP packet to the second device.

[0026] In one embodiment, the method of the present invention establishes the TCP connection with a port number associated with the unreliable transport protocol. In another embodiment, the method includes dynamically determining, by the first device, the first TCP packet and second TCP packet comprise an unreliable transport protocol. In some embodiments, the unreliable transport protocol is UDP.

[0027] In an additional embodiment, the method includes receiving the first TCP packet and second TCP packet on the first device by intercepting the first TCP packet and second TCP packet using a packet capturing mechanism. In some embodiments, the method establishes by the first device, the TCP connection with a VPN gateway device. In other embodiments, the method includes establishing peer-to-peer communications between the first device and the second device via the TCP connection. In another embodiment of the present invention, the method includes encrypting, by the first device, the first and second TCP packets, and decrypting, by the second device, the encrypted first and second TCP packets.

[0028] In another aspect, the present invention relates to a method for transmitting packets from an application using

an unreliable transport protocol over a TCP connection. The method includes intercepting, at a second device, a first TCP packet created on a first device and received on the second device. The first TCP packet includes a first payload of a first packet generated by an application using an unreliable protocol and a first TCP header of information associated with a TCP connection established between the first device and the second device. The intercepting of the method occurs before the first TCP packet is provided to a TCP stack on the second device. The method includes identifying, responsive to the TCP header of information, that the first payload is a packet generated by an application using an unreliable transport protocol, stripping the TCP header of information from the first TCP packet, and forwarding the first payload to an application using the unreliable data protocol.

[0029] In one embodiment, the unreliable protocol is UDP. In another embodiment, the step of identifying comprises identifying that the TCP header information includes a port number associated with the unreliable transport protocol. In some embodiments, the method includes intercepting, by the second device, the first TCP packet using a packet capture driver.

[0030] In some embodiments, the first device is a client device and the second device is a VPN gateway. Additionally, the method of the present invention includes performing Network Address Translation (NAT) on the second device prior to forwarding the first payload to the application.

[0031] In a further aspect, the present invention relates to a system for transmitting packets from an application using an unreliable transport protocol over a TCP connection. The system includes a first device and a second device. The first device has an application that generates a first and second packet. The first and second packet are intended to be transmitted using an unreliable transport protocol. The first device also has a filter process and a tunneling process. The filter process intercepts the first and second packets from the application and forwards the intercepted packets to the tunnel process. The tunnel process requests the opening of a TCP connection between the first device and a second device. The request to open the TCP connection indicates to the first and second device that the TCP connection will transport packets intended to be transmitted with an unreliable transport protocol. The tunnel process forwards the first and second packets as payloads in a first and second TCP packet to the second device. The tunnel process sends the second TCP packet after sending the first TCP packet and prior to receiving an acknowledgement for the first TCP packet.

[0032] The second device of the system of the present invention is in communication with the first device. The second device has second filter process and tunneling process. The second tunnel process opens the TCP connection requested by the first device, and identifies and forwards the source address of the TCP connection to the second filter process. The second filter process intercepts packets from the application received at the second device with the TCP connection source address in a header. The second filter process strips the TCP header from the received packets and forwards the stripped packets to an intended destination, and circumventing the TCP/IP stack on the second device.

[0033] In one embodiment of the system of the present invention, the filter process on the first device and/or the second filter process of the second device is a packet capture driver. In some embodiments, the first device is a client device and the second device is a VPN gateway device. In one embodiment, the unreliable data protocol is UDP.

[0034] In another embodiment, the system also includes a third device to which the stripped packets are transmitted. Additionally, the second device may further include a Network Address Translation (NAT) table used to perform network address translation prior to transmitting the stripped packets to the third device.

[0035] In a further aspect, the present invention is related to a method for adjusting the maximum transmission unit of a secure network communication to reduce network fragmentation. The method may be performed in one or more electronic devices, such as in a system, and by any suitable means and mechanisms. The method includes establishing a session between a first computing device and a second computing device. The session may established by an agent of the first computing device. The first computing device has a first network stack. The method detects, by the first computing device, a network packet having an encrypted payload, and determines a setting for a maximum transmission unit parameter of the first network stack to reduce the maximum transmission unit size by at least a size associated with the encrypted portion of the payload. The method alters the maximum transmission unit (MTU) parameter of the first network stack to the determined setting. As such, the reported MTU parameter is reduced to account for the encryption.

[0036] In one embodiment, the method of the present invention includes communicating the network packet via a secure socket layer or a transport layer security tunnel to the second computing device. The second computing device may be a gateway, such as an SSL VPN gateway. In another embodiment, the payload comprises a real-time protocol.

[0037] Additionally, in one embodiment, the method may further comprise altering the maximum transmission unit parameter via a network driver interface specification (NDIS) level mechanism of the first network stack In another embodiment, the method determines the setting of the maximum transmission unit parameter dynamically per session between the first computing device and the second computing device. In one embodiment, the agent of the first computing device communicates via an IOCTL application programming interface to the first network stack to alter the maximum transmission unit parameter to the determined setting.

[0038] In some embodiments, the method of the present invention establishes the session between the first computing device and the second computing device via a gateway. In other embodiments, the method communicates by the first computing device real-time voice, audio, or data to the second computing device via the payload of the network packet. In yet another embodiment, the method may include communicating a false acknowledgement of receipt of the network packet to the first computing device and/or the second computing device before communicating the network packet. In one embodiment, the network packet comprises a lossless protocol packet, such as a transport control protocol. In another embodiment, the payload comprises a lossy protocol packet, such as a user datagram protocol.

[0039] In an additional aspect, the present invention is related to a method for a client to prioritize network communications of the client associated with an application of the client. The method includes intercepting, by the client, one or more network packets associated with one or more applications of the client, and storing the one or more network packets to a queue. The client determines the queued one or more network packets is associated with a first application of the client. The client indicates a priority for the determined one or more network packets to place the determined one or more network packets ahead of at least one network packet in the queue associated with a second application of the client. The client provides the prioritized one or more network packets for communications via a network stack of the client.

[0040] In one embodiment, the method of the present invention includes determining, by the client, the queued one or more networks packets of the first application comprises real-time data. The real-time data may include one of the following: 1) a real-time protocol, 2) a user datagram protocol, and 3) a representation of voice or audio.

[0041] In another embodiment, the method includes preventing, by the client, at least one network packet of the second application from being communicated via the network stack ahead of the one or more network packets of the first application. In a further embodiment, the method includes holding, by the client, in the queue a network packet associated with the second application, and releasing the held network packet upon communication of the one or more network packets associated with the first application prioritized ahead of the held network packet.

[0042] In yet another embodiment of the present invention, the method includes intercepting, by the client, the one or more network packets transparently to the one or more applications on the client. In some embodiments, the first application is running in the foreground, and the second application is running in the background.

[0043] In one embodiment of the present invention, the method includes associating a priority with the first application higher than a priority associated with the second application. In another embodiment, a user may specify the priority of the first application or the second application. In a further embodiment, the client receives the one or more network packets from a computing device. Also, the one or more applications may provide the one or more network packets for communicating from the client to a computing device.

[0044] In another aspect, the present invention is related to a client for prioritizing network communications of the client associated with an application of the client. The client includes a mechanism for intercepting one or more network packets of the client associated with one or more applications of the client. The client also includes a network driver for storing the one or more networks packets to a queue and communicating the one or more network packets via a network stack of the client. The client further includes an agent for determining the one or more network packets is associated with a first application of the client, and indicating to the network driver a priority of the one or more network packets to place the determined one or more network packets ahead of at least one network packet in the queue associated with a second application of the client.

[0045] In one embodiment, the agent of the present invention determines the one or more networks packets of the first application comprises real-time data. The real-time data comprises one of the following: 1) a real-time protocol, 2) a user datagram protocol, and a 3) representation of voice or audio.

[0046] In a further embodiment, the agent or the network driver of the present invention prevents at least one network packet of the second application from being communicated via the network stack ahead of the one or more network packets of the first application. In one embodiment, the network driver holds in the queue a network packet associated with the second application, and releases the held network packet upon communication of the one or more network packets associated with the first application prioritized ahead of the held network packet.

[0047] In another embodiment, the present invention, via the mechanism, intercepts the one or more network packets transparently to the one or more applications on the client. In some embodiments, the first application is running in the foreground, and the second application is running in the background. Also, the first application may have a priority higher than the second application of the client. Furthermore, the client may include a configuration mechanism for a user to specify the priority. In some embodiments, the client receives the one or more network packets from a computing device. In other embodiments, the one or more applications provides the one or more network packets for communicating from the client to a computing device.

[0048] In an additional embodiment, the network driver includes a Network Driver Interface Specification (NDIS) driver. Also, the network driver may operate in kernel-mode of an operating system of the client. In some cases, the agent operates in user-mode of an operating system of the client. Furthermore, the agent or the network driver includes the mechanism for intercepting one or more network packets of the client.

[0049] In yet another aspect, the present invention is related to a method for shielding from a network disruption a session established via a first protocol. The method includes the steps of establishing, via an agent of a client, a session via a first protocol over a network connection between the client and a device. The network connection is associated with a network stack. A first portion of the network stack has one or more layers of the network stack below the layer of the first protocol, and a second portion of the network stack includes a layer for the first protocol and one or more layers of the network stack above the first protocol. The method includes detecting a disruption in the network connection causing the second portion of the network stack to be disestablished, and maintaining, by the agent, the session and the second portion of the network stack during the disruption. The method further includes re-establishing the first portion of the network stack and the network connection while maintaining the session and the second portion of the network stack.

[0050] In one embodiment, the method includes continuing the session with the maintained second portion of the network stack and the re-established first portion of the network stack. In some embodiments, the method also includes dropping, by the first and/or second portion of the network stack, any network packets received during the disruption.

[0051] In another embodiment, the device comprises a remote access gateway or another computing device. In some cases, the method includes establishing the session via the first protocol of one of the following: 1) secure socket layer (SSL) protocol, 2) a transport layer security (TLS) protocol, and 3) a tunneling protocol. Additionally, the method of the present invention may include communicating, by the agent, real-time data via the session between the client and the device. The real-time data may include a real-time protocol or the real-time data may represent voice or audio.

[0052] In some embodiments, the agent operates in user-mode of an operating system of the client. In one embodiment, the first portion of the network comprises one of a transport control protocol or an internet protocol. In another embodiment, the second portion of the network stack comprises one of 1) an internet protocol, 2) a user datagram protocol, or 3) a voice over internet protocol. Additionally, the client may communicate with the device via a remote display protocol. The remote display protocol may be an Independent Computing Architecture (ICA) protocol or a Remote Desktop Protocol (RDP).

[0053] In another embodiment, the method of the present invention is performed transparently to an application of the client communicating via the network connection. In one embodiment, the method includes intercepting, by the agent, transparently to an application of the client one or more network packets associated with the application. In one embodiment, the method includes intercepting, by a network driver associated with the first portion of the stack, transparently to the application on the client one or more network packets associated with the application.

[0054] In an additional aspect, the present invention is related to a system for shielding from a network disruption a session established via a first protocol. The system has an agent of a client establishing a session between the client and a device over a network connection via a first protocol. The system includes a network stack having a first portion and a second portion, such as the network stack of the client. The second portion of the network stack comprises a layer for the first protocol and one or more layers of the network stack above the first protocol, and a first portion of the network stack comprises one or more layers of the network stack below the layer of the first protocol. The system includes a detector for detecting a disruption in the network connection causing the first portion of the network stack to be disestablished. In operation of the system and upon detection of the disruption by the detector, the agent maintains the session and the second portion of the network stack during the disruption. The client re-establishes the first portion of the network stack and the network connection while the agent maintains the session and the second portion of the network stack.

[0055] In one embodiment of the system of the present invention, the agent continues the session with the maintained second portion of the network stack and the re-established first portion of the network stack. In some embodiments, the first and/or second portion of the network stack drops any network packets received during the disruption.

[0056] In one embodiment, the device of the system is a remote access gateway or another computing device The first protocol used by the system of the present invention may include one of the following: 1) secure socket layer (SSL) protocol, 2) a transport layer security (TLS) protocol, and 3) a tunneling protocol. In another embodiment, the agent of the present invention communicates real-time data via the session between the client and the device. The real-time data may include a real-time protocol, or a representation of voice or audio.

[0057] In some embodiments of the system, the agent operates in user-mode of an operating system of the client. In one system embodiment, the first portion of the network comprises a transport control protocol and/or or an internet protocol. In another embodiment, the second portion of the network stack includes one of 1) an internet protocol, 2) a user datagram protocol, or 3) a voice over internet protocol. Additionally, the client may communicate with the device via a remote display protocol, which may be an Independent Computing Architecture (ICA) protocol or a Remote Desktop Protocol (RDP).

[0058] In another embodiment, the system of the present invention maintains the second portion of the network stack and re-establishes the first portion of the network stack transparently to an application of the client communicating via the network connection. In one embodiment, the agent intercepts network packets transparently to an application of the client one or more network packets associated with the application. In one embodiment, the system also includes intercepting, by a network driver associated with the second portion of the stack, transparently to the application on the client one or more network packets associated with the application.

[0059] The details of various embodiments of the invention are set forth in the accompanying drawings and the description below.

BRIEF DESCRIPTION OF THE DRAWINGS

[0060] The foregoing and other objects, aspects, features, and advantages of the invention will become more apparent and may be better understood by referring to the following description taken in conjunction with the accompanying drawings, in which:

[0061] **FIG. 1A** is a block diagram depicting an embodiment for practicing the operations of the present invention via a gateway in a network environment;

[0062] **FIG. 1B** is a block diagram depicting another embodiment for practicing the operations of the present invention in a peer-to-peer network environment;

[0063] **FIG. 1C** is a block diagram depicting an embodiment of a remote access client of the present invention for network communications;

[0064] **FIGS. 1D and 1E** are block diagrams depicting embodiments of a computing device useful in practicing an embodiment of the present invention;

[0065] **FIG. 2A** is a block diagram depicting an embodiment of a peer-to-peer network environment for practicing an embodiment of the technique of the present invention for establishing a peer-to-peer communication route;

[0066] **FIG. 2B** is a flow diagram depicting an embodiment of the steps performed to optimize peer-to-peer route optimization technique of the present invention;

[0067] **FIG. 3A** is a block diagram depicting an embodiment of network stacks of any of the computing devices of illustrative environments depicted in **FIGS. 1A-1C**;

[0068] **FIG. 3B** is a flow diagram depicting an embodiment of the steps performed to use a false acknowledgement of receipt of network packets to communicate via a lossless protocol packets constructed for transmission via a lossy protocol;

[0069] **FIG. 3C** is a flow diagram depicting an embodiment of the steps performed to communicate via a lossless protocol packets constructed for transmission via a lossy protocol;

[0070] **FIG. 4** is a flow diagram depicting one embodiment of steps performed for adjusting the maximum transmission unit parameter;

[0071] **FIG. 5A** is a block diagram depicting an environment of a client for providing client-side application-aware prioritization techniques;

[0072] **FIG. 5B** is a flow diagram depicting one embodiment of the steps performed to provide client-side application-aware prioritization;

[0073] **FIG. 6A** is a block diagram depicting an environment of an apparatus for shielding a network disruption from a device; and

[0074] **FIG. 6B** is a flow diagram depicting one embodiment of the steps performed in to shield network disruption from a device.

DESCRIPTION

[0075] Certain illustrative embodiments of the present invention are described below. It is, however, expressly noted that the present invention is not limited to these embodiments, but rather the intention is that additions and modifications to what is expressly described herein also are included within the scope of the invention. Moreover, it is to be understood that the features of the various embodiments described herein are not mutually exclusive and can exist in various combinations and permutations, even if such combinations or permutations are not expressly made herein, without departing from the spirit and scope of the invention.

[0076] The illustrative embodiments of the present invention are generally directed towards a remote access architecture for providing peer-to-peer communications and remote access connectivity. In one illustrative embodiment, the remote access architecture of the present provides a method for establishing a direct connection between peer computing devices via a third computing device, such as a gateway. The present invention also provides various techniques for optimizing the peer-to-peer communications established with or without the gateway. The peer-to-peer communications may include real-time communications such as voice over internet protocol (VoIP) signaling and media, video, and other real-time data applications such as web collaboration, screen or desktop sharing, and instant messaging. In addition to establishing a peer-to-peer connection via gateway, the present invention also provides the following techniques to optimize peer-to-peer communications: 1) false acknowledgement of receipt of network packets allowing communications via a lossless protocol packets constructed for transmission via a lossy protocol, 2) payload shifting of network packets allowing communications via a lossless protocol of packets constructed for transmission via a lossy protocol, 3) reduction of packet fragmentation by adjusting the maximum transmission unit (MTU) parameter, accounting for overhead due to encryption, 4) application-aware prioritization of client-side network communications, and 5) network disruption shielding for reliable and persistent network connectivity and access, such as for mobile clients. These techniques may be practiced in peer-to-peer communications between two clients in some embodiments, or in other embodiments, in communications between a client and a gateway or between one computing device via a gateway to another computing device, such as via an SSL VPN gateway of an illustrative embodiment of the present invention.

[0077] In the illustrative embodiments of the present invention, the peer-to-peer route optimization technique determines a more optimal route to a resource a client may be trying to access via a gateway. The client and the resource accessed by the client, such as a server or a peer computer, may have a more direct route than via the gateway. For example, the client and the server may be located near each other but distant from the gateway, and thus, are closer to each other than via the gateway. Furthermore, using a gateway causes at least one additional hop in the end-to-end network communications between the client and the server. Instead of the client and server communicating via the gateway using their virtual private network (VPN) assigned internet protocol (IP) network addresses, the gateway and remote access architecture of the present invention facilitates the client and server communicating to each other via a direct route in a peer-to-peer fashion without using the gateway. In some cases, however, the client and server may not have a direct path between each other as either the client and/or server may be behind a firewall, such as a Network Address Translation (NAT) firewall. The peer-to-peer route optimization techniques and remote access architecture of the present invention also provide techniques for the client and server to communicate directly via traversal of the firewall. As such, the peer-to-peer route optimization techniques of the present invention provides a shorter more optimal route between peer computers than via the gateway.

[0078] In the illustrative embodiments of the present invention, the false acknowledgement technique of an embodiment of the present invention enables a packet constructed to be transmitted via a lossy protocol to be communicated via lossless protocol. For example, a real time protocol (RTP) may be implemented over a user datagram protocol (UDP) for voice over IP (VoIP) communications. A lossy or unreliable protocol, such as UDP, may be used for voice communications because, in some real-time voice applications, it may be more important to get network packets to a recipient on time rather than getting the network packets in order or guaranteeing the delivery of network packets. However, by way of virtual private network and remote access solutions using a secure communication and/or tunneling protocol, such as Secure Socket Layer (SSL) or Transport Layer Security (TLS), a real-time application data constructed to be transmitted via a lossy protocol, such as UDP, may be communicated via a lossless or reliable protocol such as a transport control protocol (TCP). The techniques of the present invention allow a lossy protocol, such as RTP over UDP, to be communicated via a lossless protocol such as TCP, while avoiding one or more of the

lossless characteristics of the lossless protocol from being applied to the communication. In the illustrative embodiment of the present invention, this technique communicates a false acknowledgement of receipt of the lossless protocol network packet to the corresponding network stacks to prevent the lossless protocol from executing algorithms that provide for reliability of the protocol. Using this technique, the lossy protocol can be communicated over a lossless protocol, such as via TCP, SSL or via a tunneling protocol of a gateway, for example, to make the communication secure, and have the lossy protocol network packets get to the recipient on time rather than getting to the recipient reliably. In one embodiment, this technique can be used to securely communicate real-time data communications such as VoIP over SSL or TLS between peers or via a gateway.

[0079] The illustrative embodiments of the present invention also provide another technique of payload shifting that enables a packet constructed to be transmitted via a lossy protocol to be communicated via lossless protocol. A first computing device receives a first packet to be transmitted using an unreliable transport protocol, and creates a first TCP packet including a first payload of the received first packet. The first TCP packet is created with a TCP header having information associated with a TCP connection established between the first and a second computing device. The first TCP packet is transmitted to the second computing device. A second packet to be transmitted using an unreliable transport protocol is received by the first computing, which in turn creates a second TCP packet including the payload of the received second packet but with the TCP header information of the first TCP packet. The second TCP packet is transmitted to the second computing device before receiving an acknowledgement of the receipt of the first TCP packet from the second device. As such, the payload shifting technique communicates multiple unreliable transport protocol payloads under a TCP header until an acknowledgement of receipt is received.

[0080] In the illustrative embodiments of the present invention, the maximum transmission unit adjustment technique reduces the reported size of the maximum transmission unit (MTU) parameter of a network stack of a client to take into consideration the effect of the network packet size due to encryption of a payload. Encryption of the payload of a network packet increases the size of the network packet communicated to or by the client, and may cause a network packet to be fragmented. For example, a server may communicate to the client a network packet via an SSL gateway to the client. Although the server sends a network packet that should meet the MTU size the network stack of the client can handle, the encryption provided by the gateway increases the size of the network packet before it reaches the client. This may cause the network packet communicated from the server to the client via the gateway to be fragmented as the increased packet size from encryption may be too large for the MTU size of the client. The technique of the present invention adjusts the client's reported MTU size to report a smaller size to take in account for the overhead of the encryption. This technique reduces network fragmentation or otherwise prevents non-optimal fragmentation.

[0081] In the illustrative embodiments of the present invention, the prioritization technique provides for client-side and application-aware prioritization of network communications. That is, the remote access client of the present invention manages and controls network communication prioritizations on the client. The prioritizations are based on priorities of the application on the client. The remote access client transparently intercepts network communications associated with applications executing on the client, detects the network communication is associated with an application, and determines priorities for the network communications based on a priority for the application. For example, an application on the client may be communicating real-time data communications, such as VoIP, to a peer client or via a gateway. The remote access client may intercept a network packet, and detect, for example, the network packet contains real-time data or is from a VoIP application. The remote access client may indicate a priority for this network packet such that the network packet may be communicated ahead of non-real-time data communications or ahead of network communications from other applications. As such, the prioritization techniques of the present invention may improve or increase the performance, operational characteristics, and user experience on the client based on the applications running on the client.

[0082] In the illustrative embodiments of the present invention, the network disruption shielding technique provides a persistent and reliable connection of a client to a network, such as a peer-to-peer communication session or a connection to a gateway. For example, a mobile client, such as a laptop with a software based IP telephone, may connect to a network for VoIP communications. A temporary disruption in a network connection may occur when the mobile client roams between different access points in the same network, or when the client switches between networks (e.g., from a wired network to a wireless network). This disrupts the network service to the client and may drop the VoIP telephone call. Additionally, as the mobile client moves between access points, the mobile client may obtain a different IP network address, such as from a new Dynamic Host Configuration Protocol (DHCP) lease. This can also cause network connectivity and VoIP telephone communication disruption. The techniques of the present invention detects a disruption in the network and shields a portion of the network stack from the network disruption. The shielded portion of the network stack is maintained while the other portion of the network stack is reestablished and reconnected to the network. Once the network is available, the present invention continues with the client's network communications. In some embodiments, the network communications are queued during the network disruption and transmitted once the network is available. In other embodiments, such as for real-time data communications, network packets are dropped during the disruption to prevent the queuing of network packets that may cause latency in the real-time communication, such as VoIP telephone call.

[0083] Although the illustrative embodiments of the present invention may be generally described in connection with an internet protocol (IP) based protocol, such as a transport control protocol (TCP) or user datagram protocol (UDP), the techniques of the present invention may be used in any other types of networking environments with other networking protocols, such as any Internetwork Packet Exchange (IPX) protocol based networks using a Sequenced Packet Exchange (SPX) protocol. Also, although a lossy or unreliable protocol such as UDP and a lossless or reliable protocol such as TCP may be used for illustrating an embodiment of the present invention, any lossless/reliable

and lossy/unreliable protocol as known to those ordinarily skilled in the art may be used in practicing the operations of the present invention described herein. Furthermore, although some of the illustrative embodiments of the present invention may be described below in relation to real-time data communications, such as VoIP, the techniques of the present invention may be applied for non-real-time data communications as one ordinarily skilled in the art will also recognize and appreciate.

[**0084**] Additionally, at times, the illustrative embodiments of the present invention may be described in regards to peer-to-peer communications. In one aspect, a peer-to-peer model comprises a type of network in which any computer can act as both a server by providing access to its resources to other computers, and can act as a client by accessing shared resources from other computers. Although in another aspect, a peer-to-peer model may not comprise a notion of a client and a server, a client and a server may provide peer-to-peer communications as well as client to client, server to server, or a client/server to a computing device such as a gateway. In an additional aspect, peer-to-peer communications comprises a process whereby computers can exchange information between each other directly without the assistance of a third party network or a device, such as a gateway. Although peer-to-peer communications may be generally described as direct communication between computers, there may be other network elements between the computing devices to facilitate the transmission and/or communication, such as for example, a network hub.

[**0085**] Furthermore, although the illustrative embodiments of the present invention may be described peer-to-peer, point-to-point, client to server, or otherwise, one ordinarily skilled in the art will recognize and appreciate that the present invention may be practiced between computing devices in any manner via any network topology, and that any reference to peer-to-peer, client/server, or otherwise is not intended to limit the present invention in any way.

[**0086**] In one aspect, the present invention is related to a remote access architecture having a remote access client for communicating to a network via a gateway or peer-to-peer to another remote access client or another computing device. The remote access architecture of the present invention provides systems and methods for securely communicating network traffic transmitted between a private network behind a gateway to a client on an external network, such as public network. The remote access architecture of the present invention enables separation of the client from the private network by providing network address translation (NAT) functionality on the gateway. A VPN gateway that uses Network Address Translation (NAT(provides masquerading of IP addresses of a client to shield the private network from direct layer-2 access by the client.

[**0087**] Referring now to **FIG. 1A**, the environment **180** depicts a system for deploying the remote access architecture in an illustrative embodiment of the present invention. In brief overview, the environment **180** includes multiple computing devices **102***a*-**102***c* (herein also referred to as clients **105***a*-**105***c*) connected to a network **104** via one or more network connections **341***a*-**341***n*. One or more of the clients **105***a*-**105***n* may connect to a server **102***a*, a server farm **102***e*, or a peer computing devices **102***d* via a gateway **350**.

[**0088**] Each client **105***a*-**105***n* includes a remote access client **120***a*-**120***c*, which will be described in more details in connection with **FIG. 1C**, and one or more applications **338***a*-**338***n*. Each of the clients **105***a*-**105***n* communicate over the network **104** to the gateway **340** via a tunneling or gateway connections **341***a*-**341***n* using any type and/or form of suitable tunneling or gateway protocols. In some embodiments, the gateway connections **341***a*-**341***n* may be used for communicating securely, such as via encapsulating and encryption, or otherwise may use any other protocols, such as any real-time, lossless, or lossy protocol. In other embodiments, the gateway **340** provides a virtual private network connection between one or more of the clients **105***a*-**105***n* and any of the computing devices **102***d*-**102***n*.

[**0089**] The client **105** can be any type and/or form of computing device **102** that can run one or more applications **338** that access a network, such as network **104**. The application **338** can be any type and/or form of application such as any type and/or form of web browser, web-based client, client-server application, a thin-client computing client, an ActiveX control, or a Java applet, or any other type and/or form of executable instructions capable of executing on client **105** or communicating via a network **104**. The application **338** can use any type of protocol and it can be, for example, an HTTP client, an FTP client, an Oscar client, or a Telnet client. In some embodiments, the application **338** uses a remote display or presentation level protocol. In one embodiment, the application **338** is an ICA client, developed by Citrix Systems, Inc. of Fort Lauderdale, Fla. In other embodiments, the application **338** includes a Remote Desktop (RDP) client, developed by Microsoft Corporation of Redmond, Wash. In other embodiments, the application **338** comprises any type of software related to VoIP communications, such as a soft IP telephone. In further embodiments, the application **338** comprises any application related to real-time data communications, such as applications for streaming video and/or audio.

[**0090**] The clients **105***a*-**105***n* may access any of the resources provided via computing devices **102***d*-**102***n* which may be on the same network **104**, or which may be on a separate network, such as a private network. In some embodiments, computing devices **102***a*-**102***n* may be on a network disconnected and not routable from the network **104** of the clients **105***a*-**105***n*. In one embodiment, any of the clients **105***a*-**105***n* may communicate with a peer computing device **102***d* having a remote access client **102***n* and application **338***d*. For example, the application **338***d* may comprise a portion of a client/server or distributed application corresponding to any of the applications **338***a*-**338***c* on clients **105***a*-**105***n*. In some embodiments, any of the remote access clients **120***a*-**120***n* may communicate with the remote access client **120***n* via the gateway **340**.

[**0091**] In another embodiment, any of the clients **105***a* may communicate via the gateway **340** to a server **102***e* running an application **338***e*, which for example, may be an application server providing email services such as Microsoft Exchange manufactured by the Microsoft Corporation of Redmond, Wash., a web or Internet server, or a desktop sharing server, or a collaboration server. In some embodiments, any of the application **338***e* may comprise any type of hosted service, such as GoToMeeting.com provided by Citrix Systems, Inc. of Ft. Lauderdale, Fla., WebEx.com

provided by WebEx, Inc. of Santa Clara, Calif., or LiveMeeting.com provided by Microsoft Corporation of Redmond, Wash.

[0092] In another embodiment, any of the clients **105***a* may communicate via the gateway **340** to a server farm **102***n* or server network, which is a logical group of one or more servers that are administered as a single entity. The server farm **102***n* may be running one or more applications **338**N, such as an application **338***f* providing a thin-client computing or remote display presentation application. In one embodiment, the server **102***e* or server farm **102***n* executes as an application **338***e*-**338***n*, any portion of the Citrix Access Suite™ by Citrix Systems, Inc., such as the MetaFrame or Citrix Presentation Server™, and/or any of the Microsoft Windows Terminal Services manufactured by the Microsoft Corporation.

[0093] Still referring to **FIG. 1A**, the gateway **340** may comprise any type and/or form of gateway, such as a remote access server, that may be used to connect one or more computing devices on one network to other networks. In another aspect, the gateway **340** may be used to provide a virtual private network connection to give a client **105***a*-**105***c* access to a private network. In a further aspect, the gateway **340** may be a hardware or software set-up that translates between two dissimilar protocols or disjoint or disconnected networks or systems. The gateway **340** may comprise a specialized hardware or networking device, or may be a computing device configured to act as a gateway. As such, the gateway **340** may comprise software, hardware, or any combination of software and hardware. In one embodiment, the client **105** and the gateway **340** communicate via any type and/or form of gateway or tunneling protocol **341***a*-**341***n*, such as SSL or TLS, or the Citrix Gateway Protocol manufactured by Citrix Systems, Inc. of Ft. Lauderdale, Fla.

[0094] In some embodiments, the gateway **340** may decrypt encrypted packets received from a client **105***a*-**105***c*, and may encrypt packets communicated to a client **105***a*-**105***n*. The gateway **340** may be used to protect a private network, such as network **104**. In some embodiments, the gateway **340** associates a client **105***a*-**105***c* with a private IP address or an IP address of the private network. In one of these embodiments, when the gateway **340** receives a packet from the client **105***a*-**105***c*, the gateway **340** transforms the IP address of the packet to the IP address associated with the client **105***a*-**105***c* for the private network. In some embodiments, the gateway **340** may apply access control policies to network traffic to and/or from a client **105***a*-**105***c*. For example, access controls policies may be applied to a packet received from the client prior to routing the packet to a final destination.

[0095] In one embodiment of the gateway **340**, once a frame enters the gateway **340** via an SSL tunnel, the packet and its payload are dispatched via callbacks into a handlers executing in user mode, which provide functionality for SSL decryption. In another embodiment, openSSL may be used. In other embodiments, a hardware accelerator is used. In a further embodiment, the gateway **340** comprises one or more blades for providing remote access. Once the packet is decrypted, it is injected into an HTTP network stack where headers are assembled and passed on to the remote access blade. In a remote access blade, a packet is classified by the type of data contained within the packet. In one embodiment, the packet contains an HTTP header requesting login and registration. In another embodiment, the packet seeks TCP/UDP/RAW/OTHER connection establishment. In still another embodiment, the packet contains connection-specific data. In yet another embodiment, the packet contains a special feature request such as collaboration with other users, fetching of user directory and presence or requesting telephony functionality such as conferencing and web cast. The remote access module dispatches the packet appropriately to the corresponding sub handler. For example, the client **105** may request that a connection be set up to a specific machine on the private network behind the gateway **340**. The remote access module may consult with the access control module and if a positive response is returned, the remote access module may grant the request. In some embodiments, the remote access module **120** may grant the request by injecting subsequent frames on the private network using a frame forwarding module utilizing NAT/PAT to correlate incoming frames to corresponding SSL tunnels **341***a*-**341***n* to a client **105***a*-**105***c*.

[0096] The network **104** as illustrated in **FIG. 1A** can be any type of network. The network **104** can be a local-area network (LAN), such as a company Intranet, a metropolitan area network (MAN), or a wide area network (WAN), such as the Internet or the World Wide Web. The topology of the network **104** may be a bus, star, or ring network topology. The network **104** and network topology may be of any such network or network topology capable of supporting the operations of the present invention described herein. The client **108** and gateway **340** can connect to one or more networks **104** through a variety of connections including standard telephone lines, LAN or WAN links (e.g., T1, T3, 56 kb, X.25, SNA, DECNET), broadband connections (ISDN, Frame Relay, ATM, Gigabit Ethernet, Ethernet-over-SONET), and wireless connections or any combination thereof. Connections can be established using a variety of communication protocols (e.g., TCP/IP, IPX, SPX, NetBIOS, Ethernet, ARCNET, Fiber Distributed Data Interface (FDDI), RS232, IEEE 802.11, IEEE 802.11a, IEEE 802.11b, IEEE 802.11g, and direct asynchronous connections).

[0097] In one embodiment of the present invention, the gateway **340** illustrated in **FIG. 1A** is used to facilitate a direct peer-to-peer connection between computing devices **102***a*-**102***n*. For example, client **105***a* may establish a tunneling session with the gateway **340** to access the peer computing device **102***d*. The gateway **340** negotiates with the remote access client **120***a* of client **105***a* and the remote access client **120***n* of computing device **102***d* to enable the client **105***a* to directly connect to the computing device **102***d* without traversing the gateway **340**. Once the network connection between the client **105***a* and computing device **102***d* is established, the client **105***a* can communicate in a peer-to-peer manner with computing device **102***d*. The gateway **340** of the present invention can facilitate a direct peer-to-peer connection between any of the computing devices **102***a*-**102***n* illustrated in the environment **180**. In one embodiment, the gateway **340** can facilitate a peer-to-peer connection between any of the clients **105***a*-**105***n*, for example between client **105***a* and client **105***b* or between client **105***b* and client **105***c*. In another embodiment, the gateway **340** facilitates a peer-to-peer connection between computing devices **102***d*-**120***n*, for example, between computing device **102***d* and server **102***e* or server farm **102***n*. In

other embodiments, the gateway **340** facilitates a peer-to-peer connection between one of the clients **105***a*-**105***n* and one of the computing devices **102***d*-**102***n*. The techniques of facilitating a peer-to-peer connection via the gateway **340** will be discussed in more detail below in conjunction with **FIGS. 2A and 2B**

[**0098**] Referring now to **FIG. 1B**, the remote access client **120** of the present invention may be used in an illustrative embodiment of a peer-to-peer connection without a gateway **304**. For example, the gateway **340** may facilitate a peer-to-peer connection between any of the computing device **102***a*-**102***n* illustrated in **FIG. 1**, and thereafter the computing devices **102***a*-**102***n* communicate directly to each other in a peer-to-peer manner. In other embodiments, any computing device **102***a* may communicate directly to another computing device **102***b* or **102***c* via a network **104** without a gateway **340** facilitating the connection.

[**0099**] In brief overview of **FIG. 1B**, the remote access client **120***a* may be deployed on a client **102***a* running one or more application **338***a*. The computing device **102***a* may connect over the network **104** to computing device **102***b* and/or computing device **102***c*. Computing device **102***b* may be a peer or client computing device also comprising a remote access client **120***b*. In some embodiments, remote access client **120***a* and **120***b* may communicate with each other via network **104**, and may work in conjunction with each other for application **338***a* to communicate to application **338***b*, such as for a web-based or client/server application. In other embodiments, the remote access client **120***a* may communicate with computing device **120***c* which may be a server that does not execute a remote access client **120**.

[**0100**] **FIG. 1C** depicts a block diagram illustrating a system having a remote access client **120** for routing network packets from a client **105** to a network **104**. In brief overview, the system includes a computing device **102** (herein also referred to as a client **105**) having an operating system that includes a user mode **332**, also referred to as an application or user space, and a kernel-mode **334**, which may be also referred to as the kernel or system level space. The client **105** runs an agent **326** that in one embodiment, may run in user-mode **332**. The client **105** also runs a filter **322**, which may, in one embodiment, execute in kernel-mode or the kernel space **334**. In one embodiment, the filter **322** and the agent **326** form the remote access client **120** for routing packets via a network, or for otherwise providing remote access connectivity in accordance with the operations of the present invention described herein. The remote access client **120**, or any portion thereof, such as the agent **326** or the filter **322**, may execute in user-mode **332** or kernel-mode **334**.

[**0101**] The client **105** may also have a network stack **310**, which may comprise one or more network layers, such as any networks layers of the Open Systems Interconnection (OSI) communications model as those skilled in the art will recognize and appreciate. The network stack **310** may comprise one or more protocols, such as the TCP/IP protocol over Ethernet or a wireless protocol, such as IEEE 802.11, as those skilled in the art will recognize and appreciate. Furthermore, the network stack **310** may include one or more network drivers supporting the one or more layers, such as a TCP driver or a network layer driver. The network drivers may be included as part of the operating system of the computing device **102** or as part of any network interface cards or other network access components of the computing device **102**. Additionally, any of the network drivers of the network stack **310** may be customized, modified or adapted to provide a custom or modified portion of the network stack **310** in support of any of the techniques of the present invention described herein. Additionally, some portions of the network stack **310** may operate in kernel-mode **334** while other portions run in user-mode **332**, such as an application layer of the network stack **310**.

[**0102**] The filter **322** may include a packet capturing mechanism **365**, and the filter **322** and/or packet capturing mechanism **365** may comprise a network driver, such as a network driver operating at any layer, or portion thereof, of a network stack **310** of the client **105**. The filter **322** and/or the packet capture mechanism **365** may comprise a driver complying with the Network Driver Interface Specification (NDIS), or a NDIS driver. In another embodiment, the filter **322** and/or the packet capture mechanism **365** may comprise a min-filter or a mini-port driver. The packet capture mechanism **365** may also in some embodiments operate in kernel mode **334**. Although the packet capture mechanism **365** is illustrated as part of the filter **322**, the packet capture mechanism **365** may be separate from the filter **322**. Additionally, the filter **322** and the packet capture mechanism **365** may operate at different layers, or portions thereof, of a network stack of the client **105**.

[**0103**] The filter **322** may use a filter table for filtering packets. The filtering table is used to determine what action to take against packets, such as packets intercepted by the packet capture mechanism **365**. The filter **322** can inspect the contents of the packets, such as routing information, to determine the action to take based on the filtering table. In some embodiments, the filter **322** may drop or accept the network packets depending on their content. In other embodiments, the filter **322** may route the network packets to the agent **326** based on the packets content and/or the filtering table. The filter table may also be used to ensure that unwanted packets are discarded. The filter **322** may be used to deny access to particular protocols or to prevent unauthorized access from remote computers by discarding packets to specified destination addresses.

[**0104**] In some embodiments, the filtering table includes information about a private network. In other embodiments, a filter **322** on a client computing device **102** receives the filtering table. In one of these embodiments, the filter **322** receives the filtering table from an application **338** or an agent **326** on the computing device **102**. In another of these embodiments, the filter **322** receives configuration settings from the agent **326** and stores the configuration settings in a filtering table.

[**0105**] The packet capture mechanism **365** may intercept any of the network traffic of the client **105**, such as network packets associated with the application **338**. In some embodiments, the packet capture mechanism **365** intercepts network traffic transparently to the application **338**, the agent **326**, the gateway **340**, or to any portion of the network stack **310** of the client **105**, such as any other driver or layer operating at a layer above or below the layer the packet capture mechanism **365** operates. In this manner, the present invention can be used with and support any of the techniques described herein and for any application and any protocol

used by the application. In one embodiment, the packet capture mechanism **365** intercepts outbound packet traffic, such as any network traffic communicated via network **104** and/or gateway **340**. The packet capture mechanism **365** may forward the packets to the agent **325** or a frame monitor mechanism **360** of the agent **326**. In some embodiments, the filter **322** communicates with the agent **326** via asynchronous I/O control messages. In one of these embodiments, the packet capture mechanism **365** may forward packets addressed to a private network behind a gateway **340** via asynchronous I/O control messages. In other embodiments, the filter **322** communicates with the agent **326** running in the user space **334** via UDP packets. In one embodiment, the filter **322** receives configuration settings from the agent **326** driver via asynchronous I/O control messages. The configuration settings may include information regarding which networks, protocols, or types of packets to filter. In one embodiment, the filter **322** stores the configuration settings in a filtering table. In another embodiment, the filter **322** receives a filtering table including the configuration settings.

[**0106**] In one embodiment, the filter **322** intercepts all outbound packets of the client **105** for inspection. For example, in some embodiments, the filter intercepts a packet generated by an application **338** executing in user-mode **332** for transmission by the client **105**. If the packet satisfies a condition listed in the filtering table, the filter **322** may transmit the packet to the agent **326** and not to the original destination of the packet. The filter **322** may use an asynchronous I/O control message to forward the packet to the agent **326**. The filter **322** may transmit the packet to the agent **326** in accordance with or responsive to a routing table.

[**0107**] In some embodiments, the agent **326** and the filter **322** communicate via an IOCTL application programming interface (API), such as any IOCTL libraries and function calls provided by the Microsoft Windows family of operating systems. In other embodiments, the IOCTL based interface between the agent **326** and the filter **322** may be provided by any portion of the operating system running on the client **105**. Although discussed in terms of I/O control message and the IOCTL interface, the agent **326** and the filter **322** may communicate via any suitable mechanism and/or means.

[**0108**] The kernel **334** of client **105** may include an NDIS interface. In some embodiments, the NDIS interface includes a plurality of intermediate filters. In one embodiment, a packet passes through the NDIS interface and may be inspected by the plurality of intermediate filters. Although the filter **322** may be provided as an NDIS driver, the filter **322** may also be a process or other set or type of executable instructions executing in the kernel **334**.

[**0109**] The agent **326** of the present invention may execute in the application space **332** or user-mode on the client **105**. In other embodiments, the agent **326** operates in kernel-mode **334**. In some embodiments, the agent **326** provides functionality for receiving packets from the filter **322**. In other embodiments, the agent **326** provides functionality for applying a policy to a received packet. In still other embodiments, the agent **326** provides functionality for managing an SSL tunnel to the gateway **340**. In yet other embodiments, the agent **326** provides functionality for encrypting and transmitting a packet to the gateway **340**. The agent **326** may include frame monitor mechanism **360**. The frame monitor **360** may include policies and logic for applying a policy to a received packet. The agent **326** may transmit a packet to a gateway **340** responsive to a policy-based determination made by the frame monitor **360**.

[**0110**] In some embodiments, the frame monitor **360** may apply a policy to determine a condition of the client **105**, or endpoint, at the time of transmission of the packet. In other embodiments, the frame monitor **360** may identify an application **338** that generated the packet. In some of these embodiments, the frame monitor **360** may make a policy-based determination to transmit the packet to the gateway **340** responsive to the identified application **338**. In another embodiment, the frame monitor **360** may perform a checksum on the packet to verify that the identified application actually generated the packet.

[**0111**] In other embodiments, the packet capture mechanism **365** may be included in the agent **326** instead of or in addition to the filter **322**. As such, the agent **326** may intercept network traffic. The packet capture mechanism **365** may use any hooking application programming interface (API) to intercept, hook, or otherwise obtain inbound and/or outbound packets of the client **105**, such as the network traffic associated with application **338**.

[**0112**] In one embodiment, a TCP connection is initiated by an application **338** executing on the client **105** for transmission of IP packets to a target computing device, such as computing device **102***c* of **FIG. 1B** or the gateway **340** in **FIG. 1A**. The remote access client **120** may intercept or capture the IP packets generated by the application **338**. The remote access client **120** may send a TCP acknowledgement packet to the application **338** and terminate the TCP connection initiated by the application **338**. Then, the remote access client **120** creates a second TCP connection to the second computing device **102***c* or the gateway **340** and transmits the captured IP packets via the second TCP connection. In some embodiments, the remote access client **120** may store a captured IP packet in a buffer. In these embodiments, the remote access client **120** may transmit the buffered IP packets via the second TCP connection to the second computing device **102***c*. Storing the captured IP packets in a buffer enables preservation of the packets in the event of a disruption in the network connection.

[**0113**] In one embodiment, upon receipt of the captured IP packets, the gateway **340** may create a third TCP connection between the gateway **340** and the targeted computing device **102***d*, such as in **FIG. 1A**. The gateway **340** may maintain a port-mapped Network Address Translation (NAT) table, enabling the gateway **340** to transmit response packets from the target computing device **102***d* to the port monitored by the application **338** that originally generated the IP packet on the client **105**. Because the client **105** communicates only with a public network address of the gateway **3400**, the client **105** is unaware of the network address of the target computing device **102***d*, increasing security to the network on which the target computing device **102***d* resides. Similarly, since the gateway **340** originates the TCP connection to the target computing device **102***d*, the target computing device **102***d* does not receive the address information of the client **105**, protecting the client **105** and the network on which it resides. Additionally, since the gateway **340** receives the IP packets, the gateway **340** may make a

determination responsive to a policy or security check as to whether or not to transmit the IP packets to the target computing device **102***d*, further increasing protection to the network on which the target computing device **102***d* resides.

[**0114**] In one embodiment, the present invention provides a method for securing a packet transmitted from a private, secured network behind a gateway **340** to a client **105** on an external network **104**. The invention enables separation of the client **105** from the private network by providing network address translation (NAT) functionality on the gateway **340**. A VPN gateway that uses NAT provides masquerading of IP addresses of a client **105** to shield the private network from direct layer-2 access by the client **105**.

[**0115**] In one aspect, any portion of the remote access client **120**, such as the agent **326**, frame monitor **360**, the filter **322**, and packet capture mechanism **365**, or any portion thereof may comprise software, hardware, such as an ASIC or an FPGA, or any combination of software and/or hardware. In some embodiments, portions of the remote access client **120** may be provided via one or more blades on the client **105**.

[**0116**] Although the remote access client **120** is illustrated with multiple components, such as an agent **326** and a filter **322**, one ordinarily skilled in the art will recognize and appreciate that the operations and functionality of the remote access client **120** described herein may be practiced in a single mechanism or single component. For example, in some embodiments, the operations and functionality of the remote access client **120** may be included within an application **338**. In one embodiment for example, the functionality and operations of the remote access client **120** may be provided just as an agent **326**, and in another embodiment, just as a network driver, such as the filter **322**.

[**0117**] In some embodiments, the remote access client **120**, or any portion thereof, such as the agent **326**, frame monitor **360**, the filter **322**, and packet capture mechanism **365** may comprise an application, module, service, computer program, software component, web service, web component, library, function, process, task, thread, or any other type and/or form of executable instruction which is designed to and capable of executing the functionality of the present invention as described herein, and which may operate in any portion or combination of user-mode **332** and/or kernel-mode **334**.

[**0118**] As illustrated in **FIGS. 1A-1C**, the remote access client **120** of the present invention may be deployed and used in a variety of ways to communicate and provided remote access over a network to other computing devices, such as via a gateway **340** or directly between peer computing devices. In these variety of environments, the remote access client **120** may be used to practice one or more of the optimization techniques of the present invention as described in more detail below. For example, the remote access client **120** may be used for optimizing any real-time data communications, such as VoIP, desktop sharing, or web conferencing in any of the illustrative environments of **FIGS. 1A-1C**.

[**0119**] In the illustrative embodiments of **FIGS. 1A-1C**, the computing devices **102***a*-**120***n*, such as for any of the clients **105**, server, or the gateway **340**, may be provided as any type and/or form of computing device such as a personal computer or computer server of the sort manufactured by the Hewlett-Packard Corporation of Palo Alto, Calif. or the Dell Corporation of Round Rock, Tex. **FIGS. 1D and 1E** depict block diagrams of a computing device **102** useful for practicing an embodiment of the present invention. As shown in **FIGS. 1D and 1E**, each computing device **102** includes a central processing unit **102**, and a main memory unit **104**. As shown in **FIG. 1D**, a typical computing device **102** may include a visual display device **124**, a keyboard **126** and/or a pointing device **127**, such as a mouse. Each computing device **102** may also include additional optional elements, such as one or more input/output devices **130***a*-**130***b* (generally referred to using reference numeral **130**), and a cache memory **140** in communication with the central processing unit **102**.

[**0120**] The central processing unit **102** is any logic circuitry that responds to and processes instructions fetched from the main memory unit **104**. In many embodiments, the central processing unit is provided by a microprocessor unit, such as: the 8088, the 80286, the 80386, the 80486, the Pentium, Pentium Pro, the Pentium II, the Celeron, or the Xeon processor, all of which are manufactured by Intel Corporation of Mountain View, Calif.; the 68000, the 68010, the 68020, the 68030, the 68040, the PowerPC 601, the PowerPC604, the PowerPC604e, the MPC603e, the MPC603ei, the MPC603ev, the MPC603r, the MPC603p, the MPC740, the MPC745, the MPC750, the MPC755, the MPC7400, the MPC7410, the MPC7441, the MPC7445, the MPC7447, the MPC7450, the MPC7451, the MPC7455, or the MPC7457 processor, all of which are manufactured by Motorola Corporation of Schaumburg, Ill.; the Crusoe TM5800, the Crusoe TM5600, the Crusoe TM5500, the Crusoe TM5400, the Efficeon TM8600, the Efficeon TM8300, or the Efficeon TM8620 processor, manufactured by Transmeta Corporation of Santa Clara, Calif.; the RS/6000 processor, the RS64, the RS 64 II, the P2SC, the POWER3, the RS64 III, the POWER3-II, the RS 64 IV, the POWER4, the POWER4+, the POWER5, or the POWER6 processor, all of which are manufactured by International Business Machines of White Plains, N.Y.; or the AMD Opteron, the AMD Athlon 64 FX, the AMD Athlon, or the AMD Duron processor, manufactured by Advanced Micro Devices of Sunnyvale, Calif. The computing device **102** may be based on any of the above described processors, or any other processor capable of operating as described herein.

[**0121**] Main memory unit **104** may be one or more memory chips capable of storing data and allowing any storage location to be directly accessed by the microprocessor **100**, such as Static random access memory (SRAM), Burst SRAM or SynchBurst SRAM (BSRAM), Dynamic random access memory (DRAM), Fast Page Mode DRAM (FPM DRAM), Enhanced DRAM (EDRAM), Extended Data Output RAM (EDO RAM), Extended Data Output DRAM (EDO DRAM), Burst Extended Data Output DRAM (BEDO DRAM), Enhanced DRAM (EDRAM), synchronous DRAM (SDRAM), JEDEC SRAM, PC100 SDRAM, Double Data Rate SDRAM (DDR SDRAM), Enhanced SDRAM (ESDRAM), SyncLink DRAM (SLDRAM), Direct Rambus DRAM (DRDRAM), or Ferroelectric RAM (FRAM). The main memory **104** may be based on any of the above described memory chips, or any other available memory chips capable of operating as described herein. In the embodiment shown in **FIG. 1E**, the processor **100** communicates with main memory **104** via a system bus **150**

(described in more detail below). **FIG. 1E** depicts an embodiment of a computing device **102** in which the processor communicates directly with main memory **104** via a memory port **103**. For example, in **FIG. 1E** the main memory **104** may be DRDRAM.

[**0122**] **FIGS. 1D and 1E** depict embodiments in which the main processor **100** communicates directly with cache memory **140** via a secondary bus, sometimes referred to as a backside bus. In other embodiments, the main processor **100** communicates with cache memory **140** using the system bus **150**. Cache memory **140** typically has a faster response time than main memory **104** and is typically provided by SRAM, BSRAM, or EDRAM.

[**0123**] In the embodiment shown in **FIG. 1D**, the processor **100** communicates with various I/O devices **130** via a local system bus **150**. Various busses may be used to connect the central processing unit **102** to any of the I/O devices **130**, including a VESA VL bus, an ISA bus, an EISA bus, a MicroChannel Architecture (MCA) bus, a PCI bus, a PCI-X bus, a PCI-Express bus, or a NuBus. For embodiments in which the I/O device is a video display **124**, the processor **100** may use an Advanced Graphics Port (AGP) to communicate with the display **124**. **FIG. 1E** depicts an embodiment of a computer **102** in which the main processor **100** communicates directly with I/O device **130***b* via HyperTransport, Rapid I/O, or InfiniBand. **FIG. 1E** also depicts an embodiment in which local busses and direct communication are mixed: the processor **100** communicates with I/O device **130***a* using a local interconnect bus while communicating with I/O device **130***b* directly.

[**0124**] The computing device **102** may support any suitable installation device **116**, such as a floppy disk drive for receiving floppy disks such as 3.5-inch, 5.25-inch disks or ZIP disks, a CD-ROM drive, a CD-R/RW drive, a DVD-ROM drive, tape drives of various formats, USB device, hard-drive or any other device suitable for installing software and programs such as the remote access client software **120** related to the present invention.

[**0125**] The computing device **102** may further comprise a storage device **128**, such as one or more hard disk drives or redundant arrays of independent disks, for storing an operating system and other related software, and for storing application software programs such as any program related to the remote access client **120** of the present invention. Optionally, any of the installation devices **118** could also be used as the storage device **128**. Additionally, the operating system and the proxy software **120** can be run from a bootable medium, for example, a bootable CD, such as KNOPPIX®, a bootable CD for GNU/Linux that is available as a GNU/Linux distribution from knoppix.net.

[**0126**] Furthermore, the computing device **102** may include a network interface **118** to interface to a Local Area Network (LAN), Wide Area Network (WAN) or the Internet through a variety of connections including, but not limited to, standard telephone lines, LAN or WAN links (e.g., 802.11, T1, T3, 56 kb, X.25), broadband connections (e.g., ISDN, Frame Relay, ATM), wireless connections, or some combination of any or all of the above. The network interface **118** may comprise a built-in network adapter, network interface card, PCMCIA network card, card bus network adapter, wireless network adapter, USB network adapter, modem or any other device suitable for interfacing the computing device **102** to any type of network capable of communication and performing the operations described herein.

[**0127**] A wide variety of I/O devices **130***a*-**130***n* may be present in the computing device **102**. Input devices include keyboards, mice, trackpads, trackballs, microphones, and drawing tablets. Output devices include video displays, speakers, inkjet printers, laser printers, and dye-sublimation printers. The I/O devices may be controlled by an I/O controller **123** as shown in **FIG. 1D**. The I/O controller may control one or more I/O devices such as a keyboard **126** and a pointing device **127**, e.g., a mouse or optical pen. Furthermore, an I/O device may also provide storage **128** and/or an installation medium **118** for the computing device **102**. In still other embodiments, the computing device **102** may provide USB connections to receive handheld USB storage devices such as the USB Flash Drive line of devices manufactured by Twintech Industry, Inc. of Los Alamitos, Calif.

[**0128**] In further embodiments, an I/O device **130** may be a bridge **170** between the system bus **150** and an external communication bus, such as a USB bus, an Apple Desktop Bus, an RS-232 serial connection, a SCSI bus, a FireWire bus, a FireWire 800 bus, an Ethernet bus, an AppleTalk bus, a Gigabit Ethernet bus, an Asynchronous Transfer Mode bus, a HIPPI bus, a Super HIPPI bus, a SerialPlus bus, a SCI/LAMP bus, a FibreChannel bus, or a Serial Attached small computer system interface bus.

[**0129**] A computing device **102** of the sort depicted in **FIGS. 1D and 1E** typically operate under the control of operating systems, which control scheduling of tasks and access to system resources. The computing device **102** can be running any operating system such as any of the versions of the Microsoft® Windows operating systems, the different releases of the Unix and Linux operating systems, any version of the MacOS® for Macintosh computers, any embedded operating system, any real-time operating system, any open source operating system, any proprietary operating system, any operating systems for mobile computing devices, or any other operating system capable of running on the computing device and performing the operations described herein. Typical operating systems include: WINDOWS 3.x, WINDOWS 95, WINDOWS 98, WINDOWS 2000, WINDOWS NT 3.51, WINDOWS NT 4.0, WINDOWS CE, and WINDOWS XP, all of which are manufactured by Microsoft Corporation of Redmond, Wash.; MacOS, manufactured by Apple Computer of Cupertino, Calif.; OS/2, manufactured by International Business Machines of Armonk, N.Y.; and Linux, a freely-available operating system distributed by Caldera Corp. of Salt Lake City, Utah, Java or Unix, among others.

[**0130**] In other embodiments, the computing device **102** may have different processors, operating systems, and input devices consistent with the device. For example, in one embodiment the computer **102** is a Zire 71 personal digital assistant manufactured by Palm, Inc. In this embodiment, the Zire 71 operated under the control of the PalmOS operating system and includes a stylus input device as well as a five-way navigator device.

[**0131**] Moreover, the computing device **102** can be any workstation, desktop computer, laptop or notebook computer, server, handheld computer, mobile telephone, any other computer, or other form of computing or telecommu-

nications device that is capable of communication and that has sufficient processor power and memory capacity to perform the operations described herein.

[0132] In one aspect, the present invention is related to providing various techniques for optimizing communications between computing devices, such as depicted in any of the illustrative environments **FIGS. 1A-1C**. The present invention provides the following techniques, which may be practiced stand-alone or in any combination: 1) peer-to-peer route optimization, 2) communications via a lossless protocol of packets constructed for transmission via a lossy protocol, 3) reducing network fragmentation by adjusting maximum transmission unit (MTU) adjustment to account for encryption, 4) client-side application-aware network communication prioritization, and 5) shielding a device from network disruption. The peer-to-peer route optimization technique will be discussed in conjunction with **FIGS. 2A and 2B**, techniques for communications via a lossless protocol of packets constructed for transmission via a lossy protocol are discussed in conjunction with **FIGS. 3A and 3B**, the MTU adjustment technique in conjunction with **FIG. 4**, the client-side application-aware prioritization technique in conjunction with **FIGS. 5A and 5B**, and the network disruption shielding in conjunction with **FIGS. 6A and 6B**.

[0133] In one aspect, the present invention is related to providing a peer-to-peer route optimization technique between a first computing device accessing a second computing device via a gateway, such as the gateway **340** illustrated in **FIG. 1A**. The peer-to-peer routing techniques provides a more optimal and direct communication between computing devices establishing or attempting to establish a communication session via a gateway. The illustrative method **260** of an embodiment of the present invention will be discussed in view of the illustrative environment **200** of **FIG. 2A**. In brief overview, the environment **200** includes a gateway **340** providing remote access connectivity to a private network, such as a network with IP address ranges 10.10.10.XXX. The gateway **340** in association with the private network may have assigned an IP address of 10.10.10.2 for communications on the private network. This private network may include a server **102***c*. Also, the private network comprises a telecommunication device **210***c*, such as any type and/or form of VoIP telephone. The telecommunication device **210***c* is assigned IP address 10.10.10.100 on the private network.

[0134] In one embodiment, the server **102** comprises a signaling server, which may provide any type and/or form of signaling services for establishing a communication session between computing devices, such as a first computing device **102***a* and a second computing device **102***b*. In one embodiment, the server **102***c* supports a Session Initiation Protocol, SIP, which is an Internet Engineering Task Force (IETF) standard protocol for initiating an interactive user session that involves multimedia elements such as video, voice, chat, gaming, and virtual reality. In one embodiment, SIP works in the application layer of the Open Systems Interconnection (OSI) communications model. In some embodiments, the first computing device **102***a* initiates a session via signaling, such as via the SIP protocol, to the signaling server **102***c* via signaling path **220**. In one embodiment, the signaling server **102***c* in conjunction with the gateway **340** is used for establishing a media path **225** between the first computing device **102***a* and the second computing device **102***b*, such as for a VoIP telecommunication session between telephones **210***a* and **210***b*.

[0135] The first computing device **102***a* of environment **200** may be part of a network, private or public, accessing the gateway **340** via network **104** over the connection **341***a* and traversing the firewall **205***a*. The firewall **205***a* provides access to and traversal of a public network, and has assigned the IP address of 24.24.24.100. The first computing device **102***a* may be in communication with, or interfaced or coupled to a telecommunication device **210***a*, such as a VoIP communication device, or any other real-time data communication device. The second computing device **102***b* may be part of a private network and have assigned the IP address of 192.168.20.20. Additionally, the second computing device **102***b* may include a software based telecommunication device **210***b*, such as software-based VoIP telecommunication device or program. The second computing device **102***b* may access the gateway **340** via network **104** over connection **341***b* and traversing firewall **205***b* having a public network IP address of 216.216.10.10. The firewalls **205***a* and **205***b* may be any type and/or form of firewall as known to those ordinarily skilled in the art, such as a NAT firewall.

[0136] The first computing device **102***a* and second computing device **102***b* of **FIG. 2A** includes and uses the remote access client **120** of the present invention to provide an ad-hoc peer-to-peer virtual network connectivity in the environment **200**. In addition to maintaining a tunnel and virtual private connection, such as an SSL VPN connection, to the gateway **340**, the remote access client **120** of the present invention also has logic, functionality, and operations to establish a direct ad-hoc connection, such as an SSL VPN connection, to a peer it is trying to reach. In view of **FIG. 2A**, the illustrative method **260** of **FIG. 2B** will be used to discuss how a peer-to-peer secure communication session is established for the media path **225** in one illustrative embodiment of the present invention. The peer-to-peer routing technique of the present invention as illustrated by method **260** provides better voice quality and reduces latency related to VoIP communications as well as other real-time data communications.

[0137] In brief overview of illustrative method **260**, at step **262**, the computing devices **102***a* and **102***b* establish tunneling sessions with the gateway **340**. At step **264**, the first computing device **102***a* initiates a session to second computing device **102***b* via gateway **340** using signaling protocol via the signaling path **220** to signaling server **102***b*. The session may be initiated by the telecommunication device **102***a* in communication with the first computing device **102***a*. At step **266**, a signaling server **102***c* sets up the telecommunication session, and at step **268**, provides the first computing device **102***a* with a first network identifier of the second computing device **102***b*. The first network identifier comprises the network address, such as a host name or IP address, of the second computing device **102***b* based on its IP address established via the tunnel **341***b* with the gateway **340**. At step **270**, the first computing device **102***a* communicates to the second computing device **102***b* using the first network identifier to establish a connection or communication session.

[0138] In further overview, at step **272**, the gateway **340** intercepts the communications by the first computing device

102*a* and provides the first computing device **102***a* a second network identifier for the second computing device **102***b*. The second network identifier comprises an IP address or host name of the second computing device **102***a* directly or publicly accessible by the first computing device **102***a*, such as the last known public IP address of the second computing device **102***b*. At step **274**, in one embodiment, the gateway **340** communicates to the second computing device **102***b* to request the second computing device **102***b* establish a swimmer session for first computing device **102***a* to connect to the second computing device **102***b* via firewall **205***b*. In some embodiments, the gateway **340**, at step **276**, may negotiate or otherwise provide encryptions keys for the first computing device **102***a* and second computing device **102***b*. At step **278**, the first computing device **102***a* establishes a direct connection, communication session, or media path **225** to the second computing device **102***b*. In other embodiments, at step **280**, the first computing device **102***a* and/or second computing device **102***b* match encryption keys received by the other computing device before allowing communications.

[**0139**] In some embodiments of illustrative step **262**, the computing device **102***a* and **102***b* may establish a connection with the gateway **340** by any suitable means and/or mechanisms, such as by any type and/or form of tunneling or gateway protocol. In some embodiments, the connections **341***a* and **341***b* to the gateway **340** may form a virtual private network connection, and in other embodiments, may use SSL or TLS to provide secure communications to the private network, such as the private network identified by the IP range 10.10.10.XXX in illustrative **FIG. 2A**. In one embodiment, the computing devices **102***a* and **102***b* connect to the gateway **340** by traversing a firewall **205***a*-**205***b* via a public network, while, in other embodiments, the computing devices **102***a* and **102***b* may connect to the gateway **340** via a private network, and may not traverse a firewall **205***a*-**205***b*. One ordinarily skilled in the art will recognize and appreciate the variety of ways the computing devices **102***a*-**102***b* may connect to and communicate with the gateway **340**.

[**0140**] At illustrative step **264**, in one embodiment, the telecommunication device **210***a*, such as a hard IP phone, initiates a telecommunication session, such as a telephone call, to the telecommunication device **210***b*, such as a soft IP phone. In some embodiments, the telecommunication device **210***a* initiates the telephone call by indicating the extension of the telecommunication device **210***b*. When the telecommunication device **210***a* initiates the telecommunication session, this initiation, indication, or request to establish a telecommunication session or media session may be sent to the signaling server **102***a* via SIP protocol, a proprietary signaling protocol, or any other type of protocol suitable for signaling. The signals are communicated via signaling path **220** via the tunneling session **341***a* to the gateway **230** and reach the signaling server **102***c* via the intranet routes of the private network behind the gateway **340**.

[**0141**] Although the illustrative embodiment of method **260** is discussed in view of VoIP or telecommunication signaling and sessions, one ordinarily skilled in the art will recognize and appreciate that the present invention may be used for initiating any type and/or form of communication session, real-time or otherwise, such as an interactive user session that involves multimedia elements such as video, voice, chat, gaming, and virtual reality. As such, the telecommunication devices **210***a*-**210***b*, signaling/signal path **220**, and signaling server **120***a* may accordingly and suitably comprise the type and/or form of device, signaling, protocols, and communications corresponding to the type and/or form of communication session.

[**0142**] In some embodiments of illustrative step **266**, the signal server **102***c* may set up, negotiate, or establish any type and/or form of communication session, and in one embodiment the signaling server **102***c* sets up a telecommunication session, such as the VoIP telephone call initiated by the telecommunication device **210***a*. When setting up the telecommunication or other media session, the signaling server **102***c*, at step **270**, instructs, requests, signals or otherwise communicates to the initiating telecommunication device **210***a* and/or first computing device **102***a* to contact, signal, connect, or otherwise communicate to the peer telecommunication device **210***b* via a certain network address. In some embodiments, the network address provided by the signaling server **102***c* to the initiating telecommunication device **210***a* comprises the network address for the computing device **102***b* on the private network, i.e., 10.10.10.XXX, behind the gateway **340**. In one embodiment, the network address for the peer telecommunication device **210***b* may comprise an enterprise private network address.

[**0143**] At this point, instead of contacting the peer telecommunication device **210***b* via its VPN private IP address, the illustrative method of **260**, via the remote access client **120** facilities the telecommunication device **210***a* and/or the first computing device **102***a* to directly contact the peer or target telecommunication device **210***b* or the second computing device **102***b*. The techniques of the present invention is not specific to any VoIP protocol, and may be applied to any other protocols, such as any peer-to-peer protocol between computing devices. The techniques of the present invention makes decisions by way of the IP address of the resource a client is trying to connect with.

[**0144**] At step **270**, when the telecommunication device **210***a* initiates a data connection to the telecommunication device **210***b* with the first network address provided by the signaling server **120***c* at step **268**, such as the VPN private IP address of the soft IP phone, the gateway **340** intercepts the communication to provide the telecommunication device **210** and/or first computing device **102***b* with a second network address for contacting the telecommunication device **210***b*. In one embodiment, the gateway **340** intervenes and sends an out of band signal over the same established VPN tunnel **341***a* to the first computing device **102***a* that is facilitating traffic for the hard IP phone **210***a*. One ordinarily skilled in the art will recognize and appreciate that the gateway **340** may communicate to the telecommunication device **210** and/or computing device **102***a* that network address for contacting the computing device **102***b* and/or telecommunication device **210***b* directly by any suitable means and/or mechanisms. For example, the gateway **340** may communicate the second network address to the first computing device **102***a* via a second tunneling session.

[**0145**] In some embodiments, the gateway indicates to the first computing device **102***a* of the last known public IP address that the second computing device **102***b* which is

running the soft IP phone **210***b* used to contact the gateway **340**. In other embodiments, this public IP may not be the actual IP address of the second computing device but may be the IP address of the firewall **205***b* that the second computing device **102***b* is behind. If the computing device **210***a* contacts the public IP address of the firewall **205***b* directly, packets may be rejected by the firewall **205***b*. In these embodiments, the gateway **340** instructs the computing device **102***b* to establish what is known to those skilled in art as a swimmer session to the first computing device **102***a*. A forward hole is punched in the firewall **205***b* via which the first computing device **102***a* can traverse or get back in. In other embodiments, any suitable means and/or mechanism may be used to allow the first computing device **102***a* to traverse the firewall **205***b* to connect and communicate with the second computing device **102***b*.

[**0146**] Although illustrative method **260** is discussed in conjunction with environment **200** of **FIG. 2A** having the second computing device **102***n* behind a firewall **205***a*, as one ordinarily skilled in the art will recognize and appreciate, the illustrative method **260** can be used in environments where the second computing device **102***b* is directly accessible without traversing a firewall **205***a*. As such, the illustrative method **260** may not need to at step **274** instruct the second computing device **102***b* to provide a swimmer session or other mechanism for the first computing device **102***a* to connect to the second computing device **102***b*.

[**0147**] In some embodiments, the gateway **340**, at step **276**, may negotiate a secret key between the computing devices **102***a*-**103***b* for secure communications. The remote access client **120** on the computing devices **102***a*-**102***b* may use this key for secure and encrypted communicates, and/or to authenticate or authorize the other computing device. In other embodiments, to ensure that malicious computing devices do not take advantage of this open hole, the gateway **340** at step **276** negotiates a secret key between the two computing devices **102***a* and **102***b* and the respective remote access clients **120** ensure that the keys match before allowing data communication. For example, in the embodiment of establishing a swimmer session, this key ensures that the packets coming in the open hole are from the computing device that the swimmer session was meant for.

[**0148**] In other embodiments, the gateway **340** does not perform step **276** to provide a secure mechanism of peer-to-peer communication sessions between the computing devices **102***a*-**102***b*. For example, the computing devices **102***a*-**102***b* may be in the same private enterprise network and therefore, may be trusted. In further embodiments, instead of the gateway **340** negotiating a secret key, the computing devices **102***a*-**102***b* use any suitable means and/or mechanism for authenticating and/or authorizing the other computing device for peer-to-peer communications. In some embodiments, the computing devices **102***a*-**102***b* may authenticate and/or authorize via the gateway tunneling sessions, such as via path **341***a*, or at step **280**, via the media path **225** established at step **278**. For example, the remote access clients **120** of each computing device **102***a*-**102***b* may check for matching keys over established media path **225** before allowing any data to be communication over the connection **225**.

[**0149**] At step **278**, the direct media path **224** for any type and/or form of communications is established between the computing devices **102***a*-**102***b* without traversing the gateway **340**, and, in some embodiments, not using the respective VPN assigned IP addresses of the computing devices **102***a*-**102***b* but instead their public IP address or the IP address assigned to them by their resident network. Using the techniques of the present invention, the respective remote access client **120** of computing devices **102***a*-**102***b* act as temporary peer-to-peer SSL gateways to each other, decrypting each other's SSL session directly without communicating via the gateway **340**. The direct peer-to-peer communication session via path **225** avoids the extra-hop via the gateway **340**. This will reduce any latency due to taking a longer route via the gateway **340**, and will improve the quality, performance, and experience of real-time data communications, such as the VoIP communications illustrated in **FIG. 2A**.

[**0150**] In some embodiments, the gateway **340** may be configured to automatically perform the techniques of illustrative method **260** every time a computing device **102** is trying to establish a peer-to-peer communication session or otherwise access a resource via the gateway **340**. In other embodiments, the gateway **340** may be configured to automatically perform the techniques of the illustrative method **260** only for a certain IP address range either for a source IP address, a destination IP address, or any combinations thereof. In further embodiments, the gateway **340** may perform this technique based on the type of application and/or resource being accessed via the gateway **340**. For example, in one embodiment, the gateway **340** may automatically perform this technique for any type of desktop or screen sharing application sharing screen data via the gateway **340**. In other embodiments, the gateway **340** may determine to perform this technique based on any type and/or form of business rules, access control policies, or other configuration, algorithm, and statistics. For example, the gateway **340** may perform this technique based on ping-based timing statistics between peer computing devices. If the peer computing devices are closer to each other than the gateway **340**, the gateway performs the peer-to-peer routing technique. One ordinarily skilled in the art will recognize and appreciate the various ways the gateway of the present invention may be adapted or otherwise configured to perform the peer-to-peer routing technique of the present invention.

[**0151**] In one aspect, the present invention is related to allowing communications via a lossless protocol packets constructed for transmission via a lossy protocol. In one technique illustrated in **FIG. 3B**, the present invention use a false acknowledgement technique when communicating a lossy or unreliable protocol via a lossless or reliable protocol, such as, for example, communicating RTP over UDP via a TCP or SSL/TCP connection. In another technique illustrated in **FIG. 3C**, the present invention uses payload shifting to communicate via a lossless protocol packets constructed for transmission via a lossy protocol. In some embodiments, these techniques of the present invention helps achieve Transport Layer Security (TLS) at a UDP level as one ordinarily skilled in the art will recognize and appreciate in view of the description below.

[**0152**] The illustrative method **360** of the embodiment of the present invention for practicing the false acknowledgement technique will be discussed in view of the illustrative environment **300** of **FIG. 3A** and additionally in view of

FIGS. 1A-1E. In brief overview, the environment **300** comprises a client **105***a* of computing device **102***a* in communications with a peer client **105***b* of computing device **102***b* or alternatively, the gateway **340** via network **104**. In some embodiments, the client **105***a* may traverse IP routers **305***a*-**305***b* or the network **104** may have IP routers **305***a*-**305***b*. Although, in other embodiments, the computing devices **102***a*-**102***b* and gateway **340** may be on the same network **104**. Additionally, a telecommunication device **210***a* may be associated with client **105***a* and a second telecommunication device **210***b* may be associated with the peer client **105***b* or the gateway **340**.

[**0153**] Client **105***a* may comprise a first network stack **310***a*, and the client **105** or gateway **340** may comprise a second network stack **310***b*. The network stacks **3201***a*-**310***a* may comprise one or more network layers, such as any networks layers of Open Systems Interconnection (OSI) communications model. For example, as illustrated in **FIG. 3A**, the network stacks **310***a*-**310***b* comprises a TCP/IP **343***a*-**343** communication layer communication on top of the frame layer that is suitable as known to those skilled in art for a TCP/IP based network **104**. The TCP layer **343***a*-**343***b* comprises an illustrative embodiments of a reliable or lossless protocol. For example, in TCP **343***a*-**343***b* as known to those ordinarily skilled in the art, the network stack **310***a*-**310***b* or any drivers or mechanisms thereof, such as a TCP driver, may perform algorithms and operations, and comprise logic or functionality to provide one or more of the lossless or reliable characteristics of the protocol. For example, to support TCP **343***a*-**343***b*, the network stack **310***a*-**320***b* may perform packet ordering, packet retransmission, acknowledgements of receipt of packet, a flow control algorithm, a sliding window algorithm, and/or a nagle's algorithm, and any other reliability related operations and algorithms as one ordinarily skilled in the art will recognize and appreciate in view of TCP **343***a*-**343***b* or any other lossless protocol.

[**0154**] Additionally, the networks stacks **310***a*-**310***b* may comprise an SSL **341***a*-**341***b* layer for supporting SSL or SSL VPN communications. For example, the SSL layer **341***a*-**341***b* may be used for a gateway or tunneling session between remote access clients **120** or between a remote access client **120** and a gateway **340**. As illustrated in **FIG. 3A**, the network stacks **310***a*-**310***b* may also provides a layer for a lossy protocol **342***a*-**342***b*, such as UDP, to be communicated over the lossless protocol **343***a*-**343***b*, such as TCP. In some embodiments, the lossy or unreliable protocol **342***a*-**342***b* may comprises Real Time Protocol (RTP) over UDP, and may comprise a payload have any type and/or form of real-time data, such any representation of voice or audio. In other embodiments, the lossy protocol **342***a*-**342***b* may carry the VoIP over communications to and from the client **105***a* in an established VoIP session, such as a session established via illustrative method **260** discussed above in connection with **FIGS. 2A and 2B**. A lossless protocol, such as UDP **342***a*-**342***b* may be chosen for real-time applications like voice, because it may be more important to get packets to the recipient, such as peer client **105***b*, on time rather than getting the packets in a reliable manner, such as via a lossless protocol.

[**0155**] The network stacks **310***a*-**310***b* also include a shim **322***a*-**322***b* of the remote access client **120** of the present invention. The shim **322***a*-**322***b* may comprise any portion of the remote access client **120**, and in some embodiments, comprises a network driver, network driver interface, or other network layer related mechanism for providing the false acknowledgement technique of the present invention as described herein. The shim **322***a*-**322***b* may comprise software, hardware, or any combination of software and hardware. In one embodiment, the shim **322***a*-**322***b* may operate at the IP layer of the network stack prior to a network packet reaching the TCP layer **343***a*. In other embodiments, the shim **322***a*-**322***b* may operate at the TCP layer **343***a*-**343***b*. One ordinarily skilled in the art will recognize and appreciate that the shim **322***a*-**322***b* may operate in any manner associated with the layer of operations of the lossless protocol in the network stack **310***a*-**310***b*, including in or adjacent to the layer of the lossless protocol.

[**0156**] The false acknowledgement technique of the present invention as illustrated by method **360** of **FIG. 3B** allows a lossy protocol, such as UDP **342***a*-**343***b*, to be communicated via a lossless protocol, such as TCP **343***a*-**343***b*. By the shim **322***a*-**322***b* issuing a false acknowledgement of receipt of a TCP packet, the technique of the present inventions prevents or avoid the reliability mechanisms, operations and algorithms of the lossless protocol, such as in the example of TCP **343***a*-**343***b*, any of the packet ordering, packet retransmission, a flow control algorithm, a sliding window algorithm, and/or a nagle's algorithm. As such, the lossy protocol **342***a*-**342***b* can be communicated over a lossless protocol **343***a*-**343***b* but maintain its lossy or unreliable characteristics which may be desired such as in real-time data communications. This technique also enables the lossy protocol to be communicated securely, or traverse a gateway via a tunneling protocol, or simply via TCP/IP while not applying the lossless characteristics of the lossless protocol to the lossy protocol communications.

[**0157**] In brief overview of illustrative method **360**, at step **365**, the computing devices **102***a* and **102***b* or the gateway **340** establish a lossless protocol based connection, such as a TCP connection, by which lossless protocol packets are communicated. At step **370**, the remote access client **120** of the present invention may detect that the payload of a lossless protocol packet comprises a lossy protocol, such as RTP or UDP, or otherwise comprises real-time data. In one embodiment, at step **375**, the illustrative method **360** may encrypt the payload with a key, such as a key provided via an out of band TLS or SSL session of step **367**. At step **380**, a false acknowledgement of receipt of the lossless protocol packet may be communicated or otherwise provided to the network stacks **310***a*-**310***b*, such as by the shim **322***a*-**322***b*. In response to the receipt of the false acknowledgement of receipt of the lossless protocol packet, at step **385**, the respective network stacks **310***a*-**310***b* do not execute one or more, or all of the algorithms and operations that provide the reliable or lossless characteristics of the lossless protocol. At step **390**, the lossless protocol packet with the lossy protocol payload is communicated between the network stacks **310***a*-**310***b*.

[**0158**] At step **365** of illustrative method **360**, the lossless protocol connection may be established via any suitable means and/or mechanisms using an type and/or form of lossless protocol. In one embodiment, the network stack **310***a* of a client **105***a* establishes a lossless protocol connection, such as TCP, to a peer client **105***a* having network stack **310***b*. In another embodiment, the network stack **310***a*

of client **105***a* establishes a lossless protocol connection to a gateway **340** having network stack **310***b*. Additionally, the lossless protocol connection of step **365** may be established in a secured manner, such as SSL, or as a virtual private connection. Although the network stacks **310***a*-**310***b* are illustrated as having the same network layers, one ordinarily skilled in the art will recognize and appreciate that the network stacks may have corresponding layers, which may be of different versions or associated with different operating systems and/or drivers, and that each network stack **310***a*-**310***b* may have additional layers, less layers or different layers.

[**0159**] At illustrative step **360**, in one embodiment, the remote access client **120** intercepts a network packet, such as via the packet capture mechanism **365**, and inspects the network packet by any suitable means and/or mechanisms to determine the type of the protocol used in the payload of the network packet, or the type of contents in the payload of the network packet. In some embodiments, the shim **322***a*-**322***b* of the remote access client **120** may be used for intercepting and inspecting the network packet. In one embodiment, the remote access client **120** may intercept a network packet and determine if the network packet comprises any lossless protocol or a specific lossless protocol, such as TCP. If the network packet is a lossless protocol, the remote access client **120** checks the payload to determine the type of protocol and/or the type of data. In one embodiment, the remote access client **120** may determine by any suitable fields of the payload of the network packet, such as any portion of header of the lossy protocol representing the payload, that the payload has a lossy protocol content. In another embodiment, the remote access client **120** may determine by any data of the payload, if the payload comprises a lossy protocol or comprises real-time data.

[**0160**] In one embodiment, the remote access client **120** determines that a TCP packet comprises a payload of RTP or UDP, and applies an encryption of the payload. The remote access client **120** may encrypt the payload of the network packet using any type and/or form of encryption with a key provided in any suitable manner. In some embodiments, the key or cipher is negotiated via an out of band TLS session between the clients **105***a*-**105***b* or the client **105***a* and gateway as shown in **FIG. 3A** as opposed to, in other embodiments, a traditional TLS session where the session is first negotiated and the same socket is used for data communication. In some embodiments, the encryption at step **375** is performed on a packet by packet basis. In another embodiment, encryption is performed on multiple packets at a time.

[**0161**] At step **380** of illustrative method **360** of the present invention, a false acknowledgment of receipt of the network packet, e.g., the lossless protocol packet, is issued, communicated, or otherwise provided to the network stacks **310***a*-**310***b* comprising the respective sending and receiving computing devices **102***a*-**120***b*, or gateway **340**. The shim **322***a*-**322***b*, any portion of the remote access client **120**, or any portion of the network stack **310***a*-**310***b* may issue the false acknowledgment of receipt of the network packet. In one aspect, the false acknowledgement of receipt of the network packet is false in the sense that it is communicated not to acknowledge the actual receipt of a network packet but in order to prevent the lossless and reliable mechanisms of the lossless protocol associated with the network stacks **310***a*-**310***b*. As such, the false acknowledgement of receipt of the network packet may comprise the same form and/or type as an actual acknowledgement of receipt of the network packet.

[**0162**] In some embodiments, the false acknowledgement of receipt is issued to the network stacks **310***a*-**310***b* prior to communicating the network packet or packets. In other embodiments, the false acknowledgement of receipt is issued after communicating the network packet(s) but at a time or in a manner such as to prevent the lossless protocol mechanisms of the receiving network stack **310***a*-**310***b* from being applied to the transmitted network packet. In one embodiment, the false acknowledgment of receipt of the network packet is issued for each network packet, and in another embodiment, may be issued once per communication session or lossless protocol connection. Furthermore, one ordinarily skilled in the art will recognize and appreciate the false acknowledgement of receipt may be performed in different places in the network stack **310***a*-**310***b* for different operating systems. For example, in one embodiment, the acknowledgement of receipt may be issued at the Network Driver Interface Specification (NDIS) driver level in the Microsoft Family of Windows Operating Systems.

[**0163**] At step **385** of illustrative method **360**, the network stack **310***a*-**310***b* receiving the false acknowledgment of receipt of the network packet from step **380** may in response to such receipt, may not execute, stop executing, or prevent from executing any one or more algorithms and operations providing one or more lossless characteristics of the lossless protocol. For example, in the embodiment of TCP as the lossless protocol, the network stack **310***a*-**310***b* may not execute any one or more of the following with respect to the network packet, or the TCP connection: packet ordering, packet retransmission, a flow control algorithm, a sliding window algorithm, and/or a nagle's algorithm. In some embodiments, the false acknowledgment of receipt must be received on a packet by packet basis to prevent the lossless layer of the network stack **310***a*-**310***b* from employing reliability algorithms. As such, the sending network stack **310***a*-**310***b* can determine on a packet by packet basis which packets to apply the false acknowledgment techniques of the present invention to. There may be some lossless protocol network packets comprising the lossy protocol for which the reliability algorithms of the lossless protocol should be applied. In other embodiments, the false acknowledgment of receipt of the network packet may be received once for the lossless protocol connection to prevent employing reliability algorithms for any subsequent packets received during the lossless protocol session or connection.

[**0164**] At step **390**, the illustrative method **360** communicates the lossless protocol packet having the lossless protocol payload via the network stacks **310***a*-**310***b*. In one embodiment, the lossless protocol packet is communicated after step **385**, or in other embodiments, before step **385**. So, although the lossless protocol packet becomes lost in the network, no attempt is made to reclaim the packet as one would expect for a lossy protocol packet.

[**0165**] Although the illustrative embodiment of method **360** is discussed using a false acknowledgment of receipt of the network packet such as in TCP, any type and/or form of indication, request, or instruction may be communicated to the network stacks **310***a*-**310***b* to prevent employing any

reliability or lossless algorithms of the lossless protocol. In some embodiments, the lossless protocol layer of the network stack **310***a*-**310***b* may be adapted or configured to have a configuration, flag, or instruction to not use the reliability algorithms either on a packet by packet basis, or a session or connection basis. For example, the lossless protocol may have fields, such in a header of a lossless protocol packet, that indicates whether reliability should be discarded or avoided for the packet.

[**0166**] Referring now to **FIG. 3C**, another embodiment of steps taken to transmit packets constructed according to a lossy protocol via a lossless protocol is shown by illustrative method **345**, which may also be referred to as a payload shifting technique. In brief overview of illustrative method **345**, at step **348**, a first packet to be transmitted using an unreliable transport protocol is received by a first device, such as client **105**. At step **350**, the first device **105** creates a first TCP packet including a first payload of the received first packet and a first TCP header of information associated with a TCP connection established between the first device **105** and a second device. The first device **105** transmits the first TCP packet to the second device at step **352**. At step **354**, the first device **105** receives a second packet to be transmitted using an unreliable transport protocol, and at step **356**, creates a second TCP packet including a second payload of the received second packet and the first TCP header information. At step **358**, the first device transmits, before receipt of an acknowledgement of the receipt of the first payload from the second device, the second TCP packet to the second device.

[**0167**] Still referring to **FIG. 3C**, and now in more detail, at step **348**, a first packet to be transmitted using an unreliable transport protocol is received by a first device **105**. In some embodiments, the packet is intended to be transmitted using a lossy protocol of UDP. In further embodiments, the packet comprises RDP over UDP. In other embodiments, the first packet is generated by an application program **338** executing in user mode **332**. In some embodiments, the packet is generated by an application **338** executing in kernel mode **334**. In other embodiments, the first packet is received by the first device **105** for retransmission. In still other embodiments, the first packet is intercepted by a filter process **322** before it reaches the network stack **310***a*-**310***b*. The filter process **322** may execute in user mode **332** or in kernel mode **334**. In some embodiments, the filter **322** is a mini-driver. In other embodiments, the filter **322** is an NDIS driver. In other embodiments, the filter **322** process uses application hooking to intercept the first packet. In further embodiments, the application hooking is implemented via an application programming interface (API). In one embodiment, the hooking of network packets occurs at the network layer of the network stack **310***a*-**310***n*.

[**0168**] At step **350**, the first device **105** creates a first TCP packet including a first payload of the received first packet and a first TCP header of information associated with a TCP connection established between the first device **105** and a second device. For example, the TCP connection may be established between the client **105** and a peer computing device **102***b* in one embodiment, and between the client **105** and the gateway **340** in another embodiment. In some embodiments, the first device **105** indicates that the TCP packet contains a payload of packets constructed to be transmitted via a lossy protocol by opening a specific TCP port. In other embodiments, the first device **105** indicates that the TCP packet contains a payload of packets constructed to be transmitted via a lossy protocol by setting a flag in the TCP header. The TCP header may include information regarding the source node, information regarding the destination node, or a sequence number particularly identifying the TCP packet.

[**0169**] At step **352**, the first device **105** transmits the first TCP packet to the second device. In some embodiments, the second device may be a gateway **340**. In other embodiments, the second device is a "peer" computing device **102***b*. The first TCP packet may be encrypted before transmission to the second device using, for example, SSL or TLS.

[**0170**] At step **354**, the first device **105** receives a second packet to be transmitted using an unreliable transport protocol, such as UDP. The second packet may be received from the same application **338** that generated the first packet. At step **356**, the first device **105** creates a second TCP packet including a second payload of the received second packet and the first TCP header information, as described above. At step **358**, the first device **105** then transmits, before receipt of an acknowledgement of the receipt of the first payload from the second device, the second TCP packet to the second device. In some embodiments, when an acknowledgment is received from the second device, the first device **105** updates the TCP header information before transmitting the packet. In other embodiments, the first device **105** creates a third TCP packet with updated TCP header information and having the second payload. The first device then transmits the third TCP packet.

[**0171**] Upon receipt of the TCP packet, the second device decrypts it, if necessary, and determines that the payload is one or more packets constructed to be transmitted using a lossy protocol. The second device may determine this based on the port on which the packet was received or by a flag in the TCP header information. Once determined, the second device strips the TCP header from the payload and delivers the payload.

[**0172**] In another aspect, the present invention is related to adjusting the reported maximum transmission unit (MTU) parameter to optimize network communications by reducing packet fragmentation for encrypted network packets. This technique may be applied on one or both network stacks **310***a*-**310***b* of illustrative environment **300** of **FIG. 3A**. Encrypting a payload of a network packet, such as any network packet processed according to the illustrative method **360** described above, may increase the size of the payload. That is, the size of the network packet may increase to account for the change in size of the unencrypted original payload to the encrypted payload.

[**0173**] Still referring to **FIG. 3A**, the network stacks **310***a*-**310***b* may comprise a maximum transmission unit **402***a*-**402***b* (MTU) parameter to indicate the size of the largest unit of data that can be sent over a type of physical medium in a network, such as an Ethernet based network. In the embodiment of TCP/IP, the MTU **402***a*-**402***b* indicates the largest datagram or packet than can be transmitted by an Internet Protocol (IP) layer interface, without the interface needing to br4eak down or fragment the datagram into smaller units. An MTU parameter **402***a*-**402***b* may be associated with a communications interface such as a network interface card. The default MTU size for Ethernet is 1,500

bytes, and IEEE 802.3 is 1,492 bytes. As one ordinarily skilled in the art will recognize and appreciate, the default MTU size will be based on the networking technologies such as Token Ring, FDDI, X.25, etc.

[0174] Referring now to **FIG. 4**, a flow diagram depicts an illustrative embodiment of the MTU adjustment method **400** of the present invention. In brief overview, at step **405**, a session between computing devices is established, such as between a first computing device **102***a* and a second computing device **102***b*. At step **410**, one of the computing devices **102**, such as the first computing device **102***a*, detects a network packet having an encrypted payload. At step **415**, the computing device **102***a*-**120***b* determines a setting for the MTU **402***a*-**402***b* parameter of the network stack **310***a*-**310***b* to account for the size of the encrypted portion of the payload. At step **420**, the MTU **402***a*-**402***b* parameter is decreased to account for the encrypted portion. If the MTU **402***a*-**402***b* is requested or reported, the MTU **402***a*-**402***b* will indicate a size smaller than the MTU size associated with the physical layer, such as 1,500 for Ethernet.

[0175] Using this technique, any device on the network **104** may communicate network packets to the network stack **310***a*-**310***b* according to the decreased MTU size that can be encrypted along the route to the network stack **310***a*-**310***b* and not be fragmented. If the network packet is encrypted it should still fit in the actual MTU size of the physical network layer medium, such as Ethernet. For example, the MTU parameter **402***a*-**402***b* may be set to the default MTU size of 1,500 for Ethernet and in accordance with the illustrative method **400** decreased by a determined number of bytes, for example 100, to account for encryption overhead. A network packet may be transmitted from a server resource to the client comprising a size equal to the reported MTU **402***a*-**402***b* size of 1,400. The network packet may traverse the gateway **340** and get encrypted via the SSL tunnel, which in turns increases the network packet size to 1,475. Since this size fits into the MTU size of the Ethernet physical medium, the network packet will not be fragmented.

[0176] At step **405** of illustrative method **400**, any type and/or form of communication session between a first computing device **102***a* and a second computing device **102***b*, such as client **105***b* or gateway **340** of **FIG. 2A**, may be established. In some embodiments, the session is established using the remote access client **120** on a first computing device. In one embodiment, the remote access client **120** establishes a session with the gateway **340**, such as an SSL VPN session, or to another remote access client **120** on a peer computing device **102***b*.

[0177] In some embodiments of step **410**, the remote access client **120** detects a network packet having an encrypted payload. In one embodiment, the packet capture mechanism **365** intercepts network packets and the agent **326** determines if the packet is encrypted. However, any other portion of the remote access client **120**, such as the filter **322** or frame monitor **360** may determine if the packet is encrypted. In one embodiment, the entire payload of the network packet is encrypted, while in other embodiments, a portion of the payload is encrypted. The present invention may use any type and/or form of means or mechanism for determining if a packet has encryption. For example, in some cases, the remote access client **120** may check for a flag or field of the network packet indicating the payload is encrypted. In other embodiments, the remote access client **120** may check whether any portion of the payload is unintelligible, because it contains random data or noise from encryption. Additionally, the encrypted payload may be encrypted in association with any layer of the network stack **310***a*-**310***b*, such as layer 2, 3, 6 or 7 encryption.

[0178] In some embodiments of step **415**, the illustrative method **400** of the present invention determines the adjustment to the reported MTU **402***a*-**402***b* size on a packet by packet basis, or in other embodiments, on a connection or session basis, and at step **420** adjusts the MTU **402***a*-**402***b* accordingly. In one embodiment, the MTU **402***a*-**402***b* is decreased exactly by the amount of encryption overhead for the network packet. In some cases, the illustrative method **400** determines the MTU **402***a*-**402***b* size adjustment once for the entire session or connection and decreases the size of the MTU **402***a*-**402***b* to a value to account for encryption overhead for the entire session. For example, although network packets may have varying encryption overhead, the adjustment accounts for the largest encryption overhead. In further embodiments, the MTU **402***a*-**402***b* may be adjusted to take into consideration encryption that may occur when the network packet leaves the network stack **310***a*-**310***b*, such as encryption by a gateway **340** that may occur in the end-to-end network traversal of the network packet

[0179] Additionally, the MTU **402***a*-**402***b* size may be adjusted for other network performance factors in addition to the encryption overhead. In some embodiments, although the MTU **402***a*-**402***b* is decreased due to encryption overhead, it may be further decreased to account for other overhead and factors related to network communication, as well as increased in other cases. For example, the MTU **402***a*-**402***b* may have been previously adjusted for a factor not related to encryption and after using the techniques of the present invention the MTU **402***a*-**402***b* is decreased to take into account encryption overhead. One ordinarily skilled in the art will recognize and appreciate that there may be other factors and considerations for adjusting the MTU besides or in addition to adjusting for encryption overhead in accordance with the techniques of the present invention.

[0180] Referring now to **FIGS. 5A and 5B**, the present invention, in an additional aspect, is related to client-side application-aware network communication prioritization techniques. The remote access client **120** of the present invention provides for the intelligent and client centric prioritization of application network communications on a client based on the type and/or priority of an application. As depicted in the system **500** of **FIG. 5A**, the remote access client **105** of computing device **102** is connected to network **104**. The client **105** may execute one or more applications **338***a*-**338***n*, which access the network **104** via the agent **326** and filter **322** of the remote access client **120**. In some embodiments, the applications **338***a*-**338***n* provide one or more real-time data communications, such as VoIP. In other embodiments, one or more of the applications **338***a*-**338** may provide email, collaboration, online meeting, and/or desktop sharing related services or functionality.

[0181] As illustrated in **FIG. 5A**, the packet capture mechanism **365**, **365'** may be included in the filter **322** or the agent **326** of the remote access client **120**, for intercepting network traffic of any of the applications **338***a*-**338***n* of the

client **105**. The remote access client **120** may comprise any queues **540***a*-**540***n* for queuing and prioritizing network communications of the client **105**. In one embodiment, the queues **540***a*-**540***n* may be included in a network driver, such as an NDIS driver for the filter **322**, and in other embodiments, may be included with or accessible by the agent **326**. The queues **540***a*-**540***n* may comprise any type and/or form of suitable means and/or mechanisms for storing and/or arranging network packets, such as network packets intercepted by the packet capture mechanism **365**. In some embodiments, the queues **540***a*-**540***n* may be associated with or assigned to network packets related to applications **338***a*-**338***n* of the client **105**. In other embodiments, the queues **540***a*-**540***n* may be organized by levels of priority, such as high, medium, low, or numerically such as priority 1 . . . 10. One ordinarily skilled in the art will recognize and appreciate that number of queues **540***a*-**540***n* may be based on any desired granularity of prioritization, such as 3, 5 or 10 levels of priority. Additionally, some of the queues **540***a*-**540***n* may be used for receiving and/or transmitting network packets prior to being placed into and/or taken out of a priority based queue **540***a*-**540***n*.

[**0182**] The remote access client **120** may also have, access, or use a routing table **538** for determining how to route network packets of the client via the agent **326**, such as onto the network **104** via a gateway **340**. In one embodiment, the agent **326** establishes and maintains an SSL VPN connection to the gateway **340**, such as illustrated in **FIG. 1A** for example. In one embodiment, the routing table **538** comprise information about a source computing device and a destination computing device to identify a communication path or connection between a source and destination communication points. The routing table **538** may include a source IP address and source port, and an destination IP address and destination port to identify a communication path on the network **104**. For example, the source IP address and source port may represent the IP address of the client **105** and the port by which an application **338***a*-**338***n* on the client **105** communicates on the network **105**. The destination IP address may represent the IP address of a peer computing device to which the application **338***a*-**338***n* communicates with via the destination port used by the peer device.

[**0183**] Additionally, the remote access client **120** may have one or more policies **520** for specifying client-side prioritization of network communications related to applications **338***a*-**338***n* running on application. These policies **520** may be specified by any suitable means and/or mechanisms. In some embodiments, the policies **520** may be specified by the name of the application **338***a*-**338***n* and/or the type of application **338***a*-**338***n*. In other embodiments, the policies **520** may be specified in accordance to the type of one or more protocols used by the applications **338***a*-**338***n* and/or the size of the payload of the network packet. In another embodiment, the policies **520** define prioritization based on whether an application is running in the foreground or the background of the client **105**. In yet another embodiment, policies **520** may indicate prioritization based on the destination network address, such as host name or IP address, and/or destination port number. Additionally, the policies **520** may be specified hierarchically to account for multiple applications **338***a*-**338***n* and/or multiple protocols that may be executed on the client **105** at any point. Furthermore, the policies **520** may be specified conditionally, such as if one application **338***a* is running, a second application **338***b* may have a higher or lower priority. One ordinarily skilled in the art will recognize and appreciate the multitude of ways to define client-side application priorities.

[**0184**] The policies **520** may be accessible by the agent **326**, configured into the agent **326**, or loaded by the agent **326**. For example, the policies **520** may be provided by or downloaded via the gateway **340**. The policies **520** may comprise any type and format of syntax and/or language for specifying a policy, and may be provided via any type and/or form of medium, such as electronically by one or more network packets or via a file, such as an XML file. The policies **520** may be configurable by a user by any suitable means and/or mechanism. For example, the agent **326** may provide a configuration mechanism such as a user interface, graphical or otherwise, design and constructed for configuring or specifying the policies **520**.

[**0185**] In view of the system **500** of **FIG. 5A** and **FIGS. 1A-1C**, the prioritization technique of the present invention illustrated by method **550** in **FIG. 5B** will be described. In brief overview, at step **555** of the illustrative method **550**, the client **105** intercepts one or more networks packets associated with an application **338***a*-**338***n* on the client **105**, and, at step **560**, the network packets are stored to a queue **540***a*-**540***n*. At step **565**, a priority for the intercepted and queued network packet is determined based on the type and/or priority of the application **338***a*-**338***n*. At step **570**, the determined priority is indicated for the network packets, and, at step **575**, the network packets are communicated according to the determined priority. As such, the outbound network packets generated by an application **338***a*-**338***n* on the client **105** are prioritized by the client **105** prior to transmission based on the type and/or priority of the application **338***a*-**338***n*. For example, the application **338***a* may generate real-time data of VoIP communications, such as RTP over UDP via a TCP/IP session of an SSL connection to the gateway **340**. The client **105**, using the techniques of the present invention, may prioritize the real-time data communications of application **338***a* ahead of other applications, such as non-real-time data communication applications. This technique may compliment Quality of Service (QOS) networks where network traffic prioritization occurs in intermediary network devices, such as switches and routers.

[**0186**] At step **555** of illustrative method **500**, the client **105** may intercept network packets of one or more applications **338***a*-**338***n* transparently to the application **338***a*-**338***n*, the gateway **340**, a peer computing device, and any of the network layers of a network stack. In this manner, the techniques of the present invention support any type of application **338***a*-**338***n* on the client **105**. In some embodiments, the network packets are intercepted by the packet capture mechanism **360** via agent **326** or filter **322**. Any inbound and/or outbound network packets of an application **338***a*-**338***n* may be intercepted by the remote access client **120** of the present invention.

[**0187**] At step **560**, the network packets intercepted at step **555** may be stored in a queue **540***a*-**540***n*. In one embodiment, the network packet is stored to a temporary queue **540***a*-**540***n* prior to prioritizing the network packet at steps **565** and **570**. In other embodiments, the network packet is stored to a determined priority queue **540***a*-**540***n* or a queue

540*a*-**540***n* associated with an application **338***a*-**338***n* after the network packet is prioritized at steps **565** and/or step **570**.

[**0188**] At step **565**, the remote access client **120** of the present determines the association of network packets with applications **338***a*-**338***n* in order to determine priorities and apply any priority based policies **520**. The client **105**, such as via agent **326**, can associate network traffic with applications **338***a*-**338***n* by any suitable means and/or mechanisms. In some embodiments, the agent **326** identifies the network packet as generated from an application **338***a*-**338***n* by any of the content of the network packet, such as any headers, fields, or the type and content of data in the payload of the network packet. In other embodiments, a network packet is associated with an application **338***a*-**338***n* by matching information from the routing table **538**, such as source and destination IP addresses and ports numbers with the IP addresses and ports numbers of the network packet. In some embodiments, the agent **326**, such as via the frame monitor **360**, may perform a checksum on the packet to verify that the identified application actually generated the packet.

[**0189**] Additionally, the remote access client **120** may determine whether the application **338***a*-**338***n* associated with the network packet is running in the foreground or the background of the client **105**. Furthermore, the remote access client **120** may determine any priorities, such as process task priority, assigned to the application **338***a*-**338***n* by the operating system of the client **105**. In other embodiments, the remote access client **120** may determine any other characteristics or statistics of the application **338***a*-**338***n* such as size, memory usage, total execution time, and/or frequency of use. One ordinarily skilled in the art will recognize and appreciate the various characteristics of an application the present technique may use for providing client-side application-aware network communication prioritization.

[**0190**] At step **570**, the remote access client **120** of the present invention indicates a priority for intercepted and queued network packets based on the application **338***a*-**338***n* associated with the packet at step **565**. In one embodiment, the agent **326** uses the policies **520** to apply a priority to network packets of applications **338***a*-**338***n* in accordance with the prioritization rules specified or indicated by the policies **520**. In some embodiments, the agent **326** may use characteristics of the application **338***a*-**338***n*, such as running in the foreground or background, to indicate priority for a network packet of the application **338***a*-**338***n*. In other embodiments, the agent **326** may use any combination of the policies **520** and characteristics of the application **338***a*-**338***n* to indicate a priority for the network packets of the application **338***a*-**338***n*.

[**0191**] In some embodiments, the agent **326** indicates the priority to the filter **322** for management of network packet queues **540***a*-**540***n* to apply the indicated priorities. The agent **326** may communicate the priority of network packets to the filter **322** by any suitable means and/or mechanism such as via an application programming interface (API), such an IOCTL interface, or any other type and/or form of interface known to those ordinarily skilled in the art. In one embodiment, the filter **322** is not aware of the application **338***a*-**338***n* by name but can associate priorities to network packets of applications **338***a*-**338***n* via the routing table **538**. An application **338***a*-**338***n* corresponding to a network packet can be identified by any combination of source and destination identifiers, such as IP addresses and port numbers. As such, in some embodiments, the agent **326** indicates priorities to the filter **322** by routing information instead of application name. In other embodiments, the agent **326** provides to the filter **322***a* mapping between applications **338***a*-**338***n*, such as by application name or process id, to the routing information in a routing table **538**.

[**0192**] Based on the indicated priorities for applications **338***a*-**338***n*, in some embodiments, the filter **322** may place, arrange, or coordinate network packets into queues **540***a*-**540***n* in support of the priorities. In one embodiment, the filter **322** may move network packets from temporary queues **540***a*-**540***n* or from memory or other storage to a queue **540***a*-**540***n* associated with the application **338***a*-**338***n*, a queue **540***a*-**540***n* associated with a priority, or a queue **540***a*-**540***n* associated with both an application and a priority. For example, in one embodiment, all high priority network traffic may be placed in a high priority queue **540***a* and arranged in order based on an order of priority of the application **338***a*-**338***n*, such as real-time data applications **338***a*-**338***n* prior to other applications **338***a*-**338***n*. In some embodiments, the network packets may be arranged in order in a priority queue **540***a*-**540***n* based on the time the network packet was intercepted by the packet capture mechanism **365**, such as in a FIFO manner. In yet a further embodiment, one queue **540***a*-**540***n* may be used for prioritization by the filter **322**. Each network packet may be placed and arranged in a priority order respective to all other intercepted network packets to provide a packet by packet prioritization across all applications **338***a*-**338***n* and intercepted network packets. One ordinarily skilled in the art will recognize and appreciate that the network packets may be arranged in various priority queues **540***a*-**540***n*, such as high, medium, low, or by any other granularity, and be placed or arranged in the queue in any suitable manner in practicing the operations of the present invention described herein.

[**0193**] In one embodiment, all network packets for an application **338***a*-**338***n* are placed in a queue **540***a*-**540***n* associated with the application **540***a*-**540***n*. For example, intercepted network packets for an application communicating to a first destination IP address, and a first destination port may be placed in a first queue **540***a*. In another embodiment, all networks packets for a type of application **338***a*-**338***n*, such as an email or voice application, or all network packets for a type of protocol used by the application **338***a*-**338***n*, such as RTP or UDP, may be placed in a queue **540***a*-**540***n* for prioritizing networks packets for one or more applications. For example, online collaboration related applications **338***a*-**338***n* may be placed and prioritized in a first queue **540***a* for collaboration related applications. A second queue **540***b* may be used for email related applications **338***a*-**338***n*. In another example, a queue **540***a* may be used for applications **338***a*-**338***n* communicating real-time data or communicating using the RTP and/or UDP protocol. In a further example, a queue **540***a* may be used for applications **38***a*-**338***n* communicating using a remote display protocol, such as ICA or RDP.

[**0194**] Within each application associated queue **540***a*-**540***n* organized by specific application **338***a*-**338***n*, type or category of application **338***a*-**338***n*, or by protocol, the

network packets may be further prioritized by the characteristic of the application **338***a*-**338***n* generating them, e.g., a foreground application, the size of the network packet, or the time the network packet was intercepted. In some embodiments, one or more queues **540***a*-**540***n* may be used for network packets intercepted but not prioritized because a policy **520** does not exist or apply to the network packet, or the policies **520** indicate to ignore or not process the network packet for prioritization. One ordinarily skilled in the art will recognize and appreciate the various ways network packets may be placed and arranged in a priority based manner in queues **540***a*-**540***n* associated with the application **338***a*-**338***n*, the type of application **338***a*-**338***n* or the protocol used by the application **338***a*-**338***n*, and that the priority may be based on the policies **520** specified for the client **105**.

[**0195**] At step **575** of illustrative method **550**, the network packets are communicated from the queues **540***a*-**540***n* according to the determined priorities for the network packets. In some embodiments, the network packets are organized into priority queues **540***a*-**540***b* so that the network packets of the highest priority queue **540***a*-**540***n* are communicated first, and then the next highest priority queue **540***a*-**540***n* second, and so on. In other embodiments, the queues **540***a*-**540***n* are organized by application **338***a*-**338***n*, and therefore, at step **575**, the present invention communicates network packets from the queue **540***a*-**540***n* based on the respective priorities of the applications **338***a*-**338***n*. Regardless of the queue **540***a*-**540***n* organization and management, one ordinarily skilled in the art will recognize and appreciate that the remote access client of the present invention will communicate the network packets from the queues in a manner according to or consistent with the determined priorities, which in turn, may be based or derived from the policies **520** of the client.

[**0196**] In some embodiments, the remote access client **120** of the present invention considers other network factors in determining what network packets to communicate from what queue. For example, the remote access client **120** may receive an indication of network congestion, such as receiving a window size of zero for a TCP connection related to an application **338***a*-**338***n*. In another example, the remote access client **120** may recognize a high number of retransmits to a particular destination. As such, in some embodiments, the remote access client **120** may throttle back or not communicate network packets related to other networks factors, such as congestion, even though the network packets may have a higher priority than other network packets in a queue **540***a*-**540***n*. Thus, the client **105** controls and manages the prioritization of network communications of the client **105** on an application **338***a*-**338***n* basis and in accordance with any policies **520** for the client **105** and in further view of any network statistics and other factors occurring on the network.

[**0197**] In yet a further aspect and referring now to **FIGS. 6A and 6B**, the present invention is related to providing a network disruption shielding technique for persistent and reliable connectivity. **FIG. 6A** illustrates environment **300** as discussed above in conjunction with **FIG. 3A**. The environment **300** illustrates network stacks **310***a* and **310***b*, which may represent network stacks of computing devices **102***a*-**120***b* or gateway **340**, such as any of the computing devices **102** and the gateway **340** illustrated in **FIGS. 1A-1C**, **2A**, or **5A**. Each network stack **310***a*-**310***b* may comprise one or more networks layers, such as a TCP/IP network layer on top of the frame network layer as one ordinarily skilled in the art will recognize and appreciate. Although the network stacks **310***a*-**310***b* are illustrated in environment **300** of **FIG. 6A** with a certain set of network layers, one ordinarily skilled in the art will recognize and appreciate that the network stacks **310***a*-**310***b* may have any type and/or form of network layers, in any suitable combination, and each of the network stacks **310***a*-**310***b* may have different forms of each layer in relation to the other network stack.

[**0198**] The network stacks **310***a*-**310***b* may be considered to have a first portion **605***a*-**605***b* of the network stack, and a second portion **610***a*-**610***b* of the network stack. As illustrated in the example network stacks **310***a*-**310***b* of **FIG. 6A**, the first portion **605***a*-**605***b* of the network stack comprises the network layers at and below the TCP network layer. The second portion **610***a*-**610***b* may comprise those network layers above the TCP network layer, such as a UDP over SSL protocol layer. Although the first portion **605***a*-**605***b* and the second portion **610***a*-**610***b* are shown as portioned, segmented, or otherwise divided at the TCP layer, the first portion and second portion may be formed at a higher or lower dividing layer in practicing the network disruption shielding technique of the present invention as one ordinarily skilled in the art will recognize and appreciate.

[**0199**] The network stacks **310***a*-**310***b* illustrated in **FIG. 6A** may represent an application **338***a*-**338***n* on client **105**, such as the client depicted in **FIG. 5A**, establishing a peer-to-peer SSL VPN connection to a second computing device **102***b* or, alternatively, a gateway **340**. The client **105** may be a mobile client, such as a notebook, personal digital assistant (PDA), a smart phone, or any type of mobile computing or telecommunication device. The client **105** may communicate real-time data such as VoIP communication via the UDP protocol or RTP over UDP via the SSL session established to the peer device **102***b* or gateway **340**. In one embodiment, the agent **326** of the remote access client **120** establishes and maintains the SSL or SSL VPN session to the gateway **340** or to peer computing device **102***b*. The agent **326** may operate in user-mode **332**, and may handle any network layer and protocol processing related to the second portion **610***a*-**610***b* of the network stack **310***a*-**310***b*, along with any application layer protocols. As a TCP/IP based network **104**, the UDP over SSL session of the second portion **610***a*-**610***b* of the network stack **310***a*-**310***b* may be communicated over a TCP/IP stack forming the first portion **605***a*-**605***b* of the network stack **310***a*-**310***b*. In view of the remote access client **120** of the present invention, such as illustrated in **FIG. 1A** or **5A**, the filter **322** may be a network driver operating in kernel-mode **332** within the first portion **605***a*-**605***b* of the network stack **310***a*-**310***b*.

[**0200**] The present invention uses a network disruption shielding technique as depicted by illustrative method **650** in **FIG. 6B** to maintain the second portion **610***a*-**610***b* of the network stack **310***a*-**310***b* through a network level connection interruption, such as any type and/or form of network disruption to the first portion **605***a*-**605***b* of the network stack **310***a*-**310***b*. The network disruption shielding technique of the present invention may be performed transparently to an application **338***a*-**338***n* of the client **105**, a user of the client **105**, any one or more network layers above the first

portion **605***a*-**605***b*, and the gateway **340** or peer computing device **102***b*, and any portion of their respective network stacks **310***a*-**310***b*. In one embodiment, the network disruption is shielded without notification to the user of the client that the network was disrupted or a session was interrupted.

[**0201**] In brief overview of illustrative method **650**, at step **665**, a client **105** establishes a session via at least a first protocol over a network connection between the client and another device, such as a peer computing device or gateway. As such, a network stack **310***a*-**310***b* is established or used on the client **105**. The network stack **310***a*-**310***b* has a first portion **605***a*-**605***b* and a second portion **610***a*-**610***b*. At step **660**, a disruption in the network connection is detected causing the first portion **605***a*-**605***b* of the network stack **310***a*-**310***b* to be disestablished, or otherwise disrupted from being used or continued to be used. At step **665**, the present invention maintains the second portion **610***a*-**610***b* of the network stack **310***a*-**310***b* during the disruption and maintaining a session, or sessions, associated with the network layers of the second portion **610***a*-**610***b*.

[**0202**] During the disruption, at step **670**, any network packets related to the second portion **610***a*-**610***b* of the network stack **310***a*-**310***b* may be queued. At step **675**, the first portion **605***a*-**605***b* of the network stack **310***a*-**301***b* is reestablished or otherwise received from the network disruption. While the first portion **605***a*-**605***b* of the network stack **310***a*-**301***b* is reestablished, the present invention maintains the second portion **610***a*-**610***b*, and sessions thereof, allowing at step **680**, to continue with the session by linking or re-associating the second portion **610***a*-**610***b* with the first portion **605***a*-**605***b* of the network stack **310***a*-**310***b*. The network connection and/or the session may automatically be re-authenticated at step **680**. At step **685**, the illustrative method may communicate any queued network packets and continue with the session transparently as if the network disruption did not occur.

[**0203**] In an embodiment of illustrative step **655**, a first computing device **102***a* may establish a network connection with a second device, such as a peer computing device **102***b* or a gateway **340**, by any suitable means and/or mechanism and using any type and/or form of connection based protocol. For example, the network connection may be established via a TCP connection on a TCP/IP network or by an SPX connection on an IPX/SPX network. In some embodiments, the network connection may be initiated by any of the applications **338***a*-**338***n* on the client, such as any application illustrated in **FIG. 5A**. For example, a remote display client, such as an ICA client of Citrix Systems, Inc. or a Remote Display Client of Microsoft Corporation may initiate or establish the network connection. In other embodiments, the network connection of illustrative step **665** may be initiated and/or established via the agent **326**, filter **322**, or any other portion of the remote access client **120**. In one embodiment, the establishing of the network connection forms the first portion **605***a*-**605***b* of the network stack **310***a*-**310***b*. In other embodiments, the first portion **605***a*-**605***b* of the network stack **310***a*-**310***b*, or portion thereof, is established via connection to a network **104** upon startup of the client **105**.

[**0204**] In some embodiments, the second portion **610***a*-**610***b* of the network stack **310***a*-**310***b* is formed by establishing one more sessions, such as an SSL session, via any type and/or form of protocol over the network connection, such as a remote display protocol of ICA or RDP. The session may be established via any application **338***a*-**338***n* or the remote access client **120** of the client. In one embodiment, the session may correspond to a tunneling or gateway session with a peer computing device **102***b* or a gateway **340**. In another embodiment, the session may be any type of interactive session such as a media session established via a signaling protocol, SIP for example. For example, the session of the second portion **610***a*-**610***b* of the network stack **310***a*-**310***b* may comprise a VoIP communication session, such as one established by illustrative method **260** of **FIG. 2B**. Additionally, there may be multiple sessions associated with the second portion **610***a*-**610***b* of the network stack **310***a*-**310***b*. For example, an SSL or SSL VPN session may form one session, while a second session, such as media session via RTP over UDP may form a second session. Additionally, at any application layer of the network stack **310***a*-**310***b* one or more applications **338***a*-**338***n* on the client **105** may establish an application level session with a peer computing device **102***b*. In one embodiment, the agent **326** of the remote access client **120** is responsible for establishing and maintaining the second portion **610***a*-**610***b* of the network stack **310***a*-**310***b* and one or more of the associated sessions.

[**0205**] At step **660** of the illustrative method **650** of the present invention, a disruption is network connection is detected. In one embodiment, the network disruption may be caused by a mobile client **105** roaming between networks and networks segments, which, in some embodiments, causes the client **105** to obtain a new network IP address and/or host name. In some embodiments, the disruption disrupts the first portion **605***a*-**605***b* of the network stack **310***a*-**310***b*, such as, for example, causing a TCP or SPX connection to be disconnected. In one aspect, the disruption causes the first portion **605***a*-**605***b*, or any portion thereof, of the network stack **310***a*-**310***b* to be disestablished, or otherwise needing to be re-established, reconnected, reconfigured or rebuilt. For example, in some embodiments, the IP layer of the network stack may maintain intact while the TCP layer is reestablished. In one embodiment, any TCP related drivers may need to be re-started. In other embodiments, the TCP/IP layer be intact even though the network connection is disrupted, and only a new TCP connection needs to be established. In other embodiments, the TCP/IP layer is intact but needs to reconfigure itself for a new network or network segment, such as changing the IP address of the client **105**. One ordinarily skilled in the art will recognize and appreciate the various ways a network connection may be disrupted and impact or affect a first portion of the network stack.

[**0206**] In some embodiments, the agent **326**, or any other portion of the remote access client **120** may detect the network disruption by any suitable means and/or mechanisms. In one embodiment, the agent **326** may determine a network disruption by receiving an error message or failure upon calling or executing an API call to the first portion **605***a*-**605***b* of the network stack **310***a*-**310***b*. For example, the SSL session maintained by the agent **326** for the second portion **610***a*-**610***b* relies or depends on the TCP connection of the first portion **605***a*-**605***b* of the network stack **310***a*-**310***b*. As the agent **326** transacts via the SSL session, the agent **326** may receive an error or failure message indicating a problem with the TCP connection. In other embodiments,

the agent **326** may receive an event or message from any network layer of the first portion **605***a*-**605***b* of the network stack **310***a*-**310***b* indicating a network disruption. One ordinarily skilled in the art will recognize and appreciate the various ways the network disruption may be detected.

[**0207**] At illustrative step **665**, in some embodiments, upon detection of the network disruption, the agent **326** or any other portion of the remote access client **120** of the present invention maintains the second portion **610***a*-**601***b* of the network stack **310***a*-**310***b* during the disruption. For example, although the SSL based session maintained by the agent **326** depends on an underlying TCP connection, the agent **326** keeps the SSL session open or active through the disruption to the TCP connection. As there may multiple sessions associated with one or more layers of the second portion **610***a*-**610***b* of the network stack, the agent **326**, in some embodiments, keeps one or more, or all, of the multiple sessions open or active although the first portion **605***a*-**605***b* of the network stack **310***a*-**310***b* is disrupted.

[**0208**] At step **670** of illustrative method **650**, the remote access client **120** of the present invention, in some embodiments, queues one or more network packets of any of the protocols related to the second portion **610***a*-**610***b* of the network stack **310***a*-**310***b* during the network disruption. The remote access client **120** may use any type and/or form of queuing mechanisms, such as any of the queues **540***a*-**540***n* illustrated in **FIG. 5A**. In other embodiments, the remote access client **120** may discard network packets during the disruption, such any packets related to a lossy protocol, such as RTP over UDP for voice communications. In some cases, it may be desirable to discard packets, such as UDP packets, to reduce latency and quality issues, such as in voice communications. In further embodiments, the remote access client **120** may queue some network packets and discard other network packets. In an additional embodiment, the remote access client **120** may queue the network packets, and discard some or all of the network packets after a predetermined period of time. The remote access client **120** may use the policies **520** to determine which network packets to queue and/or discard. For example, a network packet of a first application **338***a* may be queued while a network packet of a second application **338***n* is discarded. In other embodiments, the remote access client **120** may use any network statistics or any network traffic inspection techniques, for example stateful inspection, as known to those skilled in the art to determine whether to queue and/or discard network packets during the disruption.

[**0209**] At step **675** of illustrative method **650**, the first portion **605***a*-**605***b* of the network stack **310***a*-**310***b* is reestablished while the second portion **610***a*-**610***b* of the network stack **310***a*-**310***b* is maintained along with maintaining any desired session or sessions of the second portion **610***a*-**610***b* of the network stack **310***a*-**310***b*. The first portion **605***a*-**605***b* of the network stack **310***a*-**310***b* may be reestablished by any suitable means and/or mechanisms. For example, the client **105** may reestablish the TCP/IP connection to the network **104**, such as by logging into a new network for a roaming mobile client **105**. In other embodiments, the remote access client **120**, such as via the agent **326** or the filter **322**, reestablishes the first portion **605***a*-**605***b* of the network stack **310***a*-**310***b*. For example, the agent **326** may initiate and establish a new TCP connection. Upon reestablishing the first portion **605***a*-**605***b*, the second portion **610***a*-**610***b* of the network stack **310***a*-**310***b* is linked with, re-associated with or starts to use or continue to use the first portion **605***a*-**605***b* to reestablish the network stack **310***a*-**310***b*. In some embodiments, the agent **326** may be notified by an event of any network layer that the first portion **605***a*-**605***b* has been reestablished or in other embodiments, may poll by any predetermined frequency to determine the first portion **605***a*-**605***b* is reestablished. For example, the agent **326** may check if the TCP connection is active or can be reconnected.

[**0210**] In some embodiments, at step **680**, the remote access client **120**, such as the agent **326**, may automatically re-authenticate the client **105** or a user of the client **105** for the network connection, such as a TCP connection for the first portion **605***a*-**605***b* of the network stack **610***a*-**610***b*. For example, the remote access client **120** may automatically re-authenticate the client **105** to a network **104** using any network related credentials of a user of the client **105**. Additionally, the remote access client **120** may automatically re-authenticate the client **105** or a user of the client **105** for any session associated with the second portion **610***a*-**610***b* of the network stack **310***a*-**310***b*. For example, the SSL session between the agent **326** and the gateway **340** or peer computing device **102***c* may be re-authenticated.

[**0211**] In another example, an application **338***a* may be accessing a host service, web server, or application server that uses authentication credentials for access. The agent **326** may automatically re-authenticate the application **338***a* to the corresponding service or server using application related authentication credentials. In some embodiments, the remote access client **120** may re-authenticate the client and/or user of the client **105** at multiple levels, such as for network access and/or TCP connection, SSL or SSL VPN session, and/or any application level sessions, such as a media interactive user session, for example, a VoIP telephone session. Furthermore, the remote access client **120** may re-authenticate at any time prior to step **685**, during step **685**, for example, after communicating queued network packets but before continuing other communications, or after step **865**, in response to a request to authenticate from a peer computing device, such as a server or the gateway **340**.

[**0212**] At step **685** of illustrative method **650**, the remote access client **120** of the present invention continues to use the session or sessions of the second portion **610***a*-**610***b* of the network stack. If any network packets have been queued or remain queued at step **670**, the remote access client **120** communicates the queued network packets and continues communicating any network packets of the client **105**, such as network packets generated by or sent to the one more applications **338***a*-**338***n* of the client **105**. As such, the network disruption shielding technique of the present invention provides a seamless and transparent solution to nomadic mobile computing solutions and for generally providing reliable and persistent network connectivity and access.

[**0213**] In the example of a VoIP communications, the illustrative method **650** of the present invention will reduce the number of telephone call drops due to network disruptions and improve the usage of and experience with VoIP. A VoIP user will not need to reconnect the telephone call due to temporary network disruptions in network availability as the remote access client **120** of the present invention will automatically maintain the session and reconnect to the

network. Additionally, the remote access client **120** of the present invention will automatically re-authenticate the connection and sessions for providing security after the network disruption. Furthermore, the network shielding technique of the present invention is useful for 1) continuing transactions, commands, or operations automatically through the network disruption, 2) maintaining session related context and cache through the network disruption, and 3) automatically handling change in network address of the client due to changes in the network.

[**0214**] By providing a reliable and persistent connection, the present invention also avoids interruptions to transactions, commands or operations as part of the functionality exercised between the a first computing device **102***a* and a second computing device **102***b*, such as client **105***a* and **105***b* in **FIG. 1C**. For example, a file copy operation using Windows Explorer has not been designed to continue working after there is a disruption in a network connection. A user on the client **105** may use the file copy feature of Windows Explorer to copy a file from the client **105** to a server **102***c*. Because of the size of the file or files, this operation may take a relatively extended period of time to complete. If during the middle of the operation of the copy of the file to the server, there is an interruption in the network connection between the client **105** and the server, the file copy will fail. Once the network connection is re-established, the user will need to start another file copy operation from Windows Explorer to copy the file from the client **105** to the server. Under the present invention, the user would not need to start another file copy operation. The network connection would be re-established in accordance with the network disruption shielding technique of the present invention as illustrated in **FIG. 6B**. As such, the file copy of Windows Explorer would not get notified of the interruption in the network connection and therefore, would not fail. The remote access client **120** would re-establish any connections and transmits any queued data so that operation can continue without failure. The remote access client **120** would maintain a queue of the data related to the file copy operations that has not been transferred to the server because of the interruption in the network connection. Once the network connection is re-established, the remote access client **120** can transmit the queued data and then continue on with transferring the data related to the file copy operation in due course.

[**0215**] Although this aspect of the invention is described in terms of a file copy operation example, one ordinarily skilled in the art will recognize that any operation, transaction, command, function call, etc. transacted between a first computing device **102***a* and a second computing device **102***b*, can be maintained and continued without failure from the network connection disruption, and, furthermore, without the client **105** or user of the client **105** recognizing there was a disruption or having notice of the disruption. Additionally, the transaction or operation can be maintained and continued transparently to the application **338**, the gateway **340**, second computing device **102***c*, and any part of the second portion **610***a*-**610***b* of the network stack **310***a*-**310***b*.

[**0216**] By providing the client **105** with a reliable and persistent connection to a peer computing device **102***b* or gateway **340**, the present invention avoids the process of opening a new user session with an application **338** on the peer, such as a host service on server, by maintaining the user session through network connection interruptions. For each user session between peer computing device, each computing device may maintain session specific context and caches, and other application specific mechanisms related to that instance of the user session. For each new user session established, these session specific context and caches need to be re-populated or re-established to reflect the new user session. For example, a user on the client **105** may have an http session with a server **102***c* having a web server or web application. The server **102***c* may keep context specific to providing this instance of the http session with the client **105**. The context may be stored in the memory of the server, in files of the server, a database or other component related to providing the functionality of the server **102***c*. Also, the client **105** may have local context specific to the instance of the http session, such as a mechanism for keeping track of an outstanding request to the web server. This context may be stored in memory of the client **105**, in files on the client **105**, or other software component interfaced with the client **105**. If the connection between the client **105** and the server **102***c* is not persistent, then a new user session needs to be established with new session specific context on the server **102***c* and the client **105**. The present invention maintains the session so that a new session, and therefore new specific session context, does not need to be re-established.

[**0217**] The present invention maintains the user session through network level connection interruptions and without notification to the user of the client that the session was interrupted. In operation of this aspect of the invention, the client **105** establishes the connection to the peer computing devices. Via the connection, a session between the client **105** and the server is established. The remote access client **120** can store and maintain any session related information such as authentication credentials, and client **105** and host server **102***c* context for the established session. Upon detection of a disruption in network connection, the remote access client **120** can re-establish the first portion **605***a*-**605***b* of the network stack **310***a*-**301***b* while maintaining the second portion **610***a*-**610***b* of the network stack. The network connection disruption may cause an interruption to the underlying TCP/IP connection used by the session between the client **105** and the server **102***c*. However, since the second portion **610***a*-**610***b* of the network stack **310***a*-**310***b* is maintained, the session can be re-established and/or continued after the network connection is re-established without the user on the client **105** having notification that the session was interrupted. Thus, the interruption of the session caused by the network connection disruption is effectively hidden from the user using the network disruption shielding techniques of the present invention.

[**0218**] Furthermore, by providing a reliable and persistent connection, the present invention also enables a client **105** to traverse through different network topologies without restarting a session or an application **338** on the client **105**. For example, the client **105** may be a computer notebook with a wireless network connection. As the client **105** moves from a first wireless network to a second wireless network, the client's network connection may be temporarily disrupted from the first wireless network as a network connection is established with the second wireless network. The second wireless network may assign a new network identifier, such as a host name or internet protocol address, to the client **105**. This new network identifier may be different than the network identifier assigned to the client **105** by the first wireless network. In another example, the client **105** may be

physically connected through an Ethernet cable to a port on the network. The physical connection may be unplugged and the client **105** moved to another location to plug into a different port on the network. This would cause a disruption into the network connection and possibly a change in the assigned network identifier. Without the present invention, any sessions between peer computing devices may need to be restarted due to the change in the network topology, the disruption to the network connection, and/or the change in the assigned network identifier. By the method and systems described herein, the remote access client **120** of the present invention maintains the network connection for the client and automatically re-established the client's **105** network connection including handling changes in the network topology and network identifier. The client **105**, and any applications or sessions on the client **105**, can continue to operate as if there was not a network connection disruption or a change in the network identifier. Furthermore, the user on the client **105** may not recognize there were any interruptions or changes, and the client **105** may not receive any notice of such interruptions.

[**0219**] In an additional aspect, any of the techniques of the present invention, such as the illustrative methods of **FIGS. 2B, 3B**, **3**C, **4**, **5**B and **6**B, can be practiced in one or more combinations with each other. In one embodiment, the peer-to-peer routing technique may be practiced with the false acknowledgement and/or MTU adjustment techniques. This would provide a client communicating real-time data, such as VoIP, to connect to the peer via a more optimal and direct route and to communicate the real-time data via UDP over a secure SSL/TCP/IP connection, while avoiding any latency due to any reliability mechanism of TCP and reduce fragmentation due to the encryption overhead. Additionally, this embodiment may be further combined with the client-side application-aware prioritization technique and/or the network disruption shielding technique. As such, the secure real-time data communications can be communicated from the client at higher priorities than other applications of the client to improve the quality of the real-time experience, such as VoIP. The network disruption technique would allow a mobile VoIP phone, such as a soft phone of a notebook, roam between network access points and automatically continue with the session.

[**0220**] The techniques of the present invention are complimentary to each other for network communication optimizations, such as for example in VoIP communications over a SSL VPN gateway. As such, each of the 1) peer-to-peer routing technique, 2) the false acknowledgement technique, 3) payload shifting technique, 4) the MTU adjustment technique, 5) the client-side application-aware technique, and 5) the network disruption shielding technique of the present invention may be practiced with one or more of the following techniques and optimization of the present invention: 1) the peer-to-peer routing technique, 2) the false acknowledgement technique, 3) payload shifting technique, 4) the MTU adjustment technique, 5) the client-side application-aware technique, and/or 5) the network disruption shielding technique.

[**0221**] In one further illustrative example of the present invention, an online meeting, collaboration and/or desktop sharing service, such as the hosted service of GoToMeeting.com, WebEx.com, or LiveMeeting.com may use the techniques of the present invention in one or more combinations. The host service may use a gateway **340**, and the techniques of illustrative method **260** to facilitate a peer-to-peer connection between a first computing device of a meeting presenter and a second computing device of a meeting attendee. The computing devices of the meeting presenter and attendees may download via the host service the remote access client **120**, or any portions thereof. Once the meeting presenter and the meeting attendee establish a peer-to-peer connection, the peer computing devices may use any of the optimization techniques of the present invention to optimize their communications, such as the MTU adjustment technique, client-side application aware technique, or the network disruption shielding technique. Along with the peer-to-peer routing, the optimization techniques of the present invention, will improve the performance, efficiency and user experience of the online meeting, collaboration, or desktop sharing.

[**0222**] In yet a further aspect and in view of **FIG. 2A**, for example, the remote access client **120** of the present invention can distribute Dynamic Host Configuration Protocol (DHCP) IP addresses of the client **105** or the publicly visible IP addresses to the telecommunication device **210***a*-**210***b*, such as either a hardware or software based VoIP telephone. The gateway **340** of the present invention facilitates the discovery of the public IP addresses of the client, such as client **105***b* illustrated in **FIG. 2A**. As such, the techniques of the present invention enables protocols that communicate their IP address over the protocol to continue to function.

[**0223**] Many alterations and modifications may be made by those having ordinary skill in the art without departing from the spirit and scope of the invention. Therefore, it must be expressly understood that the illustrated embodiments have been shown only for the purposes of example and should not be taken as limiting the invention, which is defined by the following claims. These claims are to be read as including what they set forth literally and also those equivalent elements which are insubstantially different, even though not identical in other respects to what is shown and described in the above illustrations.

We claim:

1. A method for shielding from a network disruption a session established via a first protocol, the method comprising the steps of:

(a) establishing, via an agent of a client, a session via a first protocol over a network connection between the client and a device, the network connection associated with a network stack, a first portion of the network stack comprises one or more layers of the network stack below the layer of the first protocol, and a second portion of the network stack comprises a layer for the first protocol and one or more layers of the network stack above the first protocol;

(b) detecting a disruption in the network connection causing the first portion of the network stack to be disestablished;

(c) maintaining, by the agent, the session and the second portion of the network stack during the disruption; and

(d) re-establishing the second portion of the network stack and the network connection while maintaining the session and the second portion of the network stack.

2. The method of claim 1, comprising the step of:

(e) continuing the session with the maintained second portion of the network stack and the re-established first portion of the network stack.

3. The method of claim 1, comprising the step of

(e) dropping, by the second portion of the network stack, any network packets received during the disruption.

4. The method of claim 1, wherein the device comprises one of a remote access gateway or a computing device.

5. The method of claim 1, further comprising establishing the session via the first protocol of one of the following: secure socket layer (SSL) protocol, a transport layer security (TLS) protocol, and a tunneling protocol.

6. The method of claim 1, comprising communicating, by the agent, real-time data via the session between the client and the device.

7. The method of claim 6, wherein the real-time data comprises a real-time protocol.

8. The method of claim 6, wherein the real-time data comprises a representation of one of voice or audio.

9. The method of claim 1, comprising operating the agent in user-mode of an operating system of the client.

10. The method of claim 1, wherein the first portion of the network comprises one of a transport control protocol or an internet protocol.

11. The method of claim 1, wherein the second portion of the network stack comprises one of an internet protocol, a user datagram protocol, or a voice over internet protocol.

12. The method of claim 1, comprising the client communicating with the device via a remote display protocol.

13. The method of claim 12, wherein the remote display protocol comprises one of an Independent Computing Architecture protocol or a Remote Desktop protocol.

14. The method of claim 1, comprising performing one of steps (b), (c) and (d) transparently to an application of the client communicating via the network connection.

15. The method of claim 1, comprising intercepting, by the agent, transparently to an application of the client one or more network packets associated with the application.

16. The method of claim 1, comprising intercepting, by a network driver associated with the second portion of the stack, transparently to the application on the client one or more network packets associated with the application.

17. A system for shielding from a network disruption a session established via a first protocol, the system comprising

an agent of a client establishing a session between the client and a device over a network connection via a first protocol;

a network stack having a first portion and a second portion, the first portion of the network stack comprising one or more layers of the network stack below the layer of the first protocol, and the second portion of the network stack comprising a layer for the first protocol and one or more layers of the network stack above the first protocol; and

a detector for detecting a disruption in the network connection causing the second portion of the network stack to be disestablished;

wherein:

upon detection of the disruption by the detector, the agent maintains the session and the second portion of the network stack during the disruption; and

the client re-establishes the first portion of the network stack and the network connection while the agent maintains the session and the second portion of the network stack.

18. The system of claim 17, wherein the agent continues the session with the maintained second portion of the network stack and the re-established first portion of the network stack.

19. The system of claim 17, wherein one of the first portion or the second portion of the network stack drops any network packets received during the disruption.

20. The system of claim 17, wherein the device comprises one of a remote access gateway or a computing device.

21. The system of claim 17, wherein the first protocol comprises one of the following: secure socket layer (SSL) protocol, a transport layer security (TLS) protocol, and a tunneling protocol.

22. The system of claim 17, wherein the agent communicates real-time data via the session between the client and the device.

23. The system of claim 22, wherein the real-time data comprises one of a real-time protocol.

24. The system of claim 22, wherein the real-time data comprises a representation of one of voice or audio.

25. The system of claim 17, wherein the agent operates in user-mode of an operating system of the client.

26. The system of claim 17, wherein the first portion of the network stack comprises one of a transport control protocol or an internet protocol.

27. The system of claim 17, wherein the second portion of the network stack comprises one of an internet protocol, a user datagram protocol, or a voice over internet protocol.

28. The system of claim 17, wherein the first protocol comprises a remote display protocol.

29. The system of claim 28, wherein the remote display protocol comprises one of an Independent Computing Architecture protocol or a Remote Desktop protocol.

30. The system of claim 17, wherein the agent intercepts one or more network packets of an application of the client transparently to the application.

31. The system of claim 17, comprising a network driver associated with the second portion of the network stack, the network driver intercepts one or more network packets of an application of the client transparently to the application, and provides the one or more packets to the agent to communicate via the session.

32. The system of claim 31, wherein the network driver comprises a Network Driver Interface Specification (NDIS) driver.

33. The system of claim 31, wherein the network driver operates in kernel-mode of an operating system of the client.

* * * * *