US 20070133515A1

(19) United States

(12) Patent Application Publication

(10) Pub. No.: US 2007/0133515 A1

(43) Pub. Date: Jun. 14, 2007

Kumar et al.

(54) CENTRAL ENTITY TO ADJUST REDUNDANCY AND ERROR CORRECTION ON RTP SESSIONS

(76) Inventors: **Rajesh Kumar**, Palo Alto, CA (US); **Mohamed S. Mostafa**, Emeral Hills, CA (US)

Correspondence Address:
MARGER JOHNSON & MCCOLLOM, P.C.
210 SW MORRISON STREET, SUITE 400
PORTLAND, OR 97204 (US)

(21) Appl. No.: 11/300,010

(22) Filed: Dec. 13, 2005

Publication Classification

(51) Int. Cl.
H04L 12/66 (2006.01)

(52) U.S. Cl. 370/352

(57) ABSTRACT

An example embodiment may include an apparatus comprising a message buffer to receive messages from a voice over packet endpoint if impairments in a media stream pass a threshold, and a processor coupled with the message buffer, the processor to determine changes to media characteristics for the voice over packet endpoint in relation to the impairments and to signal the voice over packet endpoints to adjust media characteristics of the media stream in both directions. Another example embodiment may be a method comprising monitoring a voice over packet media stream for impairments, computing Voice over packet quality metrics based on the impairments, sending or receiving the Voice over packet quality metrics to or from a session peer, when a threshold is crossed for the Voice over packet quality metrics, sending an event notification to a central entity, and changing media characteristics of the voice over packet media stream in relation to the impairments as directed by the central entity.

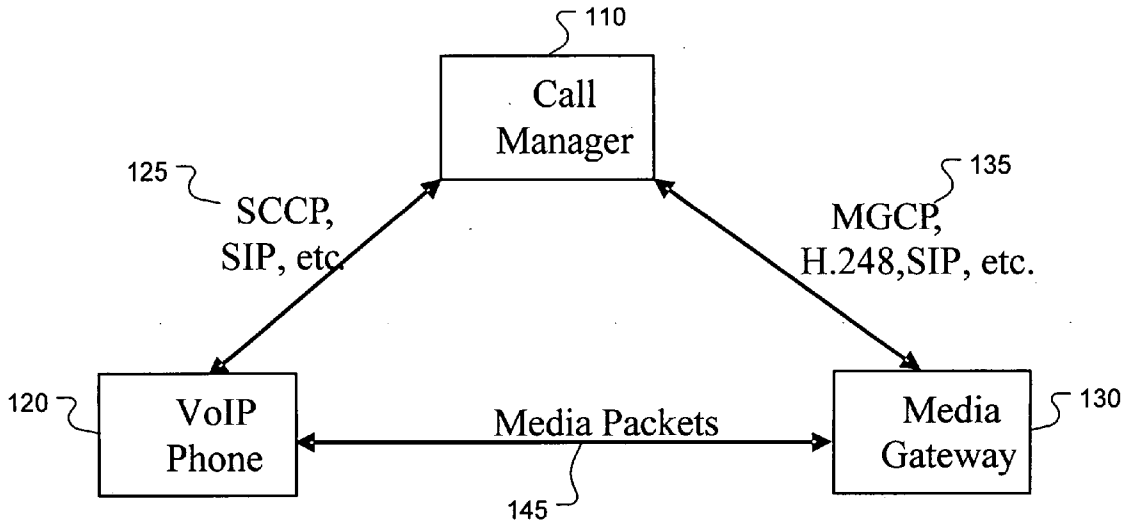

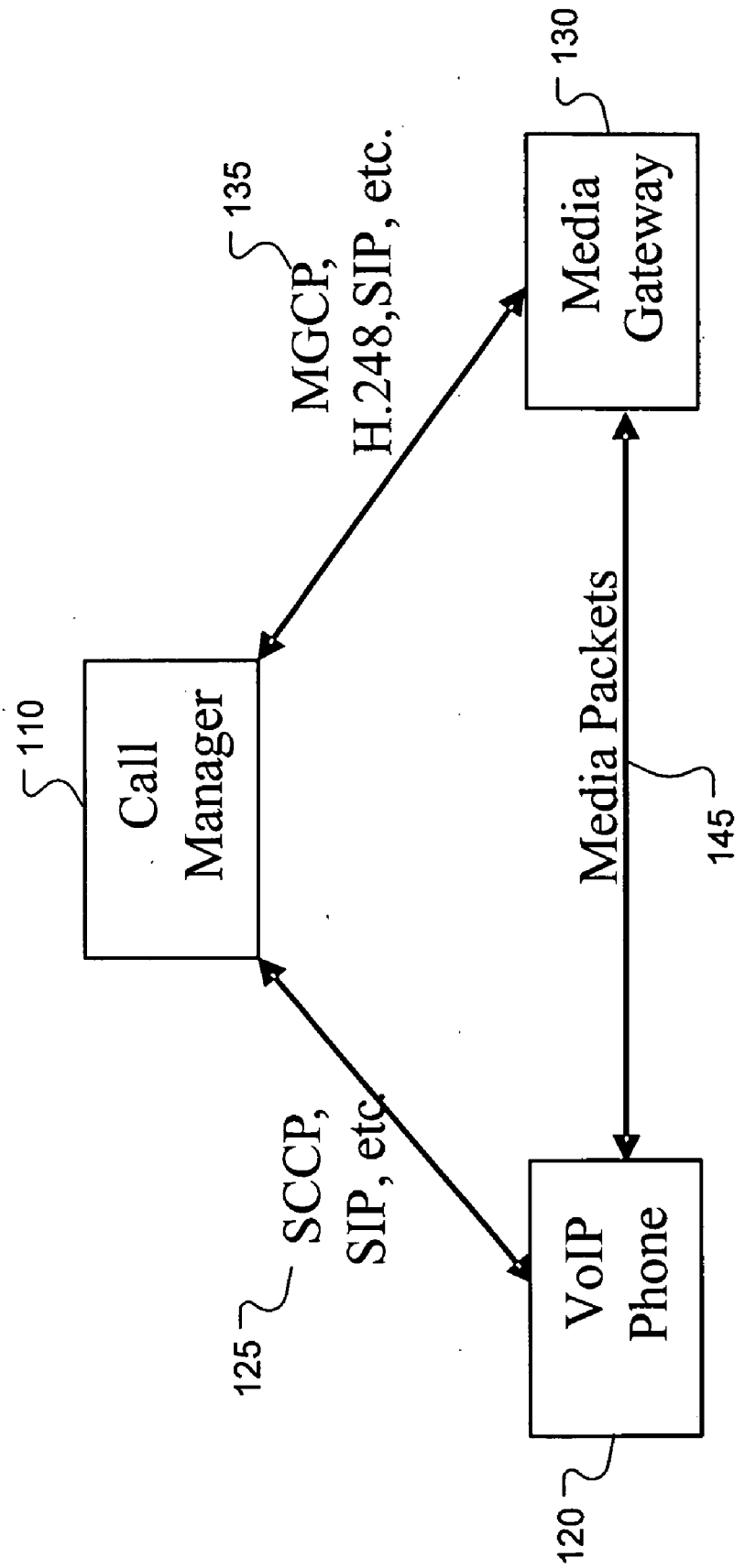
110
Call Manager
135
MGCP, H.248,SIP, etc.
130
Media Gateway
Media Packets
145
125
SCCP, SIP, etc
120
VoIP Phone

FIG. 1

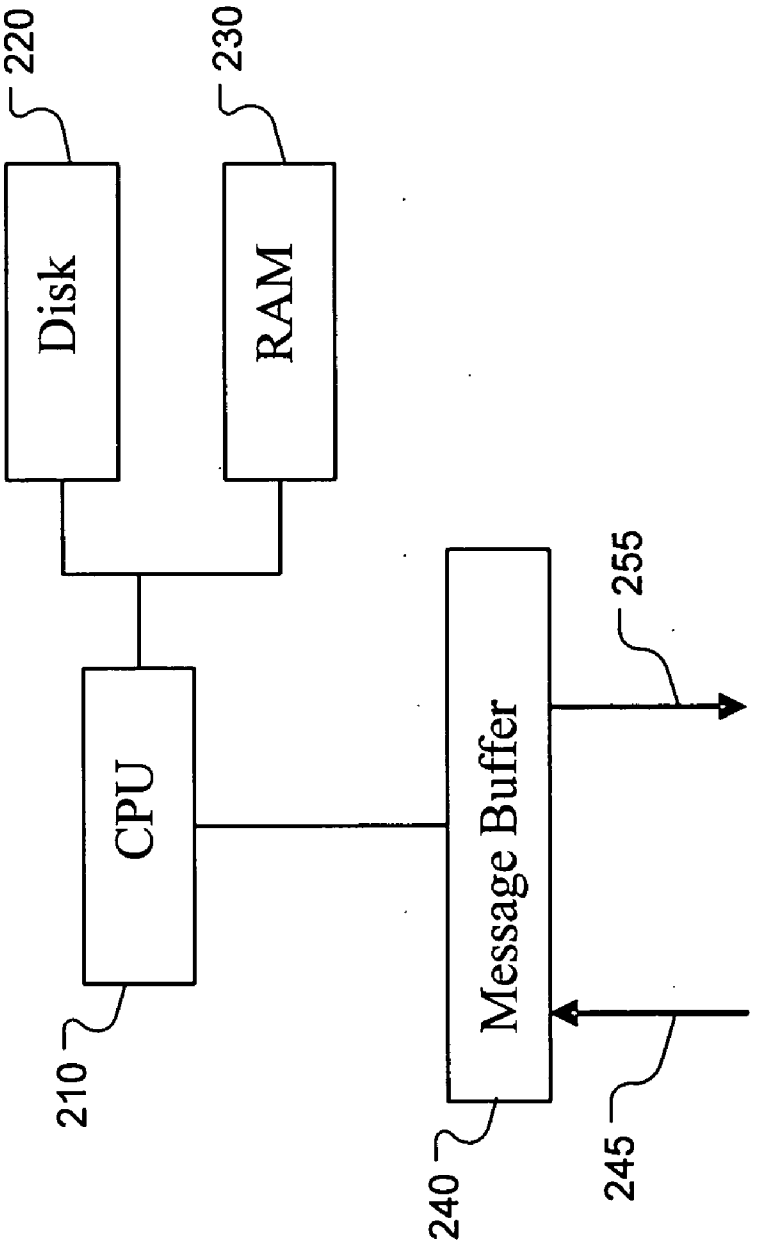

FIG. 2

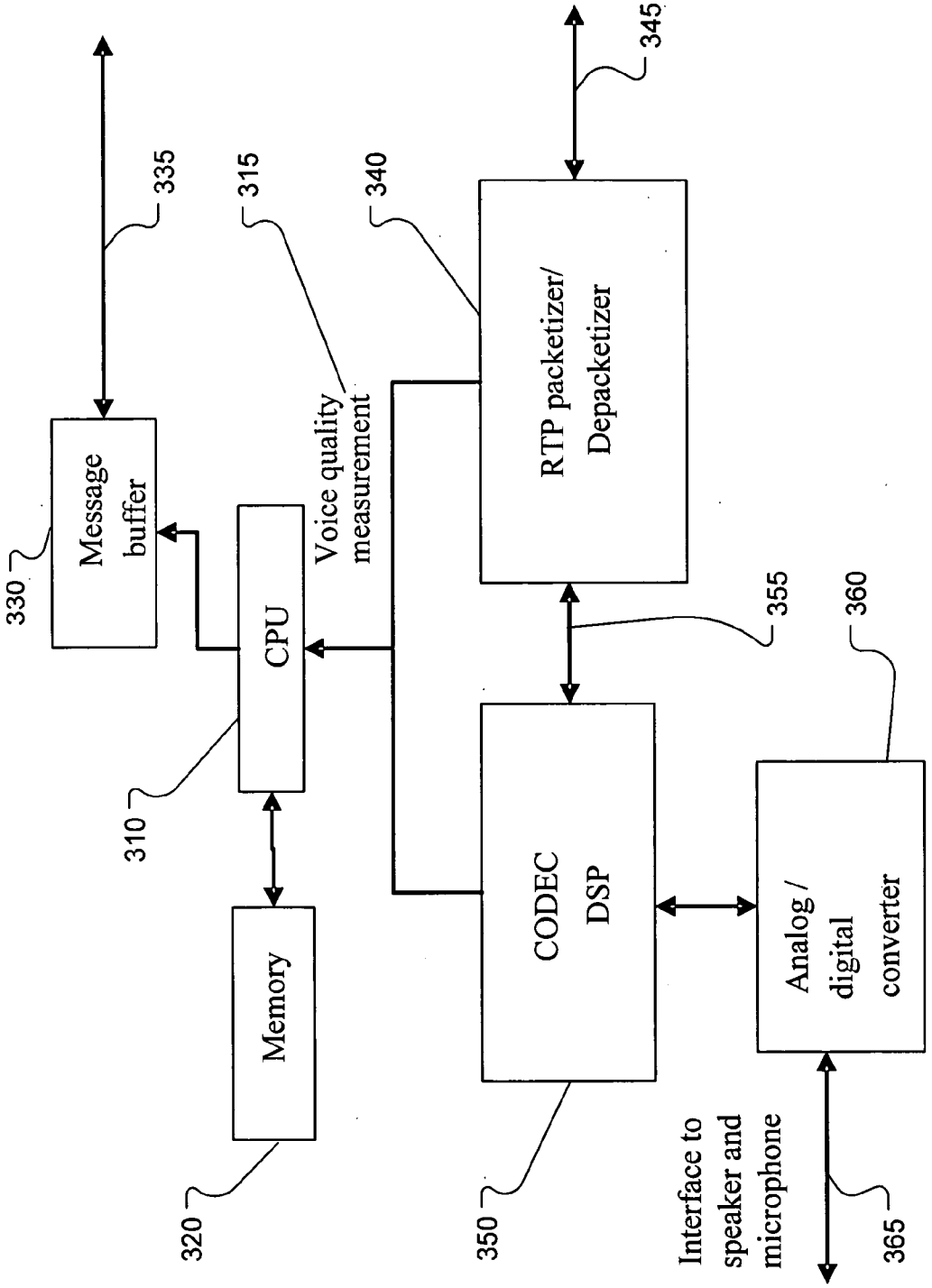
Message buffer
330
335
CPU
310
Memory
320
Voice quality measurement
315
RTP packetizer/ Depacketizer
340
345
CODEC DSP
350
355
Analog / digital converter
360
Interface to speaker and microphone
365

FIG. 3

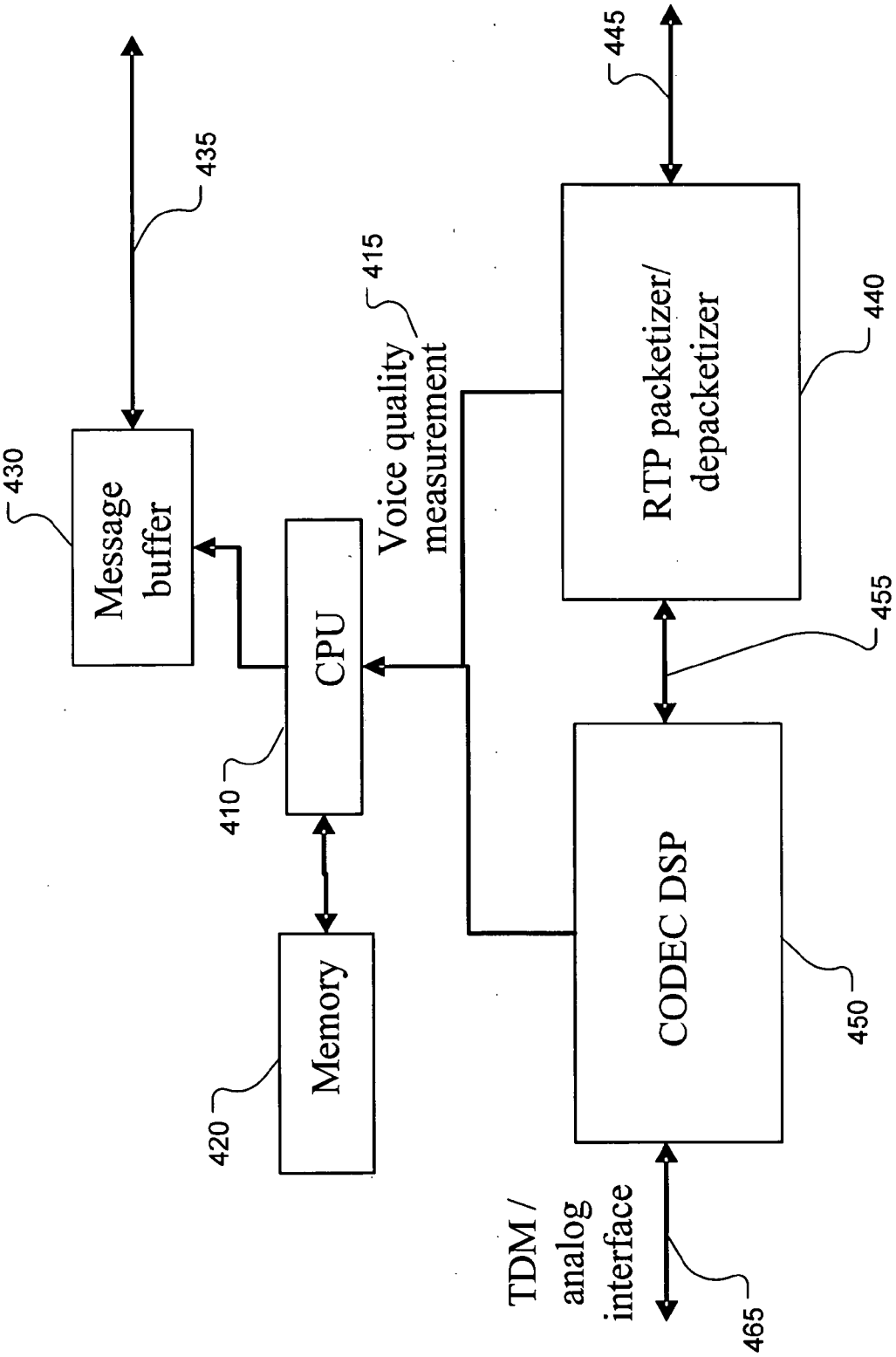
Message buffer
430
435
CPU
410
Memory
420
Voice quality measurement
415
RTP packetizer/ depacketizer
440
445
455
CODEC DSP
450
TDM / analog interface
465

FIG. 4

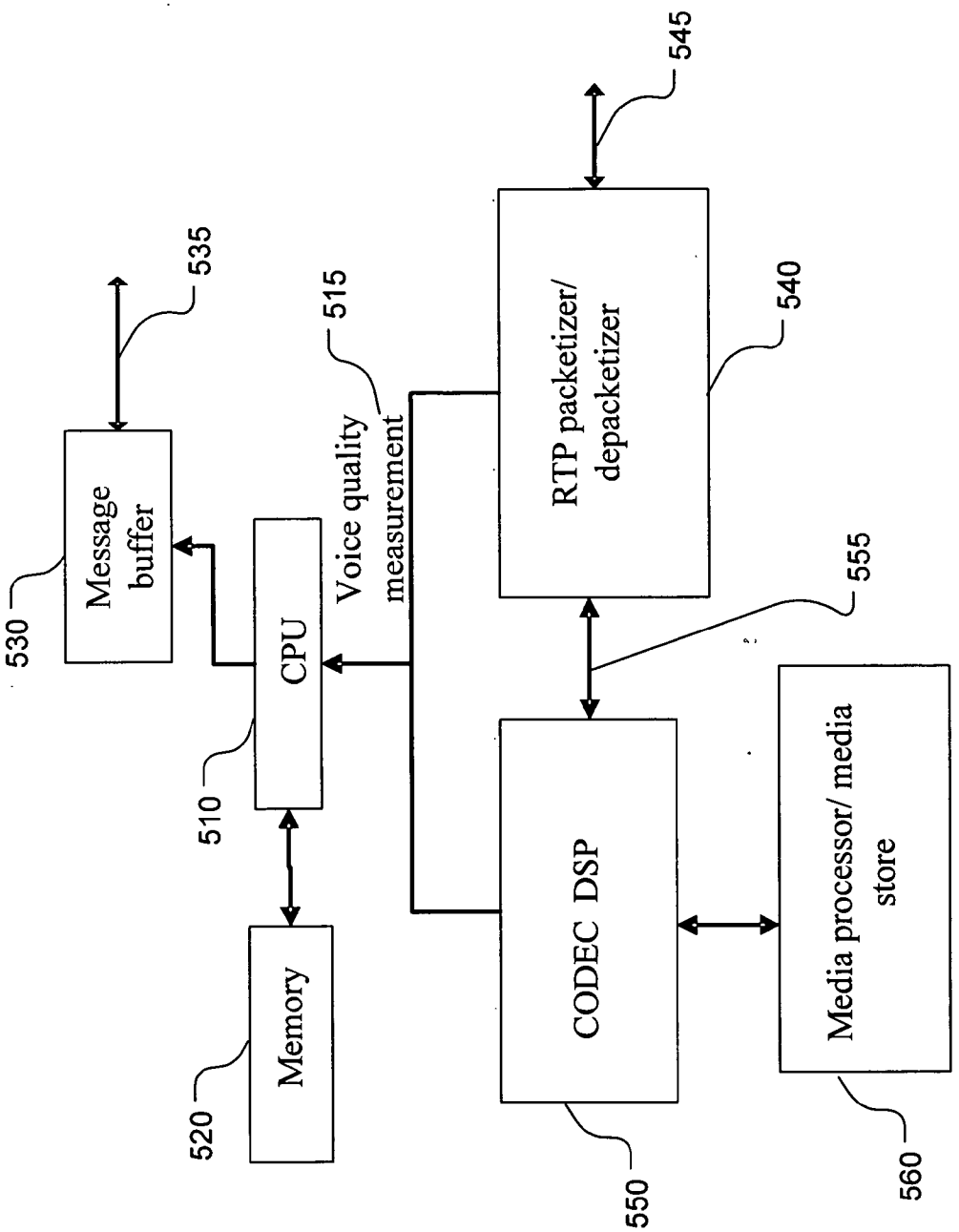
Message buffer
530
535
CPU
510
Memory
520
Voice quality measurement
515
RTP packetizer/ depacketizer
540
545
CODEC DSP
550
555
Media processor/ media store
560

FIG. 5

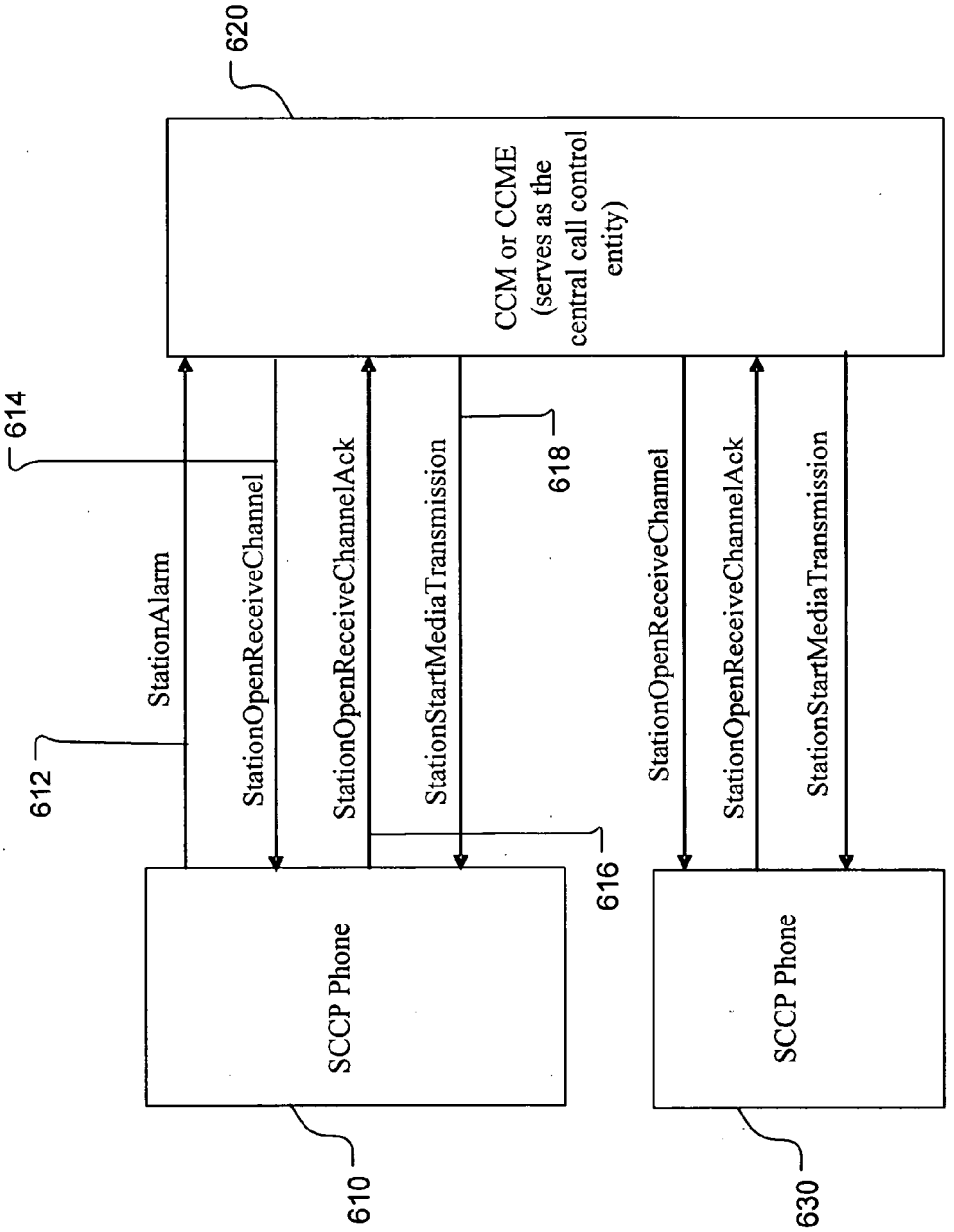
620
CCM or CCME (serves as the central call control entity)
614
612
StationAlarm
StationOpenReceiveChannel
StationOpenReceiveChannelAck
StationStartMediaTransmission
618
616
StationOpenReceiveChannel
StationOpenReceiveChannelAck
StationStartMediaTransmission
SCCP Phone
SCCP Phone
610
630

FIG. 6

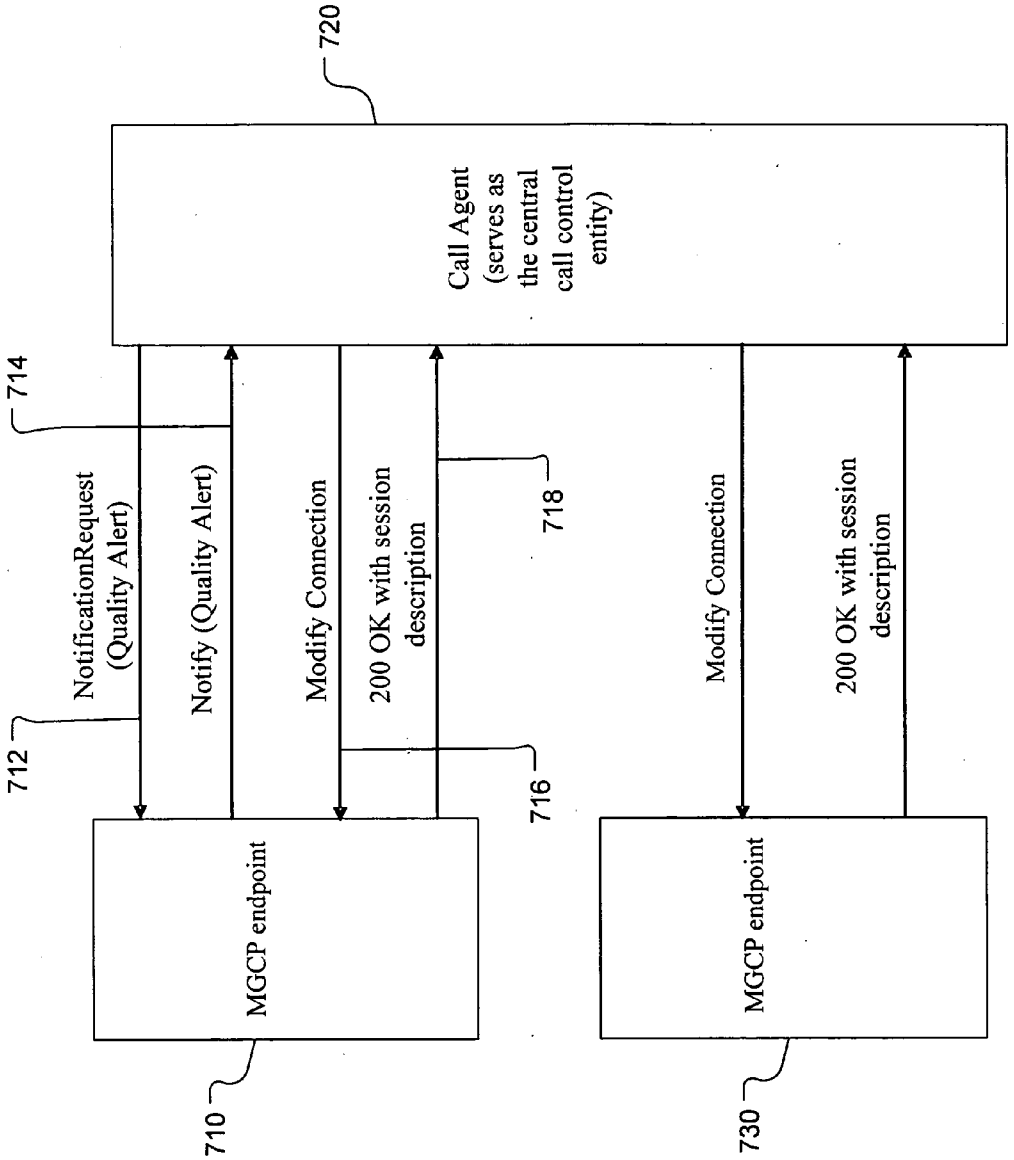
720
Call Agent (serves as the central call control entity)
714
NotificationRequest (Quality Alert)
Notify (Quality Alert)
Modify Connection
200 OK with session description
718
712
716
MGCP endpoint
710
Modify Connection
200 OK with session description
MGCP endpoint
730

FIG. 7

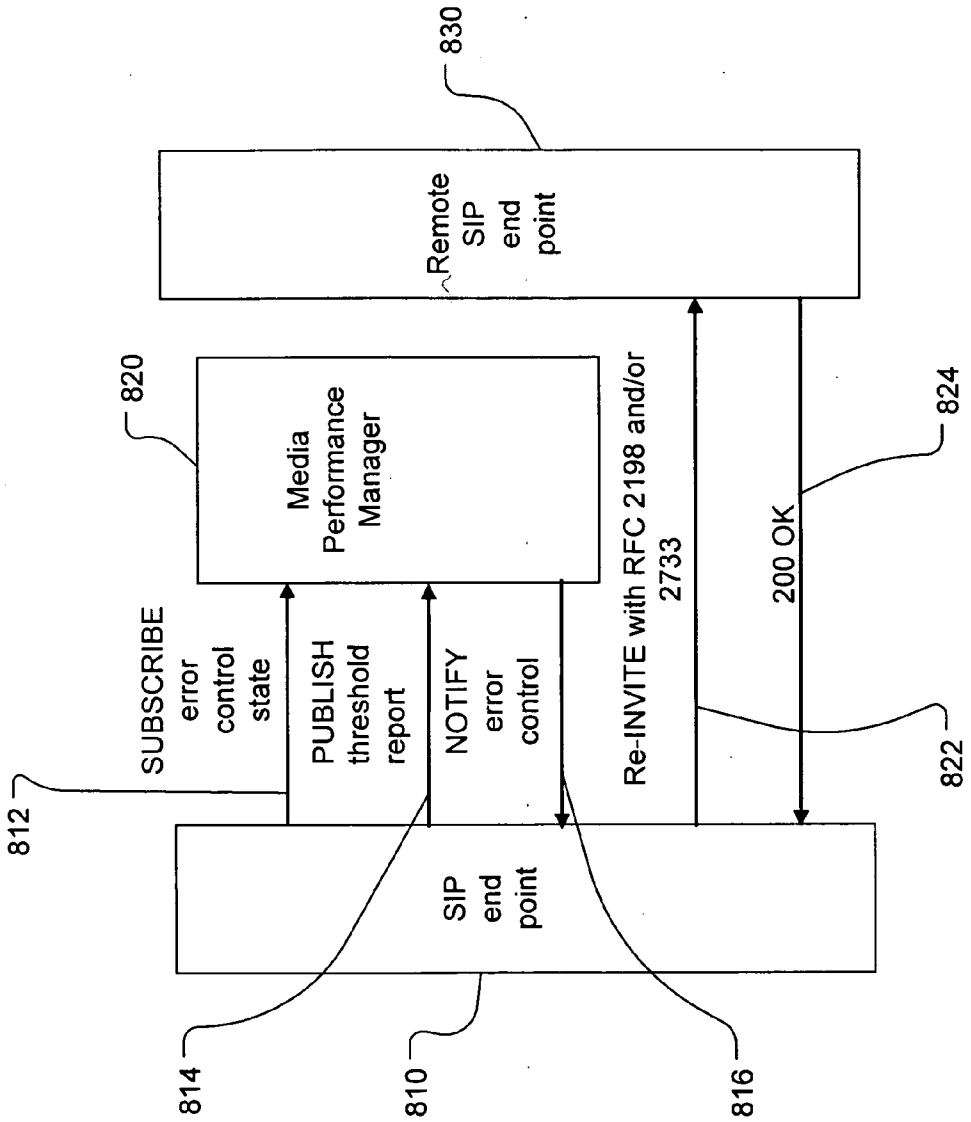
830
Remote SIP end point
820
Media Performance Manager
SUBSCRIBE error control state
PUBLISH threshold report
NOTIFY error control
Re-INVITE with RFC 2198 and/or 2733
200 OK
824
822
812
SIP end point
814
810
816

FIG. 8

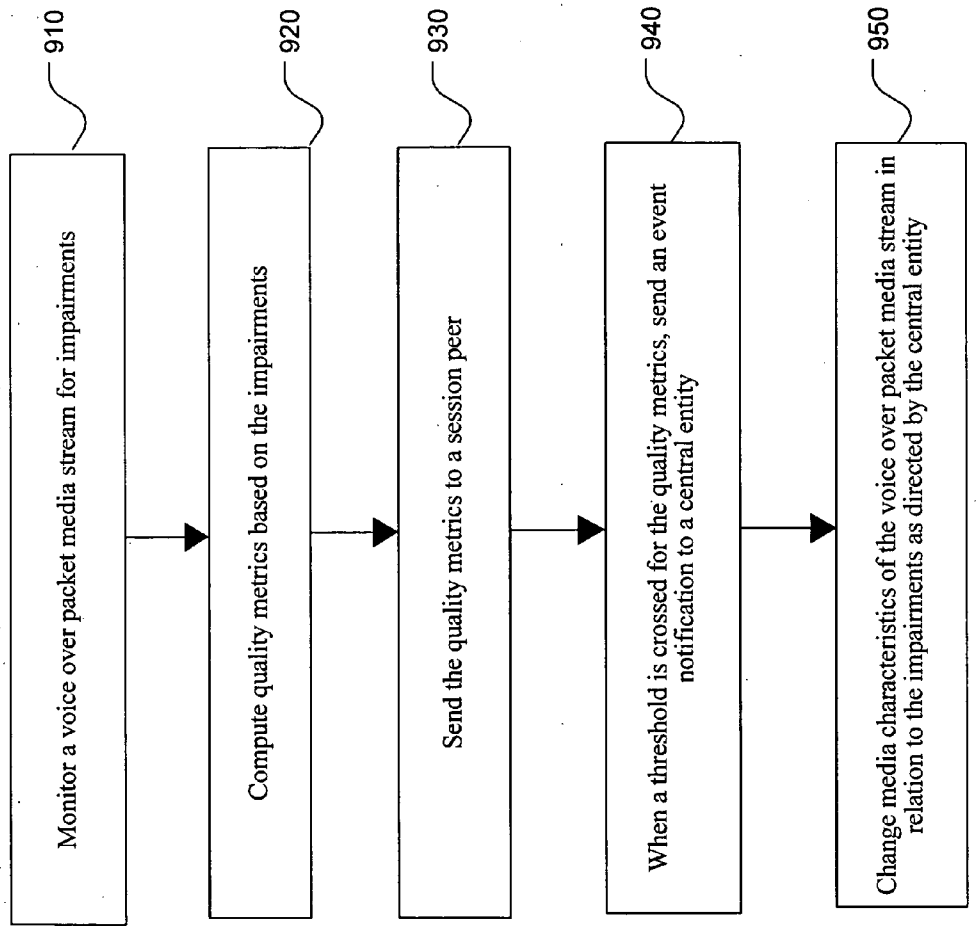
910
Monitor a voice over packet media stream for impairments
920
Compute quality metrics based on the impairments
930
Send the quality metrics to a session peer
940
When a threshold is crossed for the quality metrics, send an event notification to a central entity
950
Change media characteristics of the voice over packet media stream in relation to the impairments as directed by the central entity

FIG. 9

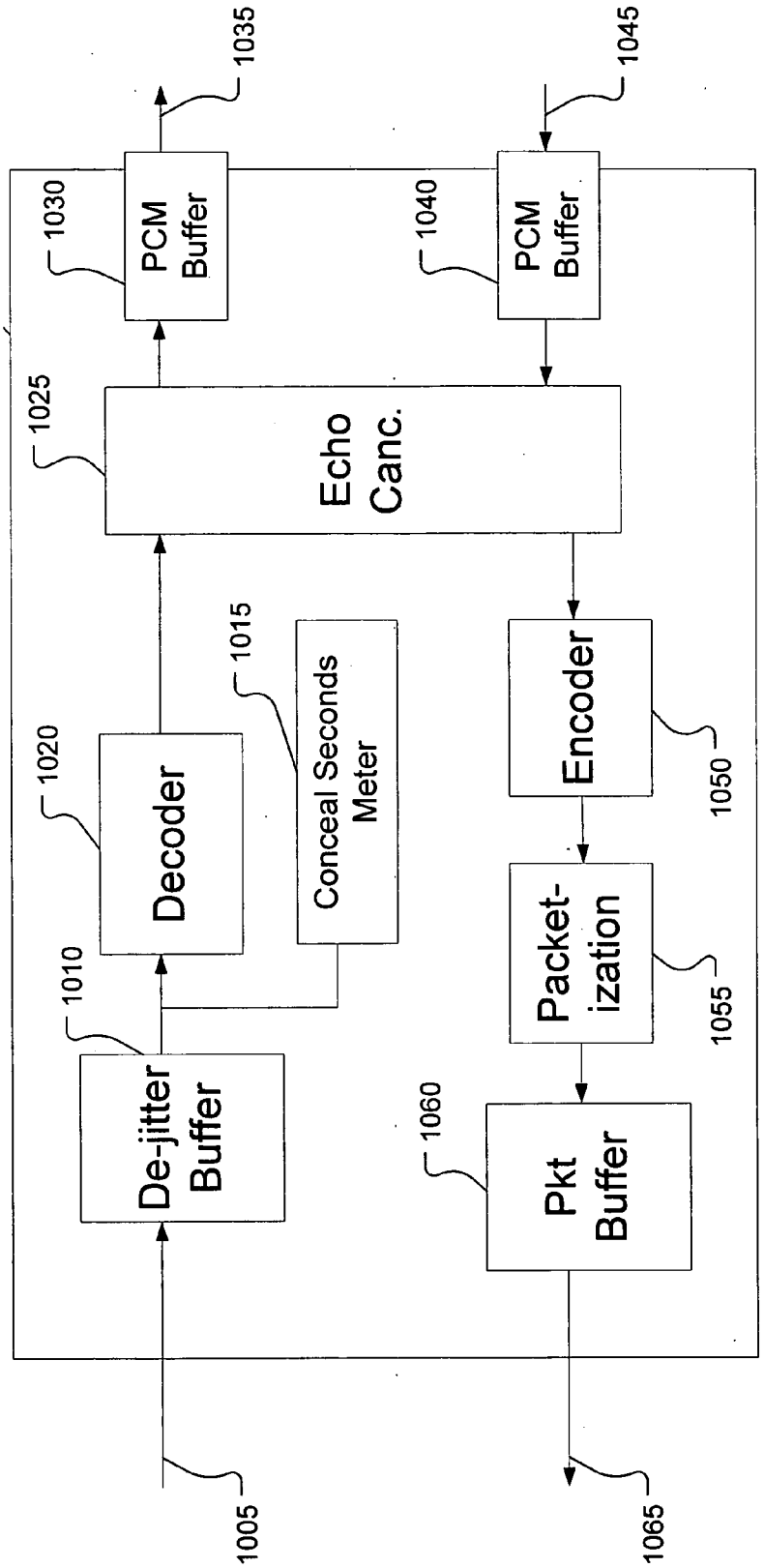
1035
1045
1030
PCM Buffer
1040
PCM Buffer
1025
Echo Canc.
1015
Conceal Seconds Meter
1020
Decoder
Encoder
1050
1010
De-jitter Buffer
Packet-ization
1055
1060
Pkt Buffer
1005
1065

FIG. 10

CENTRAL ENTITY TO ADJUST REDUNDANCY AND ERROR CORRECTION ON RTP SESSIONS

BACKGROUND

[0001] Conventional telephone conversations take place over a circuit switched network. A circuit-switched network involves a dedicated physical path for a single connection between two end-points for the duration of the connection. In the Public Switched Telephone Network (PSTN), a telephone service provider dedicates a physical path between two end-points to a called number for the duration of a call.

[0002] In contrast to circuit switched networks, packet switched networks can be used to transmit telephone calls without requiring a dedicated connection, which leads to reduced costs. Packet switched networks typically use protocols to divide messages or data into packets. Division into packets allows each packet to be transmitted individually. In most packet switched networks, packets are allowed to follow different routes to a destination. After the packets arrive at the destination, they can be recompiled into the original message. An example packet switched network is the global computing network often referred to as the Internet.

[0003] Example packet switched networks may use Transmission Control Protocol/Internet Protocol (TCP/IP), X.25, and Frame Relay protocols. In contrast to circuit switched networks that were conventionally used for real-time communications, packet switching allows for delays in transmission, and provides extra control such as retransmission of data, recognition of duplicate messages, flow control mechanisms, etc. In general, packet switched networks provide a robust system for information transfer. Additionally, packet switched networks provide a low cost solution for information transfer since it does not require dedicated leased paths between endpoints.

[0004] Improvements in communications and computing technologies allow conventional real-time applications over a packet switched network. For example, in a voice over Internet Protocol (VoIP) network, audio phone information is converted from analog to digital format and sent through a packet switched network. This allows for delivery of audio information at a much lower monetary cost than through a dedicated PSTN circuit, however it has an associated cost in the quality of the communication.

[0005] The fundamental transport mechanism for voice-over-packet telecommunication systems is data packets, which are generated at a transmitter and sent at regular, short intervals to a receiver. A standard voice quality impairment is 'packet loss' in which packets from a transmitter do not arrive as expected at the receiver. Impairments may be any degradation in strength, value, quality, etc., of a media stream.

[0006] Packet loss is widely understood to be a primary source of voice quality degradation due to transmission network impairment. Voice-over-packet equipment often uses packet counts for voice quality metrics, such as 'packets received', 'packets lost', 'late packets', 'early packets' etc. Various other means have been employed to measure voice quality in telecommunications networks. For linear systems, objective audio measurements such as frequency response and signal-to-noise ratios are typical. To estimate user experience, subjective test methodologies such as ACR (absolute category ranking) are employed. MOS (mean-opinion-scores) is an example of an ACR test, in which users are presented with audio material and make listening judgments about quality on a five-point scale (1-bad, to 5-excellent).

[0007] Conventional Voice-over-packet (VOP) systems may use other quality metric methodologies. MOS tests are non-real-time experiments involving human listeners, and are not run directly on revenue-generating calls, although predictions of MOS scores can be made. The use of non-linear, low-bit-rate audio codecs such as an International Telecommunication Union (ITU) standard G.729 means that some traditional measurements of audio quality such as frequency response are not used since linear methods do not characterize a non-linear system.

[0008] Packet redundancy and forward error correction (FEC) can be used to compensate for random and bursty packet loss, but these approaches have limitations in real time applications such as VoIP in a real time transport protocol (RTP) environment. Application of packet redundancy or FEC to all VoIP calls consumes valuable bandwidth, particularly when neither packet redundancy or FEC is required. This may also contribute to congestion and therefore increase loss, jitter, delay, reduce MOS scores, etc., if applied in a distributed manner to sessions (more than a certain number) with impaired media streams. The number of sessions that packet redundancy or FEC may be applied is limited by available bandwidth, which is limited in many scenarios. Low-bit-rate audio codecs (coder/decoders) and digital signal processing (DSP) techniques may also be employed to conserve bandwidth in voice communications, but may degrade the quality of a voice signal.

[0009] "Adaptive FEC-Based Error Control for Internet Telephony", by Bolot, Fosse-Parisis and Towsley, 1999, discusses an adaptive spacing of packets to maximize the probability of packet reception and determination of encoding rates to maximize the quality of a transfer subject to a rate constraint.

[0010] The Bolot, Fosse-Parisis and Towsley approach aims to optimize a subjective measure as opposed to an objective measure of quality. However this approach does not provide for a centralized, coordinated adaptive assignment of packet redundancy or different levels of FEC to impaired calls. Additionally, this approach does not provide for throttling redundancy or FEC mechanisms once a critical impaired session volume is reached, such as a critical session volume correlating to network congestion. What is needed is a centralized entity to dynamically manage redundancy and error correction in relation to impairments.

SUMMARY

[0011] An example embodiment may be a system including a first voice over packet endpoint to send a media stream to a second voice over packet endpoint, the second voice over packet endpoint to monitor the media stream for impairments, and compute quality metrics based on the impairments and to detect when a threshold is crossed for the quality metrics, and a central entity to change media characteristics of the media stream in relation to the impairments in response to a detected threshold crossing of the quality

metrics. In some embodiments an endpoint may also compute threshold crossings for quality metrics that are received from a session peer.

[0012] Another example embodiment may be a method comprising monitoring a voice over packet media stream for impairments, computing quality metrics based on the impairments, sending the quality metrics to a session peer, when a threshold is crossed for the quality metrics, sending an event notification to a central entity, and changing media characteristics of the voice over packet media stream in relation to the impairments as directed by the central entity.

[0013] And yet another example embodiment may include a message buffer to receive messages from a voice over packet endpoint if impairments in a media stream pass a threshold, and a processor coupled with the message buffer, the processor to determine changes in media characteristics for the voice over packet endpoint in relation to the impairments and to signal the voice over packet endpoint to adjust media characteristics of the media stream.

BRIEF DESCRIPTION OF THE DRAWINGS

[0014] Embodiments of the invention may be best understood by reading the disclosure with reference to the drawings, wherein:

[0015] FIG. **1** illustrates an embodiment system that may provide a central entity to adjust redundancy and error correction on an RTP session.

[0016] FIG. **2** illustrates an embodiment central entity that may adjust redundancy and error correction on an RTP session.

[0017] FIG. **3** is a block diagram illustrating an embodiment VoIP telephone FIG. **4** is a block diagram illustrating an embodiment VoIP media gateway.

[0018] FIG. **5** is a block diagram illustrating an embodiment media server.

[0019] FIG. **6** illustrates an embodiment signaling exchange for Skinny Client Control Protocol (SCCP) messages.

[0020] FIG. **7** illustrates an embodiment signaling exchange for Media Gateway Control Protocol (MGCP) messages.

[0021] FIG. **8** illustrates an embodiment system with an SIP endpoint, a Media Performance Manager and a remote SIP endpoint.

[0022] FIG. **9** illustrates an embodiment method for a central entity to adjust redundancy and error correction on an RTP session.

[0023] FIG. **10** illustrates an embodiment endpoint that uses an objective measure to determine quality of VoIP data.

DETAILED DESCRIPTION

[0024] In the following description, numerous specific details are set forth. However, it is understood that embodiments of the inventions may be practiced without these specific details. In other instances, well-known circuits, structures, and techniques have not been shown in detail in order to not obscure the understanding of this description.

[0025] Reference in the specification to "one embodiment" or "an embodiment", etc., means that a particular feature, structure, or characteristic described in connection with the embodiment is included in at least one aspect of the invention. The appearances of the phrase "in one embodiment" in various places in the specification do not necessarily all refer to the same embodiment.

[0026] An embodiment may provide a central or a distributed feedback system for a Voice over Packet (VOP) media stream that triggers different levels of correction in response to threshold crossings for media impairments. VoIP embodiments are explained throughout this detailed description but embodiments may include VOP media streams generally, or any packet based real time media stream with similar functionality. RTP endpoints are a more general class of endpoints that includes VoIP endpoints, and the two terms are used interchangeably at times in this detailed description.

[0027] Some embodiments may use central or distributed call control. Call control may include the control and/or negotiation of redundancy or FEC as correction mechanisms. Additionally, embodiments may jointly control redundancy, FEC, etc. at the same time, but the disjunctive "or" is used for convenience to show it may be either approach while in fact a combined approach is also contemplated, taught and claimed in this disclosure.

[0028] FIG. **1** illustrates an embodiment system **100** that may provide a central entity to adjust redundancy and error correction on an RTP session. In the embodiment shown in FIG. **1**, the central entity is a call manager **110**. Call manager **110** is in communication with a VoIP phone **120** and a media gateway **130**.

[0029] In an example embodiment, RTP endpoints may monitor a media stream for impairments such as packet loss and compute quality metrics. Example metrics include MOS-listening quality (MOS-LQ), round-trip packet loss, frame loss, inter-arrival jitter, MOS-conversational quality (MOS-CQ), estimated metrics such as ITU G.107 R-factor, etc. In an embodiment, these metrics may be conveyed to a session peer via the internet engineering task force (IETF) real time control protocol (RTCP, RFC 3550) or IETF real time control protocol with extended reports (RTCP-XR, RFC 3611). An embodiment RTP endpoint may be a VoIP endpoint, which may be any node that originates or terminates a VoIP call. Examples are VoIP phones, VoIP softphones, VoIP media gateways, VoIP media servers, etc. Session peers may be any type of device that is in communication with an RTP endpoint with the media stream.

[0030] Referring to the embodiment in FIG. **1**, VoIP phone **120** communicates a media stream comprising media packets **145** with media gateway **130**. Embodiments are not limited to communicating the media packets **145** as shown in the figure, for example, another example embodiment may have any VoIP phones communicating media packets **145** or media gateways communicating media packets **145**. In the embodiment in FIG. **1**, VoIP phone **120** communicates with call manager **110** using Skinny Client Control Protocol (SCCP), Session Initiation Protocol (SIP) in RFC 3261, etc. **125**, but other signaling protocols may be used. Similarly, the embodiment illustrates the media gateway **130** communicating with the call manager **110** with Media Gateway Control Protocol (MGCP) in RFC 3435, H.248, etc. **135**, but other signaling methods may be used.

[0031] Referring to the embodiment shown in FIG. **1**, system **100** may include a first voice over packet endpoint such as VoIP phone **120** to send a media packets **145** to a second voice over packet endpoint such as media gateway **130**, and the second voice over packet endpoint may monitor the media stream for impairments, compute quality metrics based on the impairments and detect when a threshold is crossed for the quality metrics. In some embodiments an endpoint may also compute threshold crossings for quality metrics that are received from a session peer.

[0032] System **100** may further include a central entity such as call manager **110** to change media characteristics of the media stream in relation to the impairments in response to a detected threshold crossing of the quality metrics. In some embodiments a central entity may control VoIP endpoints through one of the following protocols: SCCP, MGCP, H.248.1, SIP, etc., as examples. Central coordination and throttling of corrective, consequent actions improves feedback control loop stability.

[0033] In some embodiments the central entity, for example call manager **110**, can throttle the changes in media characteristics of the media stream, in this example media packets **145**, in response to reaching a criticality threshold where media quality would be deteriorated by the media characteristics changes. This criticality threshold may be defined in terms of the number of currently active sessions that have redundancy or FEC associated with them. In this embodiment, one or more thresholds may be set for a quality metric. When a threshold is crossed at any of a group of session peers, an event notification may be sent to a central entity such as a call manager/agent, media performance manager, policy server, etc.

[0034] Embodiments may be useful for any similar types of treated calls where error control treatment such as redundancy under IETF RFC 2198 or FEC under IETF RFC 2733 are applied. Additionally, it should be taken into consideration in some embodiments that there is no guarantee that RFC 2198 or RFC 2733 will be used since one or both endpoints can reject a request by the central call control entity or a media performance manager to use RFC 2198 or RFC 2733. Such rejections are usually based on the unavailability of resources.

[0035] Some embodiments may use a distributed call control with no central call control entity and call control is distributed in endpoints. An example signaling protocol used in these embodiments is SIP. In a distributed call control embodiment, SIP may also be used between an endpoint and a media performance server.

[0036] On receiving a threshold crossing notification for a given metric, the centralized entity can change characteristics of the media stream to include or augment redundancy or different levels of FEC to match the nature and degree of impairment. The centralized entity can signal these changes to the VoIP endpoint via signaling protocols such as by MGCP, H.248.1, SCCP or SIP etc. The present embodiment uses either redundancy or FEC, but embodiments are not so limited, and may use a central entity to adjust any media characteristics in response to impairments and provide a more robust media stream.

[0037] In one embodiment, a central entity may determine changes in media characteristics, and also the bandwidth impact of these changes. In this embodiment, a central entity may be pre-configured with a criticality threshold, for example in terms of the number of sessions beyond which the use or increase of redundancy or FEC will cause congestion and actually deteriorate media quality. When this criticality threshold is reached, the embodiment can stop modifying the media characteristics in response to impairments.

[0038] In some embodiments, a centralized control entity or the media performance manager may tailor the level of redundancy or FEC to correspond to which metric experienced a threshold crossing. For example, some metrics may warrant more error control. Additionally, the present embodiments may tailor the level of redundancy or FEC to the severity of the threshold crossing. These embodiments are particularly suitable with multiple thresholds, for example below a first threshold a condition may be deemed critical while below a second threshold it may be deemed severe but not critical.

[0039] In some embodiments, the media characteristics may include at least one of redundancy under RFC 2198 or FEC under RFC 2733. In another embodiment, the call manager **110** may compute the bandwidth impacts of changes in media characteristics and determine whether additional bandwidth is available in the network. It may perform this computation in lieu of or in addition to comparing the number of active sessions with redundancy or FEC and comparing the result to a criticality threshold.

[0040] Example VoIP quality metrics for these embodiments include MOS-listening quality (MOS-LQ) and G.107 R-factor metrics. In some embodiments the VoIP phone **120** and the media gateway **130** may communicate the VoIP quality metrics with each other with Real-time Control Protocol Extended Reports (RTCP-XR). In some embodiments the VoIP quality metrics may be objective metrics such as concealed seconds or severely concealed seconds.

[0041] In some embodiments, the VoIP phone **120** and the media gateway **130** may communicate and can notify a central entity **110** of a VoIP quality metric threshold crossing with SCCP, MGCP, SIP or H.248, as examples.

[0042] FIG. **2** illustrates an embodiment central entity **200** to adjust redundancy and error correction on an RTP session. In one embodiment, the central entity **200** may be a central call control entity such as a call manager. In another example embodiment, the central entity **200** may be a media performance manager. Referring to FIG. **2**, the central entity **200** in the present embodiment includes a central processing unit (CPU) **210** coupled with memory such as disk **220** and RAM **230**. CPU **210** is further coupled with a message buffer **240**. In a Central Call Control Entity embodiment, message buffer **240** may receive MGCP, SCCP, H.248.1 or SIP signaling messages as shown at **245**, from a VoIP endpoint **120** or **135**, and may also send similar signaling messages to VoIP endpoints **120** or **135** as shown at **255**.

[0043] In an embodiment central entity **200**, a message buffer **240** may receive messages from a voice over packet endpoint **120** if impairments in a media stream pass a threshold, and a processor coupled with the message buffer **240**, such as CPU **210**, may signal the voice over packet endpoint **120** to adjust media characteristics in relation to the impairments. In an embodiment, the CPU **210** can throttle

the changes in media characteristics in response to reaching a criticality threshold where media quality would be deteriorated by the media characteristics changes.

[0044] Central entity **200** may have similarities to the embodiment system **100** in FIG. **1**. For example, the media characteristics may include at least one of redundancy under RFC 2198 or FEC under RFC 2733. In some embodiments CPU **210** can compute the bandwidth impacts of media characteristics changes. Example VoIP quality metrics for these embodiments include MOS-LQ and G.107 R-factor metrics. In some embodiments the VoIP quality metrics may be objective metrics such as concealed seconds or severely concealed seconds.

[0045] In another example embodiment, the central entity **200** may be a media performance manager. In this embodiment, messages may be received from an endpoint and sent to an endpoint from the message buffer **240** in similar fashion to the central call control entity above. In one example, the media performance manager may receive SIP PUBLISH messages for threshold reports, may receive SIP SUBSCRIBE messages for a subnet-wide media error control state, and may send SIP NOTIFY messages to an endpoint for error control.

[0046] FIG. **3** is a block diagram illustrating an embodiment VoIP end terminal **300**. An example VoIP end terminal is a VoIP phone, a softphone, etc. In some embodiments, VoIP end terminal **300** may comprise a CPU **310** coupled with a message buffer **330**. The message buffer **330** may send or receive signaling messages **335**, for example from a media performance manager. According to the present embodiment, CPU **310** is also coupled with a memory **320**. Referring to FIG. **3**, VoIP end terminal **300** may include a coder/decoder (CODEC) digital signal processor (DSP) **350** coupled with the CPU **310** as well as a RTP packetizer/depacketizer **340** coupled with CPU **310**. Example RTP packetizer/depacketizers **340** may be embodied in a DSP, a network processor, etc. In the present embodiment, the CODEC DSP **350** and the RTP packetizer/depacketizer **340** may be coupled by link **355**. The present embodiment illustrates dedicated DSPs, but other example embodiments may be network processors, software processors, etc. in lieu of DSPs.

[0047] In the embodiment illustrated in FIG. **3**, CODEC DSP **350** is also coupled with a digital/analog and analog/digital converter **360** that may interface to a speaker and microphone **365**. RTP packetizer/depacketizer **340** interfaces to an IP network at **345**.

[0048] In the present embodiment, VoIP end terminal **300** may monitor a voice over packet media stream **145** for impairments, compute VoIP quality metrics based on the impairments, send the VoIP quality metrics to a session peer, and when a threshold is crossed for the VoIP quality metrics send an event notification to a central entity **200**. In some embodiments an endpoint may also compute threshold crossings for VoIP quality metrics that are received from a session peer. For example, VoIP quality metrics, or any voice quality measurements **315** may be sent to CPU **310**, and when a threshold is crossed, VoIP end terminal **300** may notify a central entity **200**. VoIP end terminal **300** may be used in system **100** or otherwise as directed in this disclosure.

[0049] FIG. **4** is a block diagram illustrating an embodiment VoIP media gateway **400**. In some embodiments, VoIP media gateway **400** may comprise a CPU **410** coupled with a message buffer **430**. The message buffer **430** may send or receive signaling messages **435**, for example from a media performance manager. According to the present embodiment, CPU **410** is also coupled with a memory **420**. Referring to FIG. **4**, VoIP media gateway **400** may include a CODEC DSP **450** coupled with the CPU **410** as well as a RTP packetizer/depacketizer **440** coupled with CPU **410**. In the present embodiment, the CODEC DSP **450** and the RTP packetizer/depacketizer **440** may be coupled by link **455**. The present embodiment illustrates dedicated DSPs, but embodiments need not be so limited.

[0050] In the embodiment illustrated in FIG. **4**, CODEC DSP **450** is also coupled with a TDM/analog interface **465** and RTP packetizer/depacketizer **440** interfaces to an IP network at **445**.

[0051] In the present embodiment, VoIP media gateway **400** may have some similar functionality to VoIP end terminal **300**. For example VoIP media gateway **400** may monitor a voice over packet media stream **145** for impairments, compute VoIP quality metrics based on the impairments, send the VoIP quality metrics to a session peer, and when a threshold is crossed for the VoIP quality metrics send an event notification to a central entity **200**. In some embodiments an endpoint may also compute threshold crossings for quality metrics that are received from a session peer. In similar fashion to VoIP end terminal **300** above, VoIP quality metrics, or any quality measurements **415** may be sent to CPU **410**, and when a threshold is crossed, VoIP media gateway **400** may notify a central entity **200**. VoIP media gateway **400** may be used in system **100** or otherwise as directed in this disclosure.

[0052] FIG. **5** is a block diagram illustrating an embodiment media server **500**. In some embodiments, media server **500** may comprise a CPU **510** coupled with a message buffer **530**. The message buffer **530** may send or receive signaling messages **535**. In the present embodiment, CPU **510** is coupled with a memory **520**.

[0053] Referring to FIG. **5**, media server **500** may include a CODEC DSP **550** coupled with the CPU **510** as well as a RTP packetizer/depacketizer **540** coupled with CPU **510**. In the present embodiment, the CODEC DSP **550** and the RTP packetizer/depacketizer **540** may be coupled by link **555**. The present embodiment illustrates dedicated DSPs, but embodiments need not be so limited.

[0054] In the embodiment illustrated in FIG. **5**, CODEC DSP **550** is also coupled with a media processor or media store **560** and RTP packetizer/depacketizer **540** interfaces to an IP network at **545**. Media server **500** may also be used in system **100** or otherwise as directed in this disclosure.

[0055] FIG. **6** illustrates an embodiment signaling exchange **600** for Skinny Client Control Protocol (SCCP) messages including an SCCP phone **610** and a call manager (CCM)/call manager express (CCME) **620**. According to this embodiment, the SCCP phone **610** and a CCM or CCME **620** may exchange SCCP messages to change characteristics of a media stream, for example by using RFC 2198 redundancy and/or RFC 2733 FEC.

[0056] In an embodiment, the SCCP phone **610** is programmed to send a StationAlarm message **612** to the CCM/CCME **620** when certain thresholds are crossed. In the

present embodiment, the StationAlarm message **612** may contain an alarm severity field and a string characters to identify the metric that crossed the permissible threshold and whether the metric was local or remote. Currently, SCCP messaging could utilize a string of up to 80 characters to identify the metric that cross the permissible threshold and whether the metric was local or remote, but embodiments need not be so limited, feasibly, longer strings of characters could be used in some embodiments.

[**0057**] According to one embodiment, the CCM or CCME **620** may respond by querying the SCCP phone **610** to apply redundancy, for example according to RFC 2198, and/or FEC, for example according to RFC 2733, if the number of treated calls for a subnet has not exceeded a threshold number of calls that the subnet can handle.

[**0058**] The CCM or CCME **620** may use a StationOpenReceiveChannel message **614** and a StationStartMediaTransmission message **618** to instruct the SCCP phone **610** to apply redundancy and/or FEC. In this embodiment, the StationOpenReceiveChannel message **614** conditions the received media stream, while the StationStartMediaTransmission message **618** conditions the transmitted media stream.

[**0059**] The StationOpenReceiveChannel message **614** may include, among other fields, a media payload type. Appropriate payload types for the support of RFC 2198 redundancy and RFC 2733 forward error correction may be included in the StationOpenReceiveChannel message **614**.

[**0060**] The StationStartMediaTransmission message **618** may include, among other fields, a remote RTP address and port number, and a media payload type. Similar to the StationOpenReceiveChannel message **614**, appropriate payload types for the support of RFC 2198 redundancy and RFC 2733 forward error correction may be included in the StationStartMediaTransmission message **618**.

[**0061**] The CCM/CCME conditions the remote end point **630** in a similar manner. If the remote endpoint **630** is homed on a different call control entity, then the CCM/CCME signals the other call control entity to condition the remote endpoint **630** to change characteristics of a media stream, for example by using RFC 2198 redundancy and/or RFC 2733 FEC.

[**0062**] FIG. **7** illustrates an embodiment signaling exchange **700** for Media Gateway Control Protocol (MGCP) messages including an MGCP endpoint **710** and a call agent **720**. In accordance with an embodiment the call agent **720** may serve as a central call control entity in similar fashion to embodiments described above. According to this embodiment, the MGCP endpoint **710** and call agent **720** may exchange messages to change characteristics of a media stream, for example by using RFC 2198 redundancy and/or RFC 2733 FEC.

[**0063**] In an embodiment, a quality alert event may be used to notify the call agent **720**. A quality alert may be used to designate when the packet loss rate or the combination of delay and jitter exceed a quality threshold in accordance with an RTP package in RFC 3660. Furthermore, quality thresholds for delay, jitter and packet loss rate may be provisioned values.

[**0064**] The call agent **720** may request the MGCP endpoint **710** to notify it of a threshold crossing event via the Quality Alert event. An embodiment may use a NotificationRequest message in accordance with RFC 3435 for this purpose, but embodiments need not be so limited. In the present embodiment, when a threshold crossing occurs, an MGCP endpoint **710** may send a notify message **714**, according to RFC 3435, with a quality alert event embedded in it.

[**0065**] Referring to FIG. **7**, the call agent **720** may respond to a notify message **714** by sending a ModifyConnection command **716**, according to RFC 3435, if the number of treated calls for a subnet has not exceeded a threshold number of calls that the subnet can handle. A ModifyConnection command **716** may include parameters indicating the use of RFC 2198 redundancy and/or RFC 2733 FEC, among other parameters.

[**0066**] According to the present embodiment, a '200 OK' message **718** may be sent from the MGCP endpoint **710** as a positive acknowledgement of the ModifyConnection command **716**. In some embodiments, the ModifyConnection command **716** may be accompanied by a session description which includes a description of the media stream. For example, the media stream description may include the use of RFC 2198 redundancy and/or RFC 2733 FEC.

[**0067**] In an embodiment, the call agent **720** may condition a remote end point **730** in a similar manner. Furthermore, if the remote endpoint **730** is homed on a different call agent, then call agent **720** may signal the other call agent to condition the remote endpoint **730**. In this embodiment, call agent **720** sends the endpoint's session description to the other call agent. In a similar manner to embodiments already described, an example session description may indicates the use of RFC 2198 redundancy and/or RFC 2733 FEC.

[**0068**] FIG. **8** illustrates an embodiment **800** including a distributed call control entity with an SIP endpoint **810**, a Media Performance Manager **820** and a remote SIP endpoint **830**. In system **800**, an SIP endpoint **810** and media performance manager **820** may exchange messages to change characteristics of a media stream, for example to change characteristics of a media stream by using RFC 2198 redundancy and/or RFC 2733 FEC.

[**0069**] To illustrate, SIP endpoint **810** may send reports on threshold crossings, for example threshold reports, to a logical entity such as a media performance manager **820**. Media performance manager **820** may be responsible for collecting performance reports from endpoints, and managing the media characteristics to compensate for performance impairments. The media performance manager **820** may manage the application of redundancy or FEC for all VoIP sessions internal to a fairly large enterprise or service provider network.

[**0070**] In some embodiments, media performance manager **820** can have oversight of a section of a distributed SIP network, for example a service provider network on an enterprise network. Media performance manager **820** may then be provisioned with a number of treated calls which can be supported by a subnet under its control. However, beyond this threshold, redundancy/FEC treatment should not be applied since it may cause congestion and increase impairments.

[**0071**] Some embodiments may subscribe to and receive notifications for a resource state, for example a subnet-wide

error control state, in accordance with RFC 3265. Additionally, reports may be published with SIP in accordance with RFC 3903, Session Initiation Protocol (SIP) Extension for Event State Publication. The content of these published reports is governed by SIP Service Quality Reporting Event, the draft standard for the SIPPING Working Group and a working document of the IETF, dated Oct. 14, 2005.

[0072] For example, an SIP endpoint **810** may subscribe to a subnet-wide error control state maintained by media performance manager **820** as shown with SUBSCRIBE message **812** in accordance with RFC 3265. In response to a PUBLISH message **814** (RFC 3903) containing a threshold report by the SIP endpoint **810**, the media performance manager **820** can send an NOTIFY message **816** to the SIP endpoint **810** instructing it to apply error control treatment if the overall number of treated calls has not exceeded a provisionable threshold. If the overall number of treated calls has exceeded this threshold, then it may withhold this NOTIFY message **816** in accordance with RFC 3265. On receipt of NOTIFY message **816**, the SIP endpoint **810** may send a re-INVITE message **822** to the remote SIP endpoint **830** requesting this media treatment to which the remote SIP endpoint **830** may respond with a **200** OK message **824**.

[0073] In some embodiments, a threshold report may include: (1) a metric for which a threshold crossing occurred and the severity of the event; (2) a 'direction' of the metric, that is, whether it was locally computed or computed by the remote endpoint. Locally computed metrics refer to the direction from the remote endpoint to this endpoint. Remotely computed metrics refer to the direction from this endpoint to the remote endpoint; and (3) a configurable snapshot of other metrics at the time of the threshold crossing may optionally be included with the threshold report. A configurable snapshot of other metrics may be useful, for example, when a MOS degrades below a threshold it would be possible to determine packet loss and inter-arrival jitter levels.

[0074] In distinction with centralized call control, where embodiments are most suitable to enterprise VoIP networks where a cluster of call control entities has purview of the entire enterprise VoIP network, a distributed call control embodiment with a centralized media performance server may be applied to larger-scale enterprise networks and service provider networks.

[0075] FIG. **9** illustrates an embodiment method **900** to adjust redundancy and error correction on an RTP session. The method may comprise monitoring a voice over packet media stream for impairments as shown in block **910**, in block **920** the method may compute quality metrics based on the impairments, send the quality metrics to a session peer as shown in block **930**, and as illustrated in block **940**, when a threshold is crossed for the quality metrics, method **900** may send an event notification to a central entity and the central entity may notify VoIP endpoints to change media characteristics of the voice over packet media stream in relation to the impairments, as illustrated in block **950**. In an embodiment the quality metrics are VoIP quality metrics. In some embodiments an endpoint may also compute threshold crossings for quality metrics that are received from a session peer.

[0076] Some embodiments may further comprise throttling the changes in media characteristics in response to reaching a criticality threshold where media quality would be deteriorated by the media characteristics changes. In some embodiments, the media characteristics may include at least one of forward error correction and redundancy.

[0077] Some embodiments may be a machine readable medium comprising instructions that when loaded on the machine cause the machine to perform an embodiment method as illustrated with reference to FIG. **9**.

[0078] Method **900** may further comprise determining the media characteristics changes and the bandwidth impacts of these changes. In similar fashion to the apparatus and system embodiments above, the VoIP quality metrics may be at least one of MOS-LQ, packet loss, frame loss, objective metrics, inter-arrival jitter, MOS-CQ, ITU G.107 R-factor, etc. and may be communicated to a session peer with Real-time Control Protocol Extended Reports (RTCP-XR).

[0079] In yet another embodiment method, the event notification may be sent to a central entity with Skinny Client Control Protocol, Media Gateway Control Protocol, Session Initiation Protocol or H.248. In some embodiment methods, the VoIP quality metrics may be concealed seconds objective metrics as disclosed below in FIG. **11**.

[0080] FIG. **10** illustrates an embodiment endpoint **1000** that uses an objective metric to determine quality of VoIP data. Object metrics may use a frame loss concealment method as an objective measure of media impairment. Example audio concealment mechanisms used in voice over packet systems include silence, comfort noise, simple last-frame-replay, and sophisticated interpolation methods such as ITU standard G.711 appendix 1 Packet Loss Concealment.

[0081] As an example, a concealment vector (CV) comprising a stream of information may be generated by observing a voice over packet endpoint. A CV may be used to derive concealed seconds (CS) counts to use concealment information as an objective measure of media impairment. For example, a "1 " may be written to a CV every time decoder creates a concealment frame of audio, while each non-concealed or normally decoded output frame causes a "0" to be written to the concealment vector. This is an example method to generate a CV. Therefore, a concealed seconds meter may process CVs and determine different levels of impairment based upon the concealment events recorded in a CV.

[0082] Referring to FIG. **10**, endpoint **1000** may include an input **1005** to receive packetized audio information, such as VoIP, and provide it to dejitter buffer **1010**. Dejitter buffer **1010** may then provide a synchronous stream of coded frames of audio information that is the payload from the packetized audio information, to decoder **1020**. Therefore, a concealed seconds meter **1015** may be coupled to the node between dejitter buffer **1010** and decoder **1020**, and it may observe and processes CVs to determinate different levels of impairment based upon the concealment events recorded in the CVs. Endpoint **1000** illustrates an example objective metric that may be used as a quality metric in the above embodiments, but other objective metrics may be used to adaptively and centrally correct for errors in a RTP media stream.

[0083] The present invention may be embodied in other specific forms without departing from its spirit or essential

characteristics. The described embodiments are to be considered in all respects only as illustrative instead of restrictive or limiting. Therefore, the scope of the invention is indicated by the appended claims rather than by the foregoing description. All changes, modifications, and alterations that come within the meaning, spirit, and range of equivalency of the claims are to be embraced as being within the scope of the appended claims.

1. A method comprising:

monitoring a voice over packet media stream for impairments;

computing voice over packet quality metrics based on the impairments;

sending the voice over packet quality metrics to a session peer;

when a threshold is crossed for the voice over packet metrics, sending an event notification to a central entity; and

changing media characteristics of the voice over packet media stream in relation to the impairments as directed by the central entity.

2. The method of claim 1 further comprising throttling the changes in media characteristics in response to reaching a criticality threshold where media quality would be deteriorated by the media characteristics changes.

3. The method of claim 1 wherein the media characteristics include at least one of forward error correction and redundancy.

4. The method of claim 1 further comprising determining the media characteristics changes and the bandwidth impacts of these changes.

5. The method of claim 1 wherein the voice over packet quality metrics are at least one of MOS-LQ, packet loss, frame loss, objective metrics, inter-arrival jitter, MOS-CQ and ITU G.107 R-factor.

6. The method of claim 1 wherein the voice over packet quality metrics are sent to a session peer with Real-time Control Protocol Extended Reports (RTCP-XR).

7. The method of claim 1 wherein the event notification is sent to a central entity with Skinny Client Control Protocol, Media Gateway Control Protocol, Session Initiation Protocol or H.248.

8. The method of claim 1 wherein the voice over packet quality metrics are concealed seconds and severely concealed seconds objective metrics.

9. An apparatus comprising:

a message buffer to receive messages from a voice over packet endpoint if impairments in a media stream pass a threshold; and

a processor coupled with the message buffer, the processor to determine changes to the media characteristics for the voice over packet endpoint in relation to the impairments and to signal the voice over packet endpoint to adjust media characteristics of the media stream.

10. The apparatus of claim 9 wherein the processor can throttle the changes in media characteristics in response to reaching a criticality threshold where media quality would be deteriorated by the media characteristics changes.

11. The apparatus of claim 9 wherein the media characteristics include at least one of forward error correction and redundancy.

12. The apparatus of claim 9 wherein the processor can determine the media characteristics changes and the bandwidth impacts of these changes.

13. The apparatus of claim 9 wherein Voice over packet quality metrics are computed based on the impairments and the Voice over packet quality metrics are at least one of MOS-LQ, packet loss, frame loss, objective metrics, inter-arrival jitter, MOS-CQ and ITU G.107 R-factor.

14. The apparatus of claim 13 wherein the Voice over packet quality metrics are concealed seconds objective metrics.

15. A system comprising:

a first voice over packet endpoint to send a media stream;

a second voice over packet endpoint to receive the media stream, monitor the media stream for impairments, and compute Voice over packet quality metrics based on the impairments and to detect when a threshold is crossed for the Voice over packet quality metrics; and

a central entity to determine changes to the media characteristics of the media stream in relation to the impairments in response to a detected threshold crossing of the Voice over packet quality metrics.

16. The system of claim 15 wherein the central entity can throttle the changes in media characteristics of the media stream in response to reaching a criticality threshold where media quality would be deteriorated by the media characteristics changes.

17. The system of claim 15 wherein the media characteristics include at least one of forward error correction and redundancy.

18. The system of claim 15 wherein the central entity can compute the media characteristics changes and the bandwidth impacts of these changes.

19. The system of claim 15 wherein the Voice over packet quality metrics are at least one of MOS-LQ, packet loss, frame loss, objective metrics, inter-arrival jitter, MOS-CQ and ITU G.107 R-factor.

20. The system of claim 15 wherein the first voice over packet endpoint and the second voice over packet endpoint communicate the Voice over packet quality metrics with each other with Real-time Control Protocol Extended Reports (RTCP-XR).

21. The system of claim 15 wherein the second voice over packet endpoint notifies the central entity of a Voice over packet quality metric threshold crossing with Skinny Client Control Protocol, Media Gateway Control Protocol, Session Initiation Protocol or H.248.

22. The system of claim 15 wherein the Voice over packet quality metrics are concealed seconds objective metrics.

23. An apparatus comprising:

means for receiving an event notification from a voice over packet endpoint, the event notification being sent if impairments in a media stream pass a threshold;

means for determining changes to the media characteristics for the voice over packet endpoint in relation to the impairments; and

means for signaling the voice over packet endpoint to allow the voice over packet endpoint to adjust media characteristics of the media stream.

24. The apparatus of claim 23 further comprising means for throttling the changes in media characteristics in response to reaching a criticality threshold where media quality would be deteriorated by the media characteristics changes.

25. The apparatus of claim 23 wherein the media characteristics include at least one of forward error correction and redundancy.

26. The apparatus of claim 23 further comprising means for determining the media characteristics changes and the bandwidth impacts of these changes.

27. The apparatus of claim 23 wherein the Voice over packet quality metrics are at least one of MOS-LQ, packet loss, frame loss, objective metrics, inter-arrival jitter, MOS-CQ and ITU G.107 R-factor.

28. The apparatus of claim 23 wherein the Voice over packet quality metrics are sent to a session peer with real-time control protocol extended reports (RTCP-XR).

29. The apparatus of claim 23 wherein the event notification is sent to a central entity with skinny client control protocol, media gateway control protocol, Session Initiation Protocol or H.248.

30. A machine readable medium comprising instructions that when loaded on the machine cause the machine to:

receive an event notification from a voice over packet endpoint, the event notification being sent if impairments in a media stream pass a threshold;

determine changes to the media characteristics for the voice over packet endpoint in relation to the impairments; and

signal the voice over packet endpoint to allow the voice over packet endpoint to adjust media characteristics of the media stream.

31. The medium of claim 30 further comprising instructions to throttle the changes in media characteristics in response to reaching a criticality threshold where media quality would be deteriorated by the media characteristics changes.

32. The medium of claim 30 further comprising instructions to determine the media characteristics changes and to determine the bandwidth impacts of these changes.

* * * * *