US010219661B2

(12) **United States Patent**
Conrad

(10) **Patent No.: US 10,219,661 B2**
(45) **Date of Patent: Mar. 5, 2019**

(54) **SURFACE CLEANING APPARATUS**

(71) Applicant: **Omachron Intellectual Property Inc.**, Hampton (CA)

(72) Inventor: **Wayne Ernest Conrad**, Hampton (CA)

(73) Assignee: **Omachron Intellectual Property Inc.**, Hampton, Ontario (CA)

(*) Notice: Subject to any disclaimer, the term of this patent is extended or adjusted under 35 U.S.C. 154(b) by 408 days.

(21) Appl. No.: **15/085,830**

(22) Filed: **Mar. 30, 2016**

(65) **Prior Publication Data**

US 2016/0206163 A1 Jul. 21, 2016

Related U.S. Application Data

(63) Continuation of application No. 14/822,211, filed on Aug. 10, 2015, now Pat. No. 9,888,817.

(60) Provisional application No. 62/093,189, filed on Dec. 17, 2014.

(51) **Int. Cl.**

A47L 9/32	(2006.01)
A47L 5/22	(2006.01)
A47L 5/24	(2006.01)
A47L 5/28	(2006.01)
A47L 9/16	(2006.01)

(52) **U.S. Cl.**

CPC ***A47L 5/225*** (2013.01); ***A47L 5/24*** (2013.01); ***A47L 5/28*** (2013.01); ***A47L 9/16*** (2013.01); ***A47L 9/1608*** (2013.01); ***A47L 9/1625*** (2013.01); ***A47L 9/1641*** (2013.01); ***A47L 9/1683*** (2013.01); ***A47L 9/1691*** (2013.01); ***A47L 9/322*** (2013.01); ***A47L 9/325*** (2013.01)

(58) **Field of Classification Search**

CPC A47L 5/225; A47L 9/1608; A47L 9/16; A47L 9/322; A47L 9/1641; A47L 9/1625; A47L 9/325; A47L 5/28; A47L 9/1691; A47L 9/1683; A47L 5/24

IPC A47L 9/32

See application file for complete search history.

(56) **References Cited**

U.S. PATENT DOCUMENTS

911,258	A	2/1909	Neumann
1,600,762	A	9/1926	Hawley
1,797,812	A	3/1931	Waring
1,898,608	A	2/1933	Alexander
1,937,765	A	12/1933	Leathers
2,015,464	A	9/1935	Camille
2,152,114	A	3/1939	Tongeren
2,542,634	A	2/1951	Davis et al.
2,678,110	A	5/1954	Madsen
2,731,102	A	1/1956	James
2,811,219	A	10/1957	Wenzl
2,846,024	A	8/1958	Bremi
2,913,111	A	11/1959	Rogers
2,917,131	A	12/1959	Evans

(Continued)

FOREIGN PATENT DOCUMENTS

AU	112778	4/1940
CA	1077412 A1	5/1980

(Continued)

OTHER PUBLICATIONS

Instruction manual: Makita Cordless Cleaner, Handy Vac II, Model 4071D; dated at least as early as 1993.

(Continued)

Primary Examiner — David Redding

(74) *Attorney, Agent, or Firm* — Philip C. Mendes da Costa; Bereskin & Parr LLP/S.E.N.C.R.L., S.R.L.

(57) **ABSTRACT**

A hand vacuum cleaner has a horizontally disposed cyclone handle and the main body has a handle axis that extends upwardly and forwardly with respect to the cyclone axis of rotation.

16 Claims, 130 Drawing Sheets

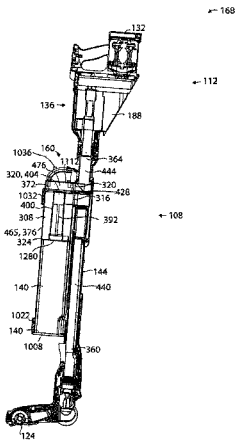

(56) **References Cited**

U.S. PATENT DOCUMENTS

2,937,713 A 5/1960 Stephenson et al.
2,942,691 A 6/1960 Dillon
2,942,692 A 6/1960 Benz
2,946,451 A 7/1960 Culleton
2,952,330 A 9/1960 Winslow
2,981,369 A 4/1961 Yellott et al.
3,032,954 A 5/1962 Racklyeft
3,085,221 A 4/1963 Kelly
3,130,157 A 4/1964 Kelsall et al.
3,200,568 A 8/1965 McNeil
3,204,772 A 9/1965 Ruxton
3,217,469 A 11/1965 Eckert
3,269,097 A 8/1966 German
3,320,727 A 5/1967 Farley et al.
3,372,532 A 3/1968 Campbell
3,426,513 A 2/1969 Bauer
3,518,815 A 7/1970 Peterson et al.
3,530,649 A 9/1970 Porsch et al.
3,543,325 A 12/1970 Hamrick et al.
3,561,824 A 2/1971 Homan
3,582,616 A 6/1971 Wrob
3,675,401 A 7/1972 Cordes
3,684,093 A 8/1972 Kono
3,822,533 A 7/1974 Oranje
3,898,068 A 8/1975 McNeil et al.
3,933,450 A 1/1976 Percevaut
3,988,132 A 10/1976 Oranje
3,988,133 A 10/1976 Schady
4,097,381 A 6/1978 Ritzler
4,187,088 A 2/1980 Hodgson
4,218,805 A 8/1980 Brazier
4,236,903 A 12/1980 Malmsten
4,307,485 A 12/1981 Dessig
4,373,228 A 2/1983 Dyson
4,382,804 A 5/1983 Mellor
4,409,008 A 10/1983 Solymes
4,486,207 A 12/1984 Baillie
4,494,270 A 1/1985 Ritzau et al.
4,523,936 A 6/1985 Disanza, Jr.
4,678,588 A 7/1987 Shortt
4,700,429 A 10/1987 Martin et al.
4,744,958 A 5/1988 Pircon
4,778,494 A 10/1988 Patterson
4,803,753 A 2/1989 Palmer
4,826,515 A 5/1989 Dyson
D303,173 S 8/1989 Masakata et al.
4,853,008 A 8/1989 Dyson
4,853,011 A 8/1989 Dyson
4,853,111 A 8/1989 MacArthur et al.
4,905,342 A 3/1990 Ataka
4,944,780 A 7/1990 Usmani
4,980,945 A 1/1991 Bewley
5,054,157 A 10/1991 Werner et al.
5,078,761 A 1/1992 Dyson
5,080,697 A 1/1992 Finke
5,090,976 A 2/1992 Dyson
5,129,125 A 7/1992 Gamou et al.
5,224,238 A 7/1993 Bartlett
5,230,722 A 7/1993 Yonkers
5,254,019 A 10/1993 Noschese
5,267,371 A 12/1993 Solerm et al.
5,287,591 A 2/1994 Rench et al.
5,307,538 A 5/1994 Rench et al.
5,309,600 A 5/1994 Weaver et al.
5,309,601 A 5/1994 Hampton et al.
5,347,679 A 9/1994 Saunders et al.
5,363,535 A 11/1994 Rench et al.
5,481,780 A 1/1996 Daneshvar
5,515,573 A 5/1996 Frey
5,599,365 A 2/1997 Alday et al.
D380,033 S 6/1997 Masterton et al.
5,709,007 A 1/1998 Chiang
5,755,096 A 5/1998 Holleyman
5,815,878 A 10/1998 Murakami et al.
5,815,881 A 10/1998 Sjoegreen
5,858,038 A 1/1999 Dyson et al.
5,858,043 A 1/1999 Geise
5,893,938 A 4/1999 Dyson et al.
5,935,279 A 8/1999 Kilstroem
5,950,274 A 9/1999 Kilstrom
5,970,572 A 10/1999 Thomas
6,071,095 A 6/2000 Verkaar
6,071,321 A 6/2000 Trapp et al.
6,080,022 A 6/2000 Shaberman et al.
6,122,796 A 9/2000 Downham et al.
6,210,469 B1 4/2001 Tokar
6,221,134 B1 4/2001 Conrad et al.
6,228,260 B1 5/2001 Conrad et al.
6,231,645 B1 5/2001 Conrad et al.
6,251,296 B1 6/2001 Conrad et al.
6,260,234 B1 7/2001 Wright et al.
6,345,408 B1 2/2002 Nagai et al.
6,406,505 B1 6/2002 Oh et al.
6,434,785 B1 8/2002 Vandenbelt et al.
6,440,197 B1 8/2002 Conrad et al.
6,502,278 B2 1/2003 Oh et al.
6,519,810 B2 2/2003 Kim
6,531,066 B1 3/2003 Saunders et al.
6,553,612 B1 4/2003 Dyson et al.
6,553,613 B2 4/2003 Onishi et al.
6,560,818 B1 5/2003 Hasko
6,581,239 B1 6/2003 Dyson et al.
6,599,338 B2 7/2003 Oh et al.
6,599,350 B1 7/2003 Rockwell et al.
6,613,316 B2 9/2003 Sun et al.
6,623,539 B2 9/2003 Lee et al.
6,625,845 B2 9/2003 Matsumoto et al.
6,640,385 B2 11/2003 Oh et al.
6,648,934 B2 11/2003 Choi et al.
6,712,868 B2 3/2004 Murphy et al.
6,732,403 B2 5/2004 Moore et al.
6,746,500 B1 6/2004 Park et al.
6,766,558 B1 7/2004 Matsumoto et al.
6,782,583 B2 8/2004 Oh
6,782,585 B1 8/2004 Conrad et al.
6,810,558 B2 11/2004 Lee
6,818,036 B1 11/2004 Seaman
6,833,015 B2 12/2004 Oh et al.
6,868,578 B1 3/2005 Kasper
6,874,197 B1 4/2005 Conrad
6,896,719 B2 5/2005 Coates et al.
6,929,516 B2 8/2005 Brochu et al.
6,968,596 B2 11/2005 Oh et al.
6,976,885 B2 12/2005 Lord
7,113,847 B2 9/2006 Chumura et al.
7,128,770 B2 10/2006 Oh et al.
7,160,346 B2 1/2007 Park
7,162,770 B2 1/2007 Davidshofer
7,175,682 B2 2/2007 Nakai et al.
7,198,656 B2 4/2007 Takemoto et al.
7,222,393 B2 5/2007 Kaffenberger et al.
7,272,872 B2 9/2007 Choi
7,278,181 B2 10/2007 Harris et al.
7,341,611 B2 3/2008 Greene et al.
7,354,468 B2 4/2008 Arnold et al.
7,370,387 B2 5/2008 Walker et al.
7,377,007 B2 5/2008 Best
7,377,953 B2 5/2008 Oh
7,386,915 B2 6/2008 Blocker et al.
7,395,579 B2 7/2008 Oh
7,426,768 B2 9/2008 Peterson et al.
7,429,284 B2 9/2008 Oh
7,448,363 B1 11/2008 Rasmussen et al.
7,449,040 B2 11/2008 Conrad et al.
7,485,164 B2 2/2009 Jeong et al.
7,488,363 B2 2/2009 Jeong et al.
7,547,337 B2 6/2009 Oh
7,547,338 B2 6/2009 Kim et al.
7,563,298 B2 7/2009 Oh
7,565,853 B2 7/2009 Arnold et al.
7,588,616 B2 9/2009 Conrad et al.
7,597,730 B2 10/2009 Yoo et al.
7,628,831 B2 12/2009 Gomiciaga-Pereda et al.
7,691,161 B2 4/2010 Oh et al.

(56) **References Cited**

U.S. PATENT DOCUMENTS

7,717,973	B2	5/2010	Oh et al.
7,740,676	B2	6/2010	Bumham et al.
7,770,256	B1	8/2010	Fester
7,776,120	B2	8/2010	Conrad
7,779,506	B2	8/2010	Kang et al.
7,803,207	B2	9/2010	Conrad
7,805,804	B2	10/2010	Loebig
7,811,349	B2	10/2010	Nguyen
7,867,308	B2	1/2011	Conrad
7,882,593	B2	2/2011	Beskow et al.
7,922,794	B2	4/2011	Morphey
7,931,716	B2	4/2011	Oakham
7,938,871	B2	5/2011	Lloyd
7,958,598	B2	6/2011	Yun et al.
7,979,959	B2	7/2011	Courtney
7,996,956	B2	8/2011	Wood et al.
8,021,453	B2	9/2011	Howes
8,062,398	B2	11/2011	Luo et al.
8,100,999	B2	1/2012	Ashbee et al.
8,101,001	B2	1/2012	Qian
8,117,712	B2	2/2012	Dyson et al.
3,151,407	A1	4/2012	Conrad
8,146,201	B2	4/2012	Conrad
8,152,877	B2	4/2012	Greene
8,156,609	B2	4/2012	Milne et al.
8,161,599	B2	4/2012	Griffith et al.
8,225,456	B2	7/2012	Håkan et al.
8,484,799	B2	7/2013	Conrad
8,673,487	B2	3/2014	Churchill
9,192,269	B2	11/2015	Conrad
9,675,218	B2	6/2017	Kim et al.
2002/0011050	A1	1/2002	Hansen et al.
2002/0011053	A1	1/2002	Oh
2002/0062531	A1	5/2002	Oh
2002/0088208	A1	7/2002	Lukac et al.
2002/0112315	A1	8/2002	Conrad
2002/0134059	A1	9/2002	Oh
2002/0134238	A1	9/2002	Conrad et al.
2002/0178535	A1	12/2002	Oh et al.
2002/0178698	A1	12/2002	Oh et al.
2002/0178699	A1	12/2002	Oh
2003/0037403	A1	2/2003	Lang
2003/0046910	A1	3/2003	Lee
2003/0066273	A1	4/2003	Choi et al.
2003/0106180	A1	6/2003	Tsen
2003/0159238	A1	8/2003	Oh
2003/0159411	A1	8/2003	Hansen et al.
2003/0200736	A1	10/2003	Ni
2004/0010885	A1	1/2004	Hitzelberger et al.
2004/0025285	A1	2/2004	McCormick et al.
2004/0045126	A1	3/2004	Parker et al.
2004/0216264	A1	11/2004	Shaver et al.
2005/0081321	A1	4/2005	Milligan et al.
2005/0115409	A1	6/2005	Conrad
2005/0132528	A1	6/2005	Yau
2005/0198769	A1	9/2005	Lee et al.
2005/0198770	A1	9/2005	Jung et al.
2005/0252179	A1	11/2005	Oh et al.
2005/0252180	A1	11/2005	Oh et al.
2006/0037172	A1	2/2006	Choi
2006/0042206	A1	3/2006	Arnold et al.
2006/0090290	A1	5/2006	Lau
2006/0123590	A1	6/2006	Fester et al.
2006/0137304	A1	6/2006	Jeong et al.
2006/0137306	A1	6/2006	Jeong et al.
2006/0137309	A1	6/2006	Jeong et al.
2006/0137314	A1	6/2006	Conrad et al.
2006/0156508	A1	7/2006	Khalil
2006/0162298	A1	7/2006	Oh et al.
2006/0162299	A1	7/2006	North
2006/0168922	A1	8/2006	Oh
2006/0168923	A1	8/2006	Lee et al.
2006/0207055	A1	9/2006	Ivarsson et al.
2006/0207231	A1	9/2006	Arnold
2006/0230715	A1	10/2006	Oh et al.
2006/0230723	A1	10/2006	Kim et al.
2006/0230724	A1	10/2006	Han et al.
2006/0236663	A1	10/2006	Oh
2006/0254226	A1	11/2006	Jeon
2006/0278081	A1	12/2006	Han et al.
2006/0288516	A1	12/2006	Sawalski
2007/0067944	A1	3/2007	Kitamura
2007/0077810	A1	4/2007	Gogel
2007/0079473	A1	4/2007	Min
2007/0079585	A1	4/2007	Oh et al.
2007/0095028	A1	5/2007	Kim
2007/0095029	A1	5/2007	Min
2007/0136984	A1	6/2007	Hsu
2007/0209334	A1	9/2007	Conrad
2007/0209335	A1	9/2007	Conrad
2007/0271724	A1	11/2007	Hakan et al.
2007/0289089	A1	12/2007	Yacobi
2007/0289266	A1	12/2007	Oh
2008/0040883	A1	2/2008	Beskow et al.
2008/0047091	A1	2/2008	Nguyen
2008/0134460	A1	6/2008	Conrad
2008/0134462	A1	6/2008	Jansen et al.
2008/0178416	A1	7/2008	Conrad
2008/0178420	A1	7/2008	Conrad
2008/0190080	A1	8/2008	Oh et al.
2008/0196194	A1	8/2008	Conrad
2008/0196745	A1	8/2008	Conrad
2008/0301903	A1	12/2008	Cunningham et al.
2009/0044372	A1	2/2009	Knopow et al.
2009/0100633	A1	4/2009	Bates et al.
2009/0113659	A1	5/2009	Jeon
2009/0144932	A1	6/2009	Yoo
2009/0165431	A1	7/2009	Oh
2009/0205160	A1	8/2009	Conrad
2009/0205161	A1	8/2009	Conrad
2009/0205298	A1	8/2009	Hyun et al.
2009/0209666	A1	8/2009	Hellberg et al.
2009/0265877	A1	10/2009	Dyson et al.
2009/0282639	A1	11/2009	Dyson et al.
2009/0300874	A1	12/2009	Tran et al.
2009/0300875	A1	12/2009	Inge et al.
2009/0307564	A1	12/2009	Vedantham et al.
2009/0307863	A1	12/2009	Milne et al.
2009/0307864	A1	12/2009	Dyson
2009/0308254	A1	12/2009	Oakham
2009/0313958	A1	12/2009	Gomiciaga-Pereda et al.
2009/0313959	A1	12/2009	Gomiciaga-Pereda et al.
2010/0083459	A1	4/2010	Beskow et al.
2010/0132319	A1	6/2010	Ashbee et al.
2010/0154150	A1	6/2010	McLeod
2010/0175217	A1	7/2010	Conrad
2010/0212104	A1	8/2010	Conrad
2010/0224073	A1	9/2010	Oh et al.
2010/0229321	A1	9/2010	Dyson et al.
2010/0229324	A1	9/2010	Conrad
2010/0229328	A1	9/2010	Conrad
2010/0242210	A1	9/2010	Conrad
2010/0243158	A1	9/2010	Conrad
2010/0293745	A1	11/2010	Coburn
2010/0299865	A1	12/2010	Conrad
2010/0299866	A1	12/2010	Conrad
2011/0023261	A1	2/2011	Proffitt, II et al.
2011/0146024	A1	6/2011	Conrad
2011/0168332	A1	7/2011	Bowe et al.
2011/0219576	A1	9/2011	Conrad
2011/0289719	A1	12/2011	Han et al.
2012/0023701	A1	2/2012	Lenkiewicz et al.
2012/0030896	A1	2/2012	Crouch et al.
2012/0060322	A1	3/2012	Simonelli et al.
2012/0079671	A1	4/2012	Stickney et al.
2012/0216361	A1	8/2012	Millington et al.
2012/0222245	A1	9/2012	Conrad
2012/0222260	A1	9/2012	Conrad
2012/0222262	A1	9/2012	Conrad
2013/0160232	A1	6/2013	Peace
2014/0137362	A1	5/2014	Smith
2014/0137363	A1	5/2014	Wilson
2014/0137364	A1	5/2014	Stickney et al.
2014/0182080	A1	7/2014	Lee et al.

(56) **References Cited**

U.S. PATENT DOCUMENTS

2014/0208538	A1	7/2014	Visel et al.
2014/0237956	A1	8/2014	Conrad
2015/0135474	A1	5/2015	Gidwell
2015/0230677	A1	8/2015	Andrikanish
2015/0297050	A1	10/2015	Marsh et al.
2016/0113460	A1	4/2016	Williams et al.

FOREIGN PATENT DOCUMENTS

CA	1218962	A	3/1987
CA	2450450	A1	12/2004
CA	2484587	A1	4/2005
CA	2438079	C	8/2009
CA	2658014	A1	9/2010
CA	2659212	A1	9/2010
CN	1336154	A	2/2002
CN	1434688	A	8/2003
CN	1493244	A	5/2004
CN	1626025	A	6/2005
CN	1875846	A	12/2006
CN	1875855	A	12/2006
CN	1887437	A	1/2007
CN	1895148	A	1/2007
CN	101061932	A	10/2007
CN	101095604	A	1/2008
CN	101108081	A	1/2008
CN	101108106	A	1/2008
CN	101108110	A	1/2008
CN	101448447	A	6/2009
CN	101489453	A	7/2009
CN	101489455	A	7/2009
CN	101489457	A	7/2009
CN	101489461	A	7/2009
CN	201290642	Y	8/2009
CN	101822506	A	9/2010
CN	201683850	U	12/2010
CN	102188208	A	9/2011
CN	102256523	A	11/2011
CN	202739907	U	2/2013
CN	202932850	U	5/2013
CN	203724037	U	7/2014
CN	204363891	U	6/2015
CN	105816104	A	8/2016
CN	205671986	U	11/2016
DE	875134	C	4/1953
DE	9216071.9	U1	2/1993
DE	4232382	C1	3/1994
DE	10056935	C2	1/2003
DE	69907201	T2	2/2004
DE	60201666	T2	6/2006
DE	60211663	T2	5/2007
DE	102007011457	A1	10/2007
DE	112010001135	T5	8/2012
DE	202010018047	U1	11/2013
DE	102012211246	A1	1/2014
DE	202010018084	U1	2/2014
DE	202010018085	U1	2/2014
EP	0489498	A1	6/1992
EP	493950	B1	7/1992
EP	1200196	B1	6/2005
EP	1779761	A2	5/2007
EP	1815777	A1	8/2007
EP	1594386	B1	4/2009
EP	1676516	B1	1/2010
EP	2308360	A2	4/2011
EP	1629758	A3	10/2013
EP	2848173	A1	3/2015
FR	2812531	B1	11/2004
GB	700791	A	12/1953
GB	1111074	A	4/1968
GB	203578	B	10/1982
GB	2163703	B	1/1988
GB	2268875	A	1/1994
GB	2307849	A	6/1997
GB	2282979	B	10/1997
GB	2365324	B	7/2002
GB	2440111	A	1/2008
GB	2465781	A	6/2010
GB	2441962	B	3/2011
GB	2466290	B	10/2012
GB	2508035		5/2014
JP	61131720	A	6/1986
JP	2000140533	A	5/2000
JP	2002085297	A	3/2002
JP	2003135335	A	5/2003
JP	2005040246	A	2/2005
JP	2006102034	A	4/2006
JP	2008206613	A	9/2008
JP	2009261501	A	11/2009
JP	2010081968	A	4/2010
JP	2010178773	A	8/2010
JP	2010220632	A	10/2010
JP	2011189132	A	9/2011
JP	2011189133	A	9/2011
JP	2013086228	A	5/2013
KR	1020010045598	A	6/2001
KR	1020020067489	A	8/2002
KR	1020020085478	A	11/2002
KR	1020040050174	A	6/2004
KR	1020060008365	A	1/2006
KR	1020060118795	A	11/2006
KR	1020060118800	A	11/2006
KR	1020060118802	A	11/2006
KR	1020060118803	A	11/2006
KR	1020060122249	A	11/2006
KR	1020060125952	A	12/2006
KR	1020060125954	A	12/2006
KR	1020100084127	A	7/2010
NL	10681	C	11/1923
WO	1980002561	A1	11/1980
WO	9627446	A1	9/1996
WO	97/20492	A1	6/1997
WO	9809121	A1	3/1998
WO	9843721	A1	10/1998
WO	01/07168	A1	2/2001
WO	0147247	A2	6/2001
WO	2010147247	A1	11/2001
WO	02/017766	A3	3/2002
WO	2004069021	A1	8/2004
WO	2006076363	A2	7/2006
WO	2006076363	A3	12/2006
WO	2006026414	A3	8/2007
WO	2007104238	A1	9/2007
WO	2008009883	A1	1/2008
WO	2008009888	A1	1/2008
WO	2008009890	A1	1/2008
WO	2008009891	A1	1/2008
WO	2008035032	A2	3/2008
WO	2008035032	A3	6/2008
WO	2008070973	A1	6/2008
WO	2008088278	A2	7/2008
WO	2008135708	A1	11/2008
WO	2009026709	A1	3/2009
WO	2010102396	A1	9/2010
WO	2010142968	A1	12/2010
WO	2010142969	A1	12/2010
WO	2010142970	A1	12/2010
WO	2010142971	A1	12/2010
WO	2011054106	A1	5/2011
WO	2012042240	A1	4/2012
WO	2012117231	A1	9/2012
WO	2015129387	A1	9/2015
WO	2016065151	A1	4/2016
WO	2017046557	A1	3/2017
WO	2017046559	A1	3/2017
WO	2017046560	A1	3/2017

OTHER PUBLICATIONS

International Preliminary Report on Patentability, dated Sep. 16, 2008 for International application No. PCT/CA2007/000380.

Supplementary European Search Report, dated Jun. 16, 2009, as received on the corresponding EP application No. 07719394.4.

(56) **References Cited**

OTHER PUBLICATIONS

Office Action received in connection to the corresponding Chinese Patent Application No. 200880126486.6 dated Mar. 23, 2012.
Office Action received in connection to the corresponding U.S. Appl. No. 12/720,901 dated Jun. 10, 2011.
Office Action received in connection to the related Chinese Patent Application No. 00813438.3 dated Jul. 11, 2003.
Handbook of Air Pollution Prevention and Contriol, pp. 397-404, 2002.
Makita 4071 Handy Vac.
Makita BCL180 User Manual.
European Communication pursuant to Article 94(3) on European Patent Application No. 04078261.7, dated Apr. 24, 2012.
European Communication pursuant to Article 94(3) on European Patent Application No. 04078261.7, dated Feb. 26, 2010.
International Preliminary Examination Report on International application No. PCT/CA00/00873, dated Oct. 26, 2001.
Office Action dated Jul. 7, 2010, for Canadian Patent Application No. 2,675,714.
International Search Report and Written Opinion received in connection to International patent application No. PCT/CA2007/002211, dated Apr. 21, 2008.
International Search Report and Written Opinion received in connection to international patent application No. PCT/CA2015/050661, dated Oct. 19, 2015.
United States Office Action, dated Feb. 16, 2011, for U.S. Appl. No. 11/953,292.
United States Office Action, dated Jul. 22, 2010, for U.S. Appl. No. 11/953,292.
Euro-Pro Shark Cordless Hand Vac Owner's Manual, published in 2002.
International Preliminary Examination Report on International application No. PCT/CA2015/051332, dated Mar. 7, 2016.
English machine translation of WO2010147247A1 published on Nov. 15, 2001.
English machine translation of CN204363891U published on Jun. 3, 2015.
English machine translation of JP2008206613A published on Sep. 11, 2008.
English machine translation of JP2002085297A published on Mar. 26, 2002.
English machine translation of WO2015129387A1 published on Sep. 3, 2015.
English machine translation of CN202739907U published on Feb. 20, 2013.
English machine translation of CN205671986U published on Nov. 9, 2016.
English machine translation of CN105816104A published on Aug. 3, 2016.
English machine translation of JP2013086228A published on May 13, 2013.
English machine translation of JP2006102034A published on Apr. 20, 2006.
Combined Search and Examination Report under Sections 17 & 18(3) received in connection to the corresponding GB Patent Application No. 1522195.5 dated Jun. 16, 2016.
Combined Search and Examination Report under Sections 17 & 18(3) received in connection to the corresponding GB Patent Application No. 1706875.0 dated May 25, 2017.
International Preliminary Report on Patentability in International Application No. PCT/CA2015/051332 dated Jun. 29, 2017.
International Search Report and Written Opinion received in connection to International Patent Application No. PCT/CA2014/000133, dated May 26, 2014.
International Search Report and Written Opinion received in connection to International patent application No. PCT/CA2017/050436, dated Jul. 21, 2017.
International Search Report and Written Opinion received in connection to International patent application No. PCT/CA2017/050014, dated Apr. 5, 2017.
English machine translation of CN101095604A published on Jan. 2, 2008.
English machine translation of CN101108081A published on Jan. 23, 2008.
English machine translation of CN101108106A published on Jan. 23, 2008.
English machine translation of CN101108110A published on Jan. 23, 2008.
English machine translation of CN101448447A published on Jun. 3, 2009.
English machine translation of CN101489453A published on Jul. 22, 2009.
English machine translation of CN101489455A published on Jul. 22, 2009.
English machine translation of CN101489457A published on Jul. 22, 2009.
English machine translation of CN101489461A published on Jul. 22, 2009.
English machine translation of CN101822506A published on Sep. 8, 2010.
English machine translation of CN102188208A published on Sep. 21, 2011.
English machine translation of CN102256523A published on Nov. 23, 2011.
English machine translation of CN1336154A published on Feb. 20, 2002.
English machine translation of CN1434688A published on Aug. 6, 2003.
English machine translation of CN1626025A published on Jun. 16, 2005.
English machine translation of CN1875846A published on Dec. 13, 2006.
English machine translation of CN1875855A published on Dec. 13, 2006.
English machine translation of CN1895148A published on Jan. 17, 2007.
English machine translation of CN201290642Y published on Aug. 19, 2009.
English machine translation of CN201683850U published on Dec. 29, 2010.
English machine translation of CN203724037U published on Jul. 23, 2014.
English machine translation of DE10056935C2 published on Jan. 16, 2003.
English machine translation of DE102007011457A1 published on Oct. 25, 2007.
English machine translation of DE102012211246A1 published on Jan. 2, 2014.
English machine translation of DE112010001135T5 published on Aug. 2, 2012.
English machine translation of DE202010018047U1 published on Nov. 14, 2013.
English machine translation of DE202010018084U1 published on Feb. 27, 2014.
English machine translation of DE202010018085U1 published on Feb. 27, 2014.
English machine translation of DE60201666T2 published on Aug. 1, 2006.
English machine translation of DE60211663T2 published on May 10, 2007.
English machine translation of DE69907201T2 published on Feb. 5, 2004.
English machine translation of JP2003135335A published on May 13, 2003.
English machine translation of JP2005040246A published on Feb. 17, 2005.
English machine translation of JP2009261501A published on Nov. 12, 2009.
English machine translation of JP2010081968A published on Apr. 15, 2010.
English machine translation of KR1020010045598A published on Jun. 5, 2001.

(56) **References Cited**

OTHER PUBLICATIONS

English machine translation of KR1020020067489A published on Aug. 22, 2002.
English machine translation of KR1020020085478A published on Nov. 16, 2002.
English machine translation of KR1020040050174A published on Jun. 16, 2004.
English machine translation of KR1020060008365A published on Jan. 26, 2006.
English machine translation of KR1020060118795A published on Nov. 24, 2006.
English machine translation of KR1020060118800A published on Nov. 24, 2006.
English machine translation of KR1020060118802A published on Nov. 24, 2006.
English machine translation of KR1020060118803A published on Nov. 24, 2006.
English machine translation of KR1020060122249A published on Nov. 30, 2006.
English machine translation of KR1020060125952A published on Dec. 7, 2006.
English machine translation of KR1020060125954A published on Dec. 7, 2006.
English machine translation of KR1020100084127A published on Jul. 23, 2010.
English machine translation of NL10681C published on Nov. 17, 1923.
English machine translation of WO2008035032A2 published on Mar. 27, 2008.

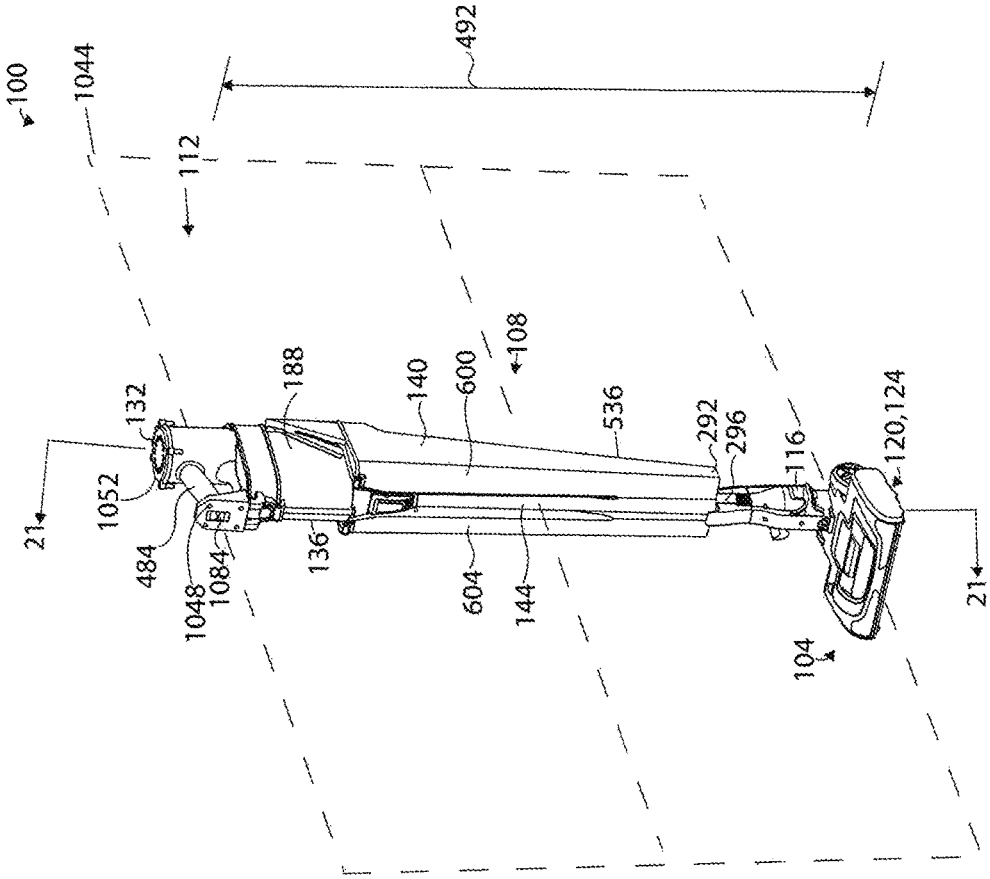
100
1044
492
112
21
132
1052
484
1048
1084
188
136
140
600
108
604
144
536
292
296
116
120,124
104
21

FIG. 1

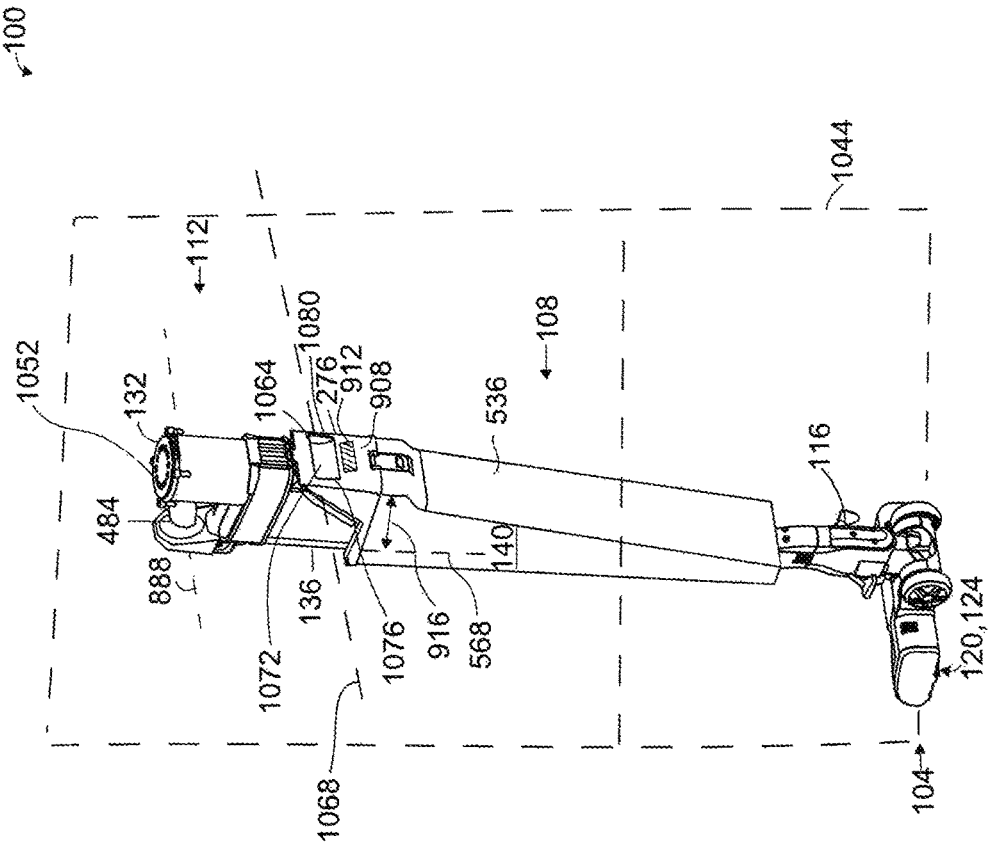
100
1052
132
484
888
112
1064
1080
276
912
908
1072
136
1076
916
568
140
536
108
1068
1044
116
120,124
104

FIG. 2

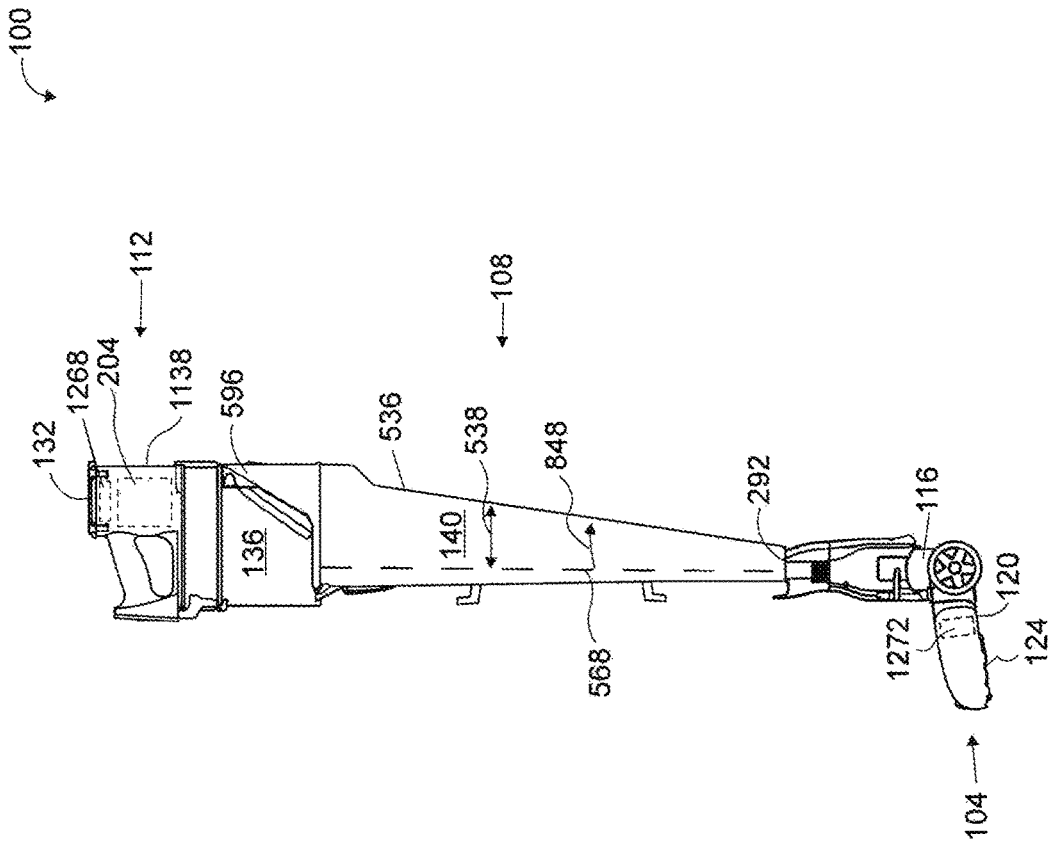
100
112
108
132
1268
204
1138
596
536
538
848
292
116
120
124
1272
136
140
568
104

FIG. 3

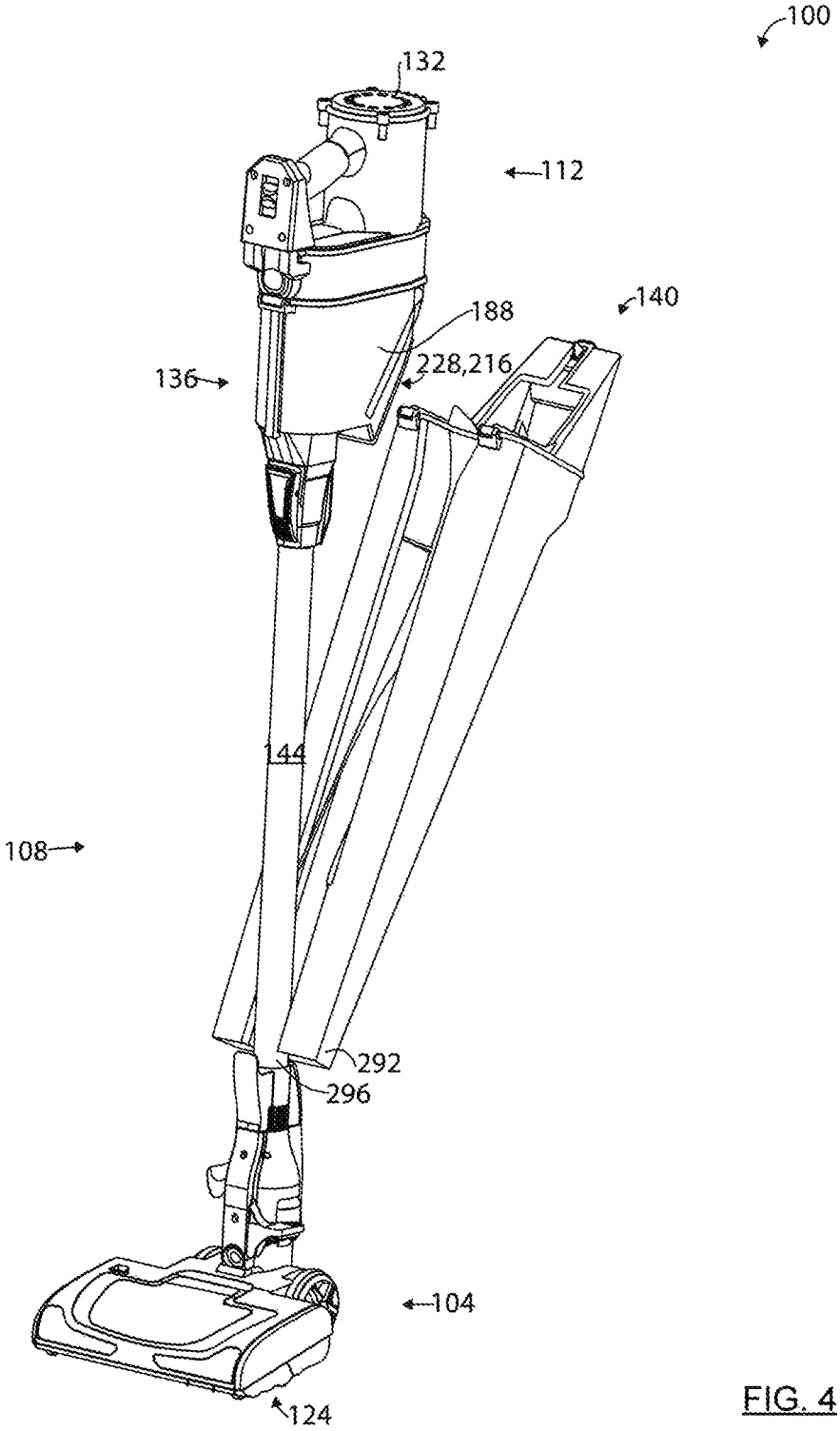

FIG. 4

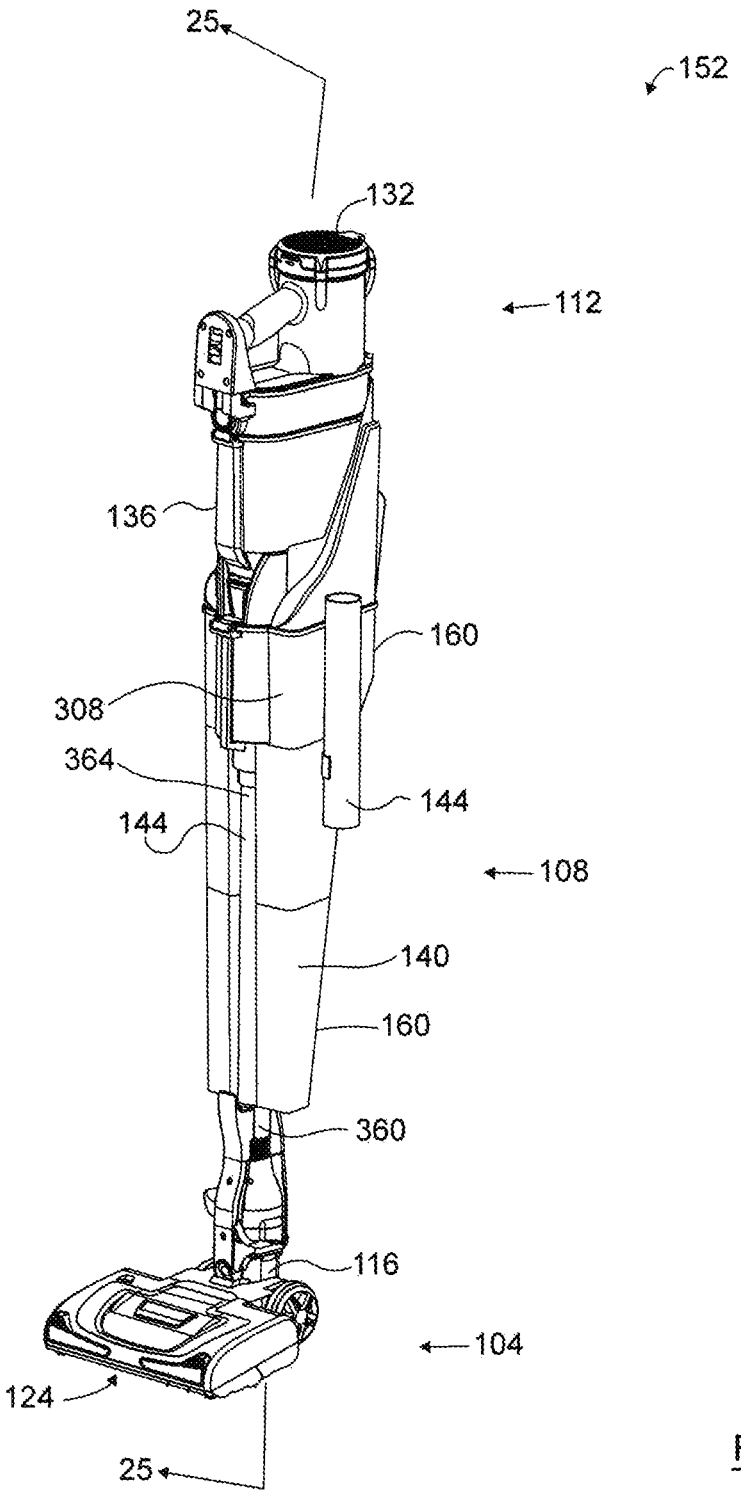
25
152
132
112
136
160
308
364
144
144
108
140
160
360
116
104
124
25

FIG. 5

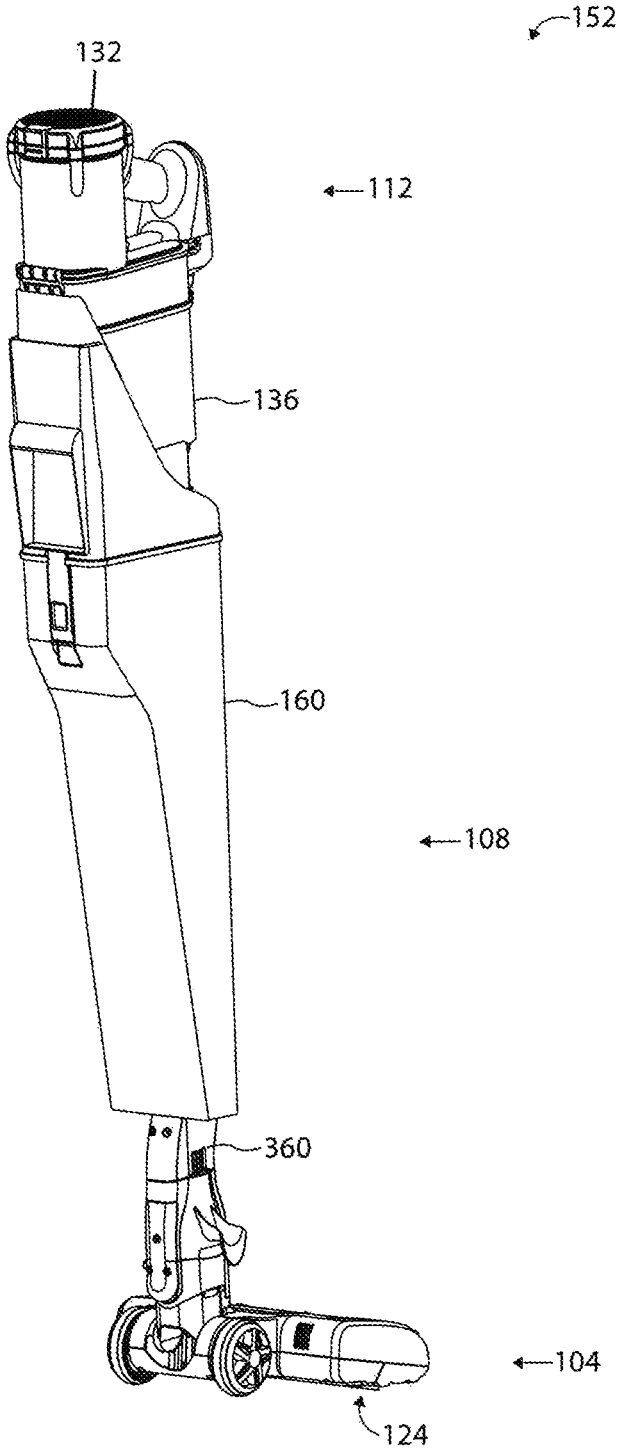

FIG. 6

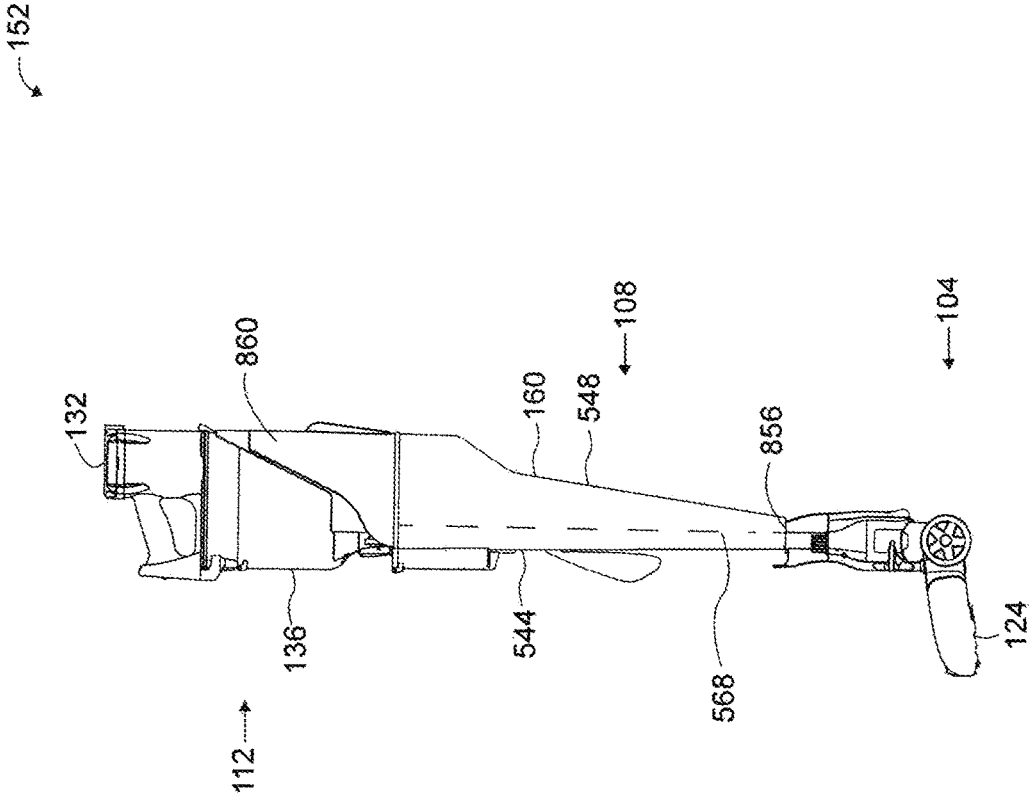

FIG. 7

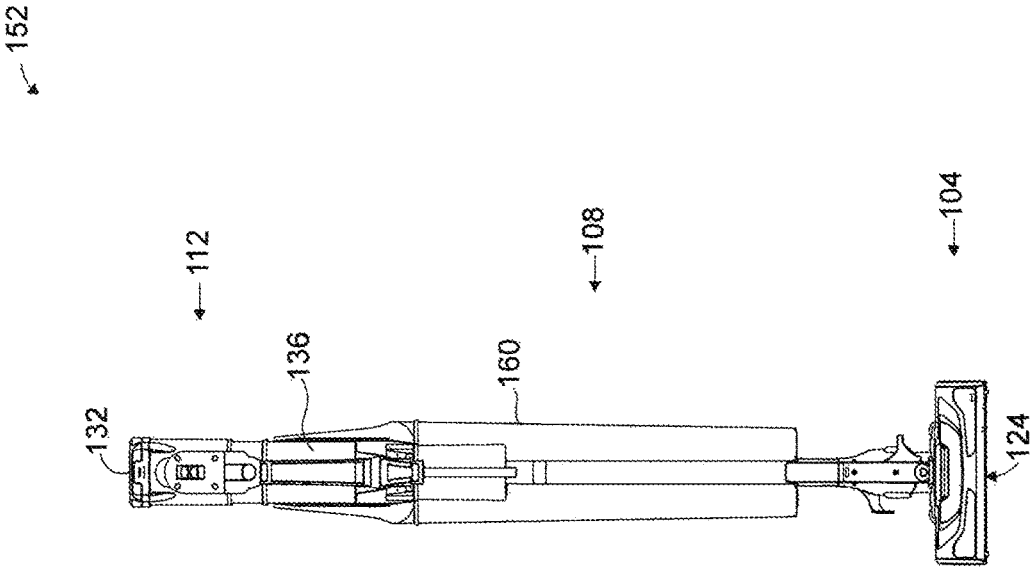

FIG. 8

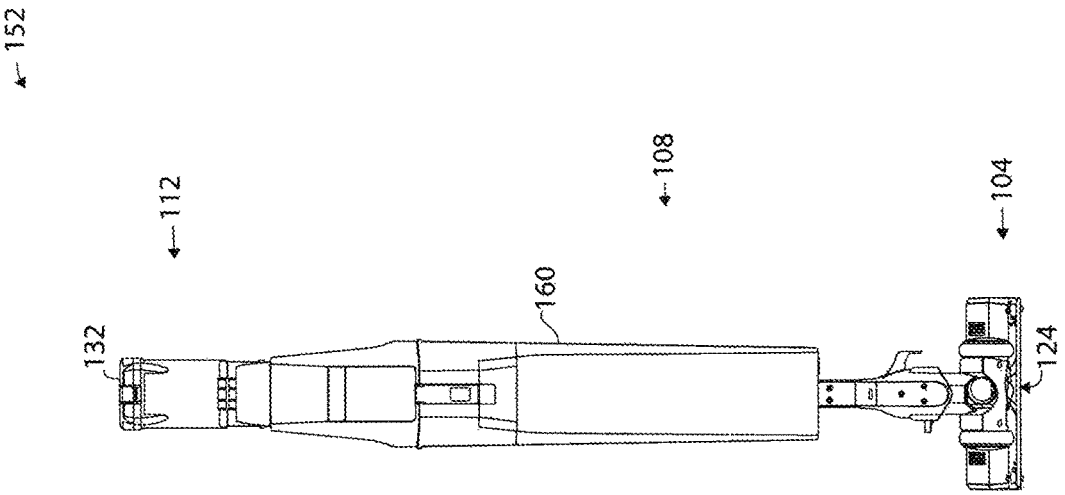

FIG. 9

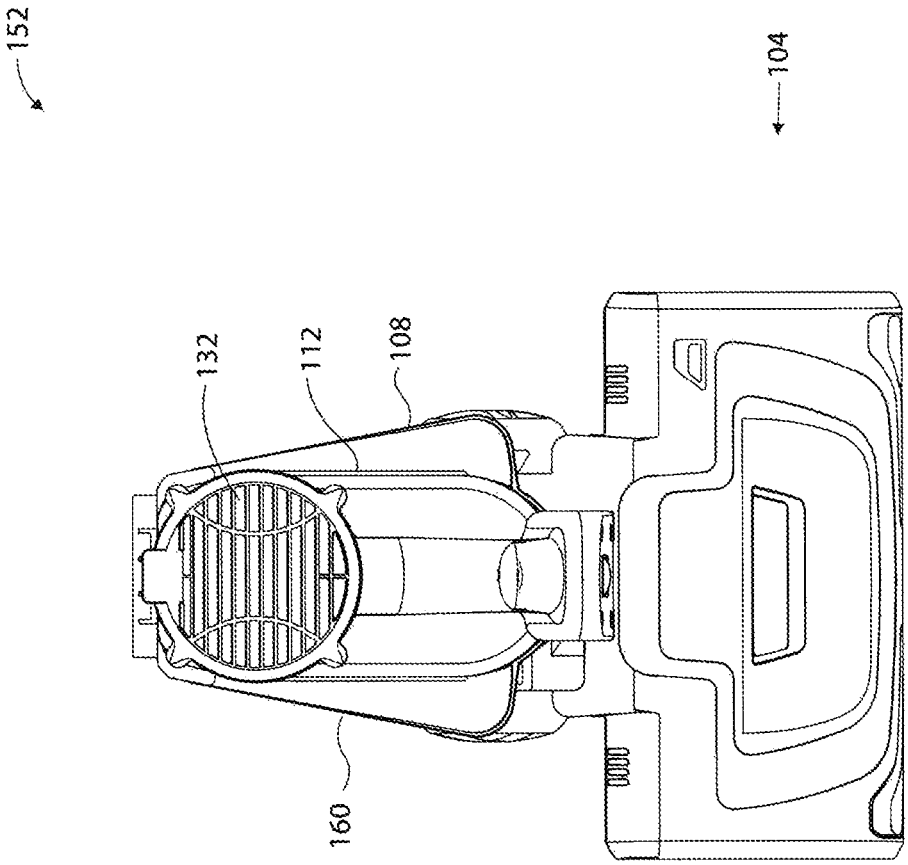

FIG. 10

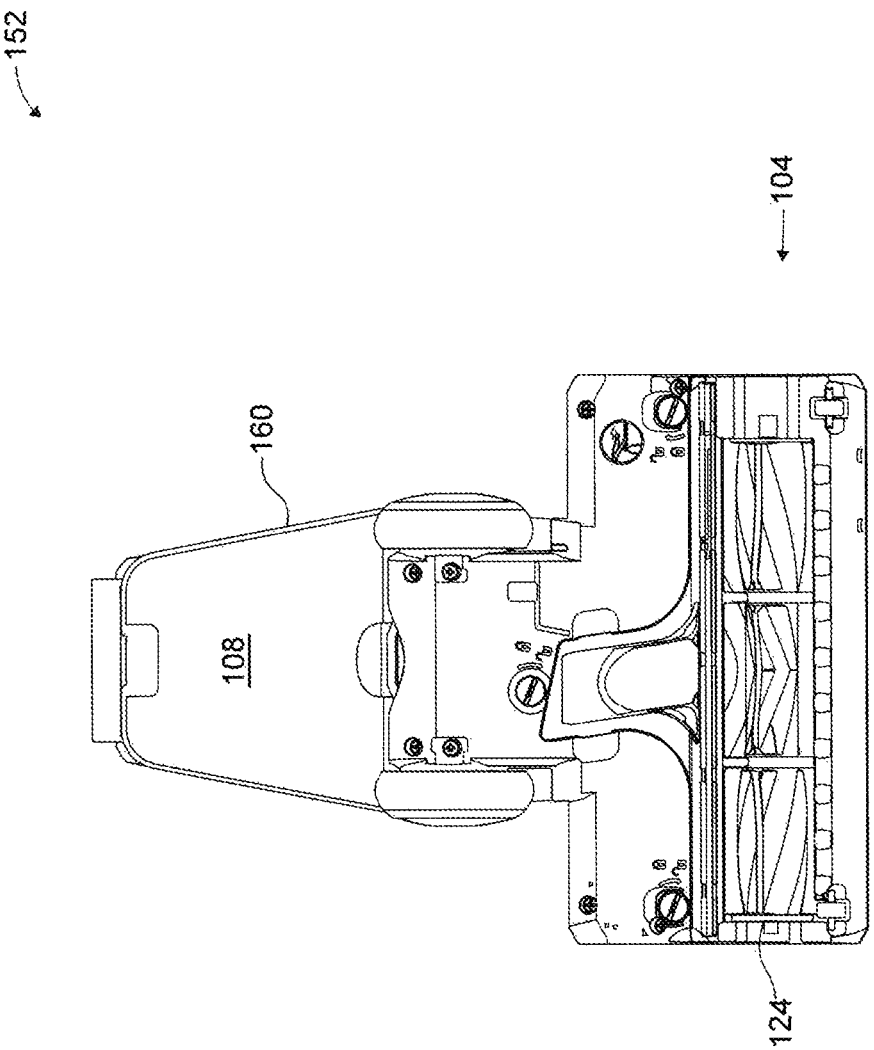

FIG. 11

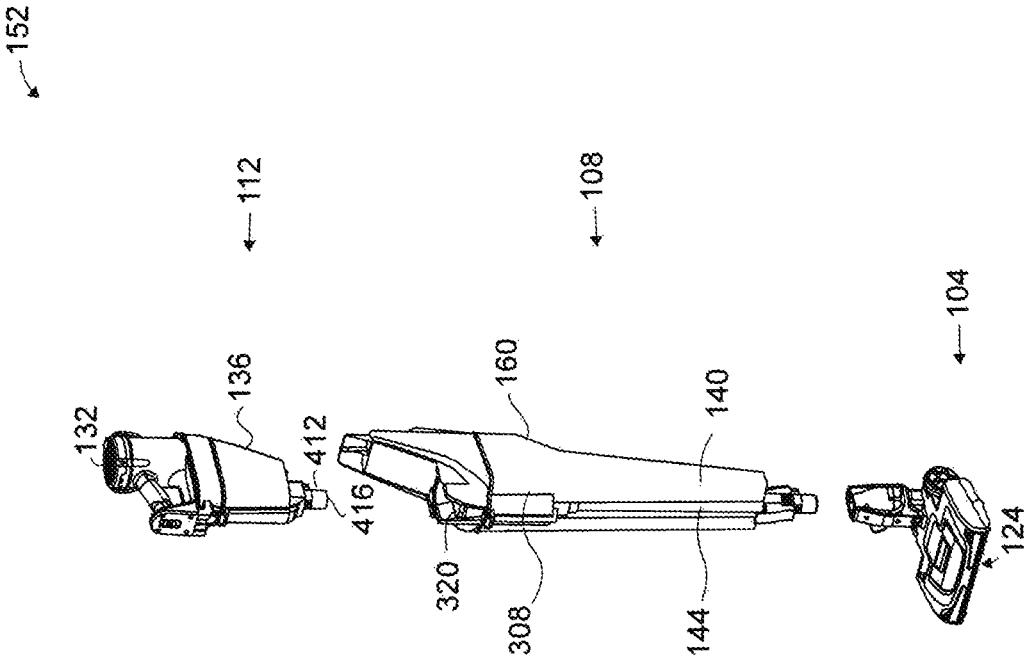

FIG. 12

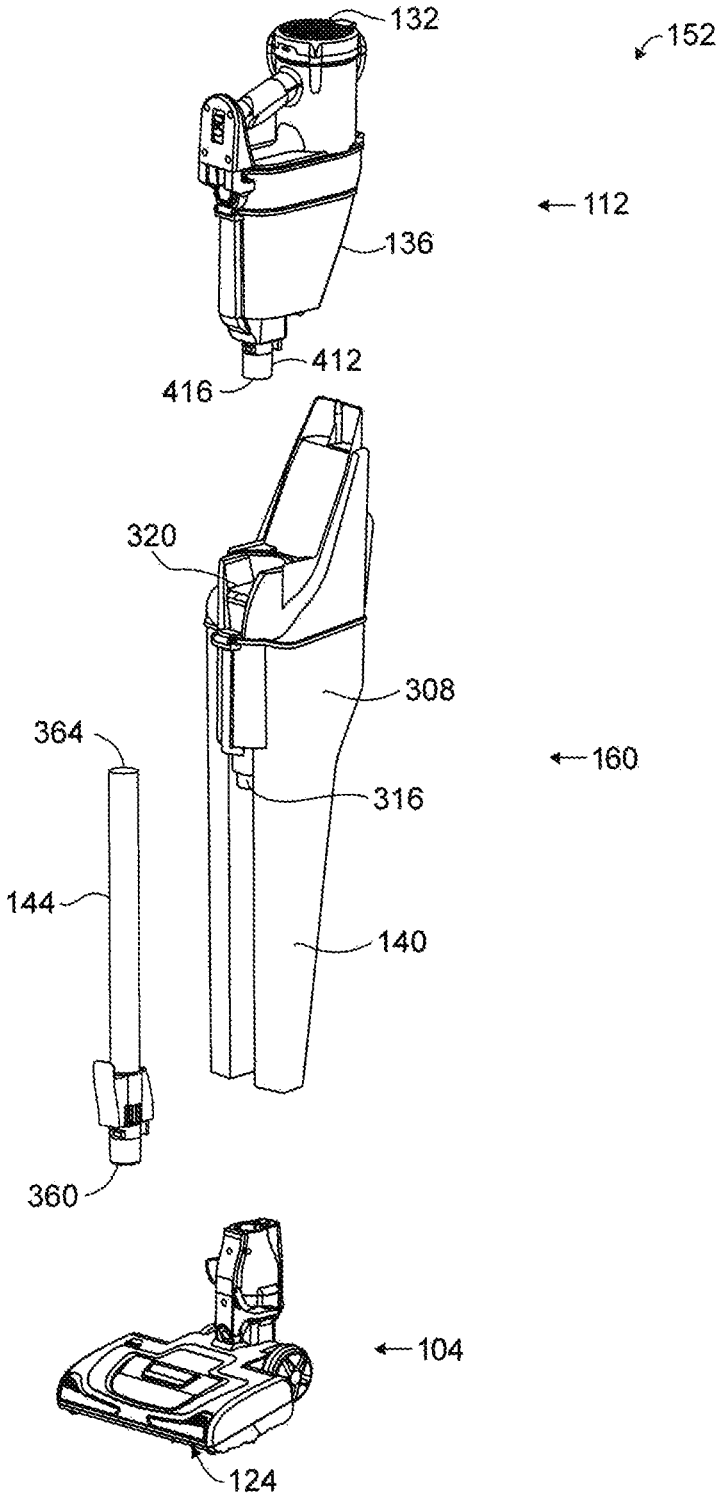

FIG. 12a

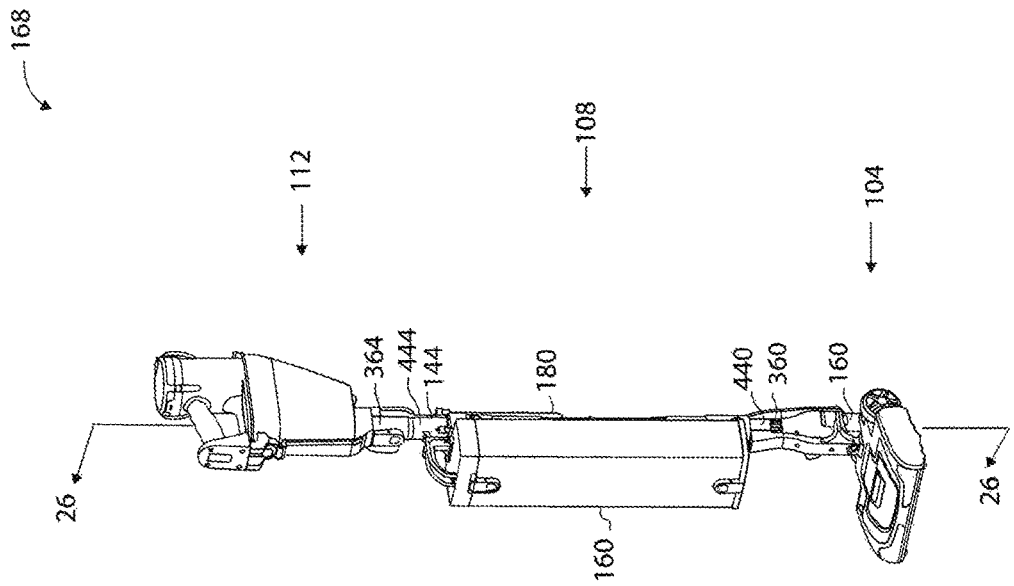

FIG. 13

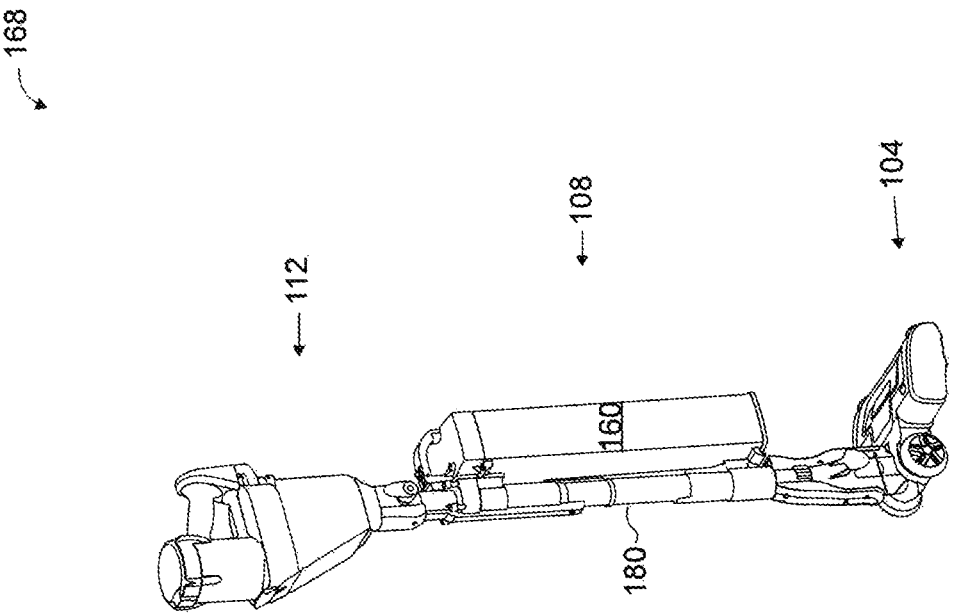

FIG. 14

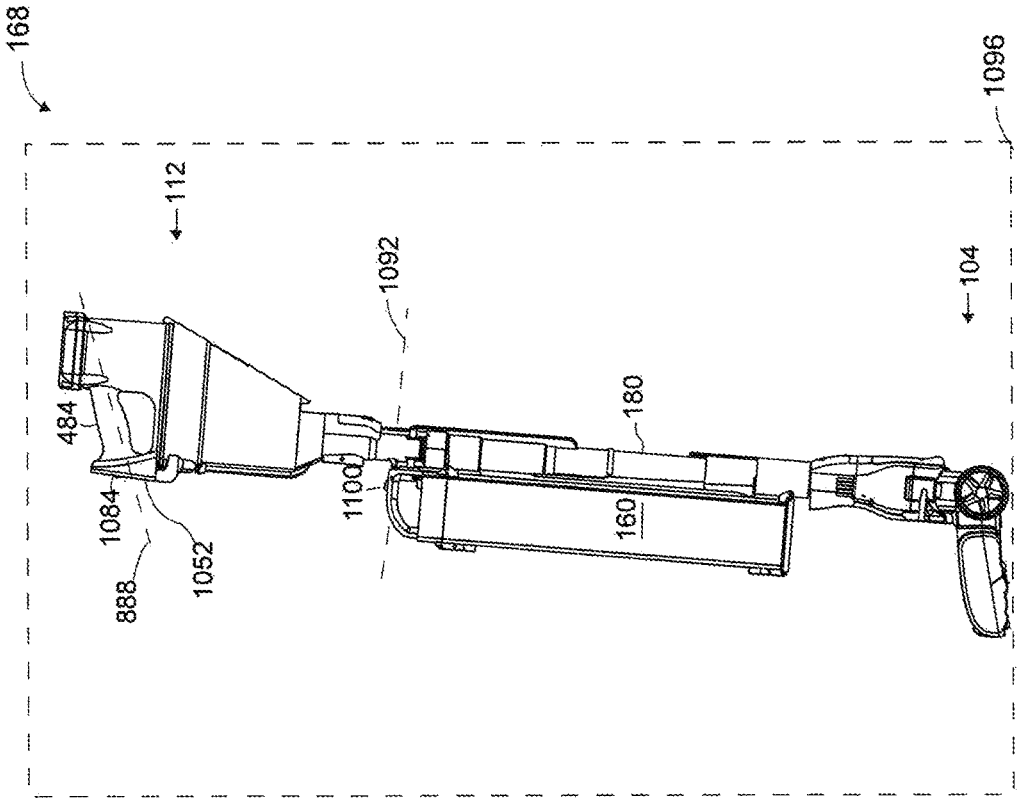

FIG. 15

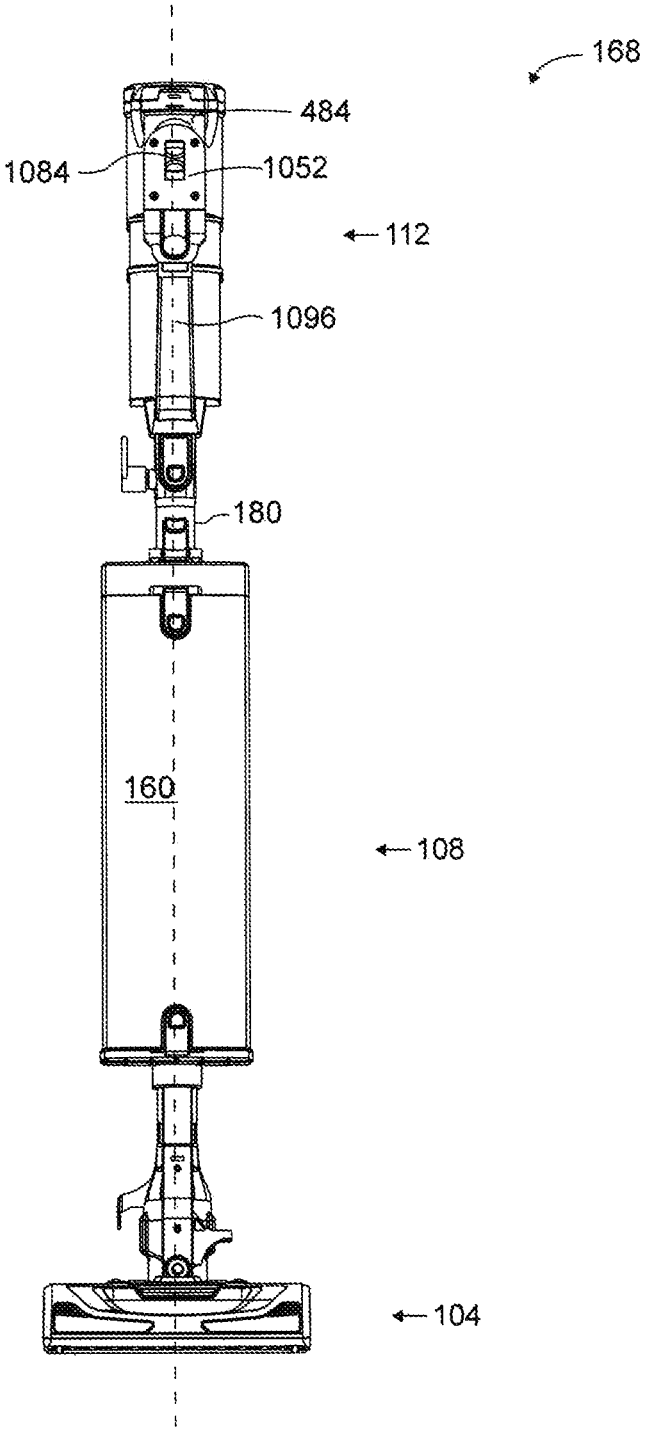

FIG. 16

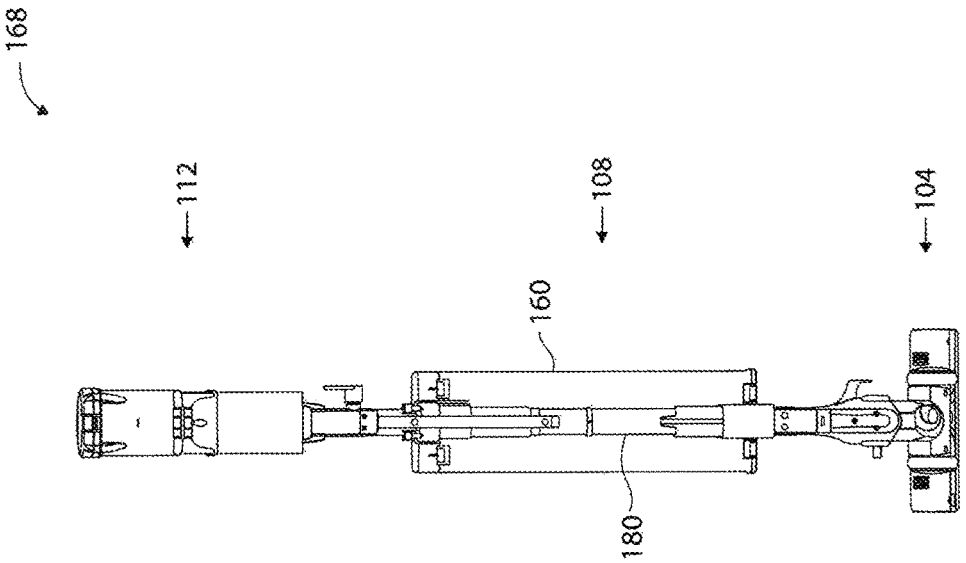

FIG. 17

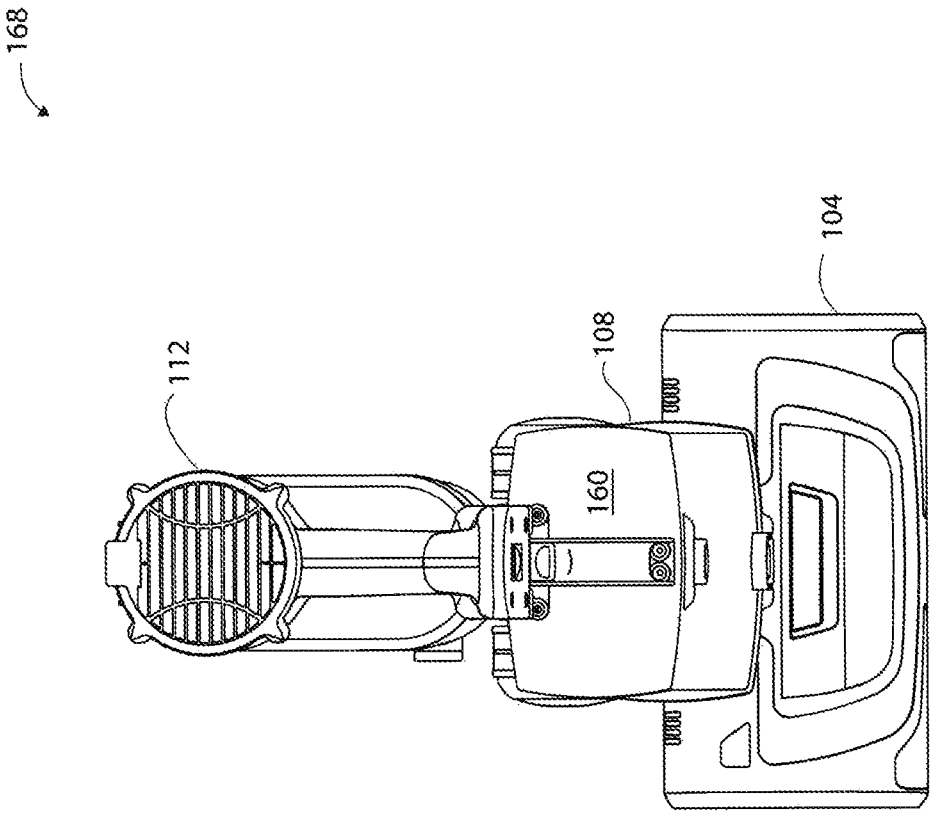

FIG. 18

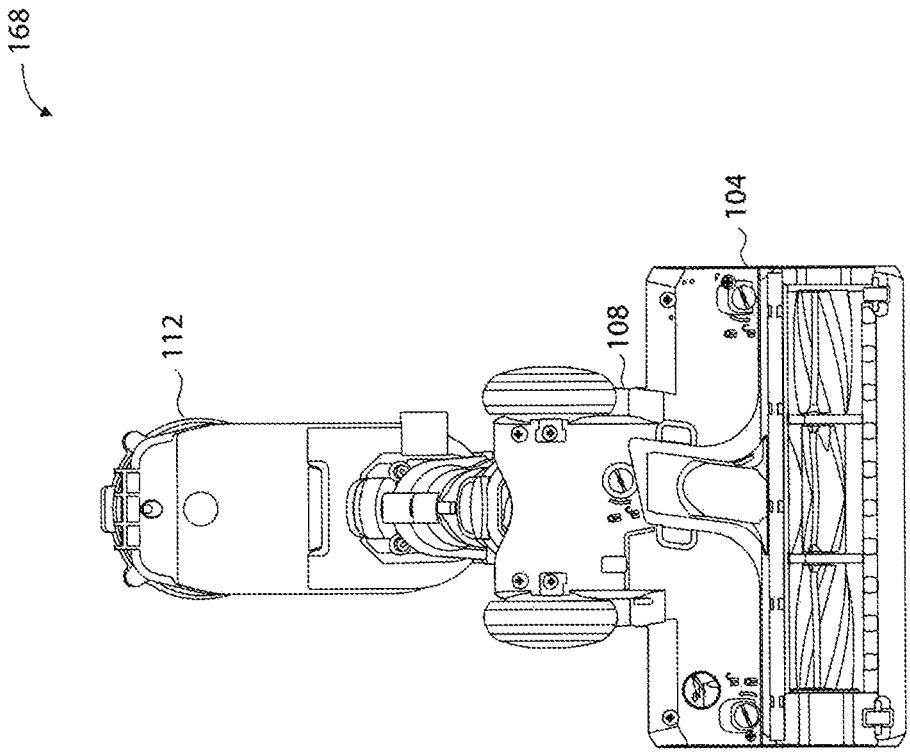

FIG. 19

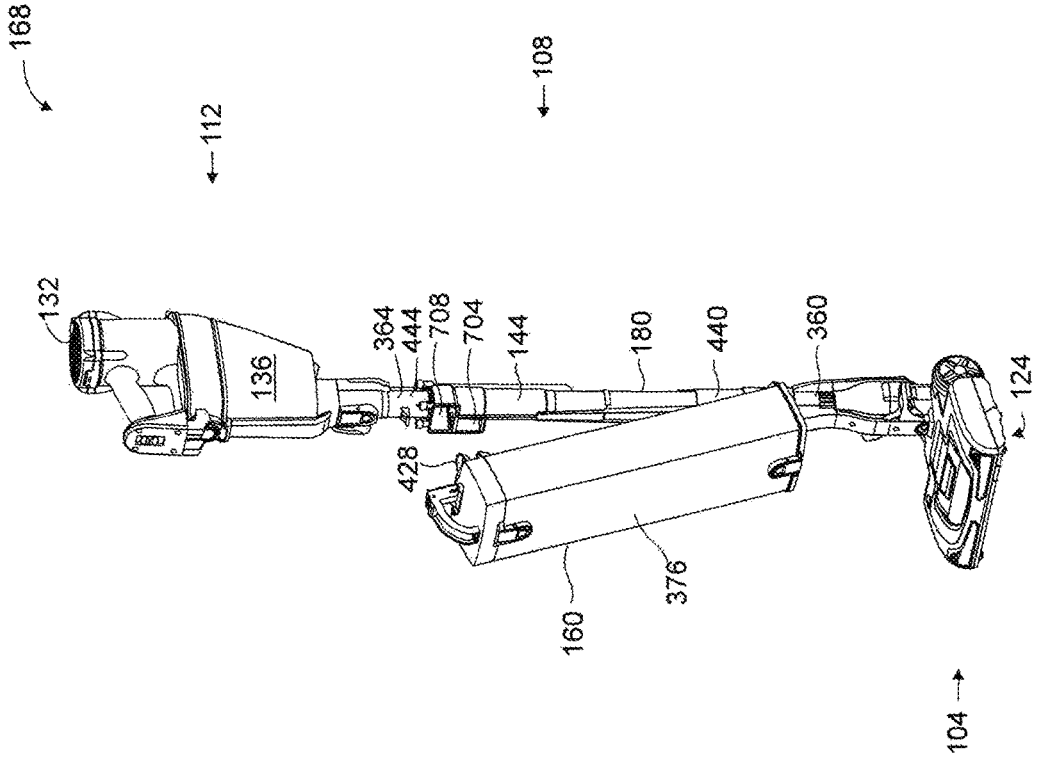
168
112
108
132
136
364
444
708
704
144
180
440
360
124
428
160
376
104

FIG. 20

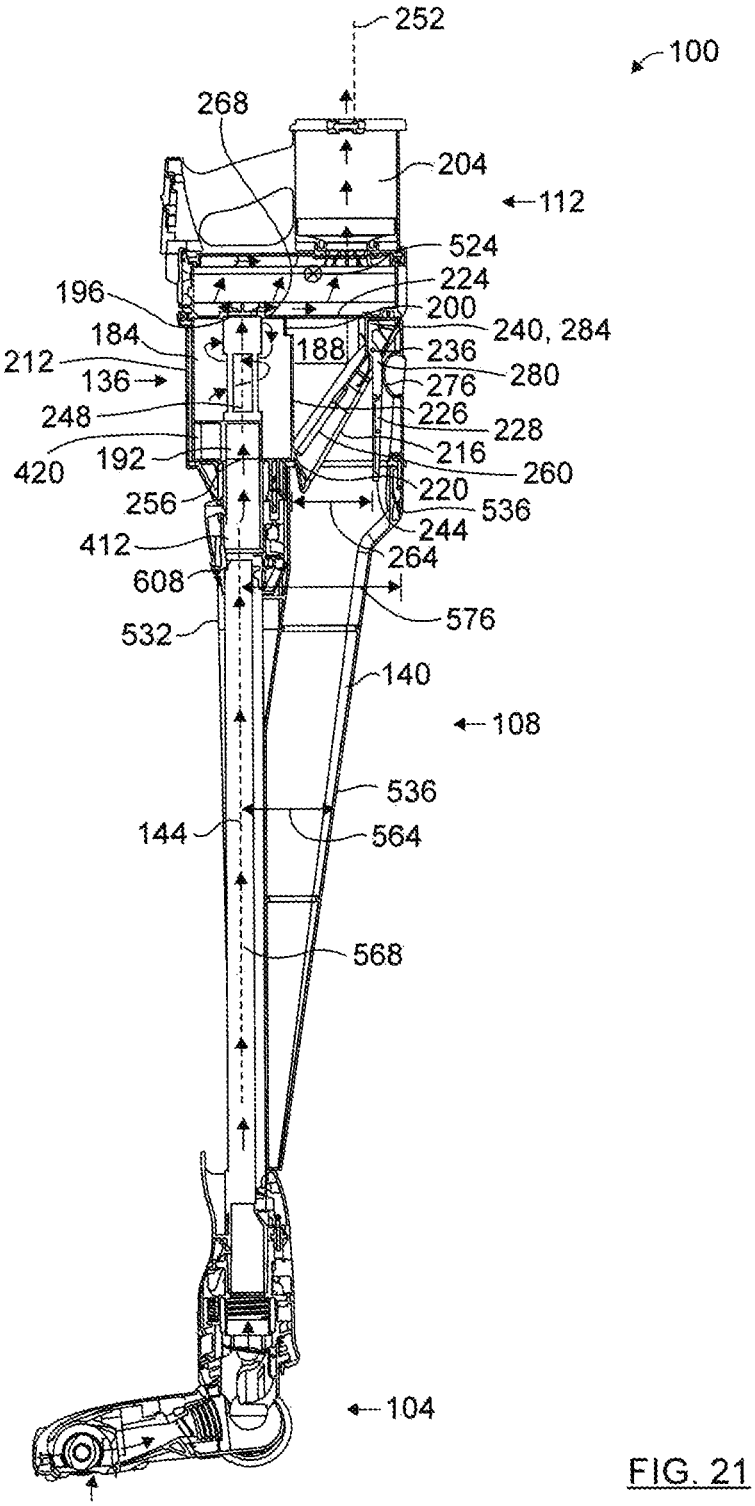
252
100
268
204
112
524
224
196
200
240, 284
184
188
236
212
280
136
276
248
226
228
216
420
192
260
220
256
536
244
412
264
608
576
532
140
108
536
144
564
568
104

FIG. 21

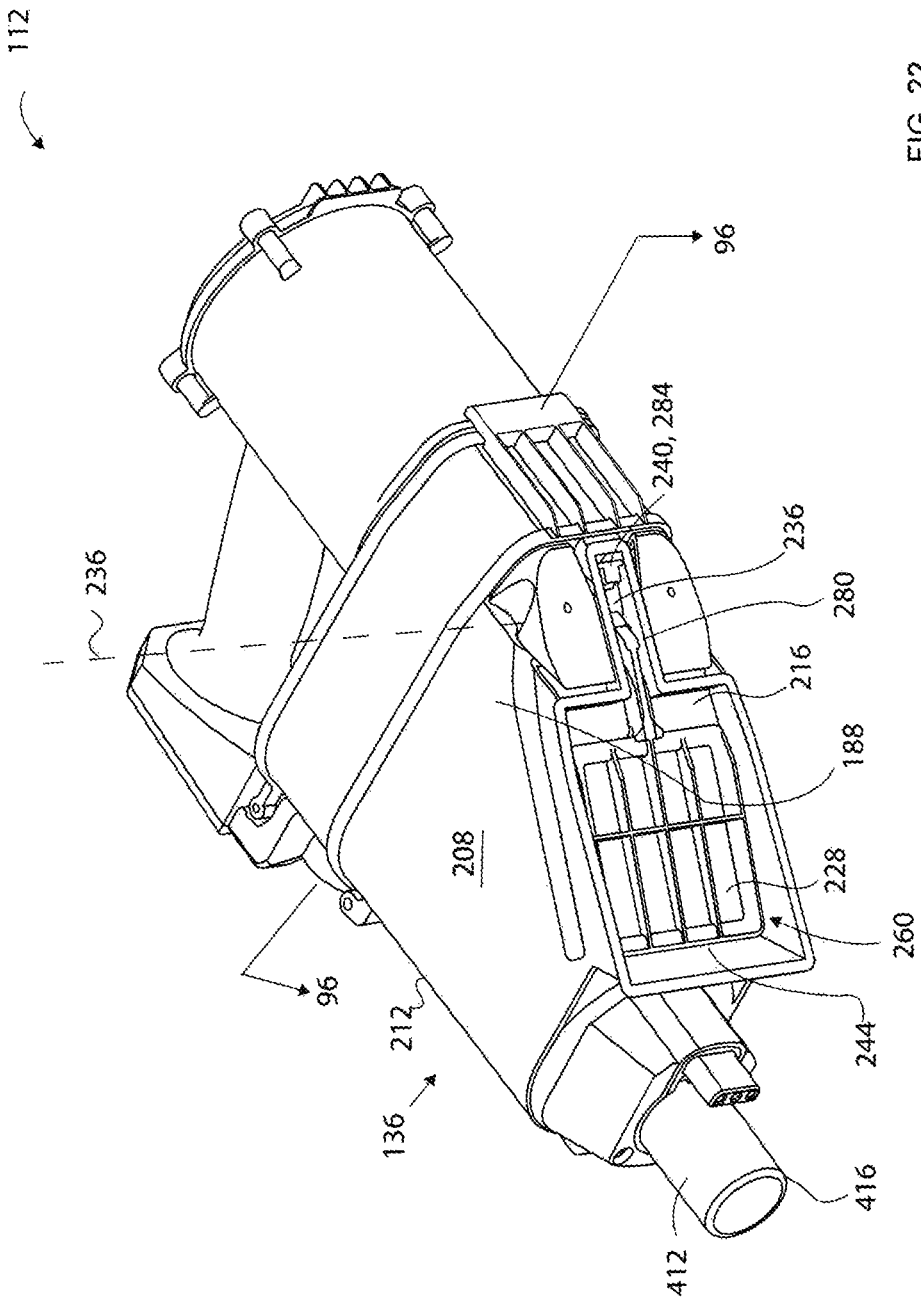
112
236
96
240, 284
236
280
216
188
208
228
260
244
96
212
136
416
412

FIG. 22

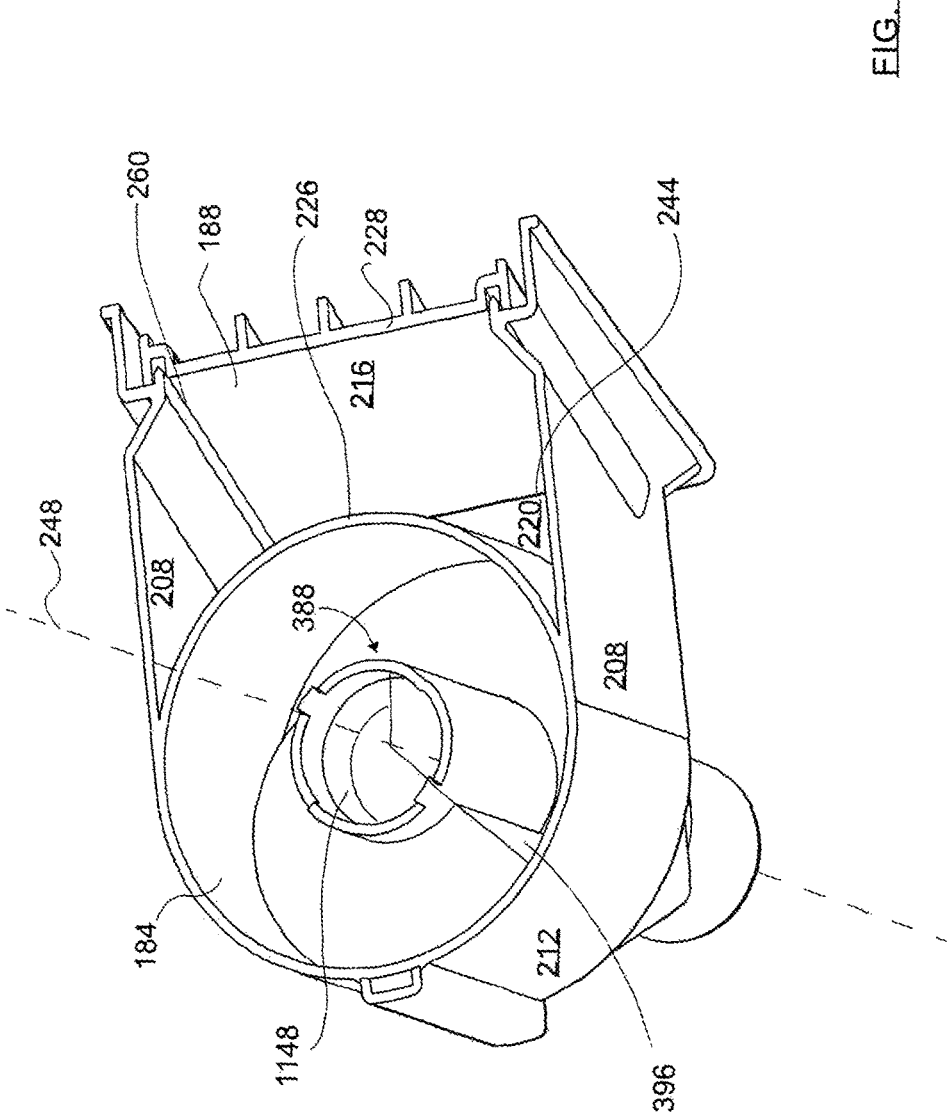

FIG. 23

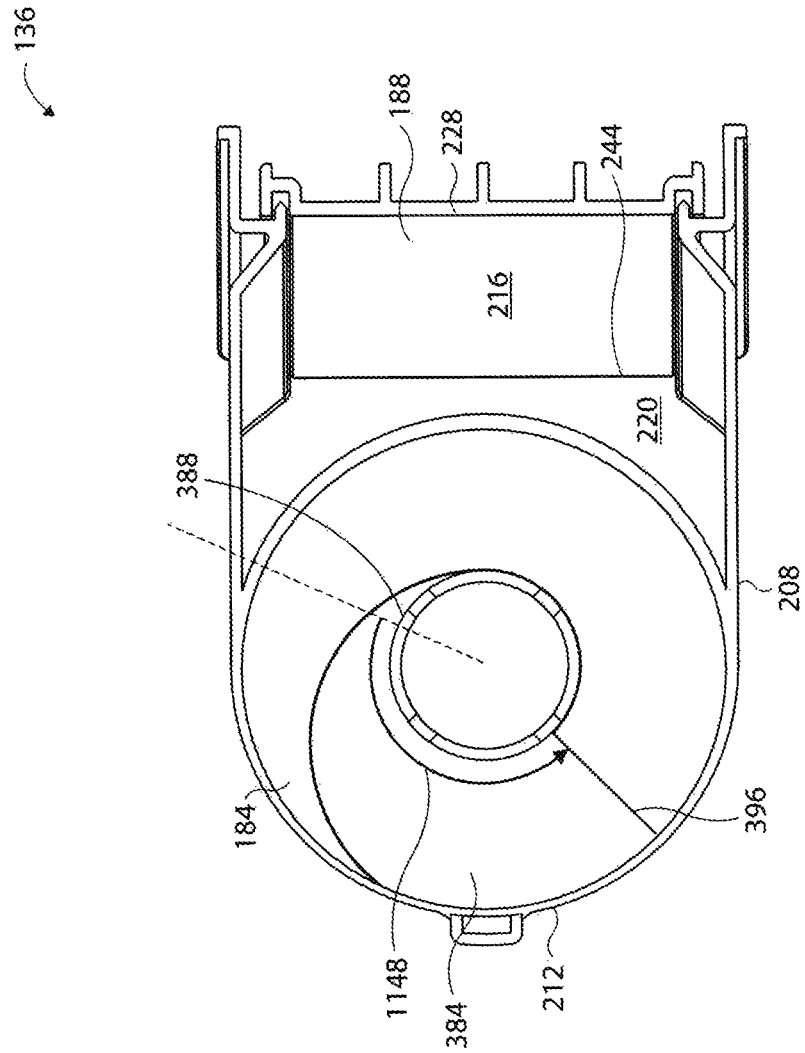

FIG. 23a

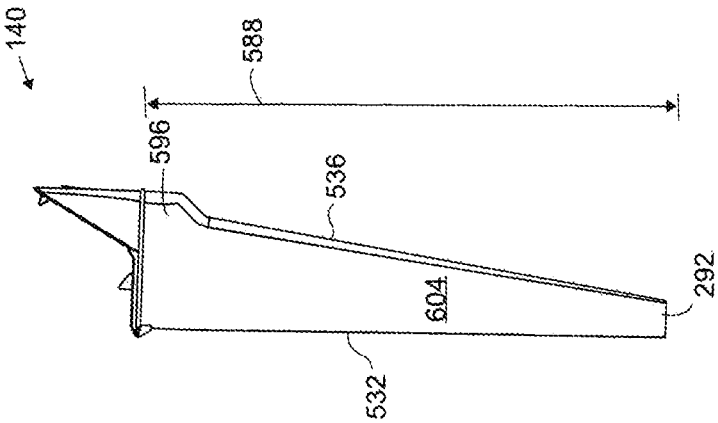

FIG. 46

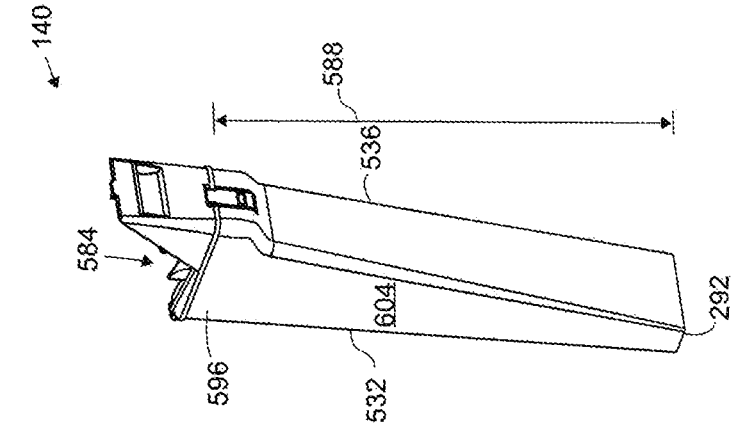

FIG. 45

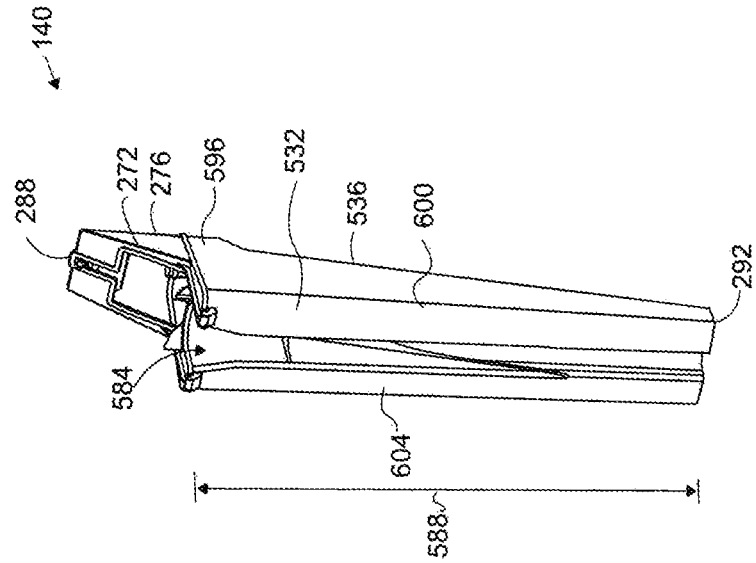

FIG. 24

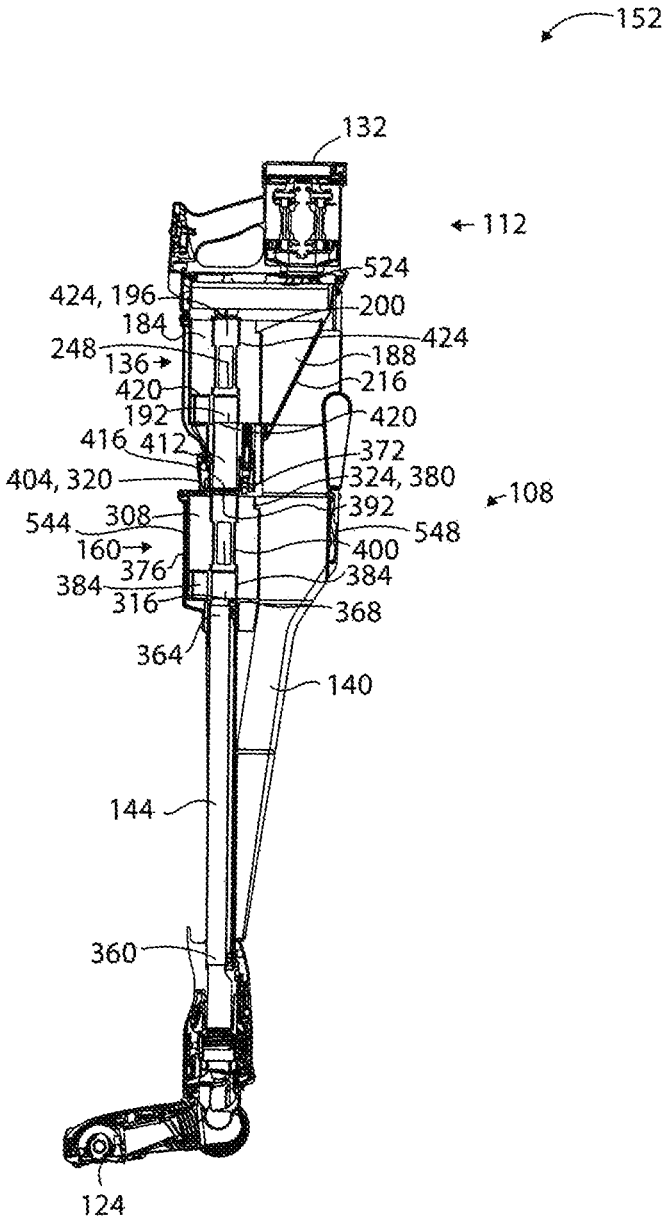
152
132
112
524
424, 196
200
184
424
248
188
136
216
420
192
420
416
412
372
404, 320
324, 380
108
392
544
308
548
160
400
376
384
384
316
368
364
140
144
360
124

FIG. 25

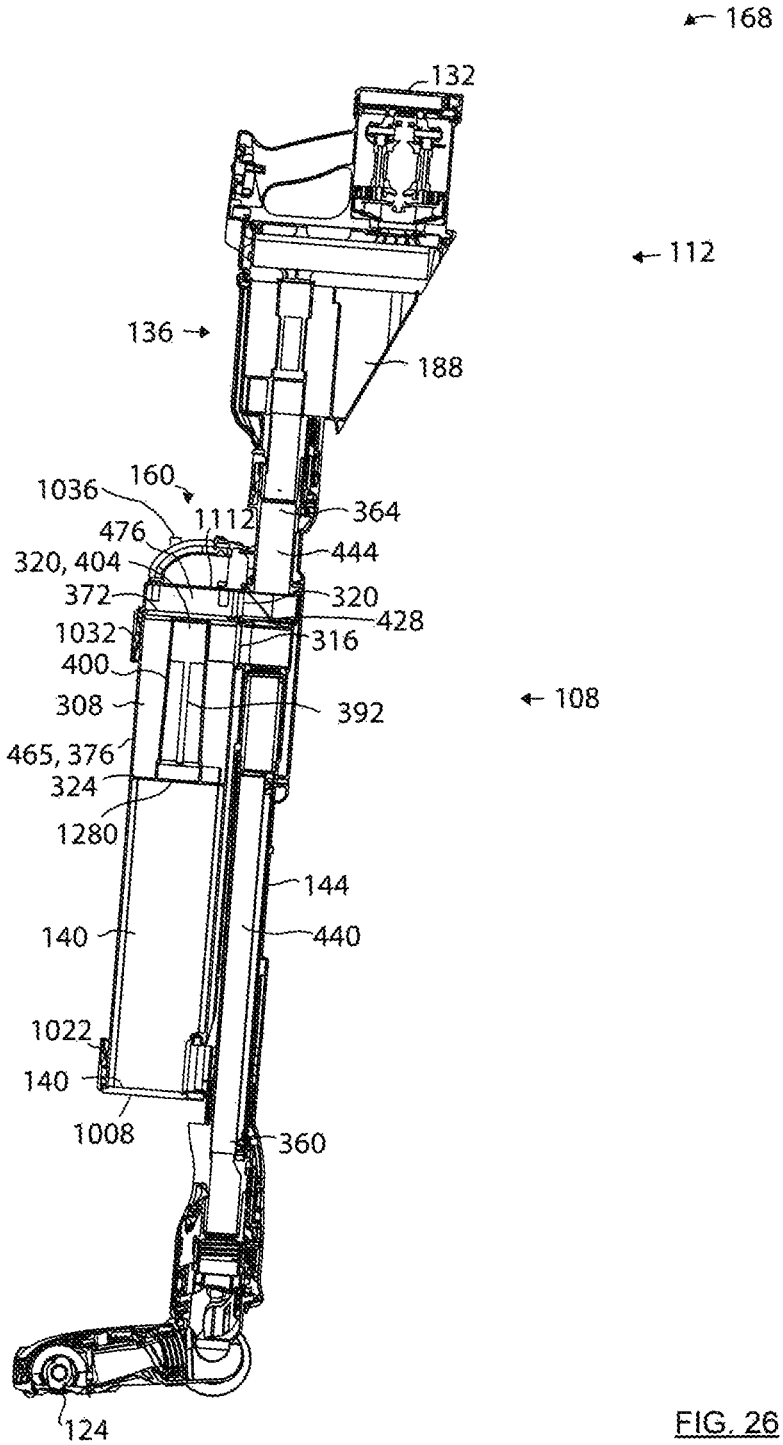
168
132
112
136
188
160
1036
1112
364
476
444
320, 404
372
320
428
1032
316
400
308
392
108
465, 376
324
1280
144
140
440
1022
140
1008
360
124

FIG. 26

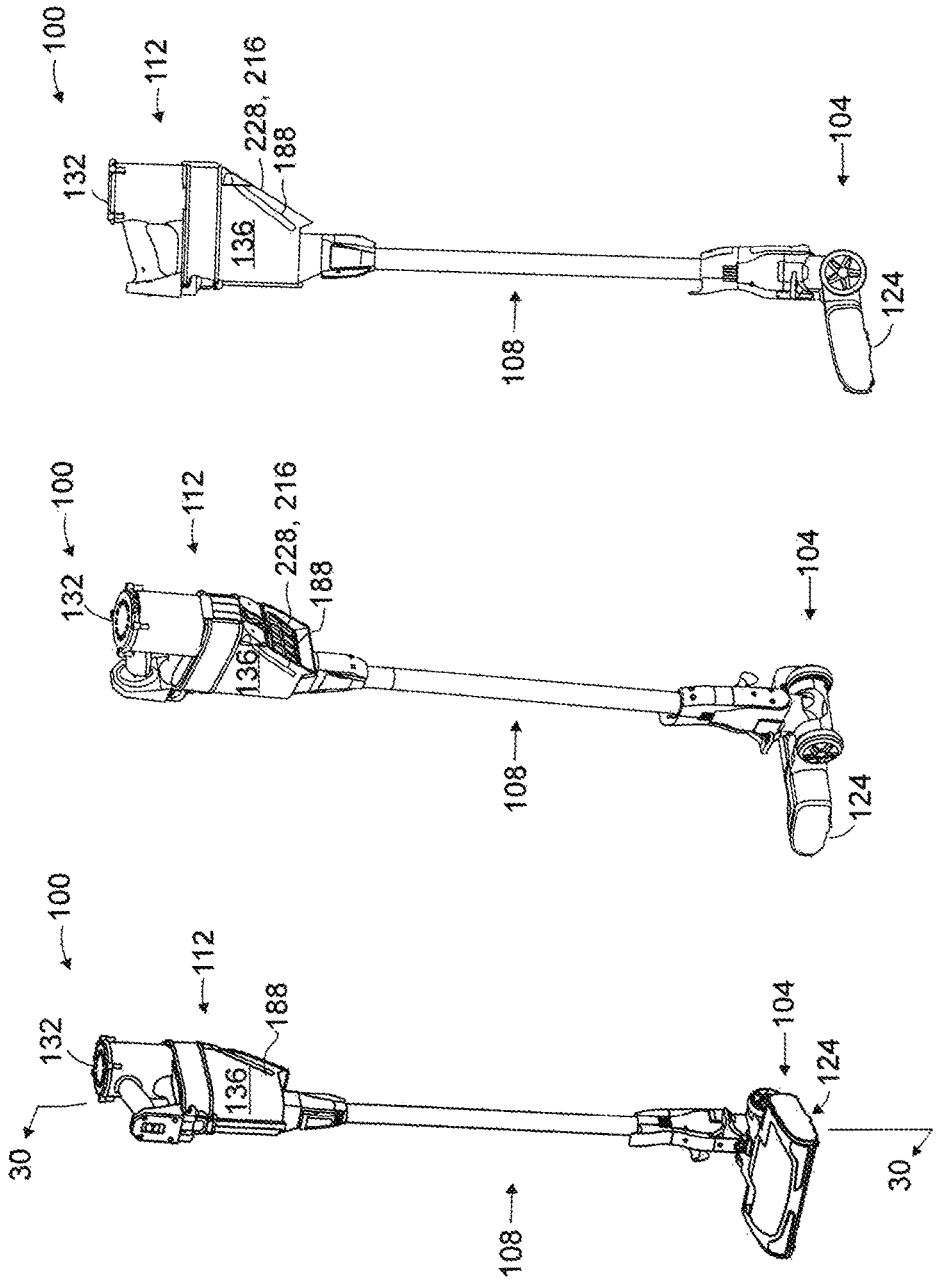

FIG. 29

FIG. 28

FIG. 27

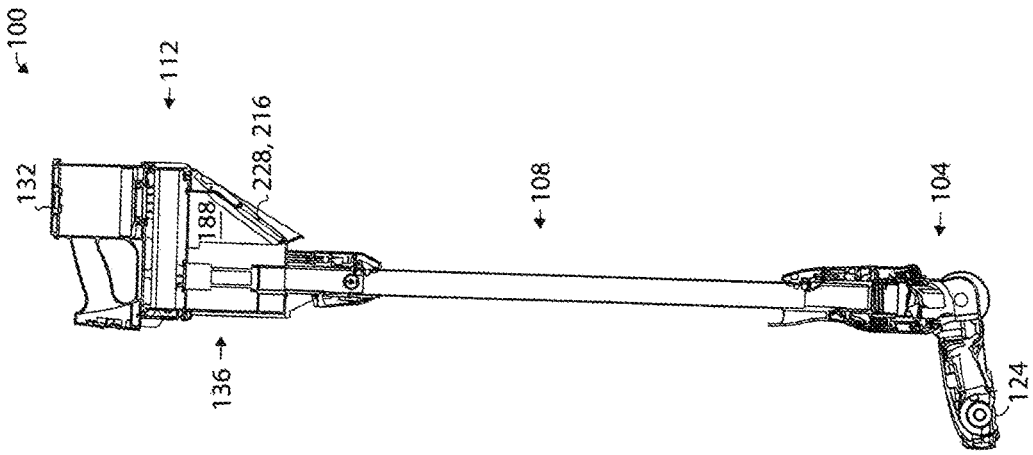

FIG. 30

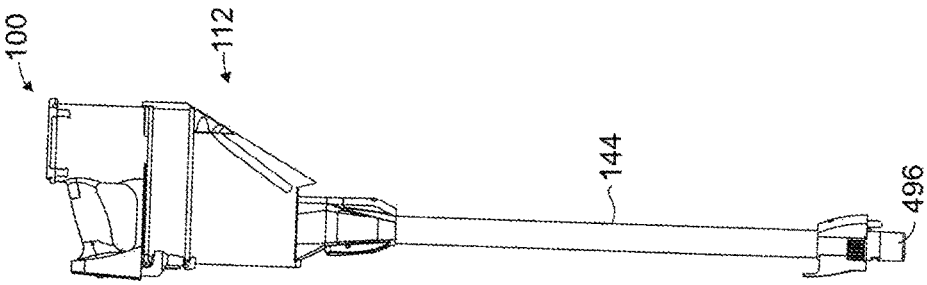

FIG. 33

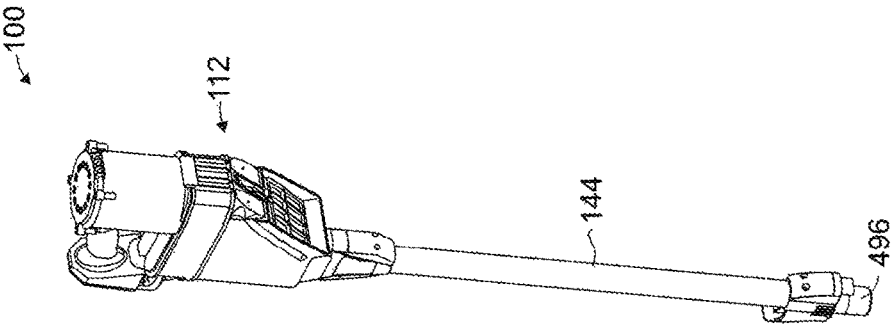

FIG. 32

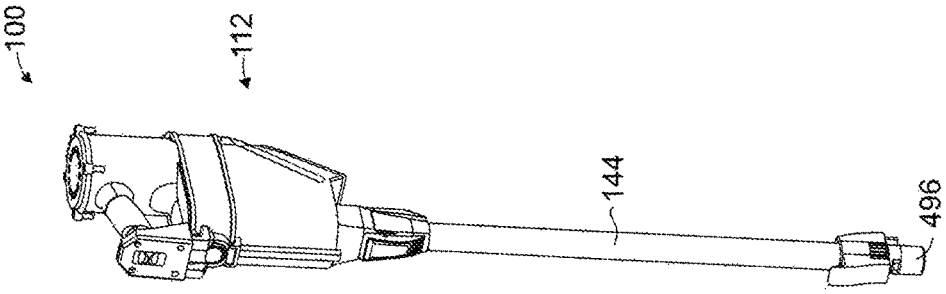

FIG. 31

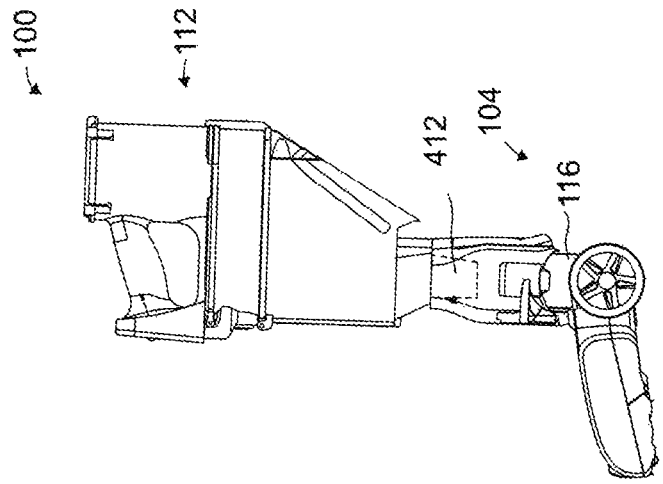

FIG. 36

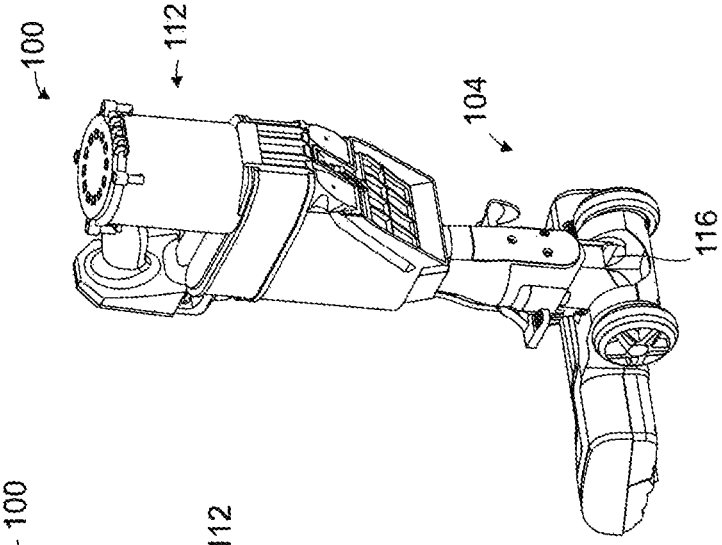

FIG. 35

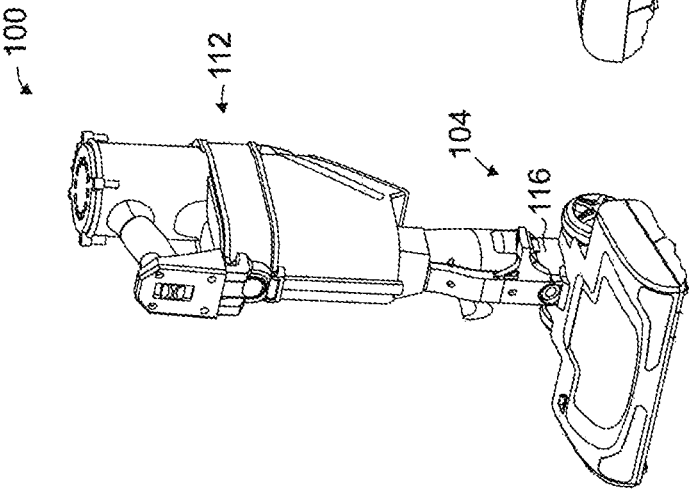

FIG. 34

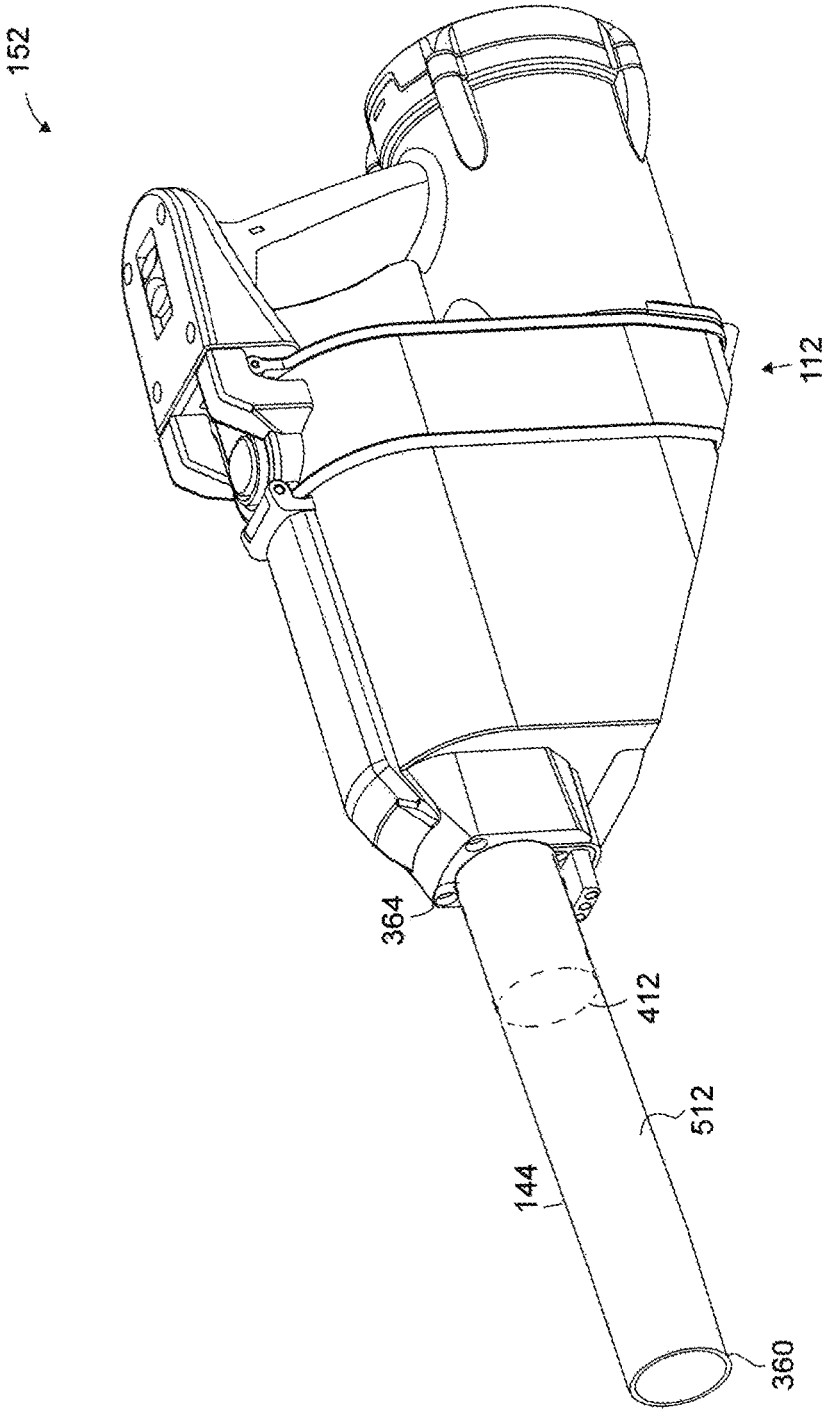

FIG. 36a

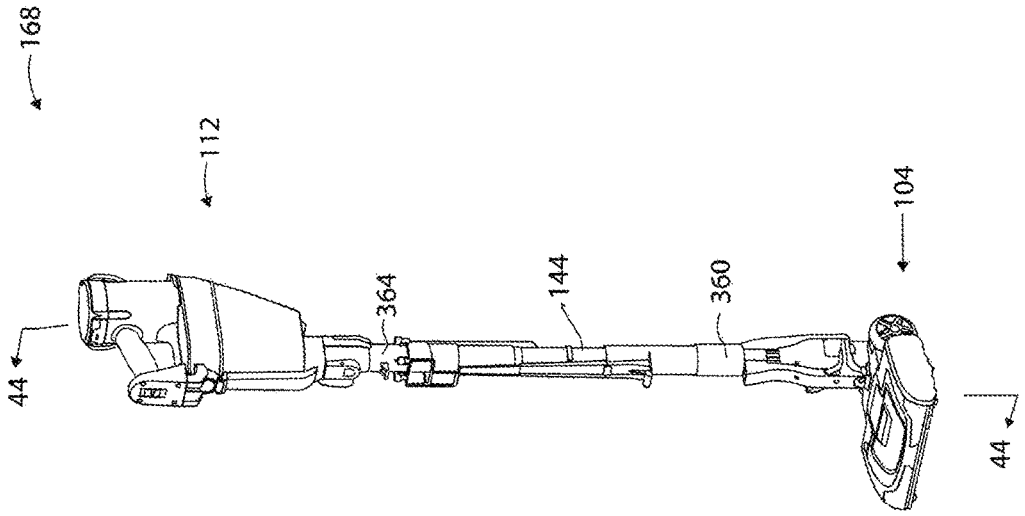

FIG. 37

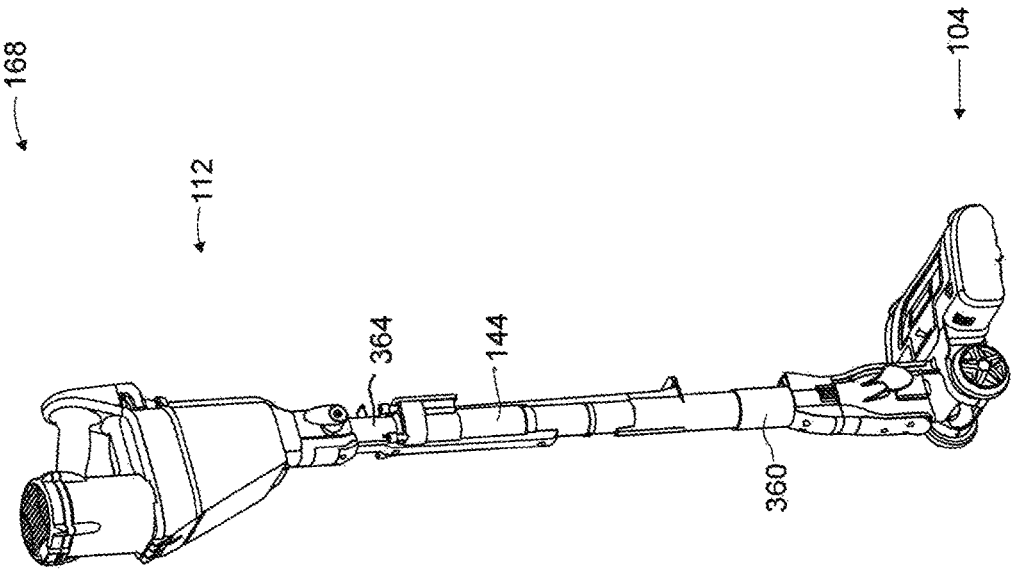

FIG. 38

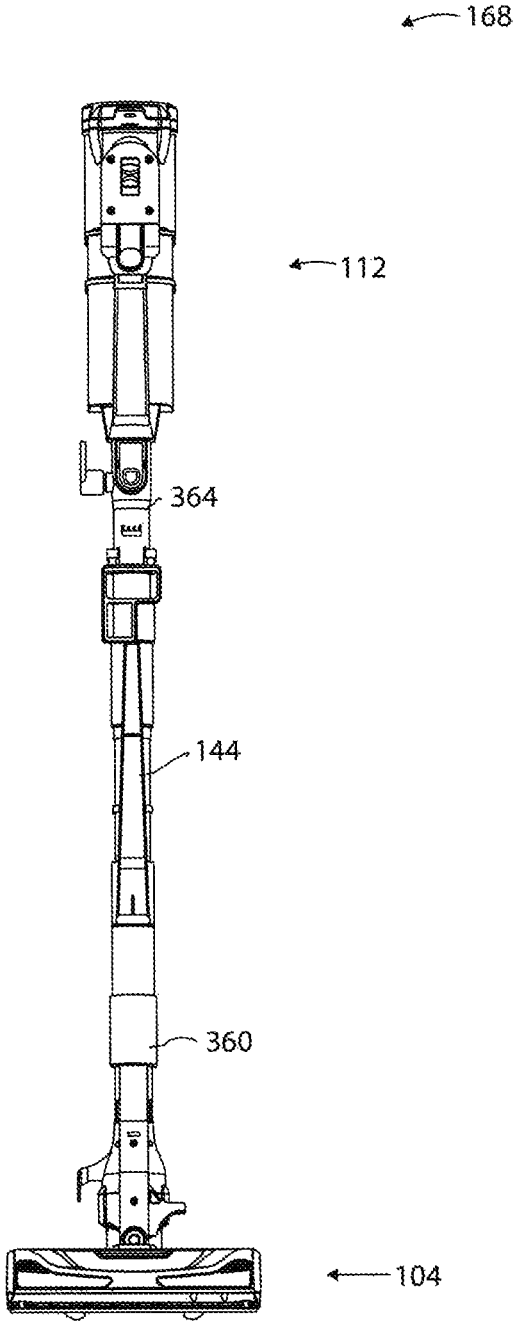

FIG. 39

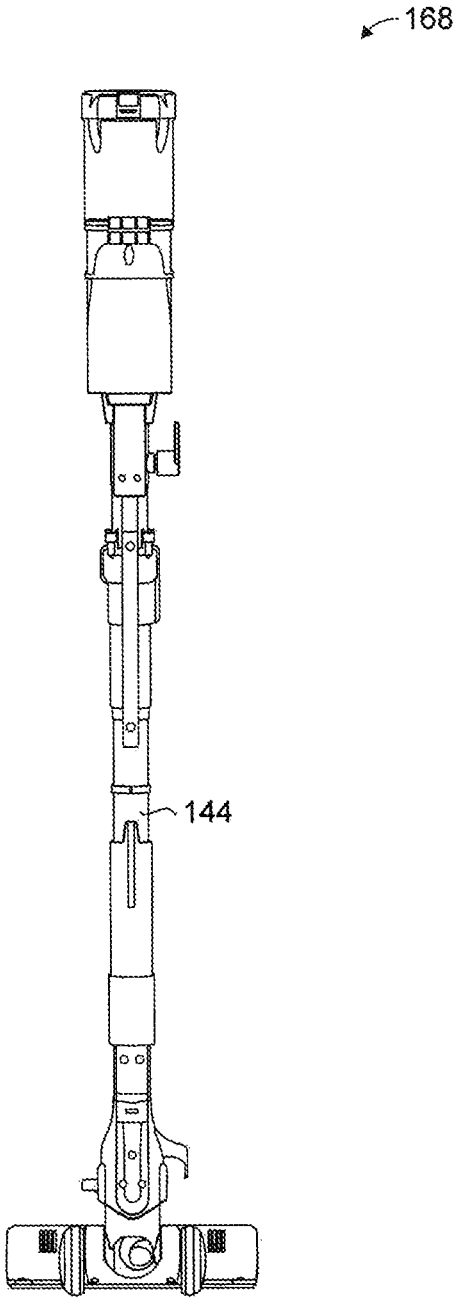

FIG. 40

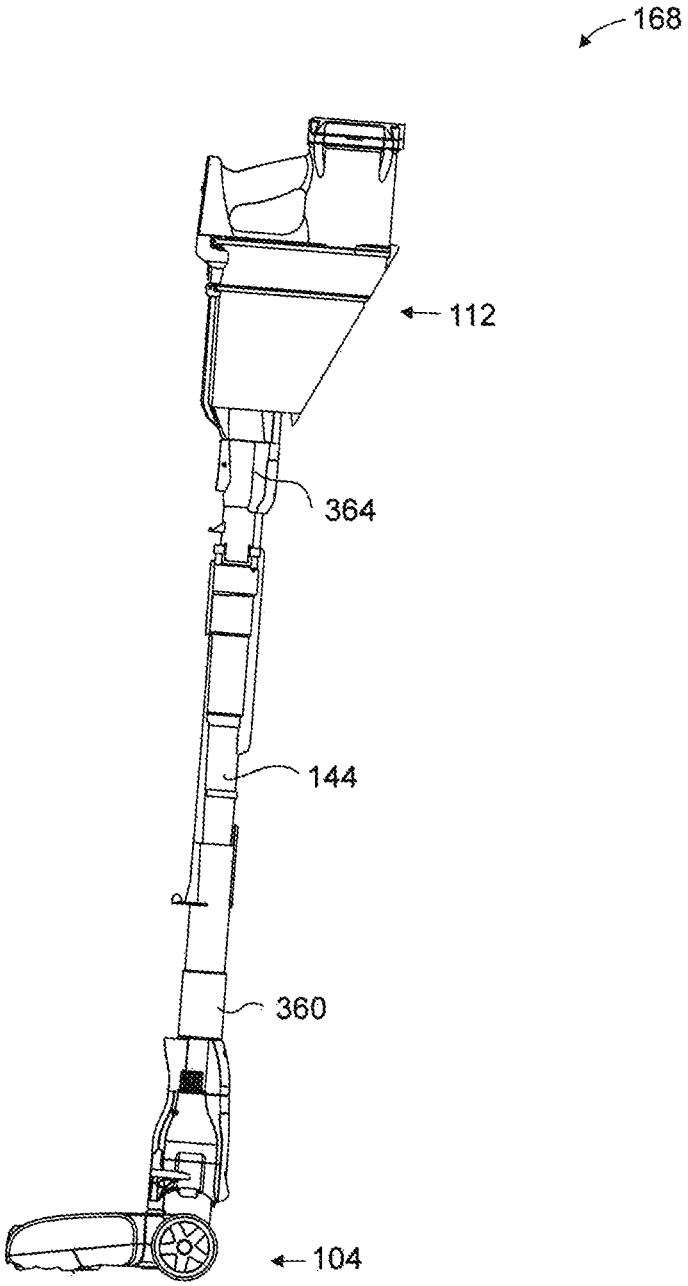

FIG. 41

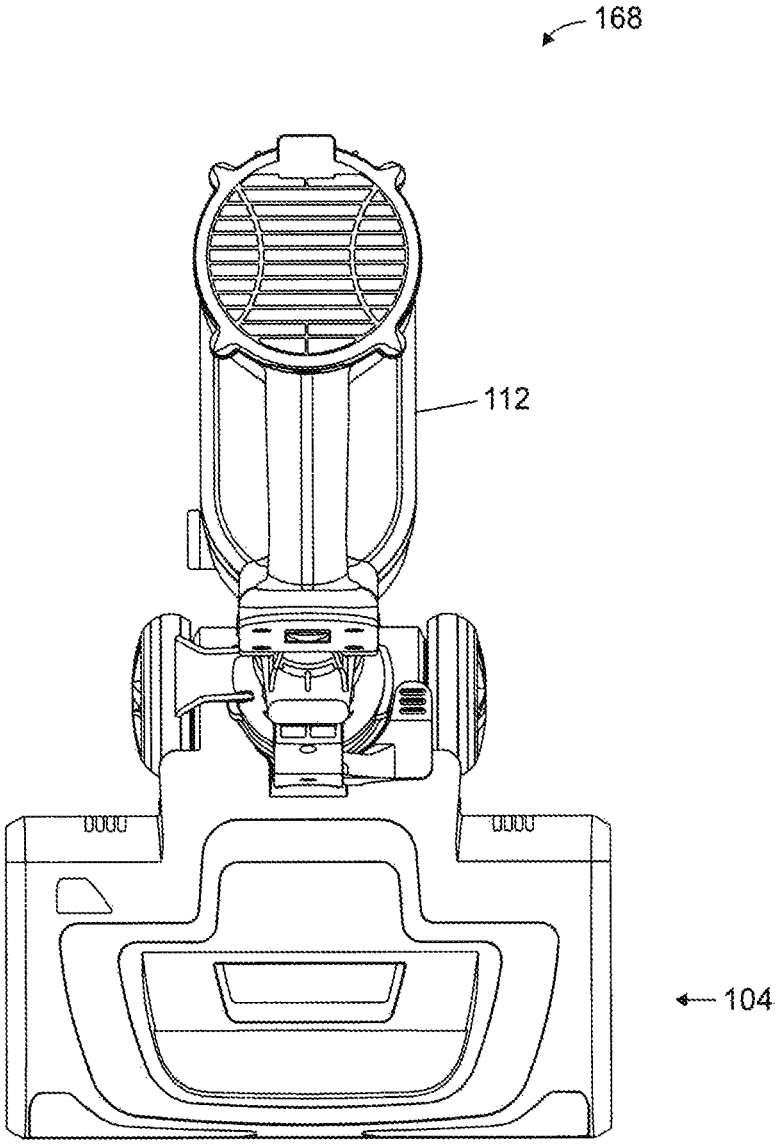

FIG. 42

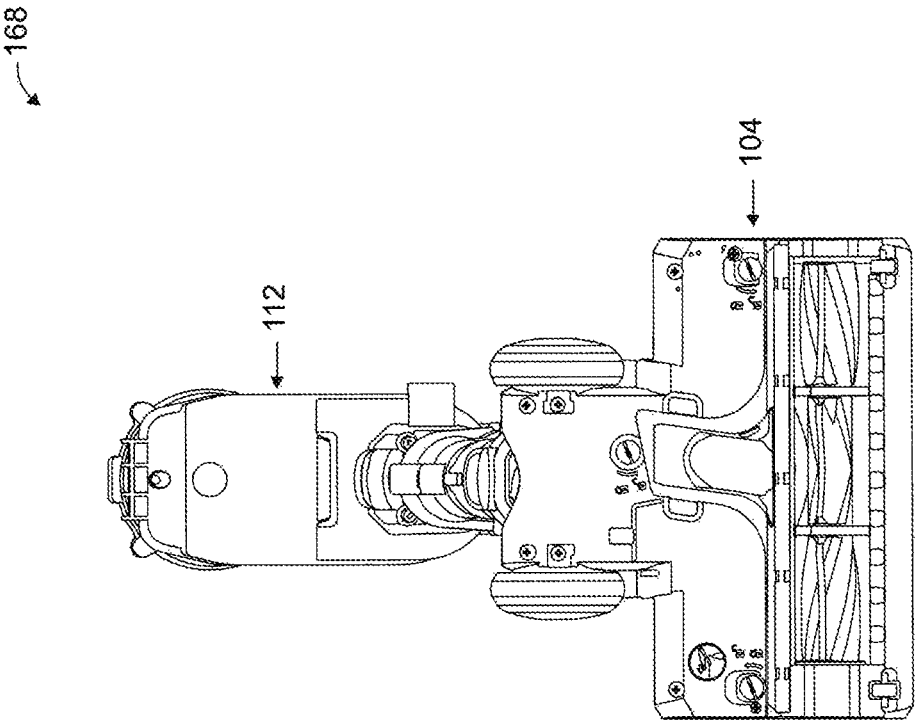

FIG. 43

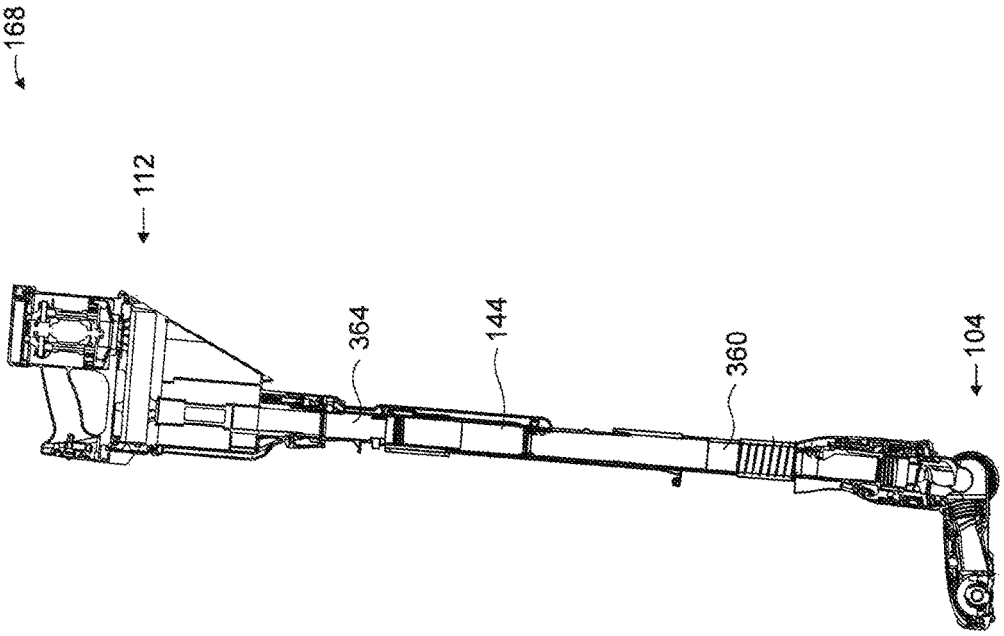

FIG. 44

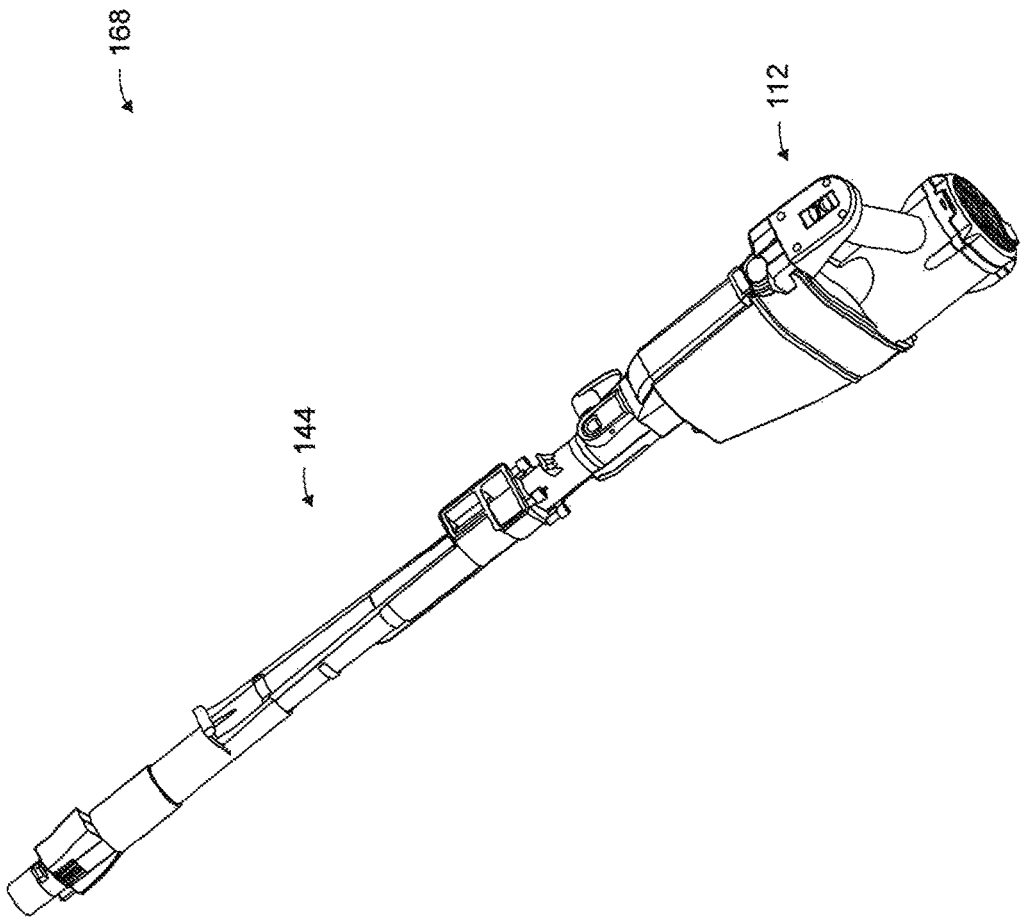

FIG. 44a

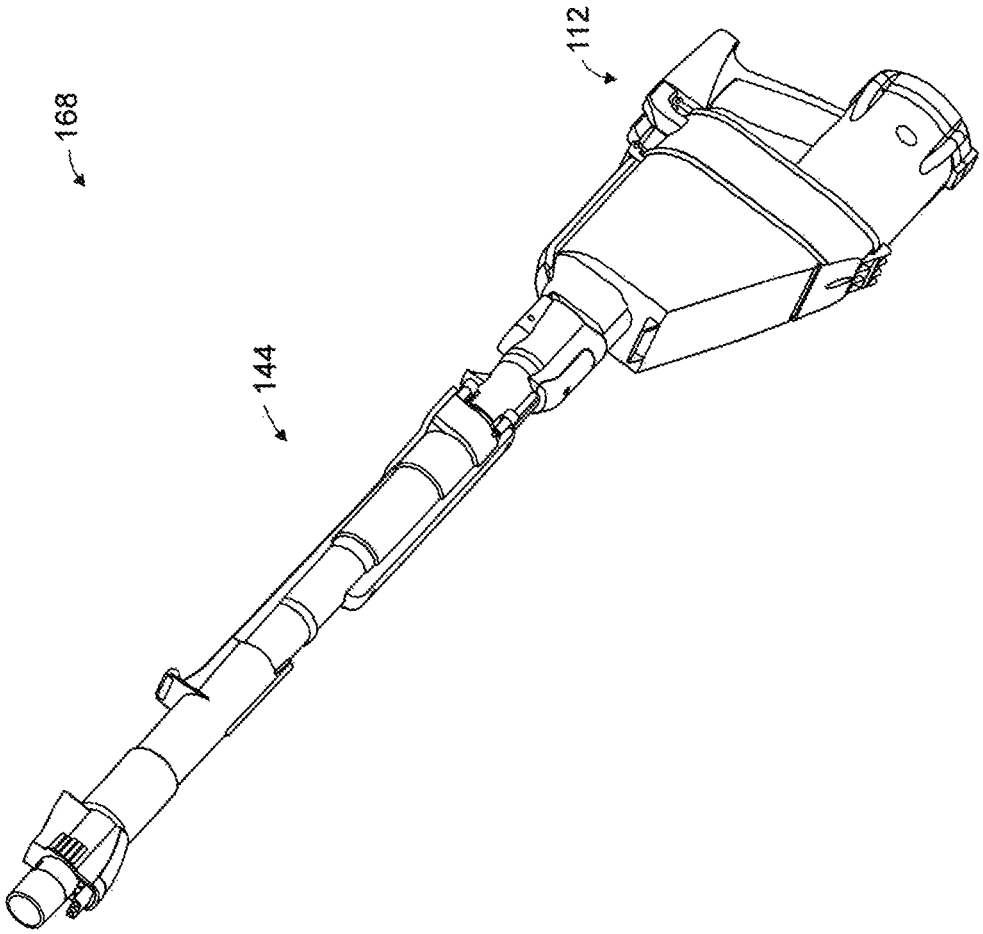

FIG. 44b

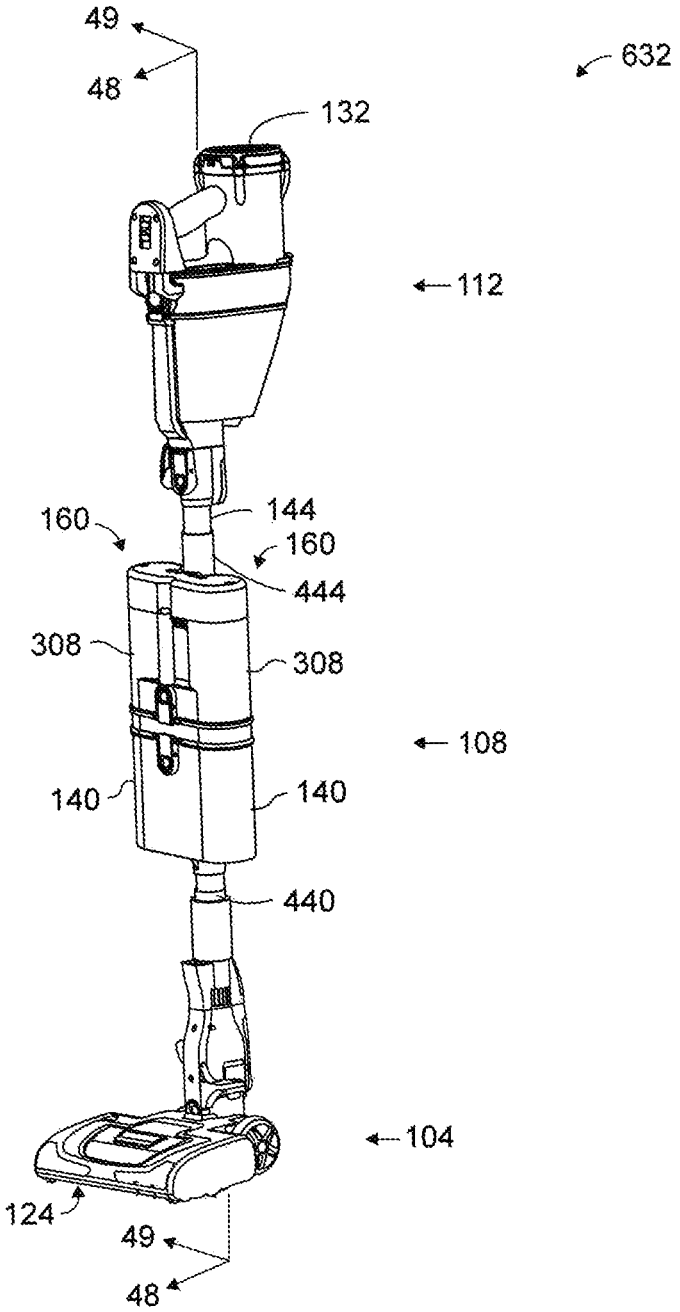
49
48
632
132
112
160
144
160
444
308
308
108
140
140
440
104
124
49
48

FIG. 47

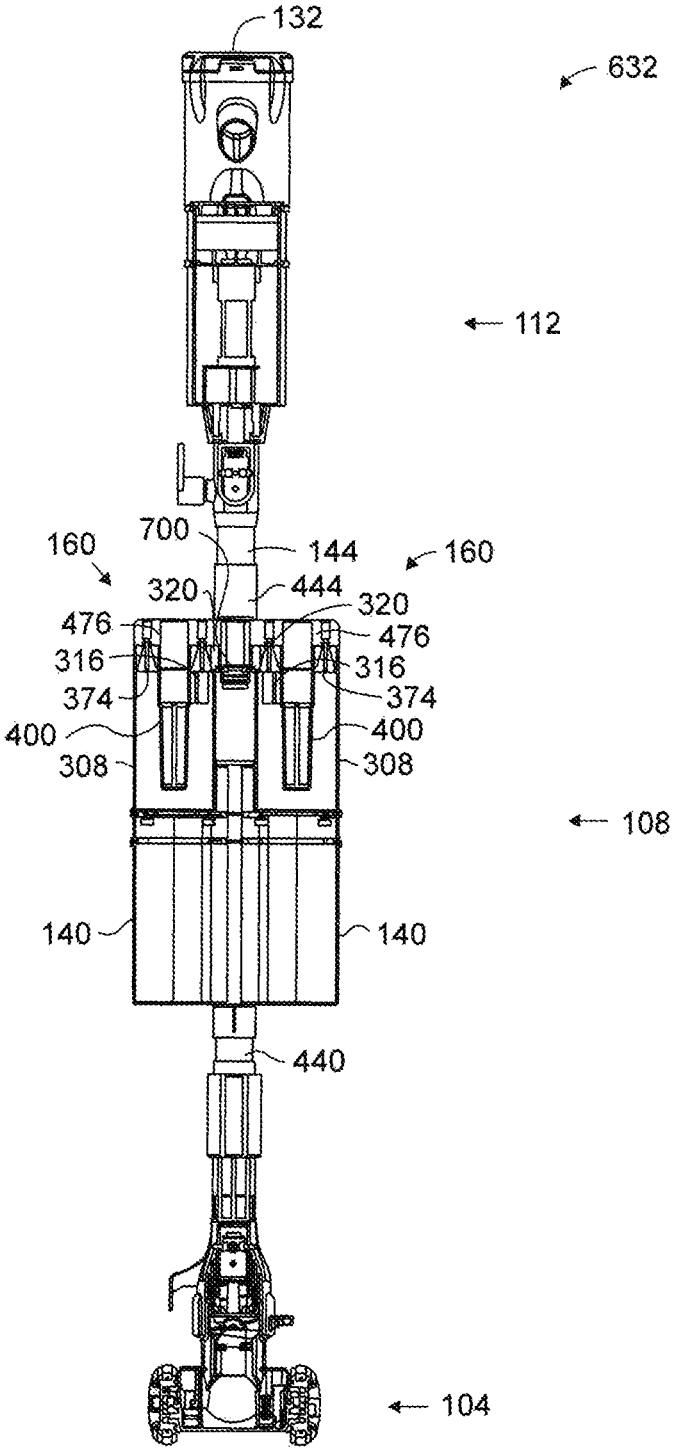
132
632
112
700
144
160
160
320
444
320
476
476
316
316
374
374
400
400
308
308
108
140
140
440
104

FIG. 48

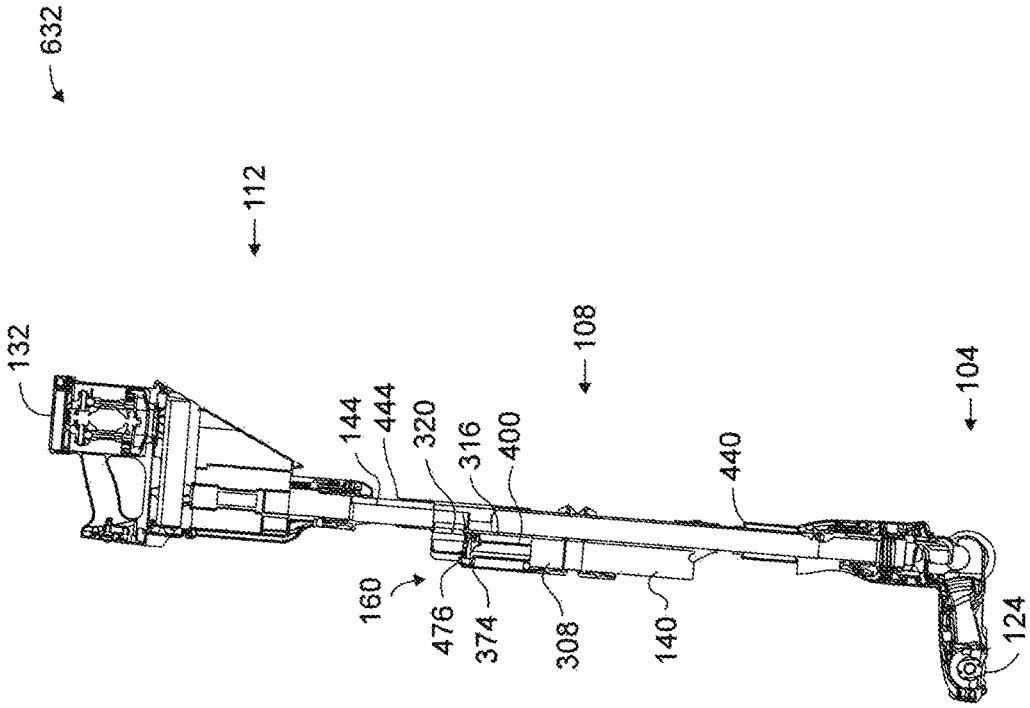
632
112
132
108
104
144
444
320
316
400
440
160
476
374
308
140
124

FIG. 49

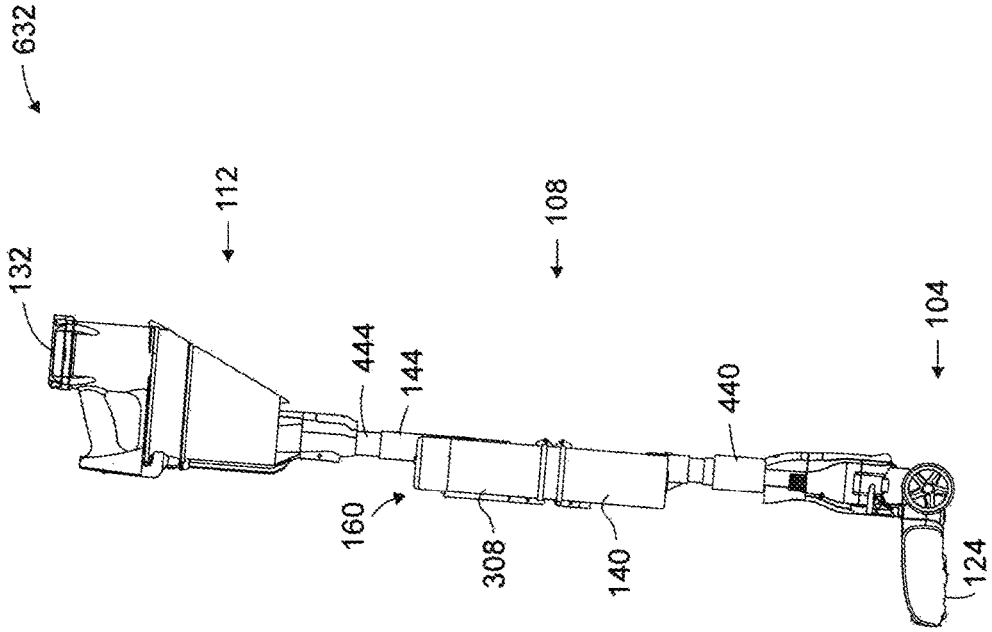

FIG. 50

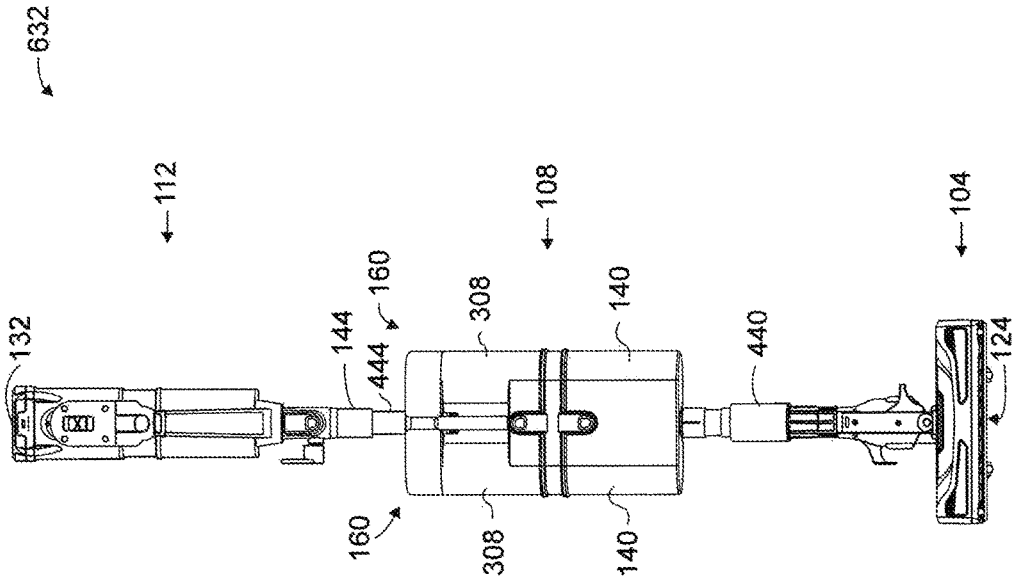

FIG. 51

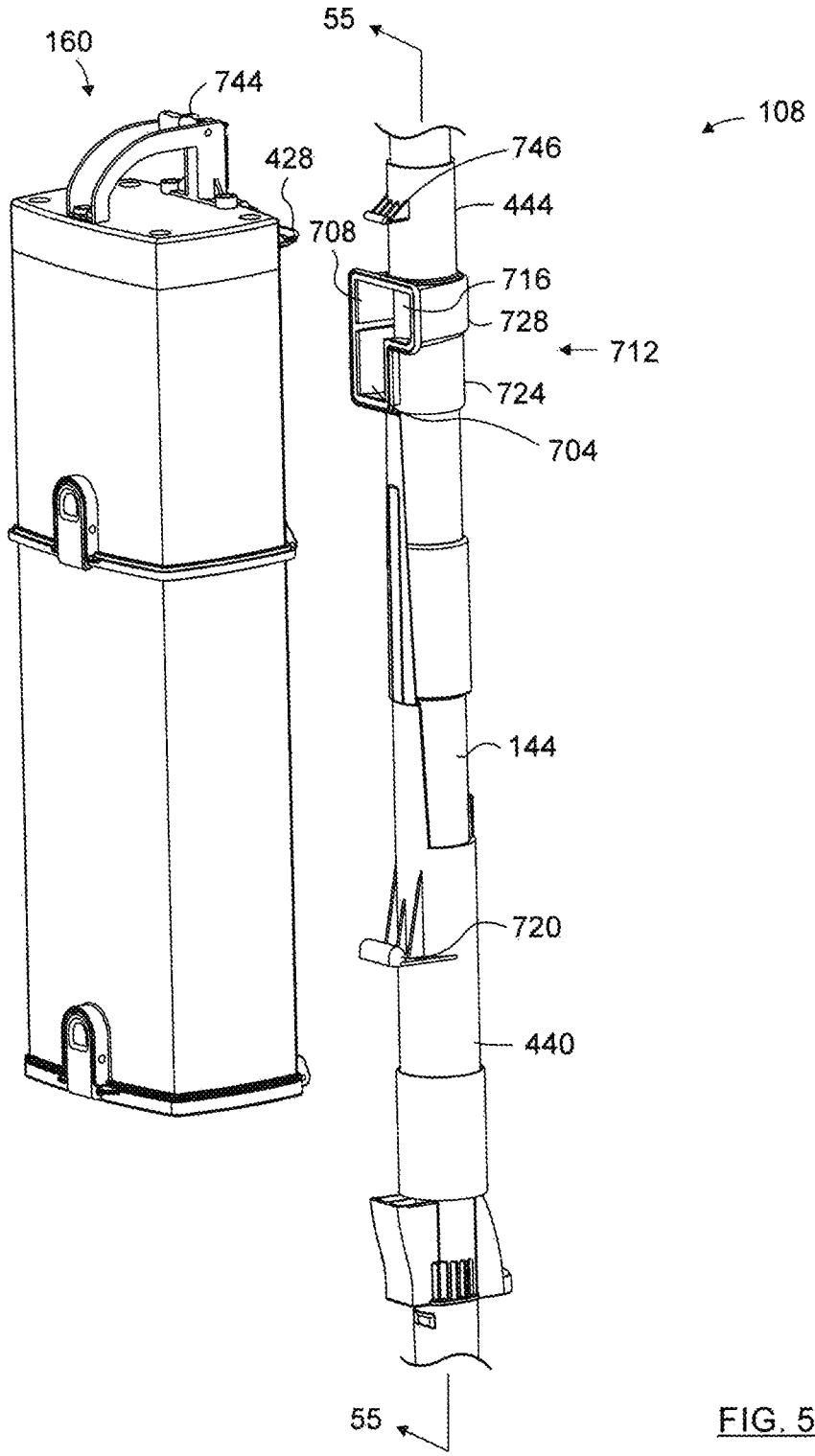

FIG. 52

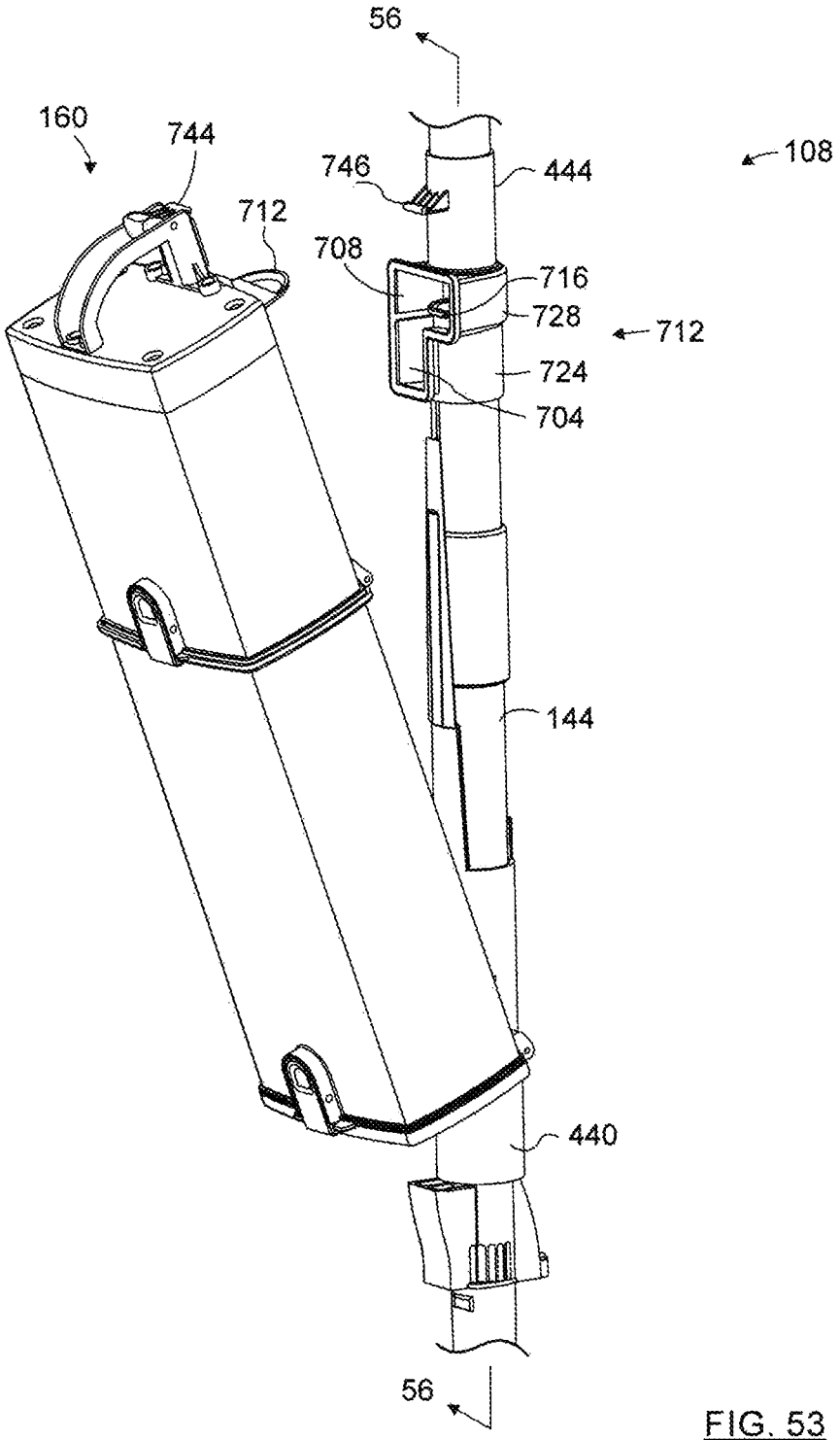

FIG. 53

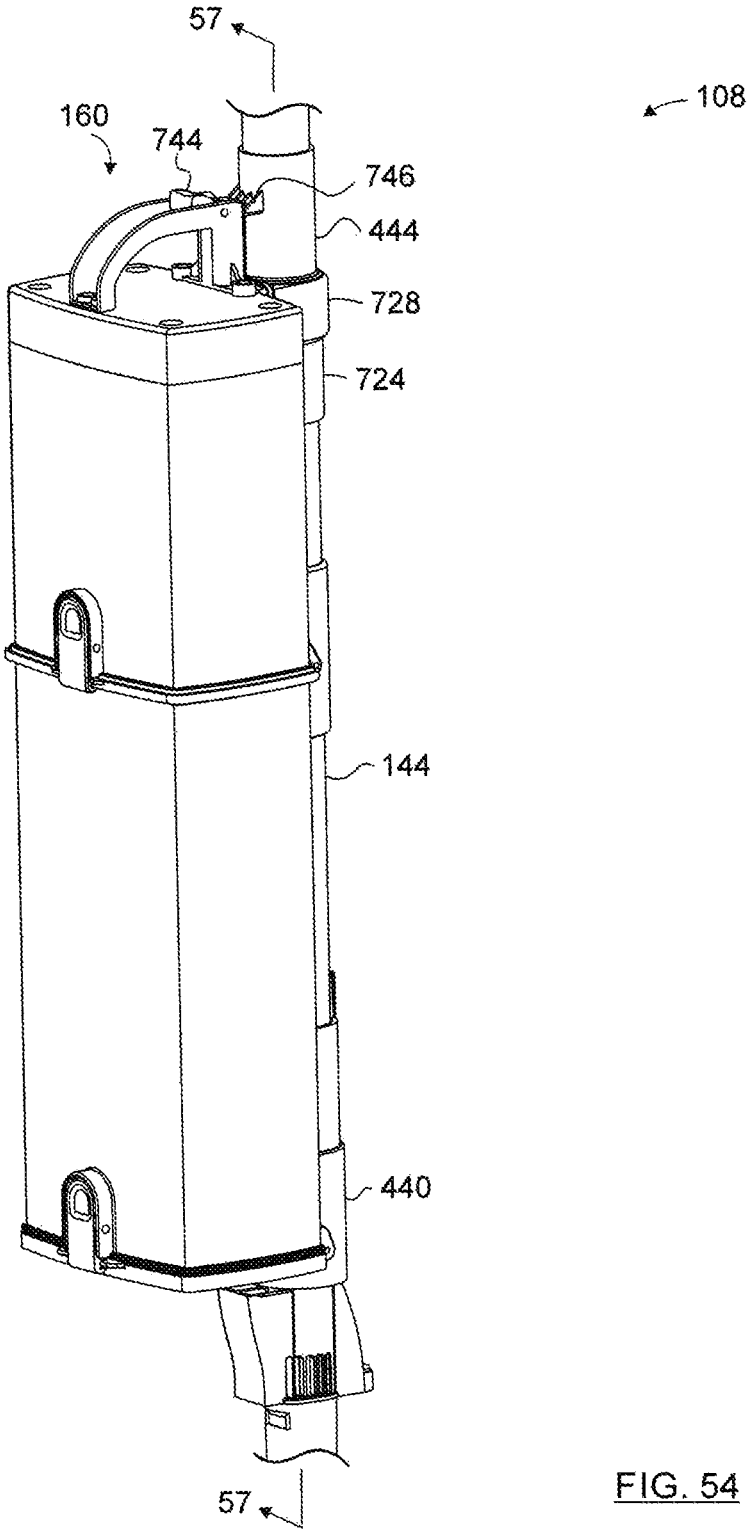

FIG. 54

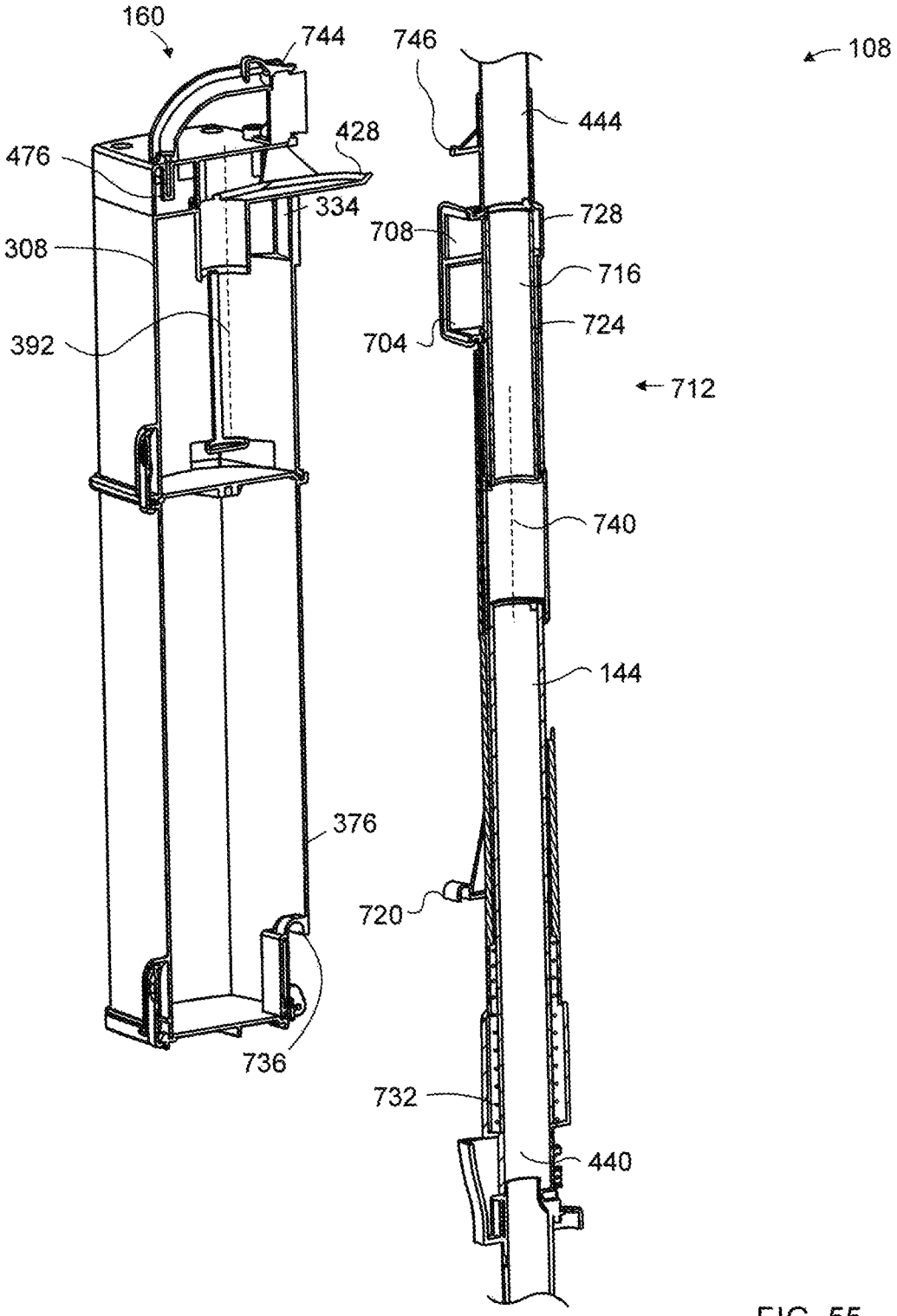
160
744
746
108
444
428
476
334
728
708
308
716
392
724
704
712
740
144
376
720
736
732
440

FIG. 55

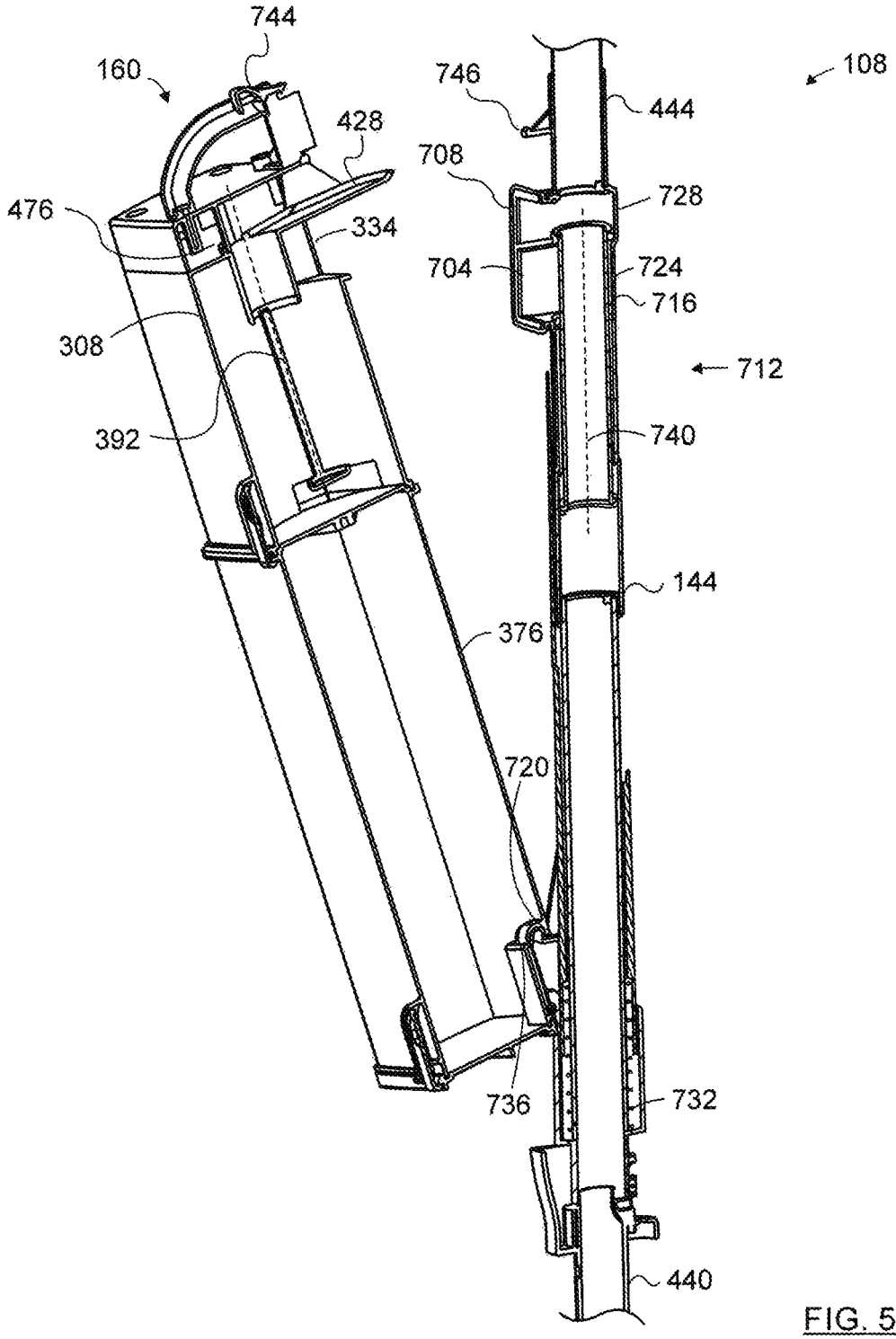
744
160
746
108
444
428
708
728
476
334
704
724
716
308
712
392
740
144
376
720
736
732
440

FIG. 56

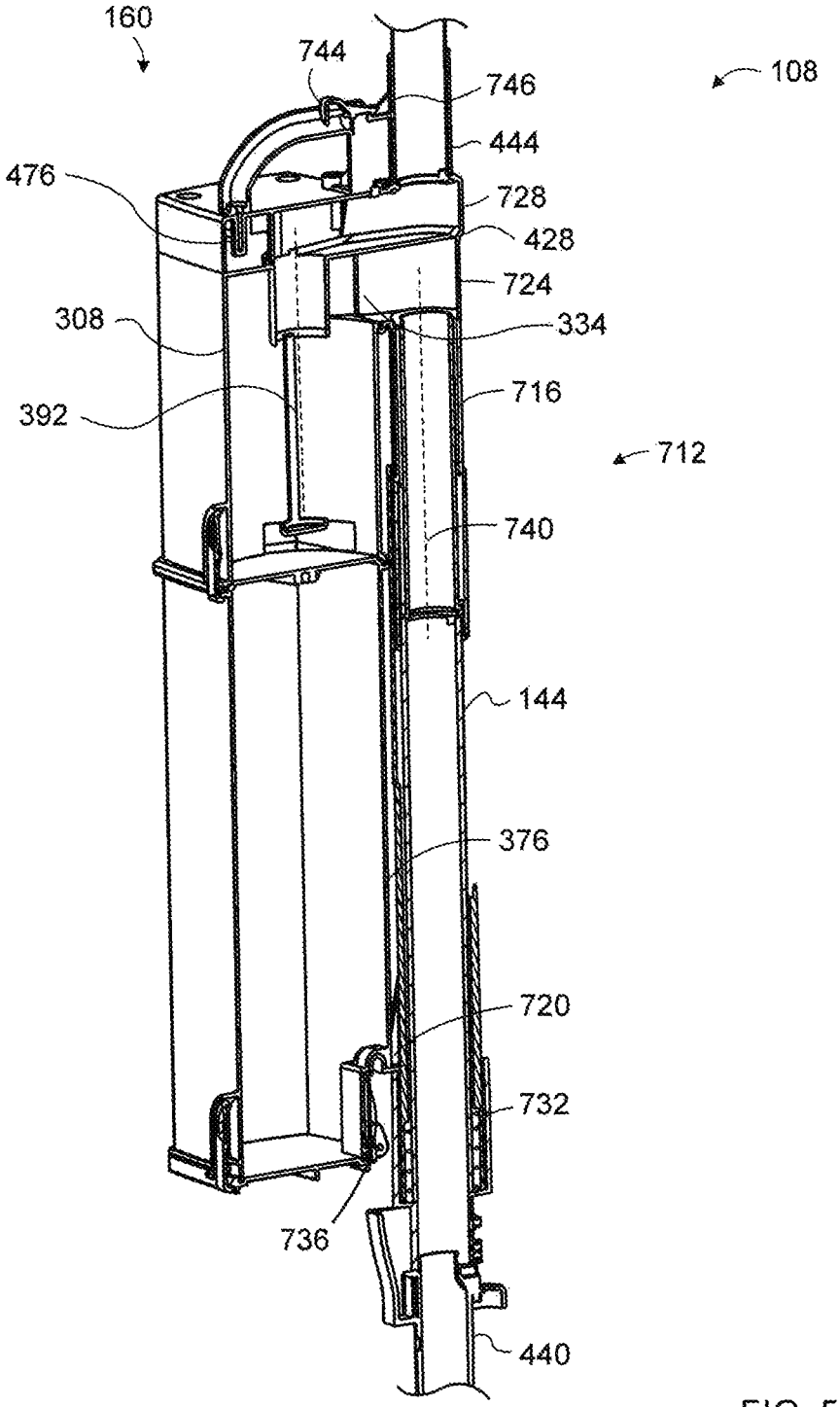
160
744
746
108
444
476
728
428
724
308
334
716
392
712
740
144
376
720
732
736
440

FIG. 57

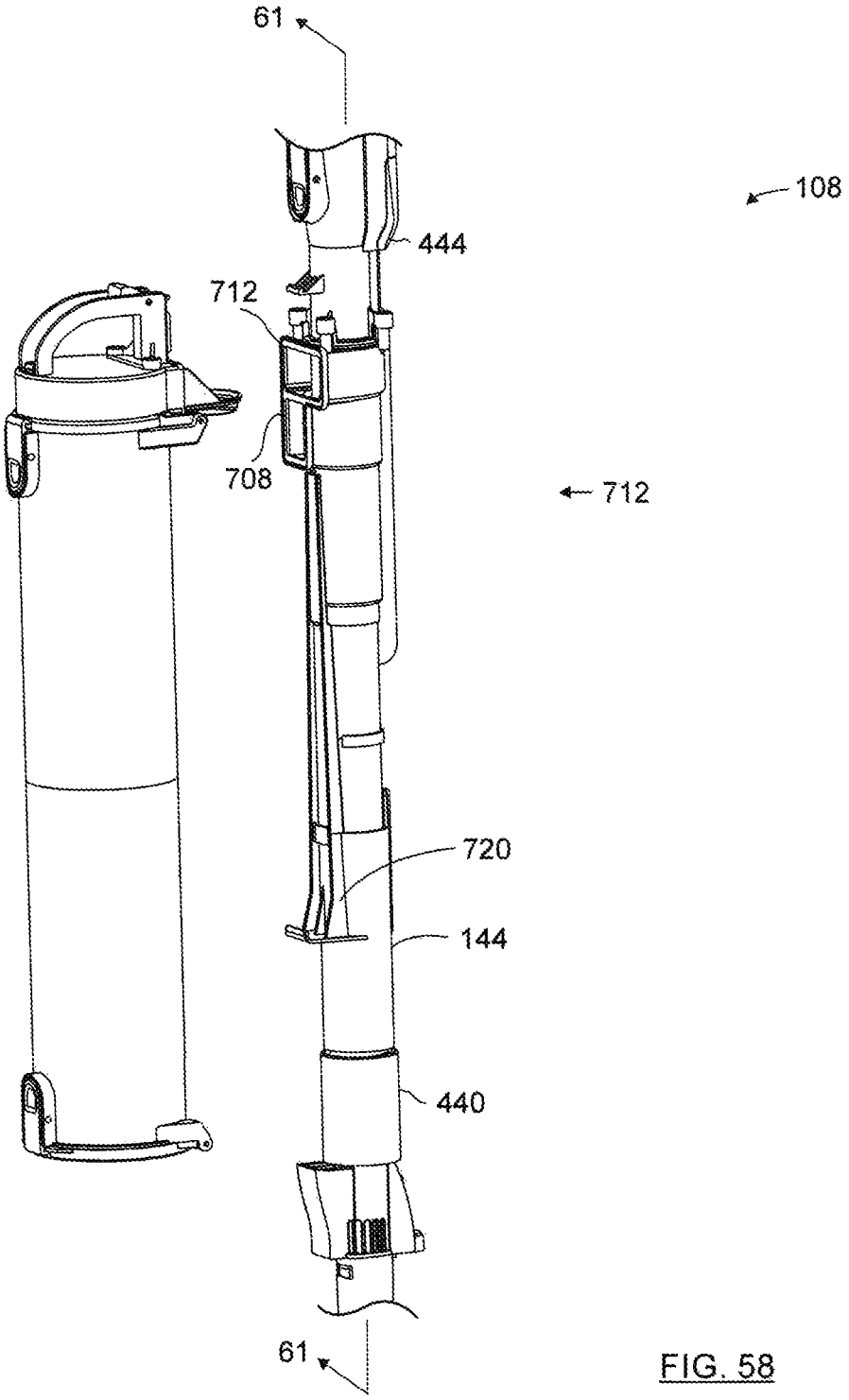

FIG. 58

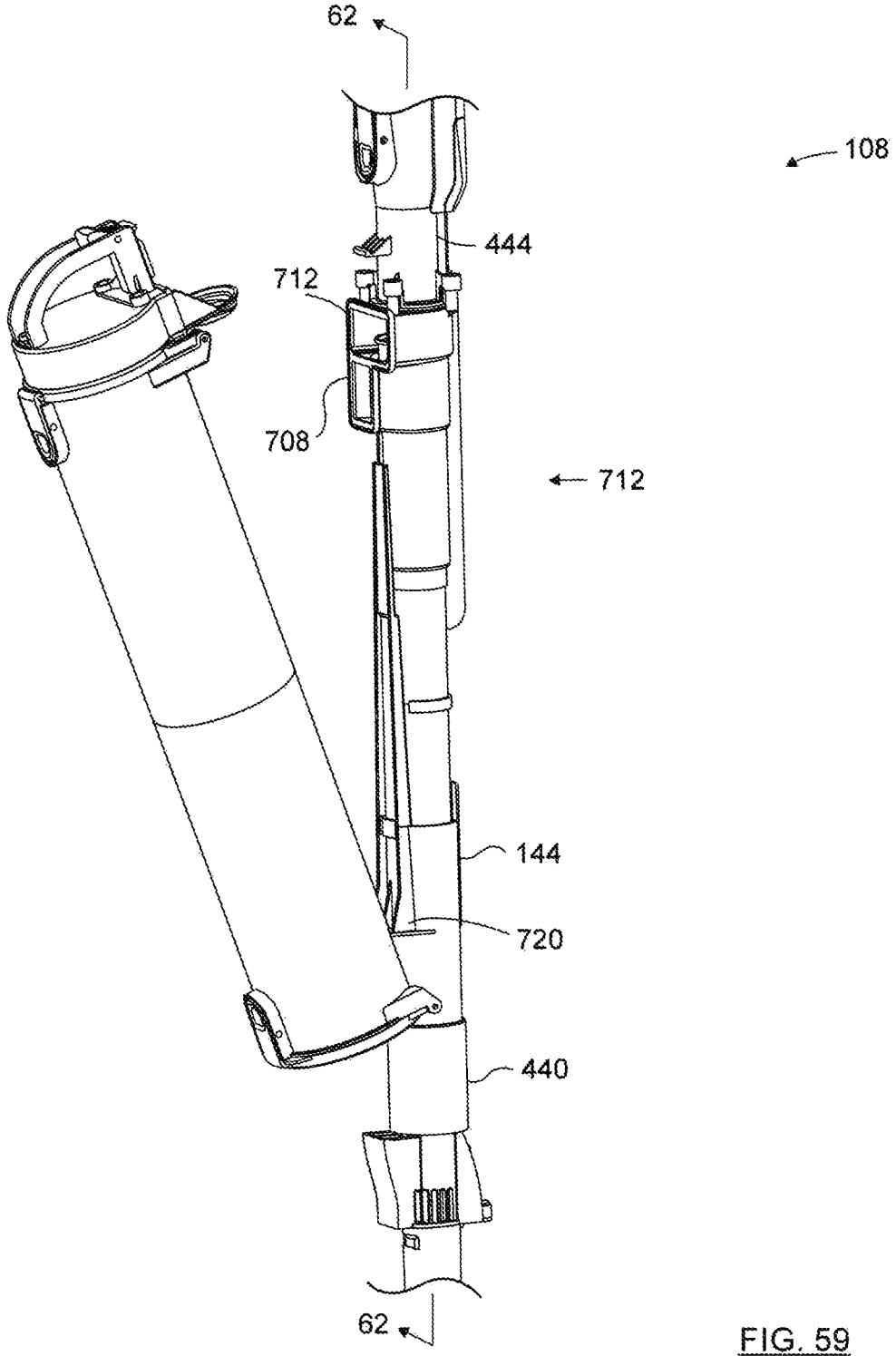

FIG. 59

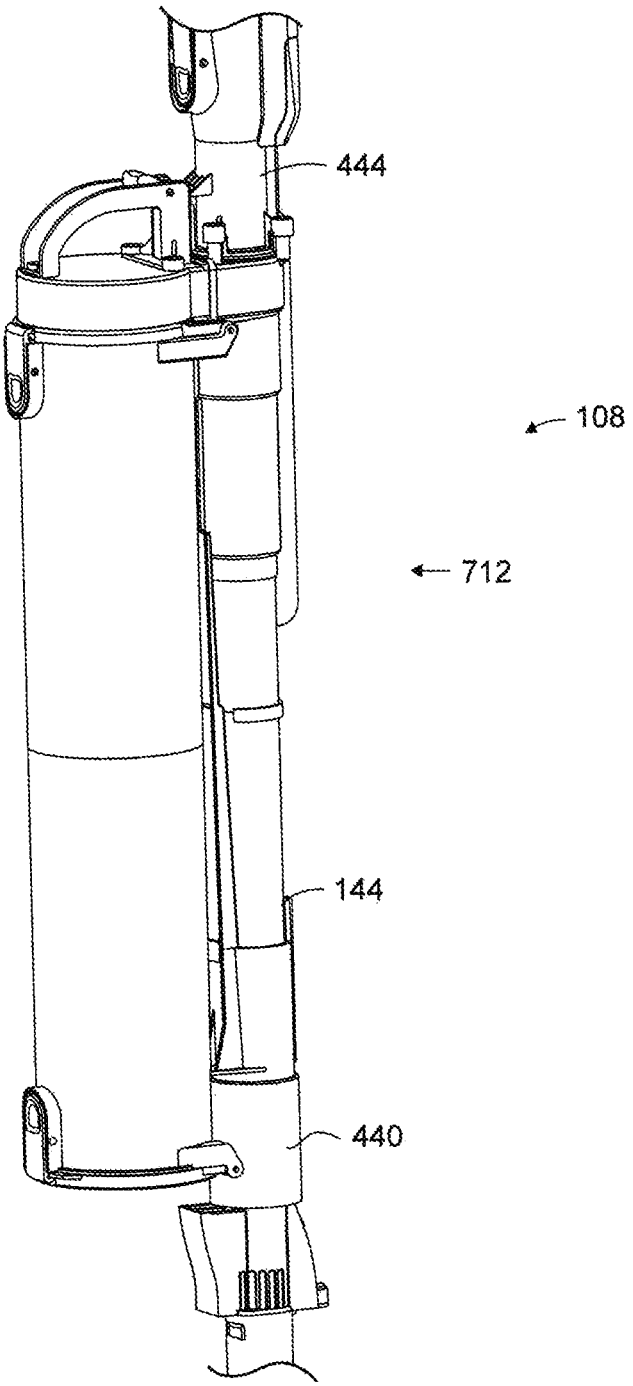

FIG. 60

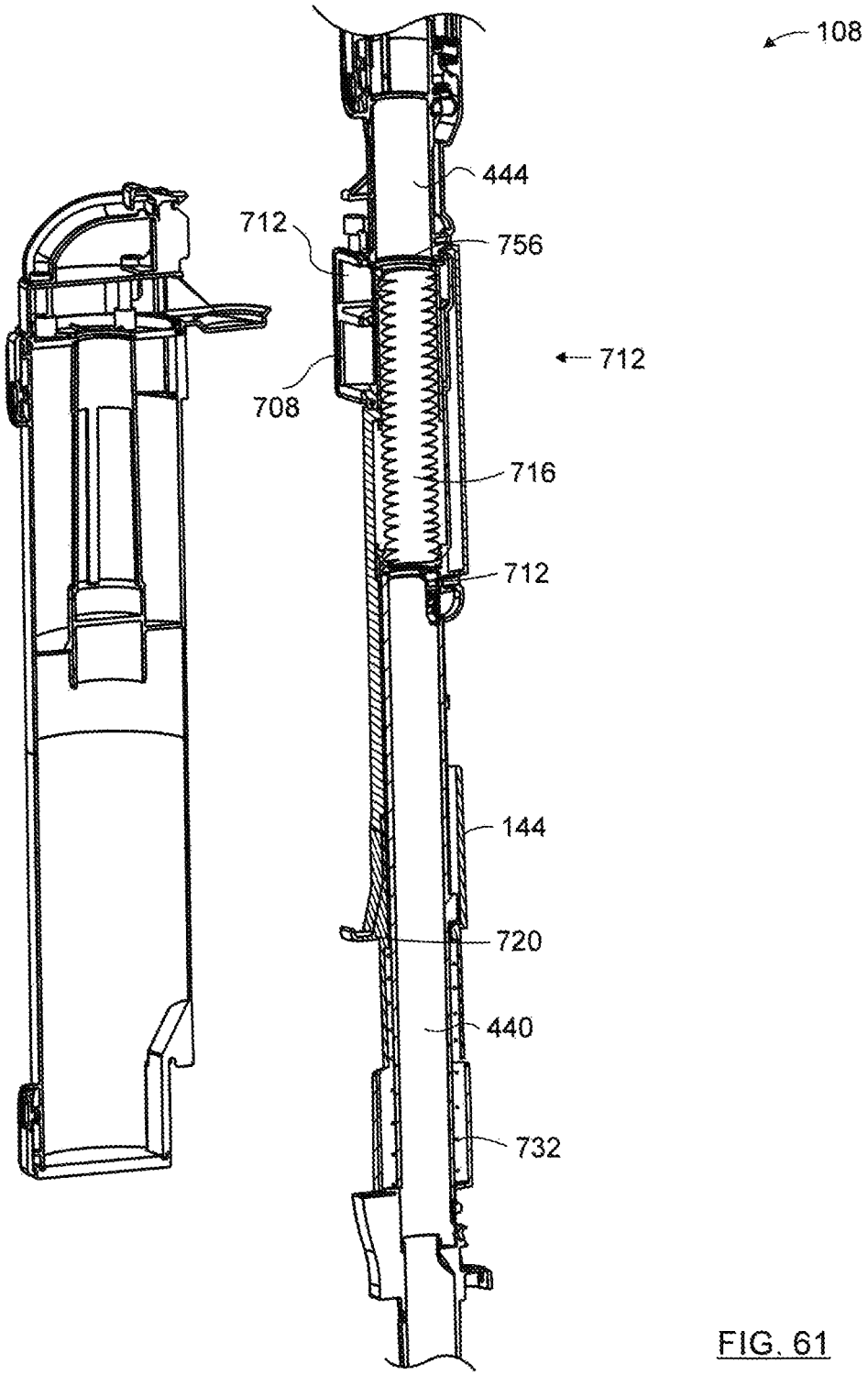

FIG. 61

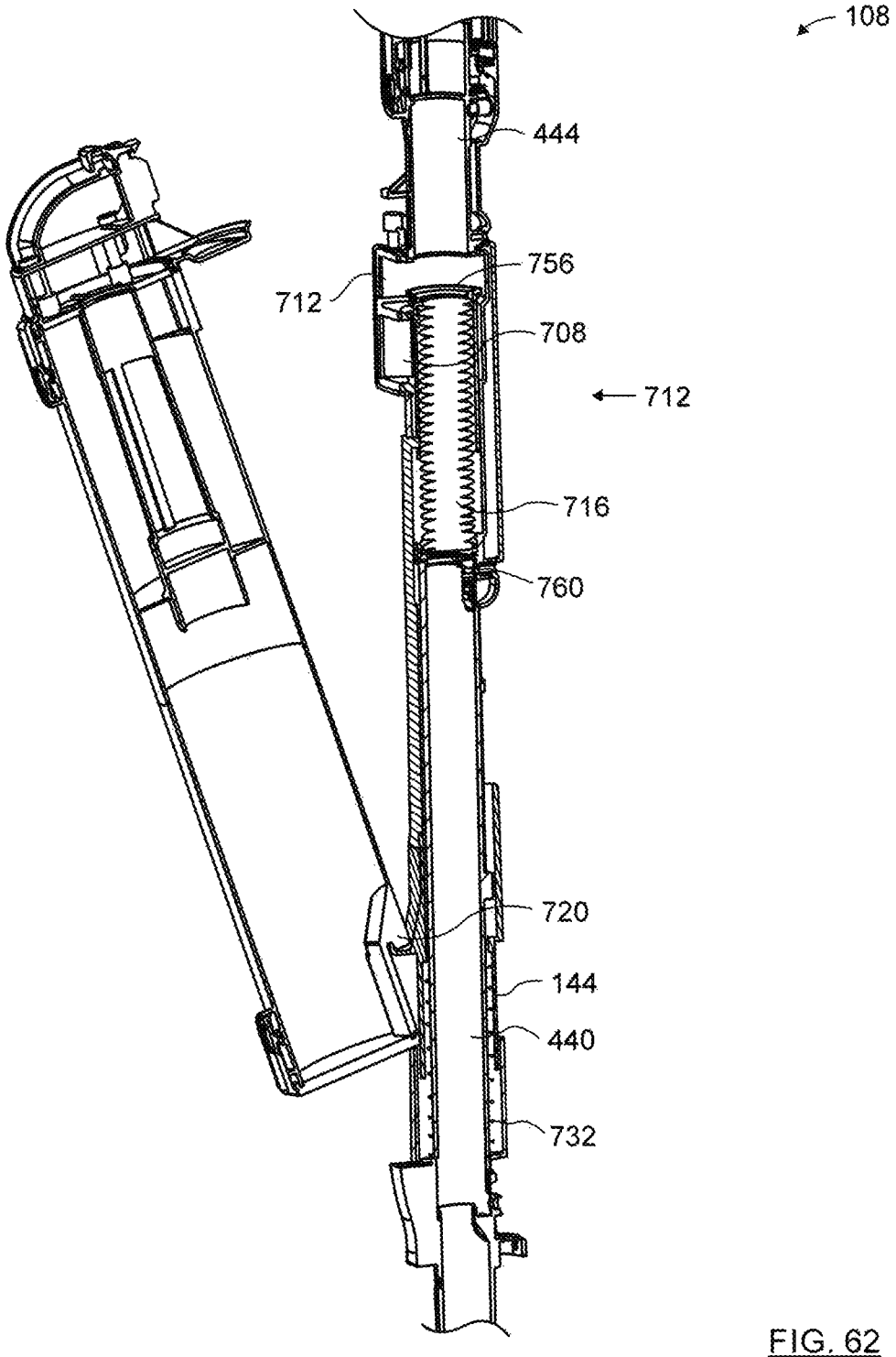

FIG. 62

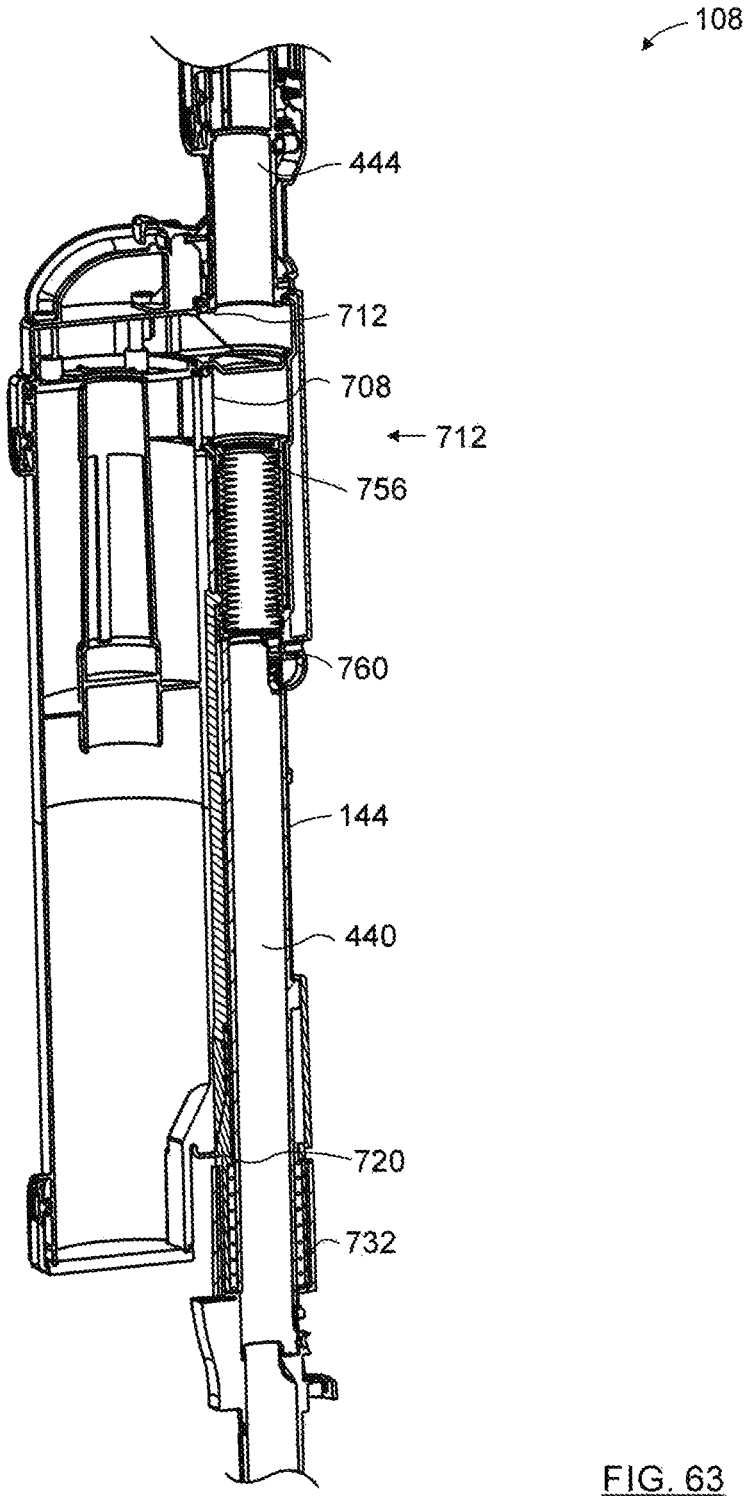

FIG. 63

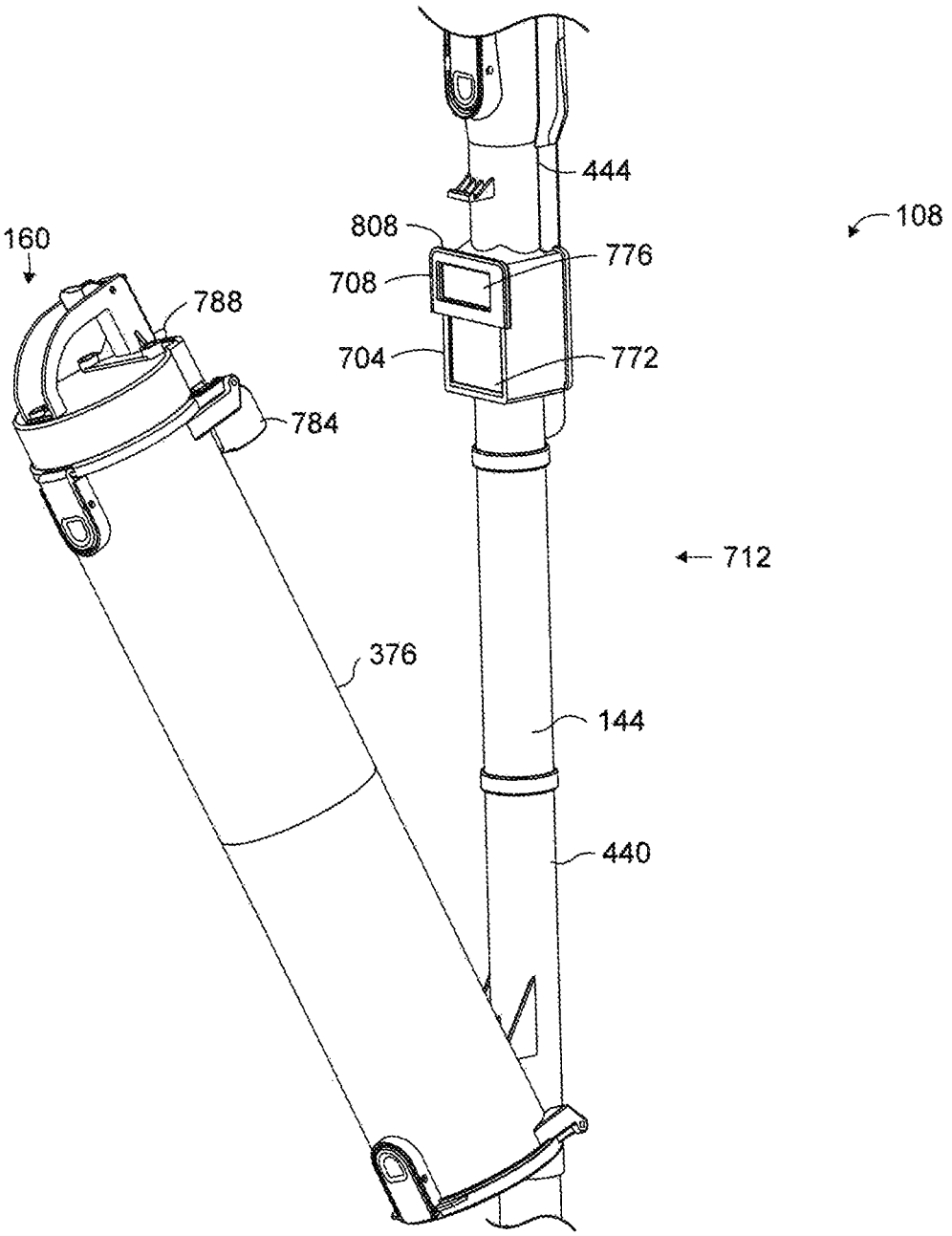

FIG. 64

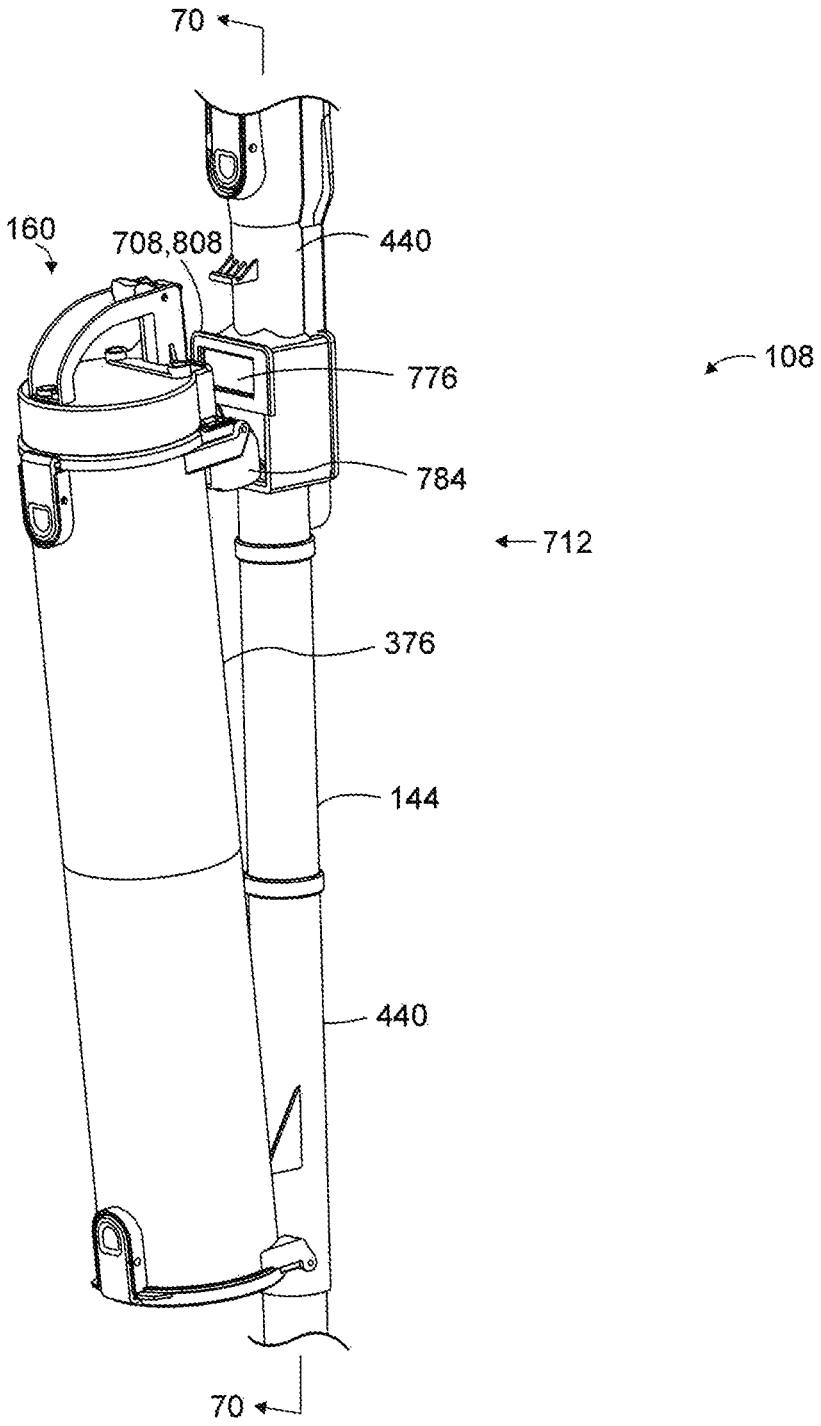

FIG. 65

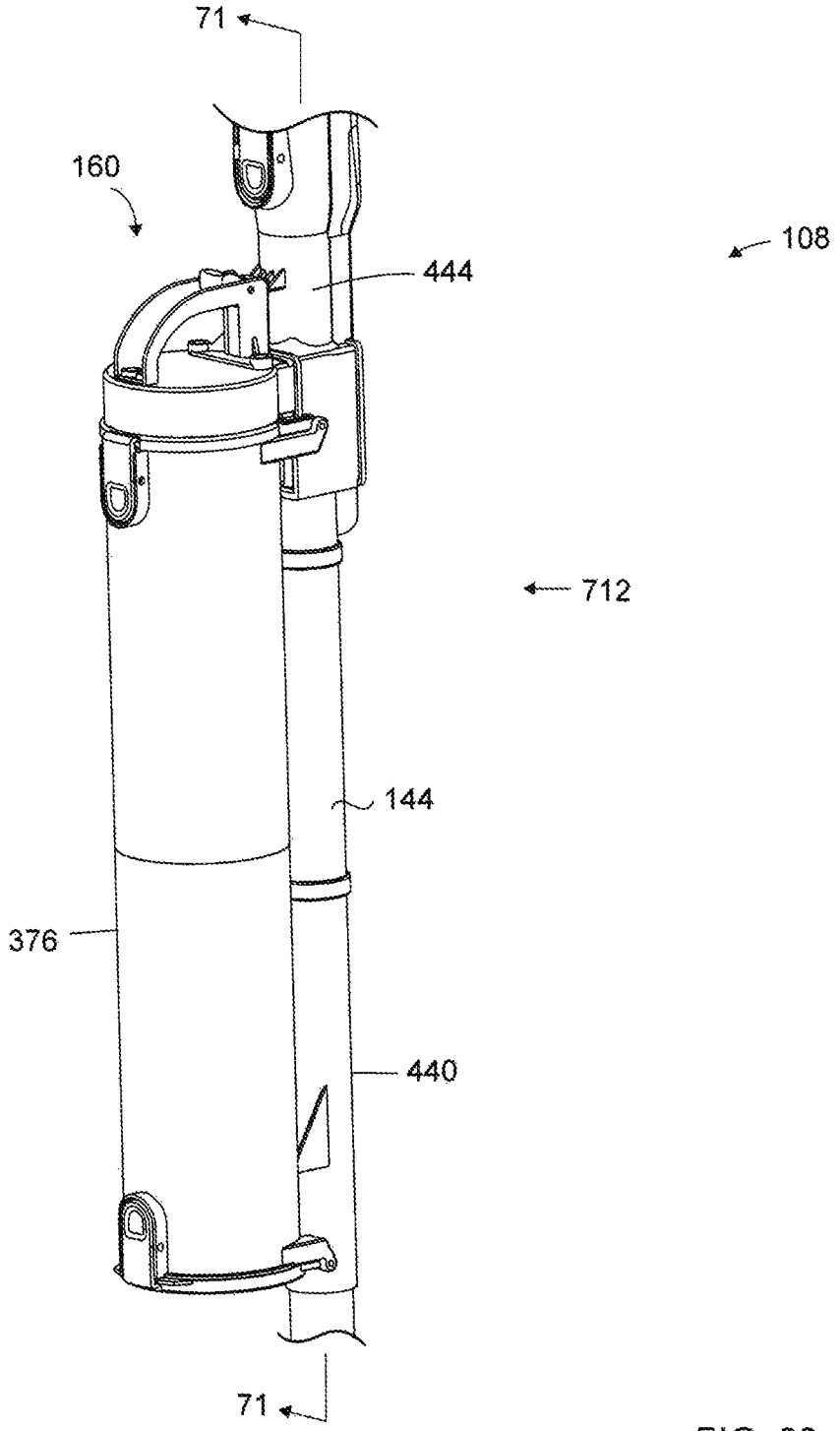

FIG. 66

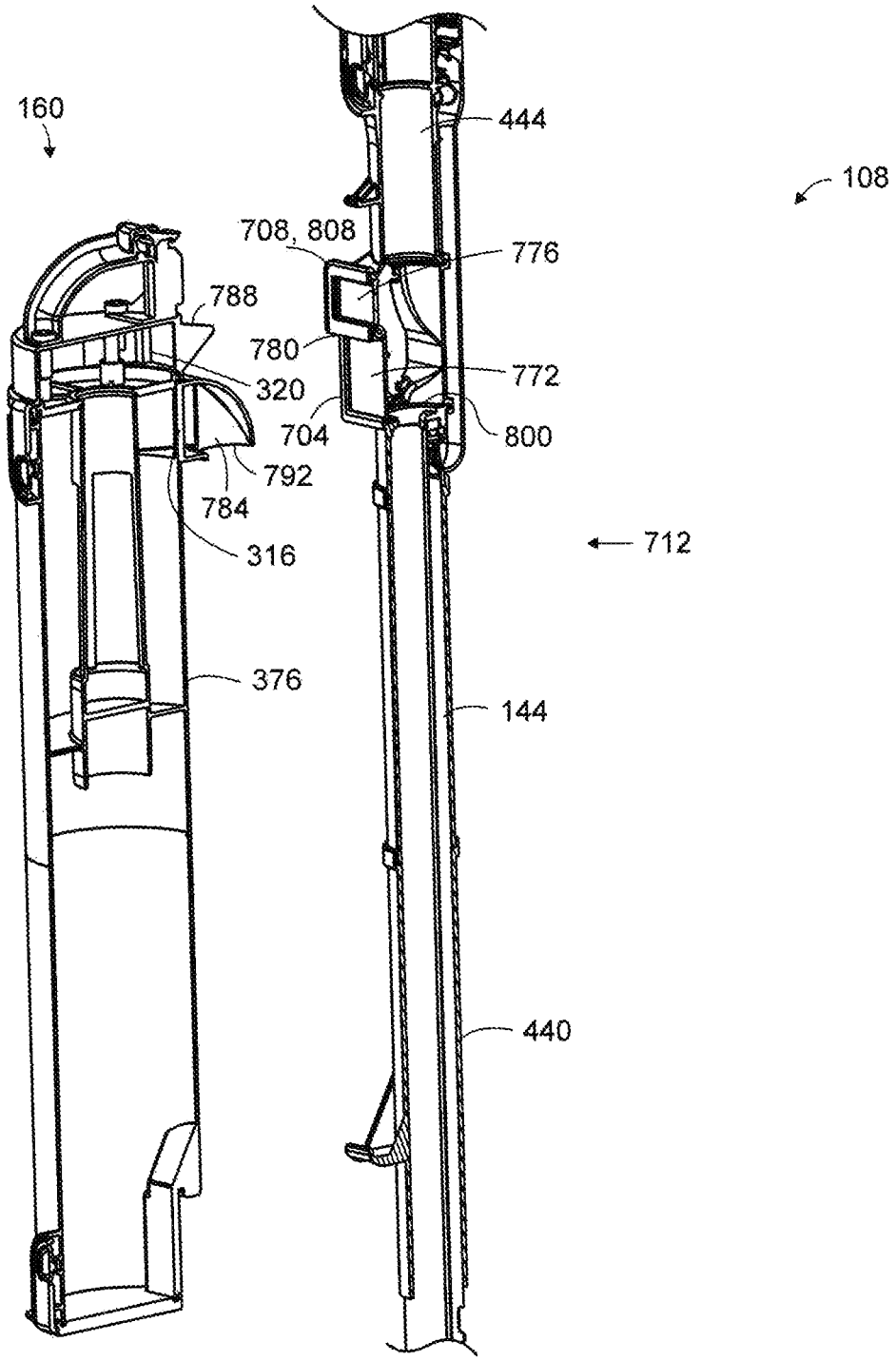
160
444
108
708, 808
776
788
780
772
320
704
800
792
784
712
316
376
144
440

FIG. 67

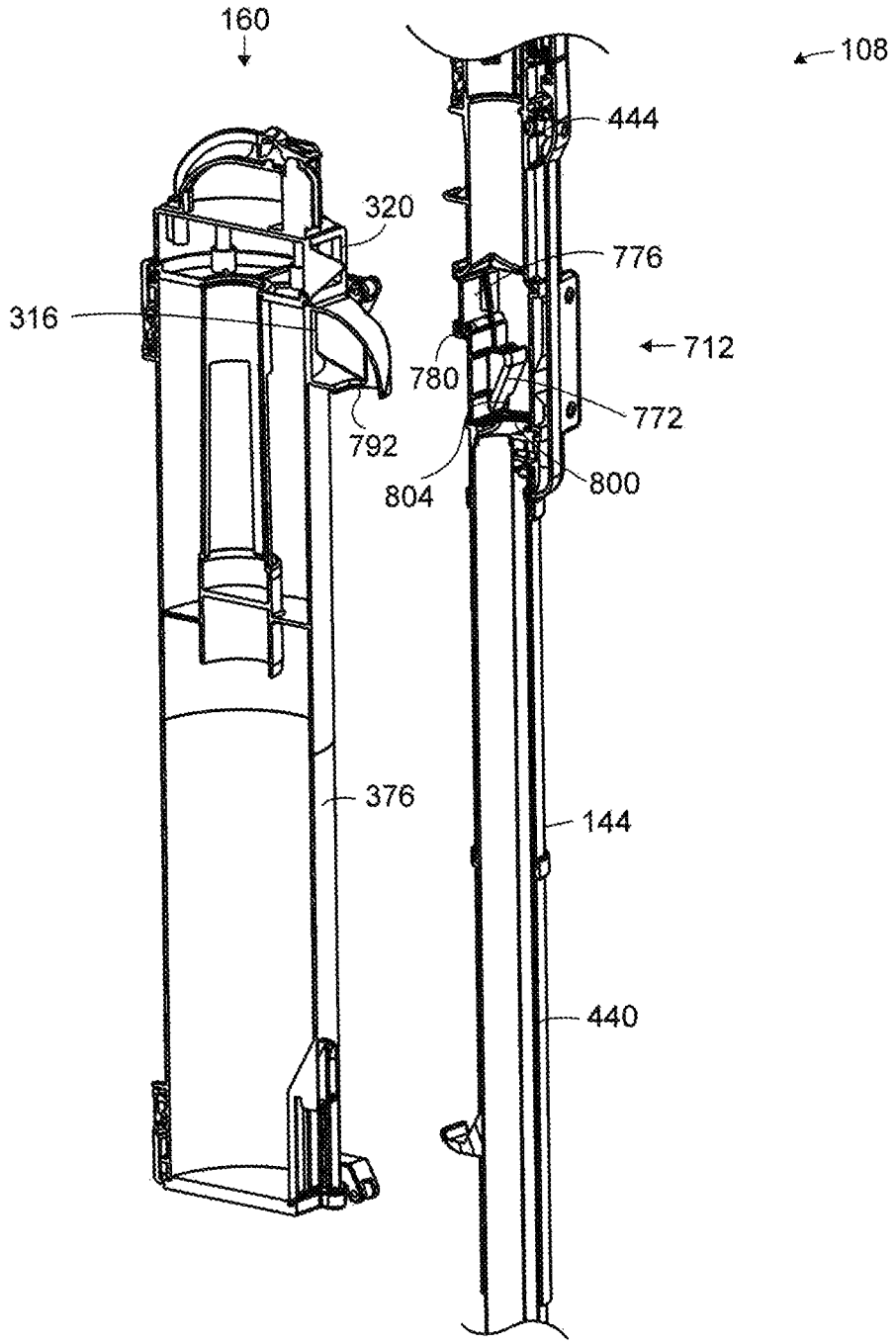

FIG. 68

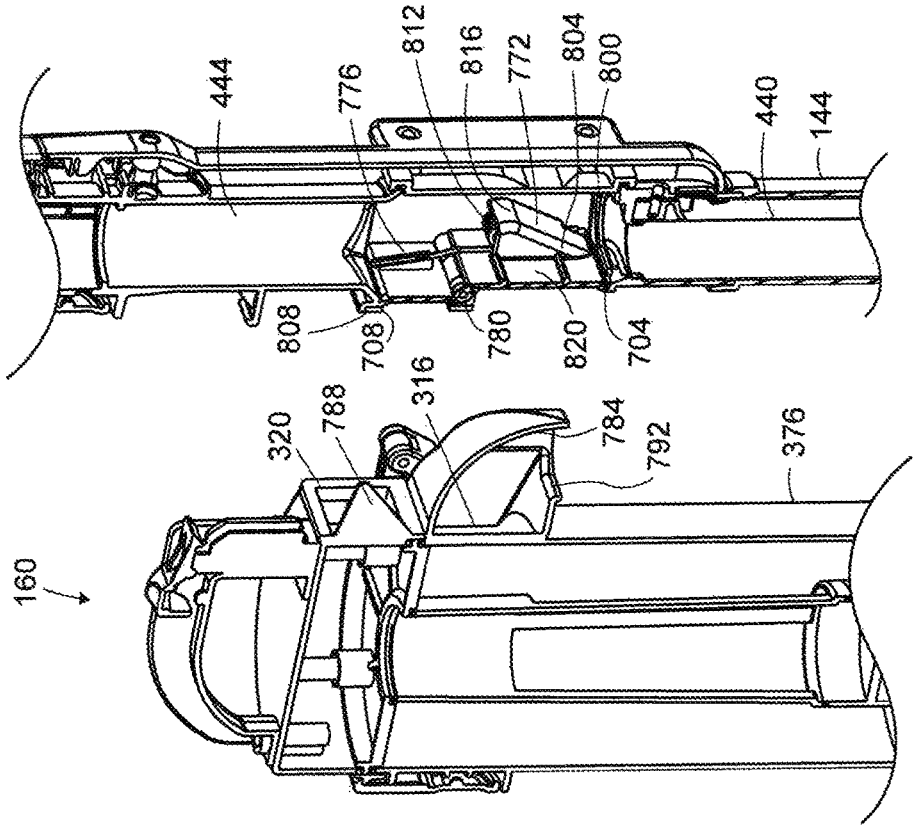
108
712
444
776
812
816
772
804
800
440
144
808
708
780
820
704
160
320
788
316
784
792
376

FIG. 69

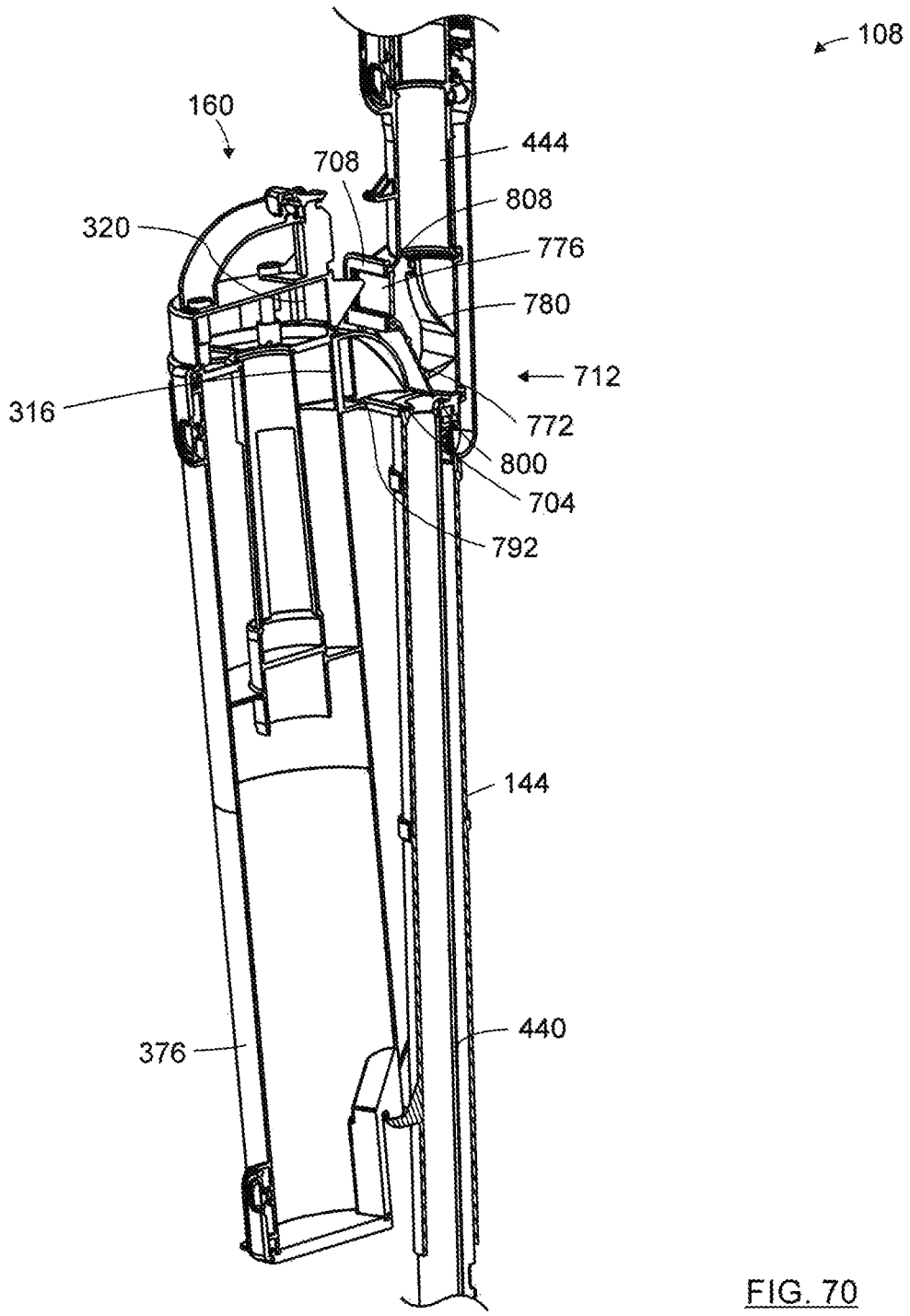
108
160
444
708
808
320
776
780
712
316
772
800
704
792
144
440
376

FIG. 70

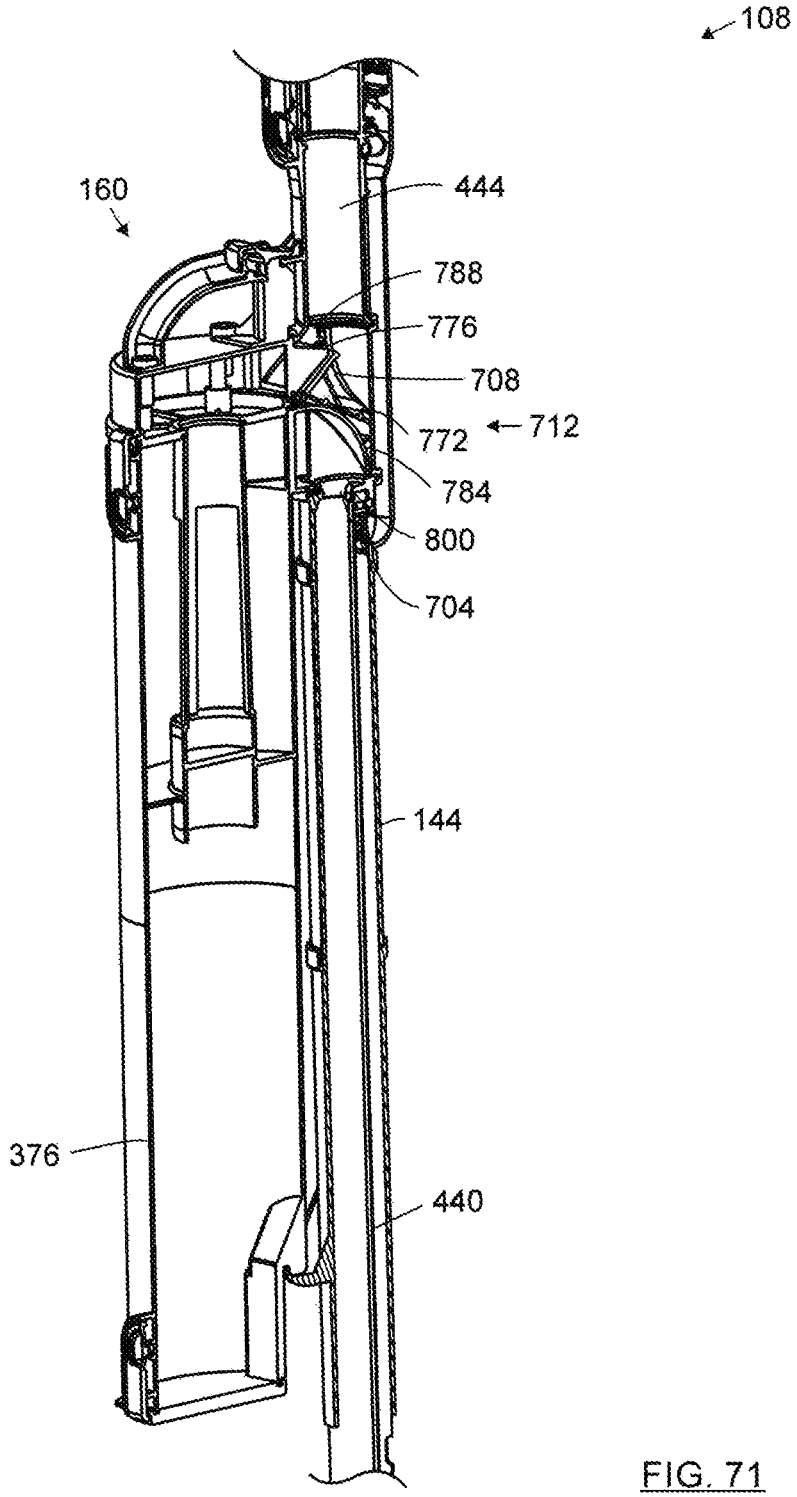

FIG. 71

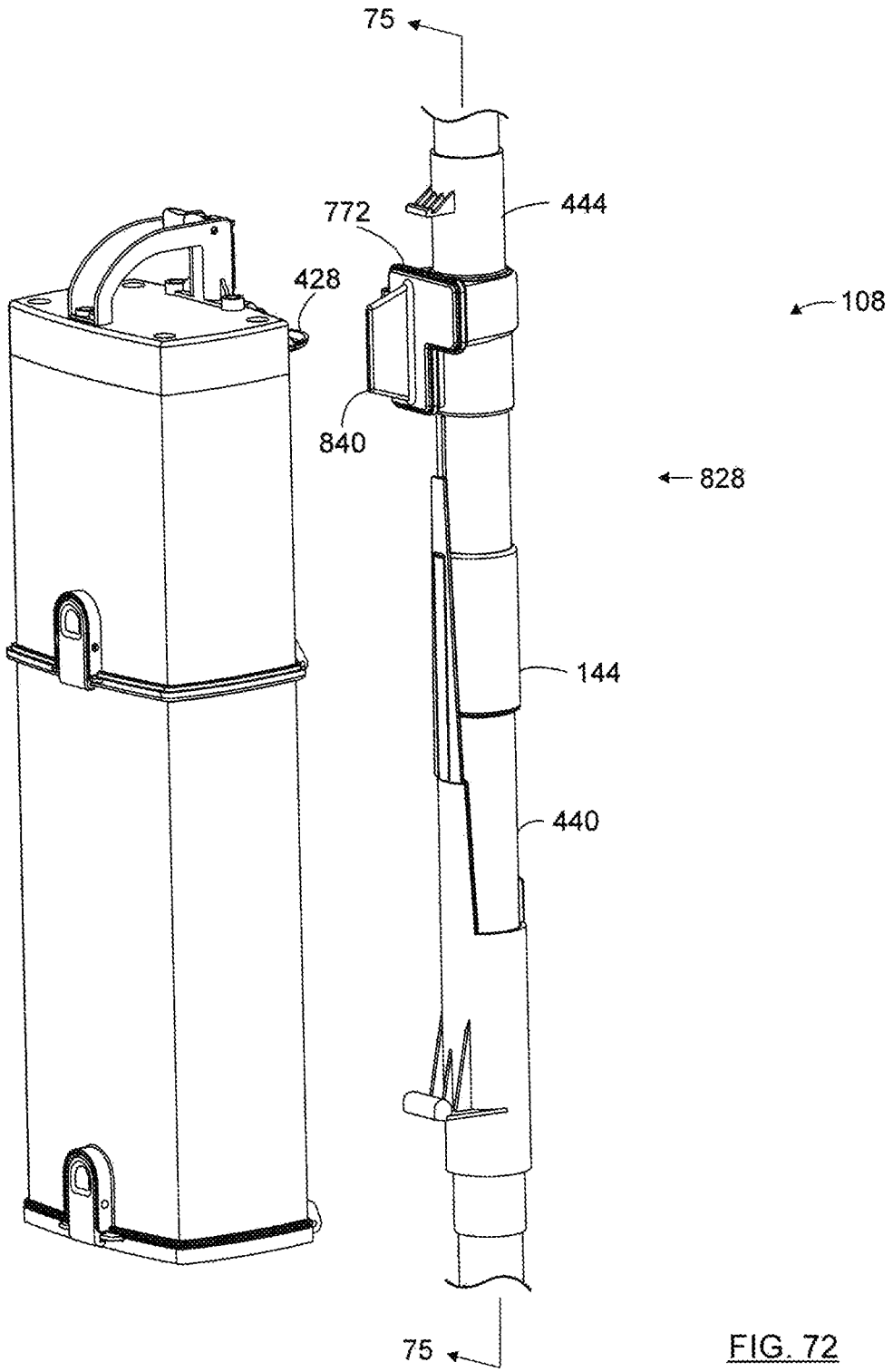

FIG. 72

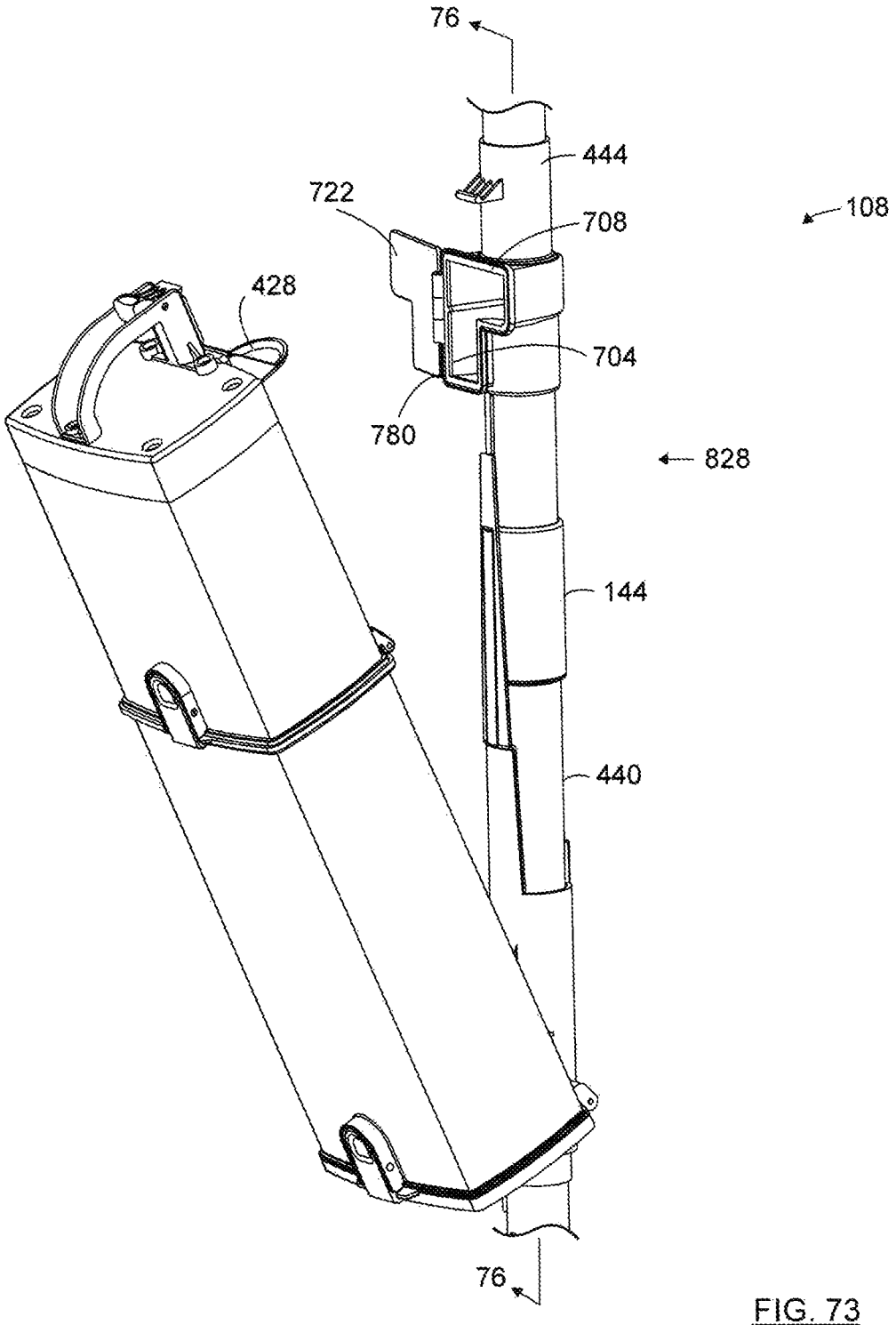

FIG. 73

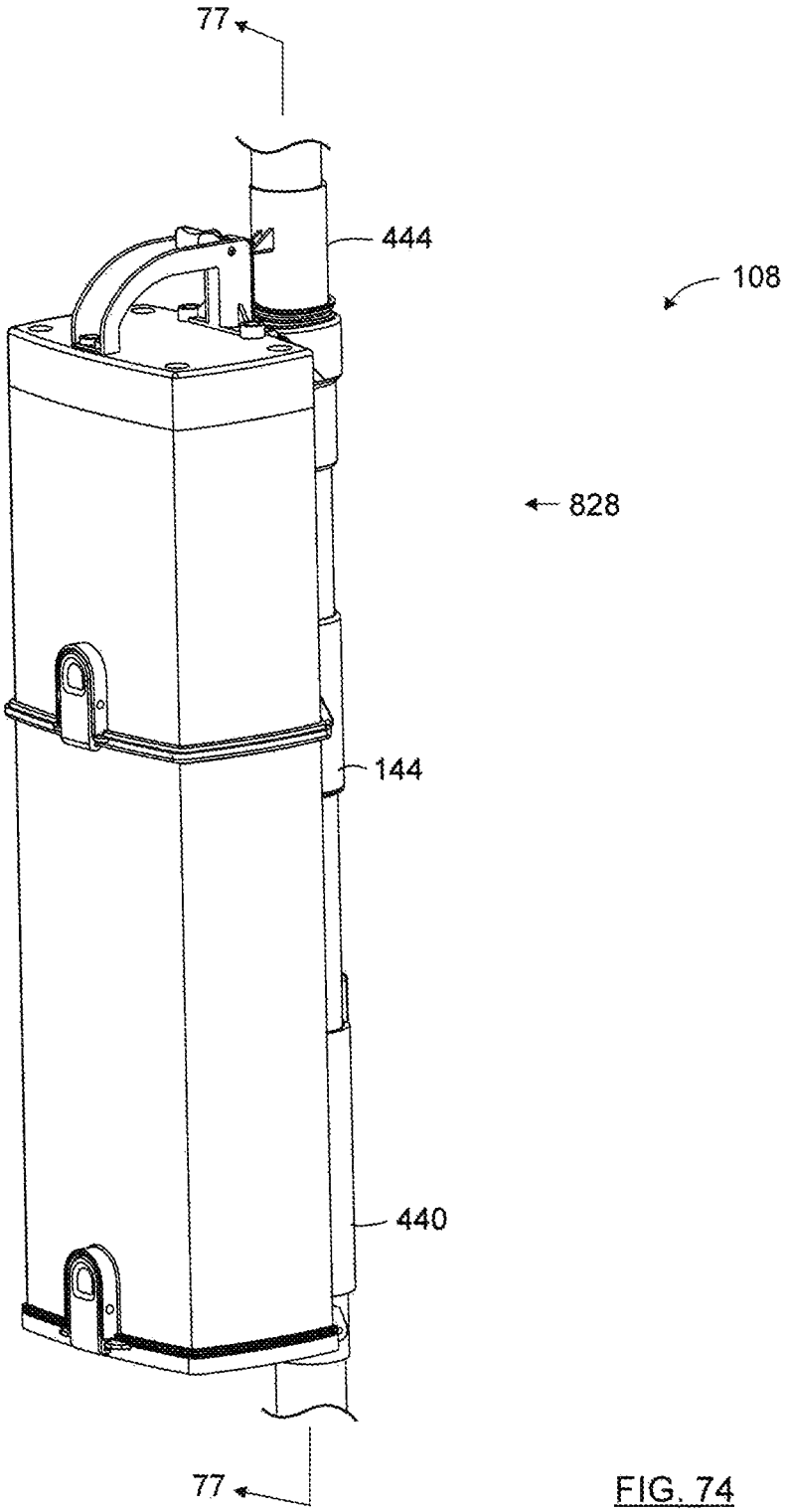

FIG. 74

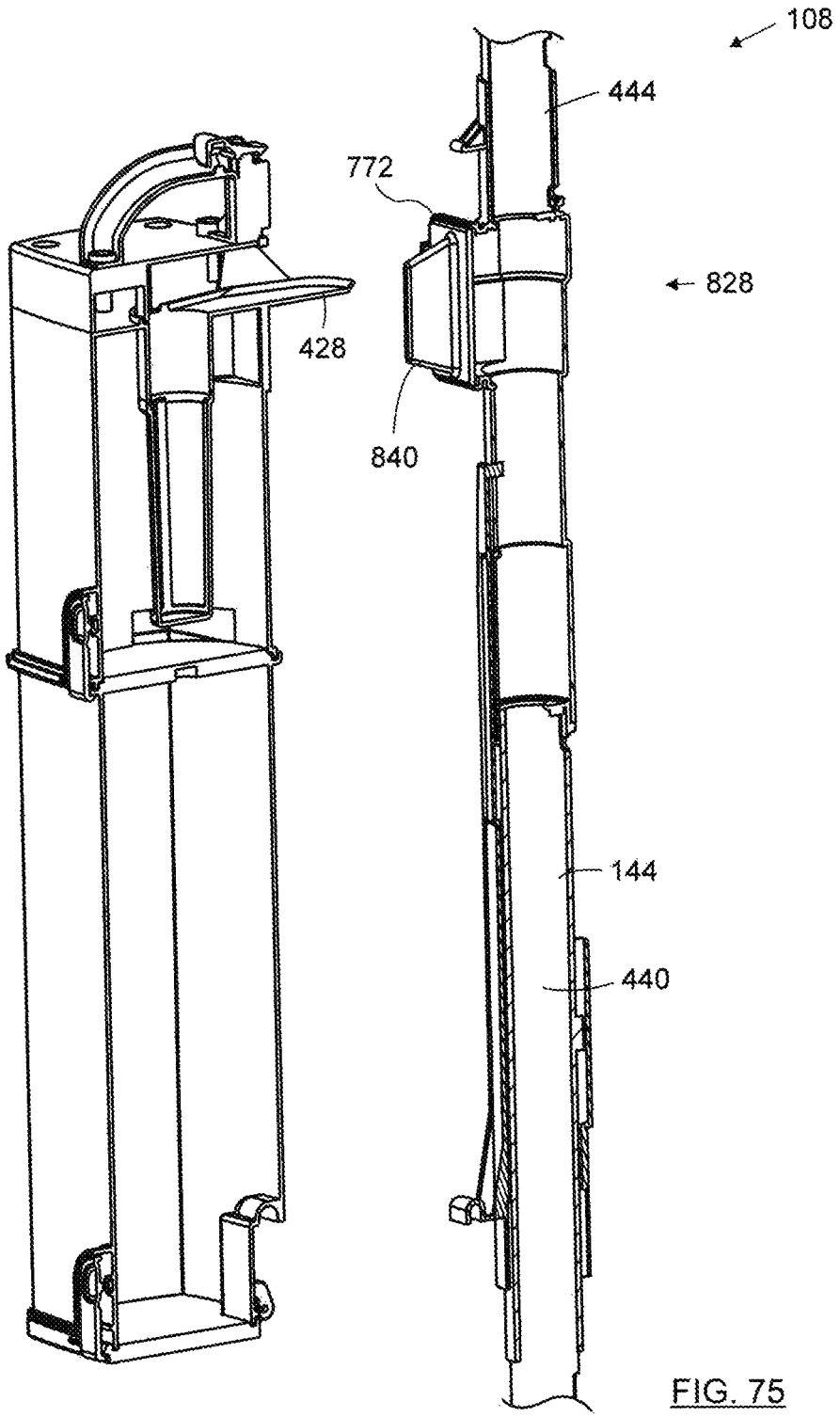

FIG. 75

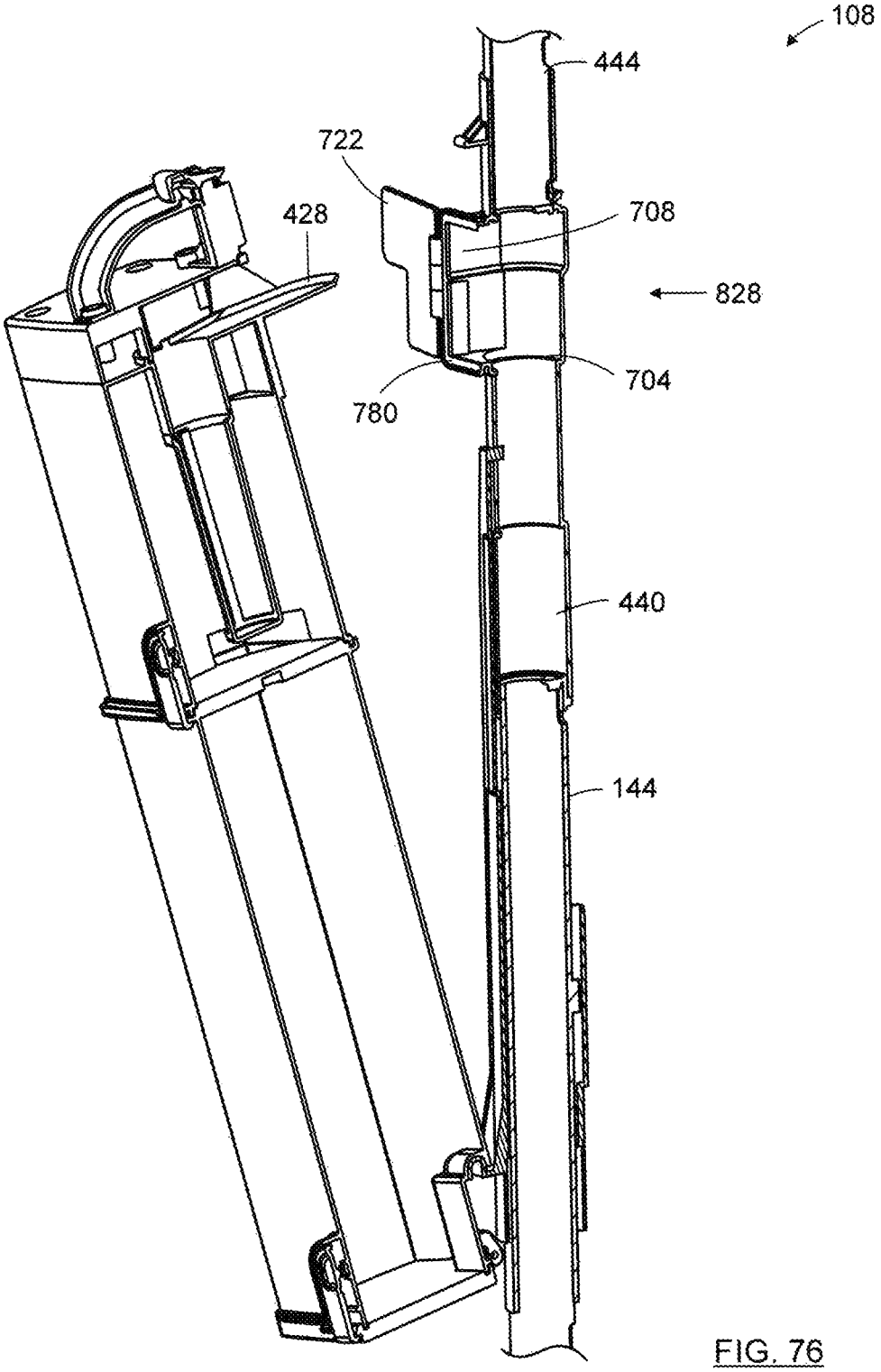

FIG. 76

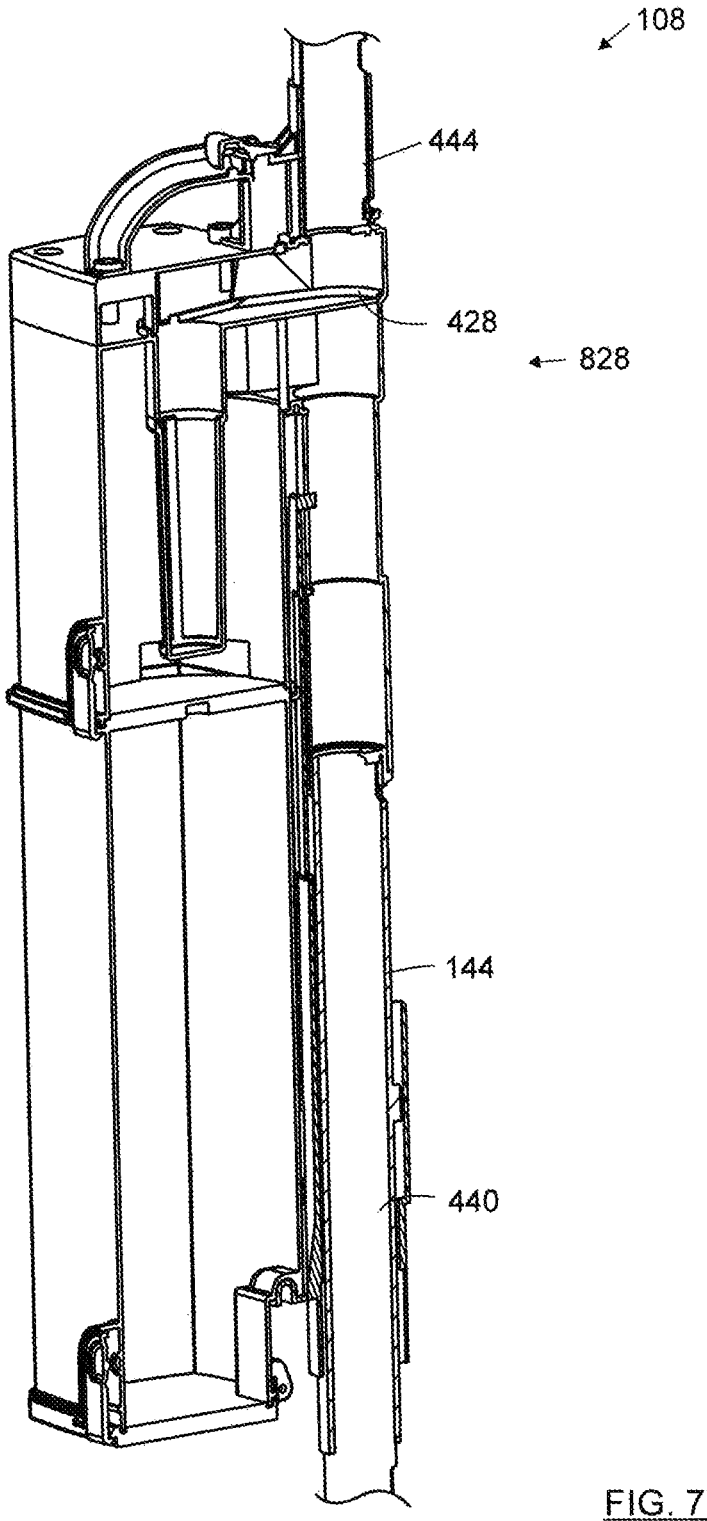

FIG. 77

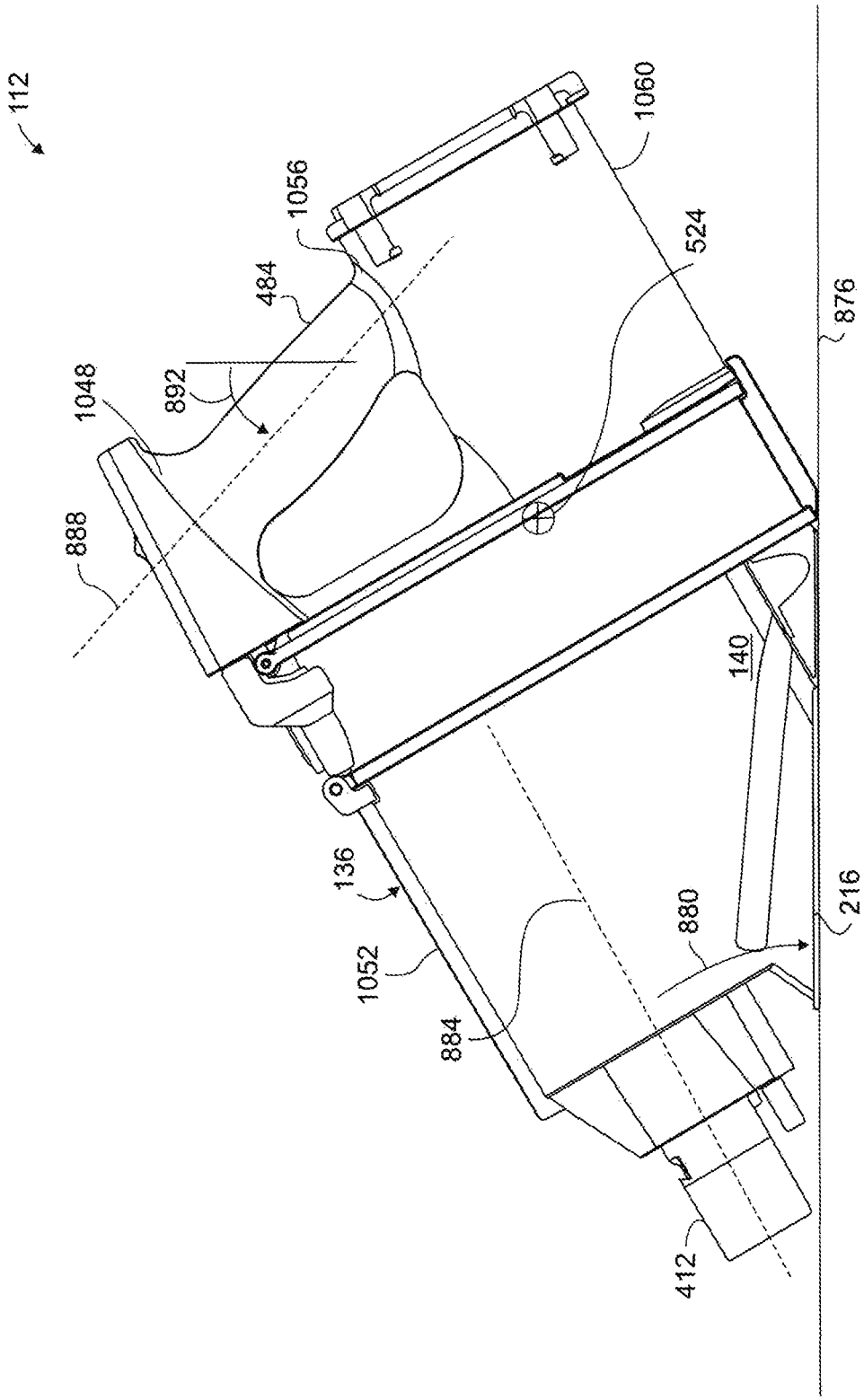
112
1060
1056
484
524
876
1048
892
888
140
136
880
216
1052
884
412

FIG. 78

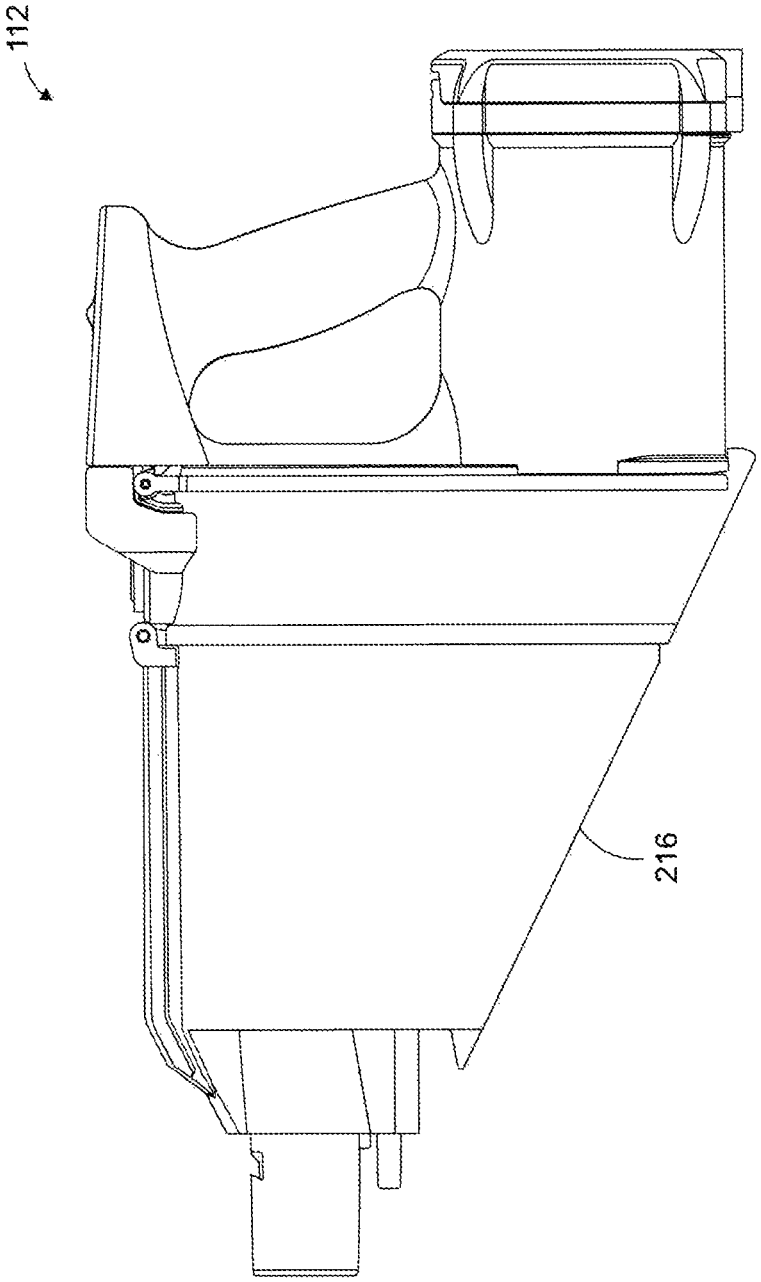

FIG. 79

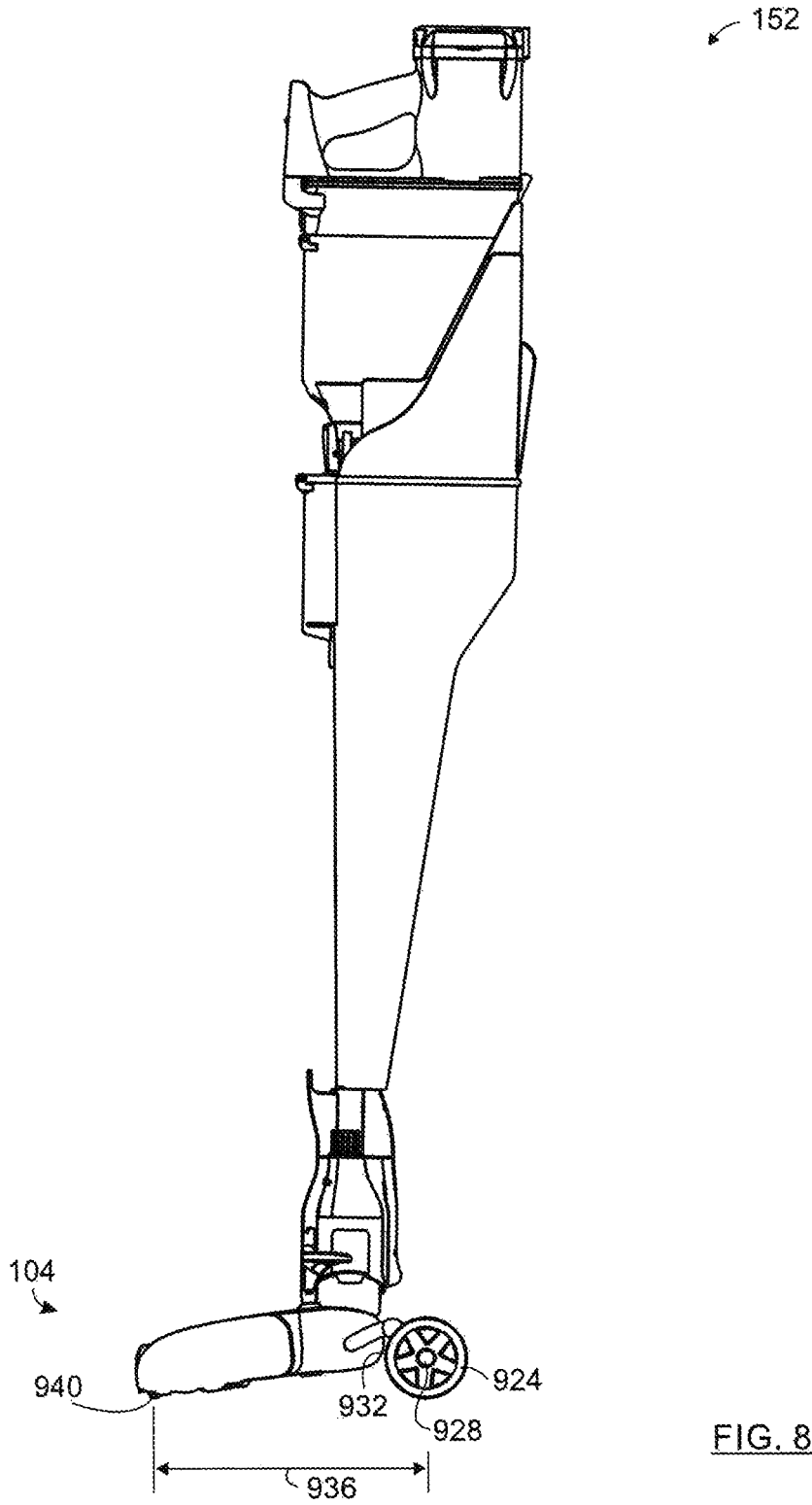

FIG. 80

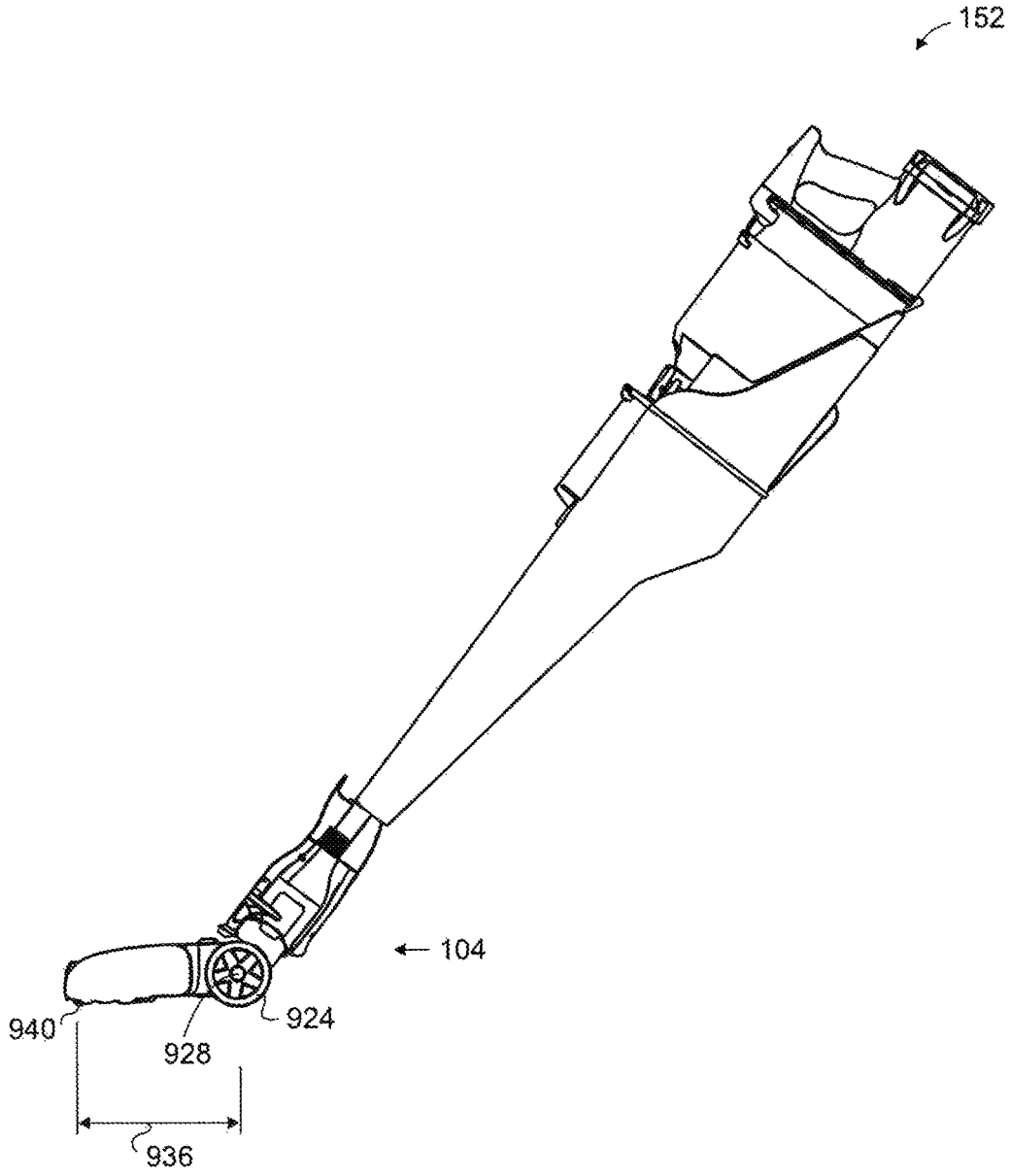

FIG. 81

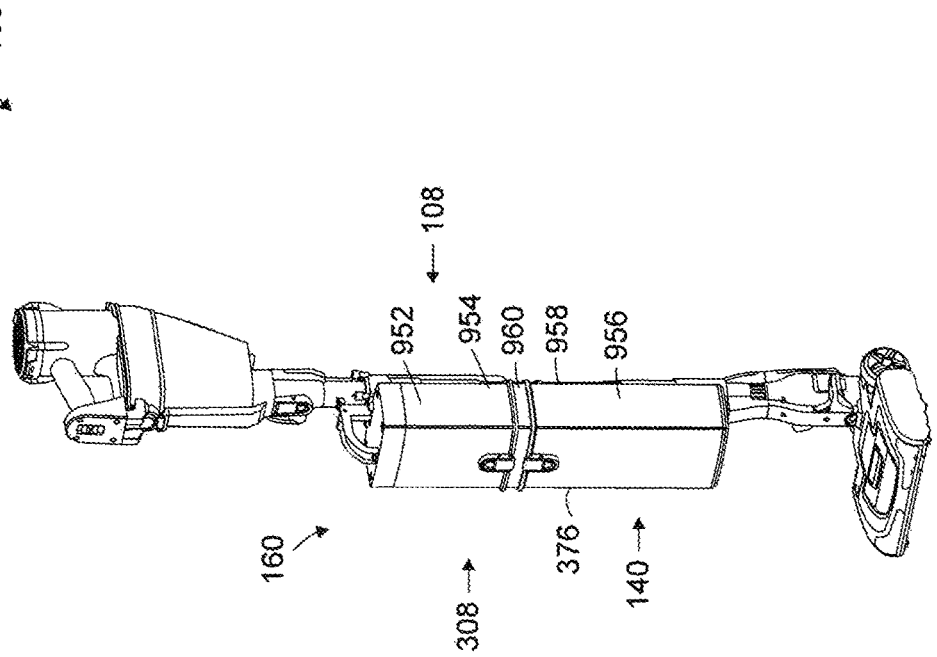

FIG. 82

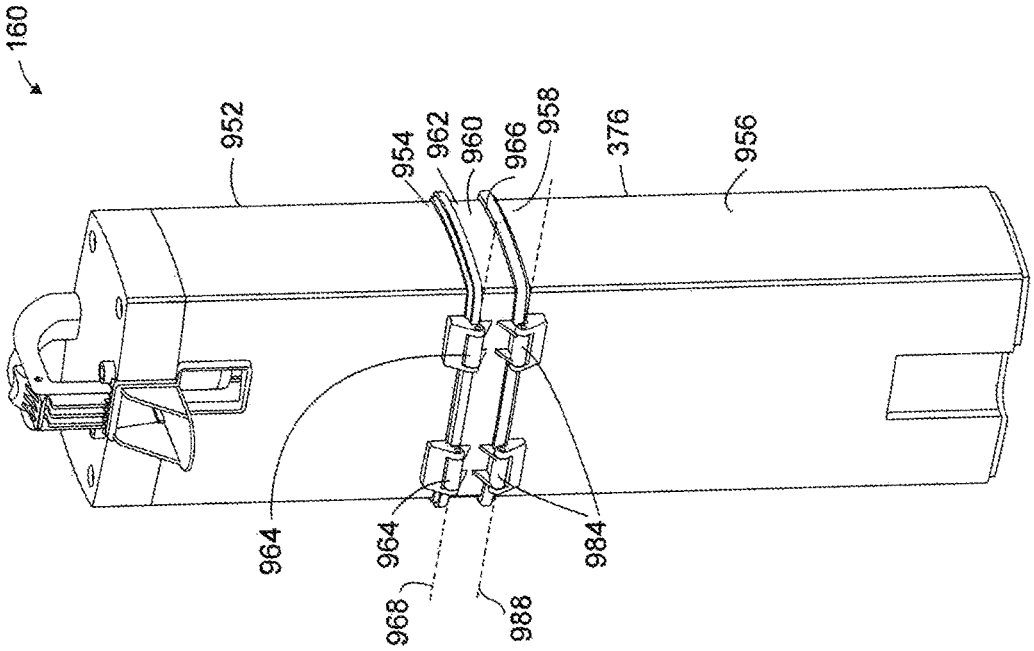

FIG. 83

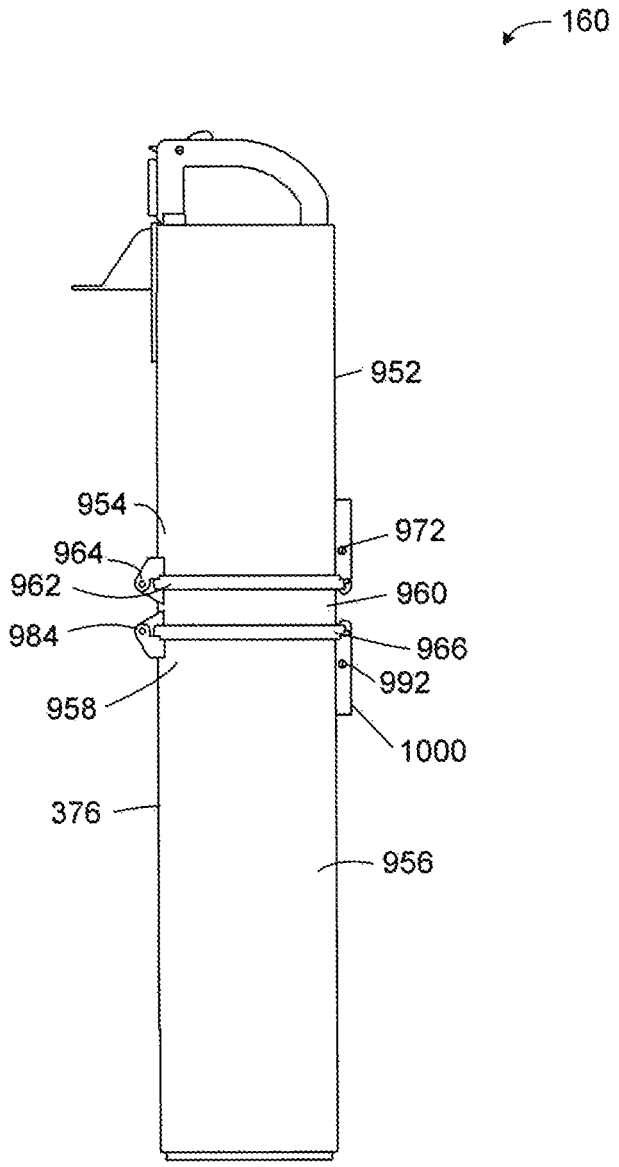

FIG. 84

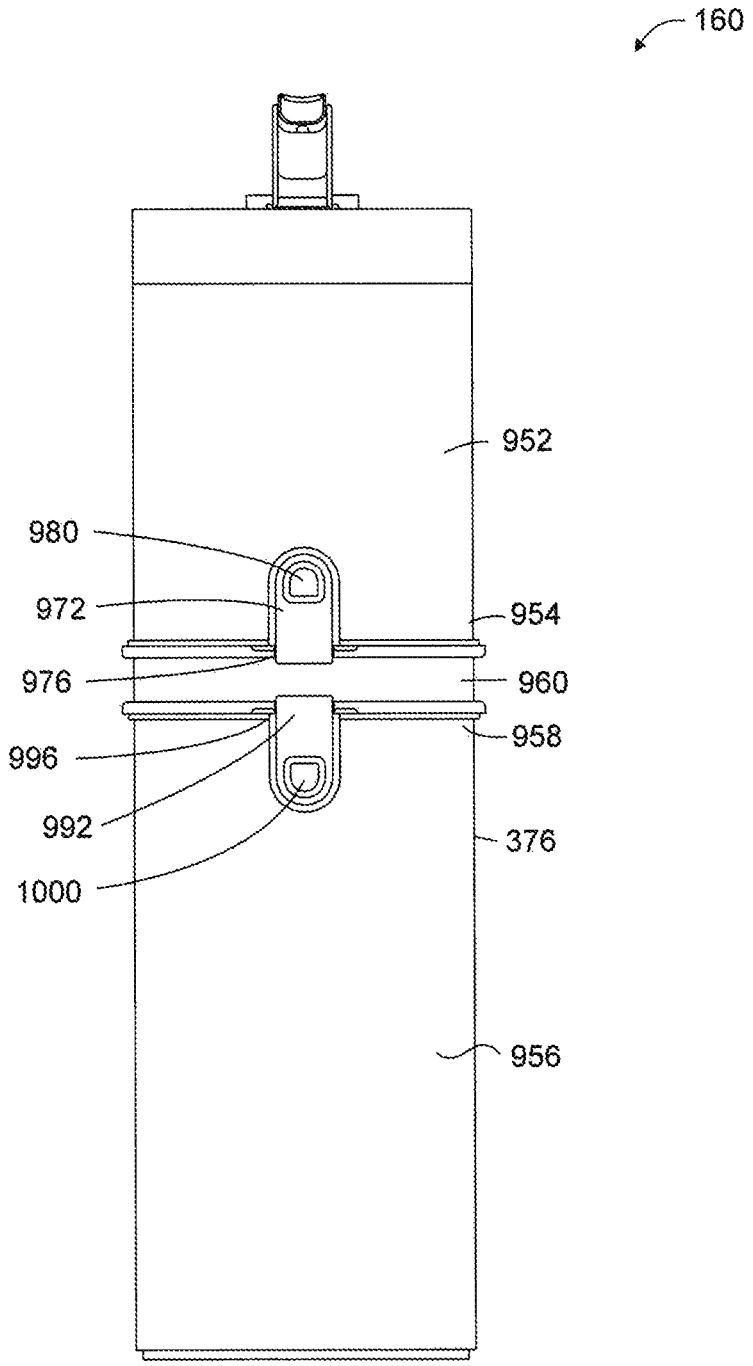

FIG. 85

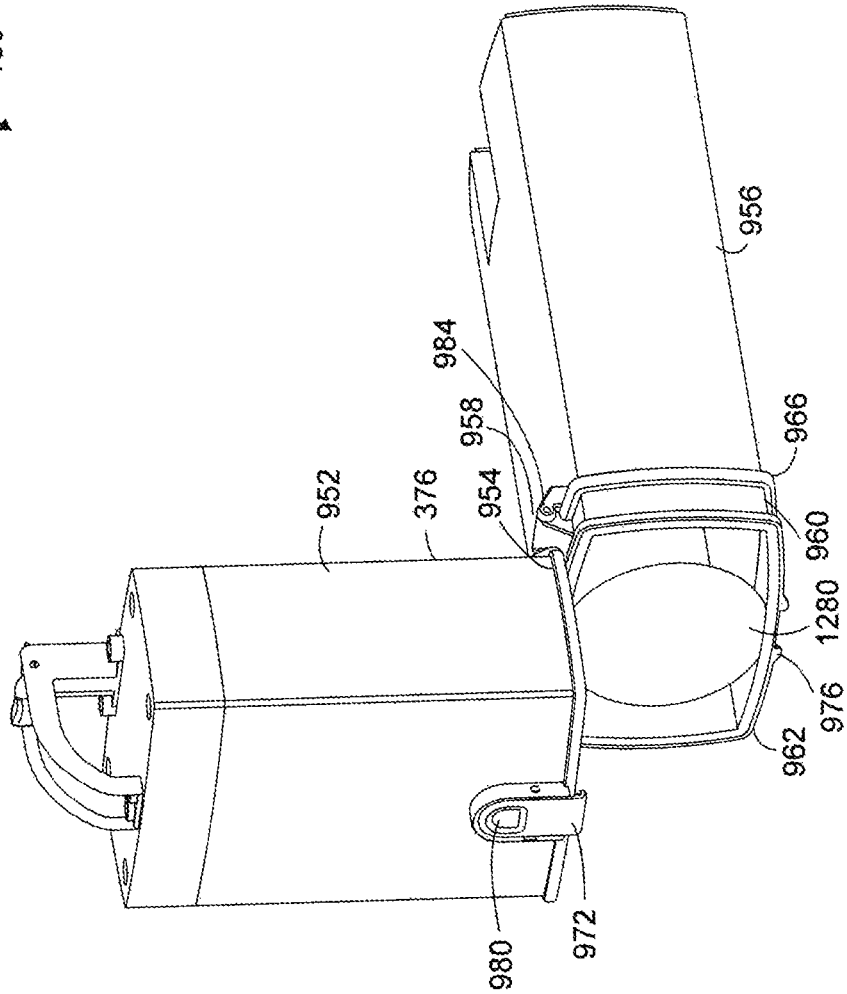

FIG. 86

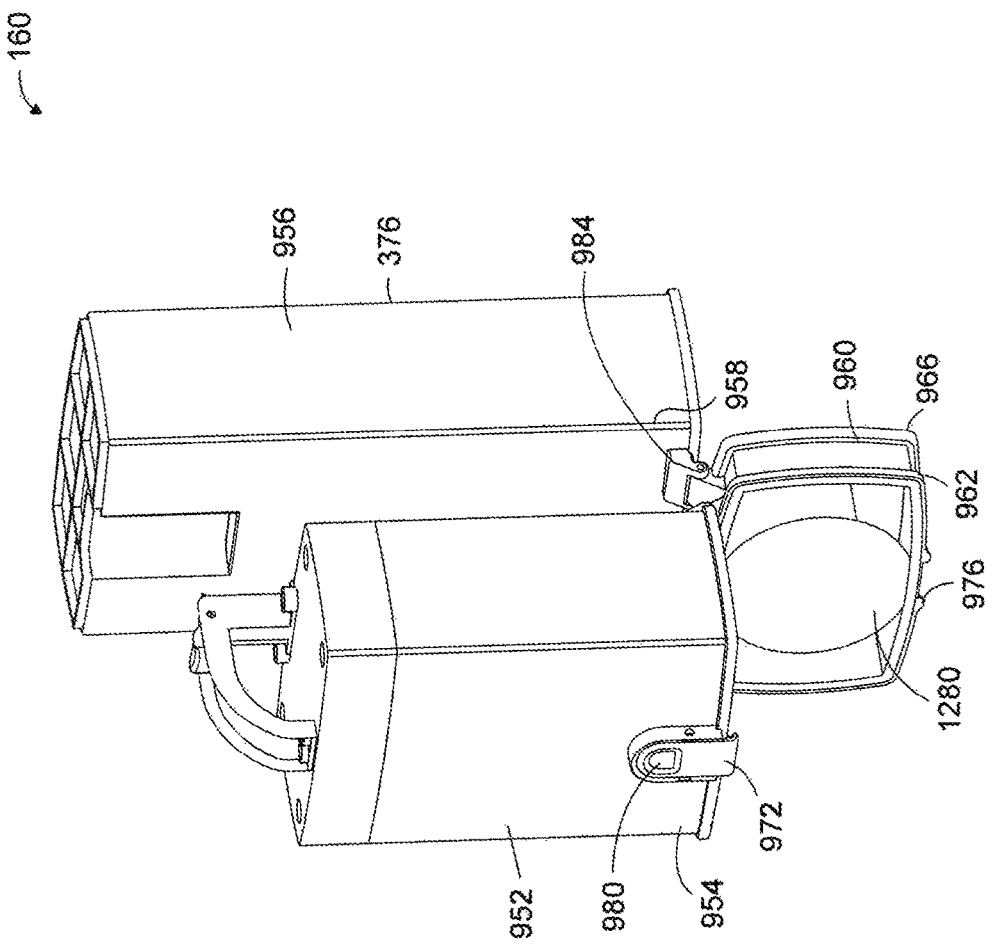

FIG. 87

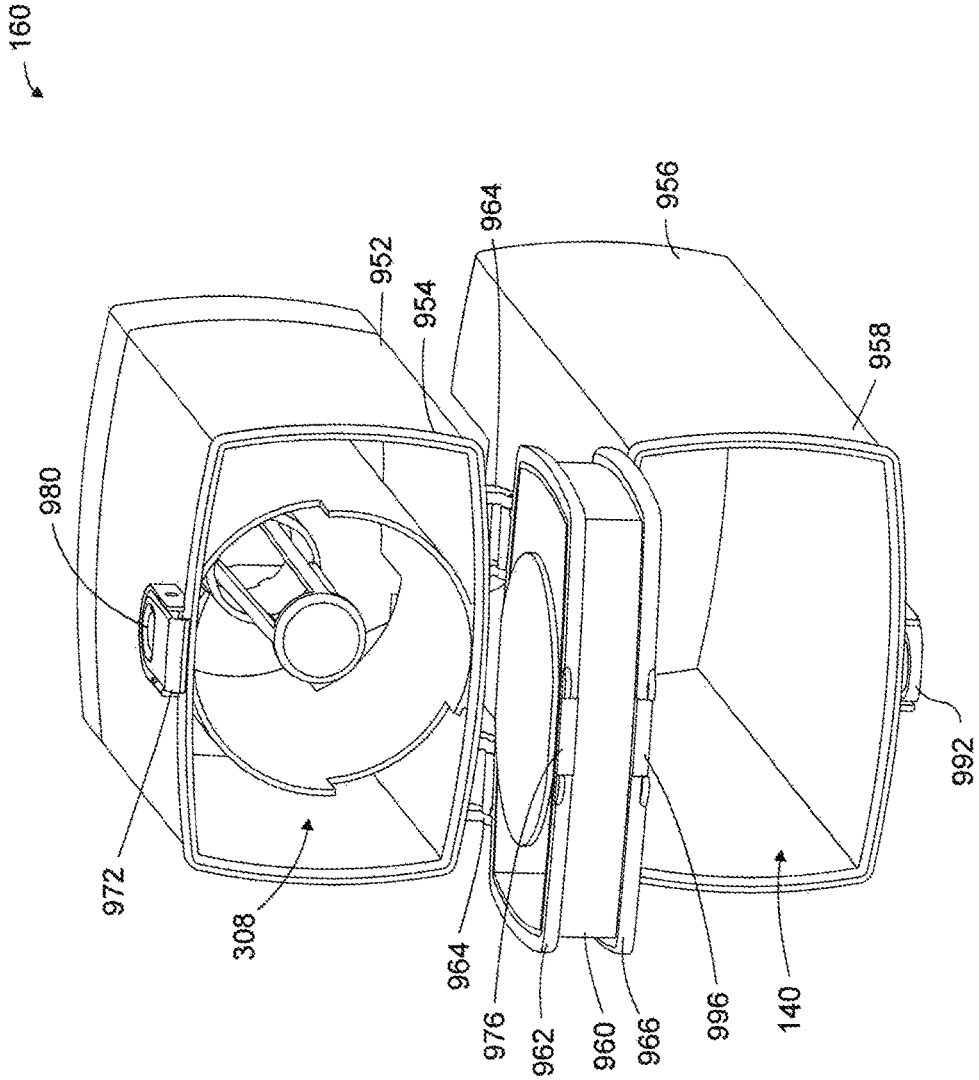
160
980
972
308
952
954
964
964
976
962
960
966
996
140
956
958
992

FIG. 88

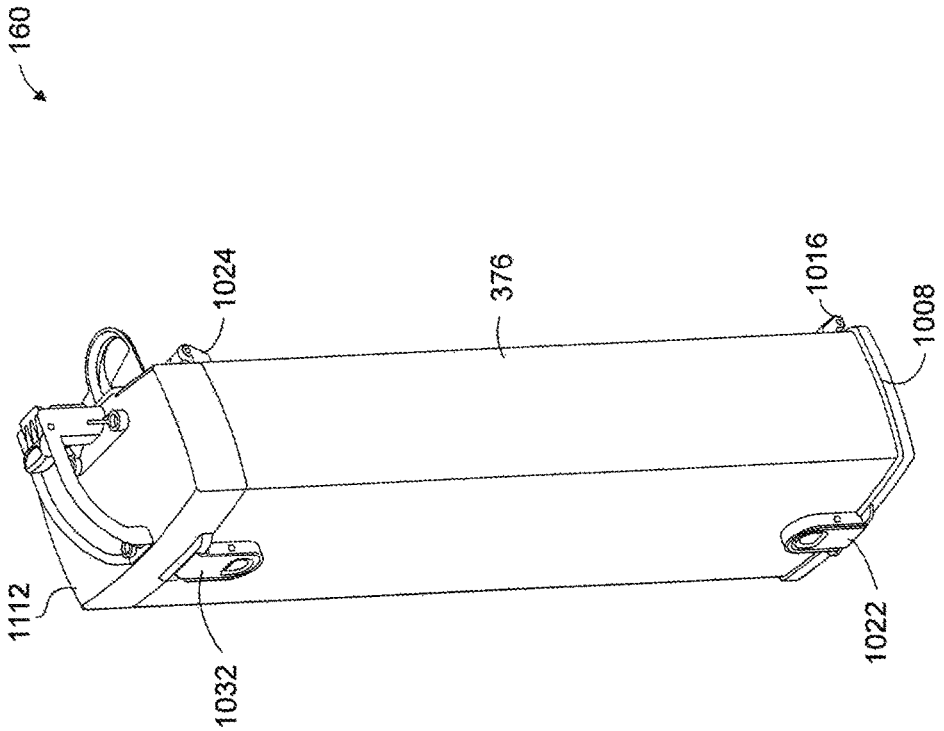

FIG. 89

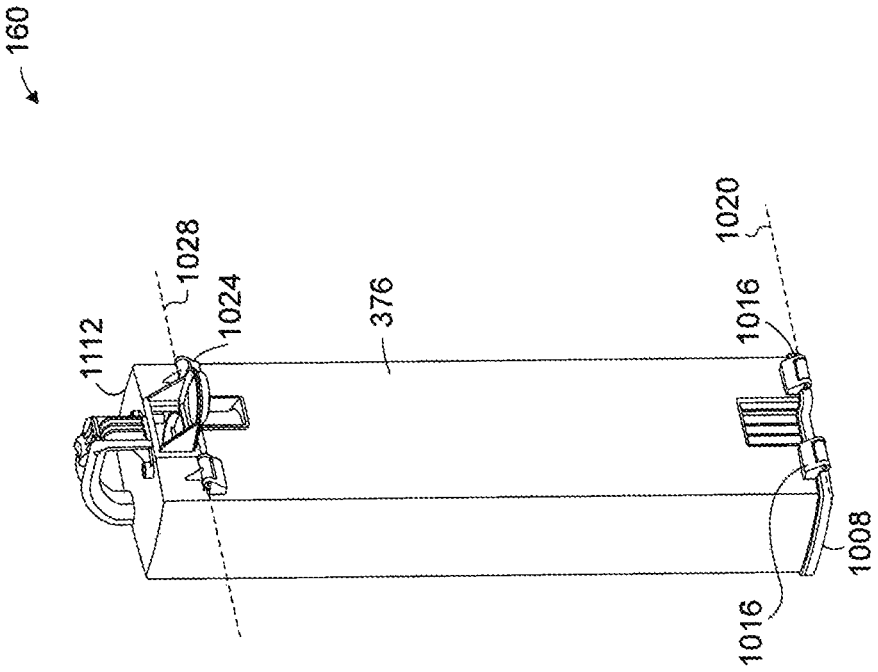

FIG. 90

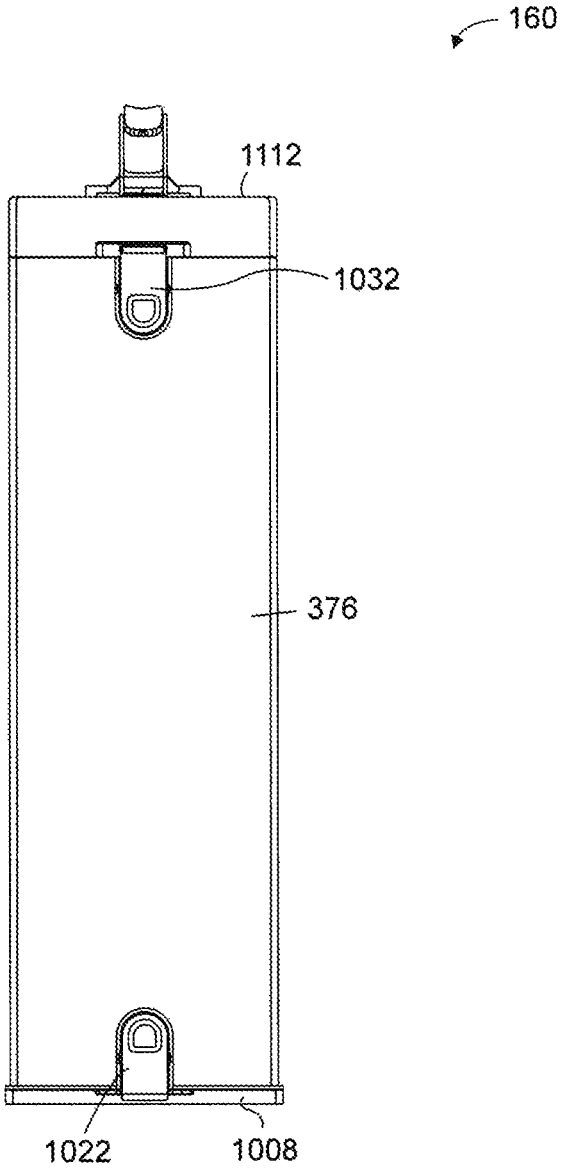

FIG. 91

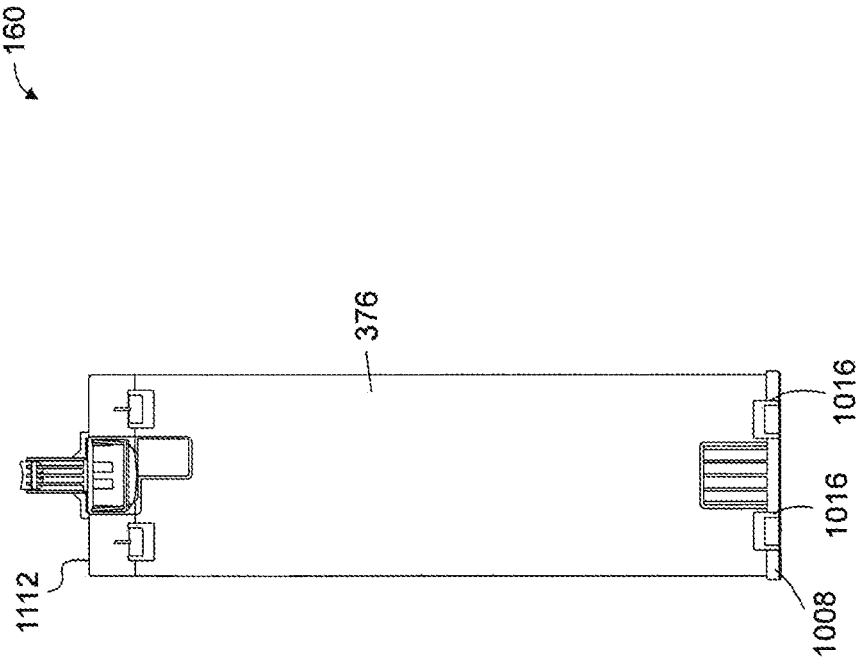

FIG. 92

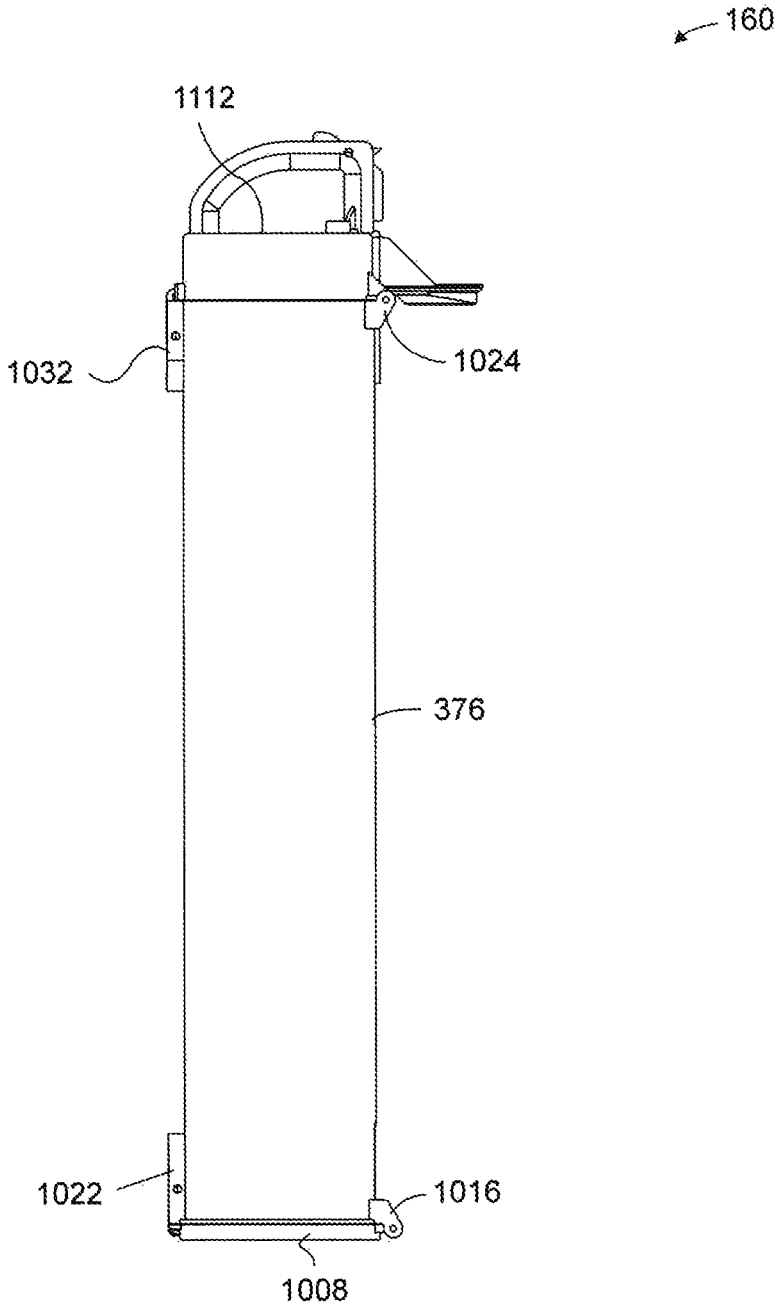

FIG. 93

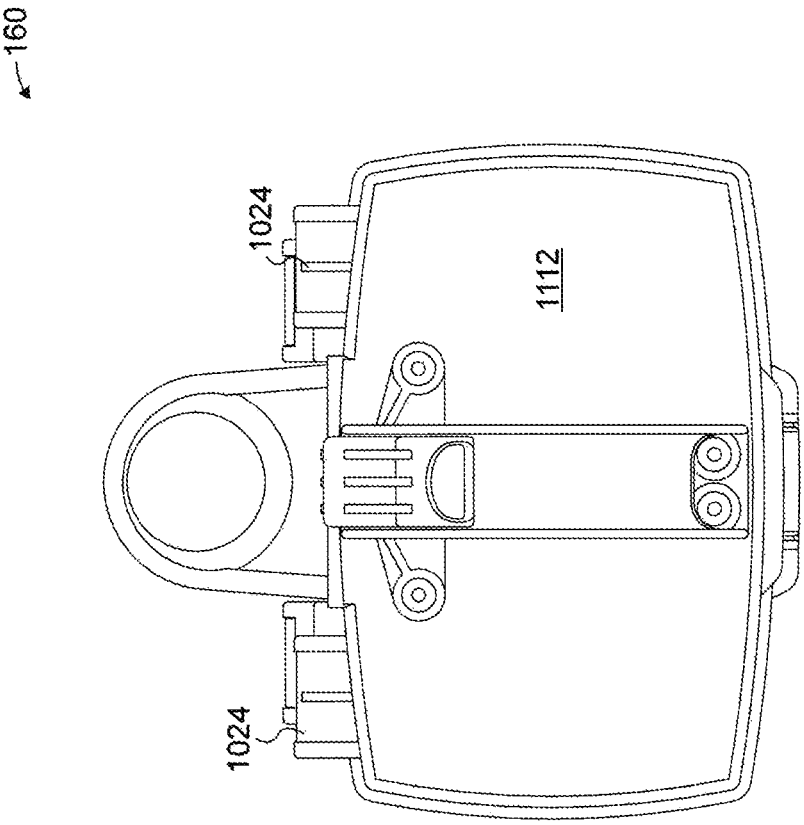

FIG. 94

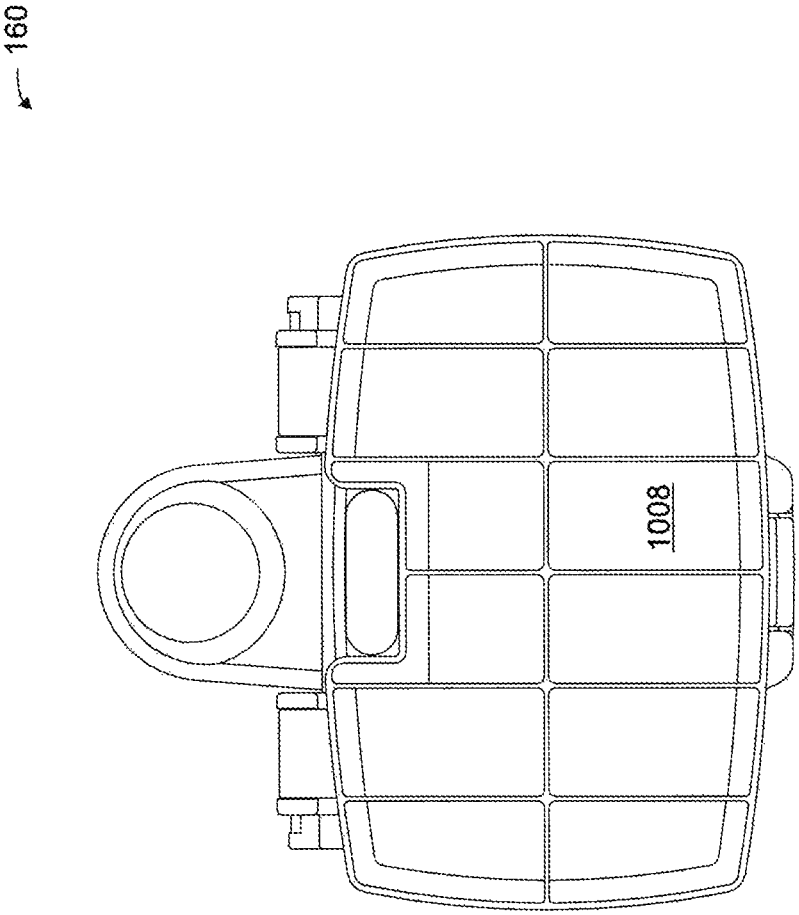

FIG. 95

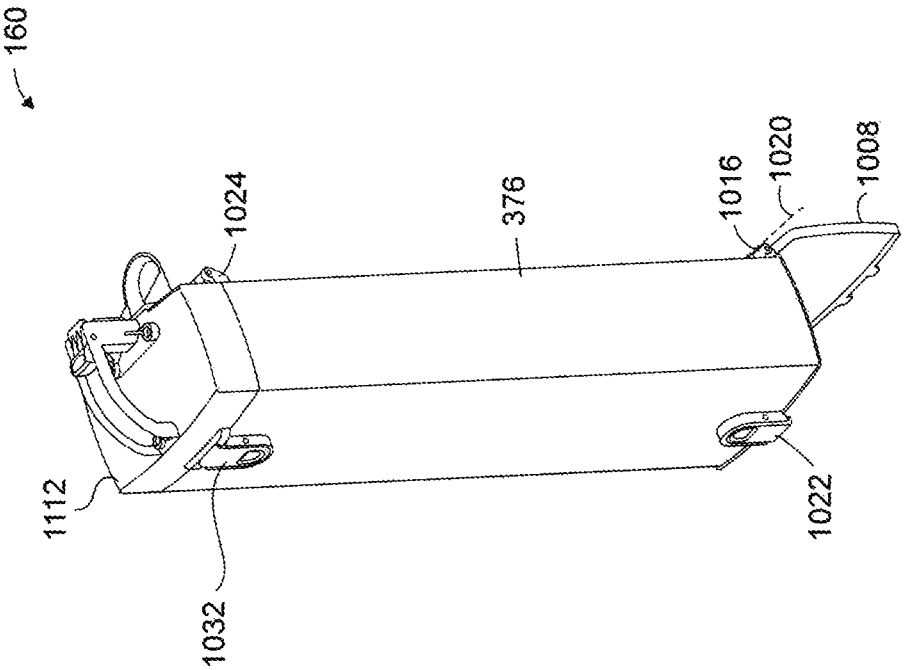

FIG. 95b

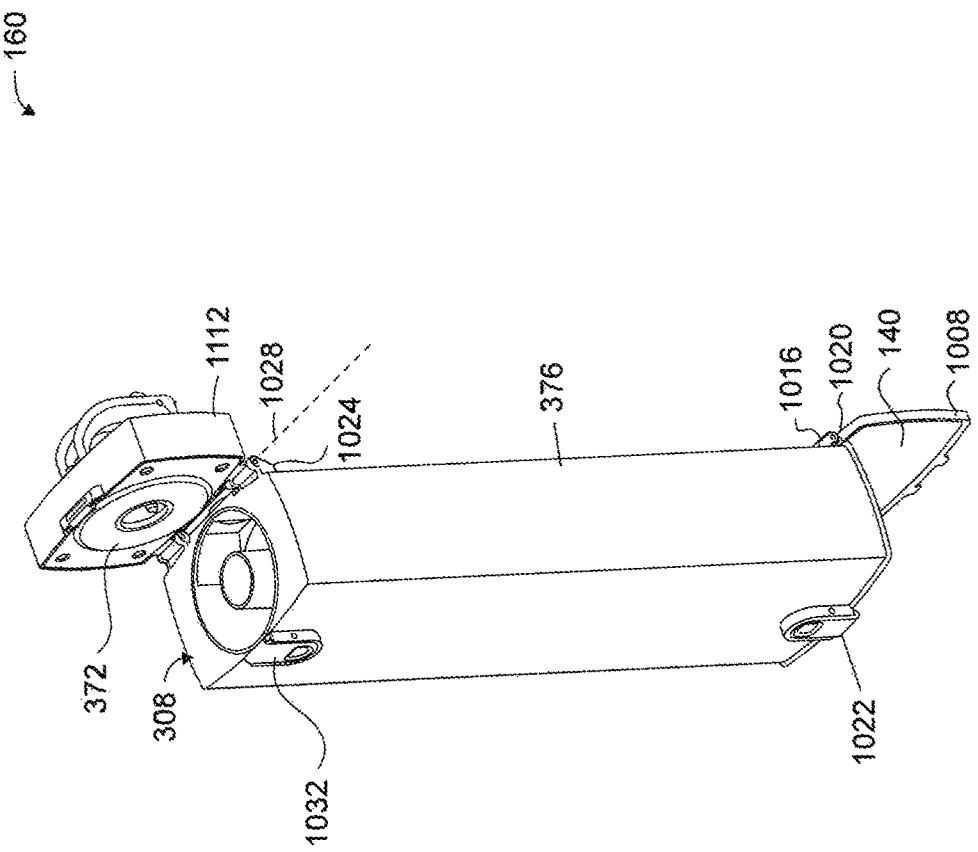

FIG. 95c

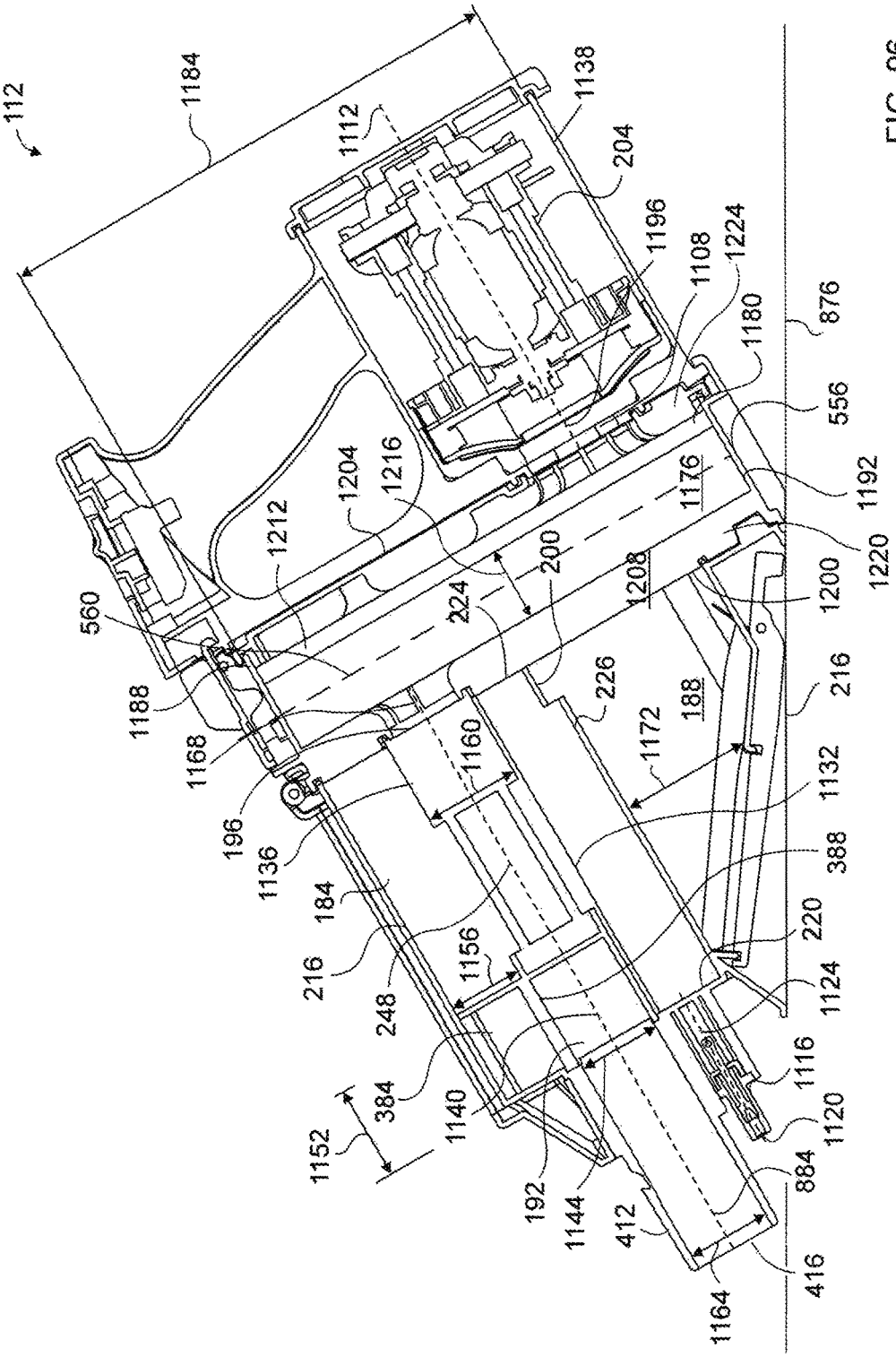
112
1184
1112
1138
204
1196
1108
1224
1180
876
556
1192
1220
1200
1176
1208
200
224
1204
1216
1212
560
1188
1168
196
1136
1160
226
1172
188
216
1132
388
220
1124
1116
1120
884
416
1164
412
1144
192
1140
384
248
1156
184
216
1152

FIG. 96

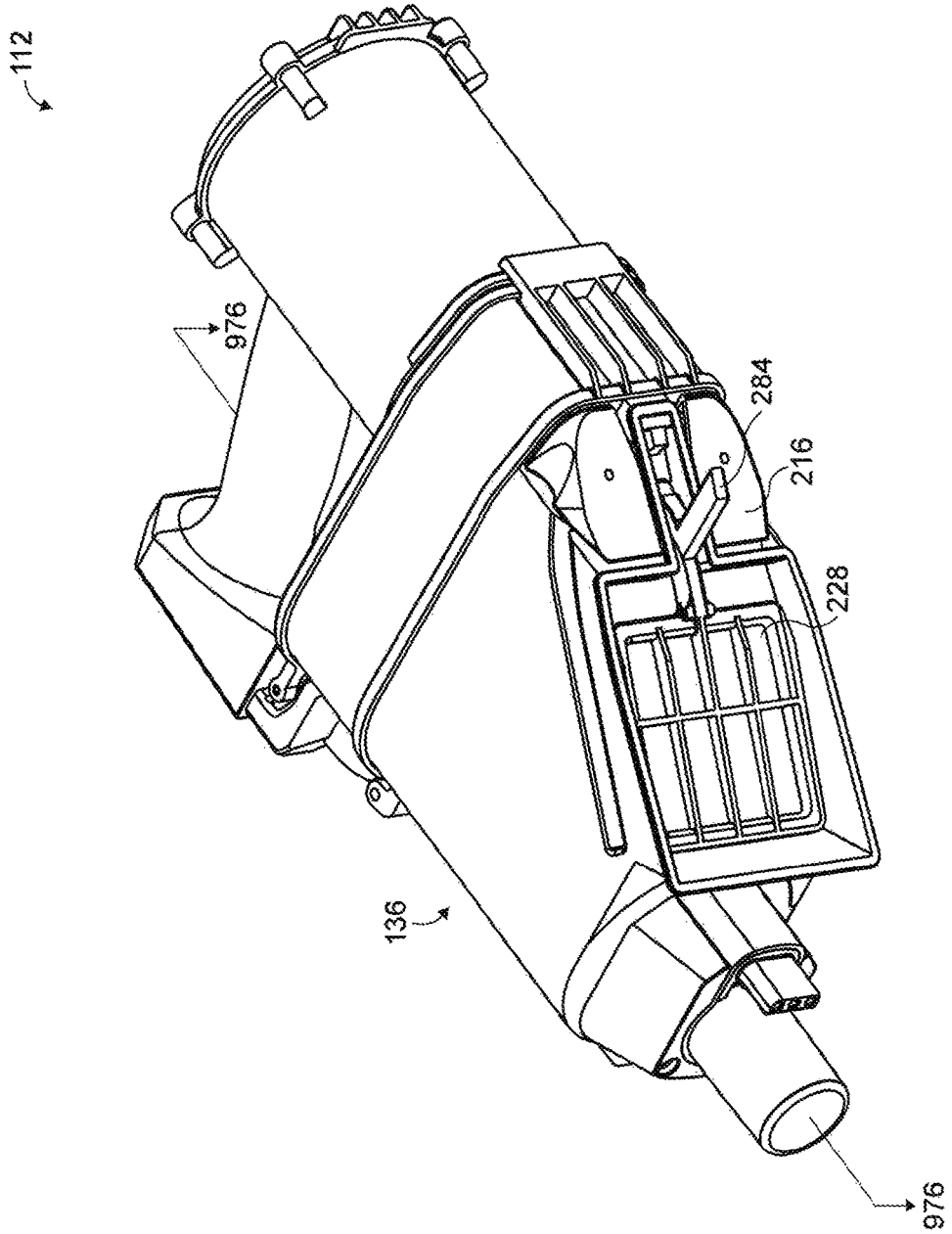

FIG. 97a

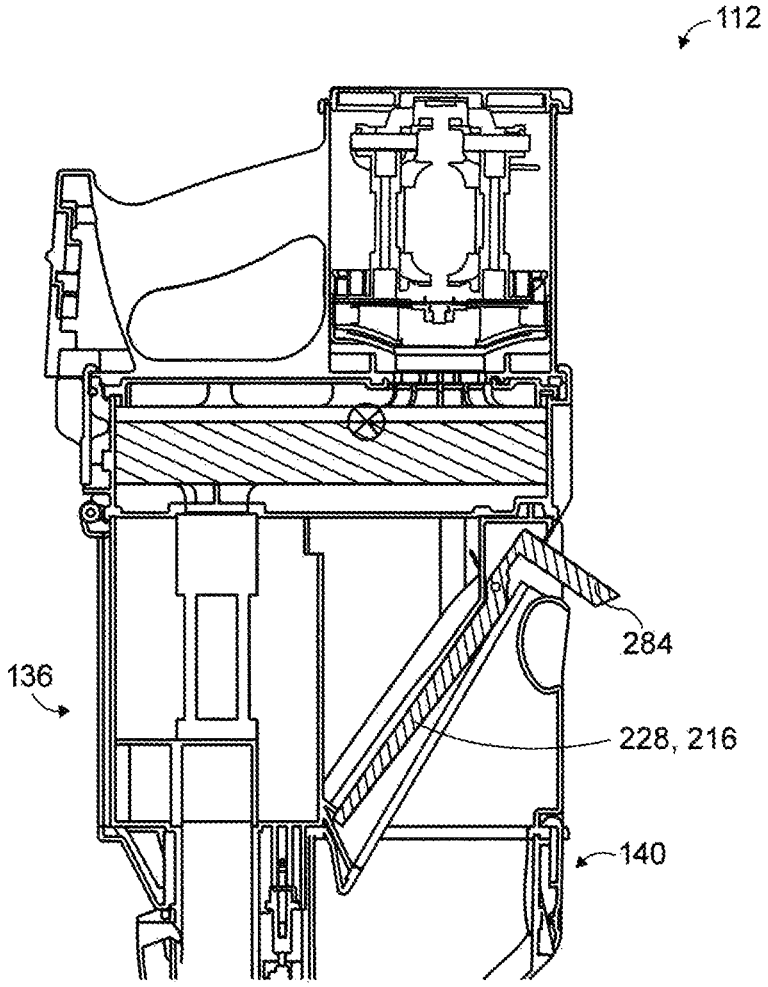

FIG. 97b

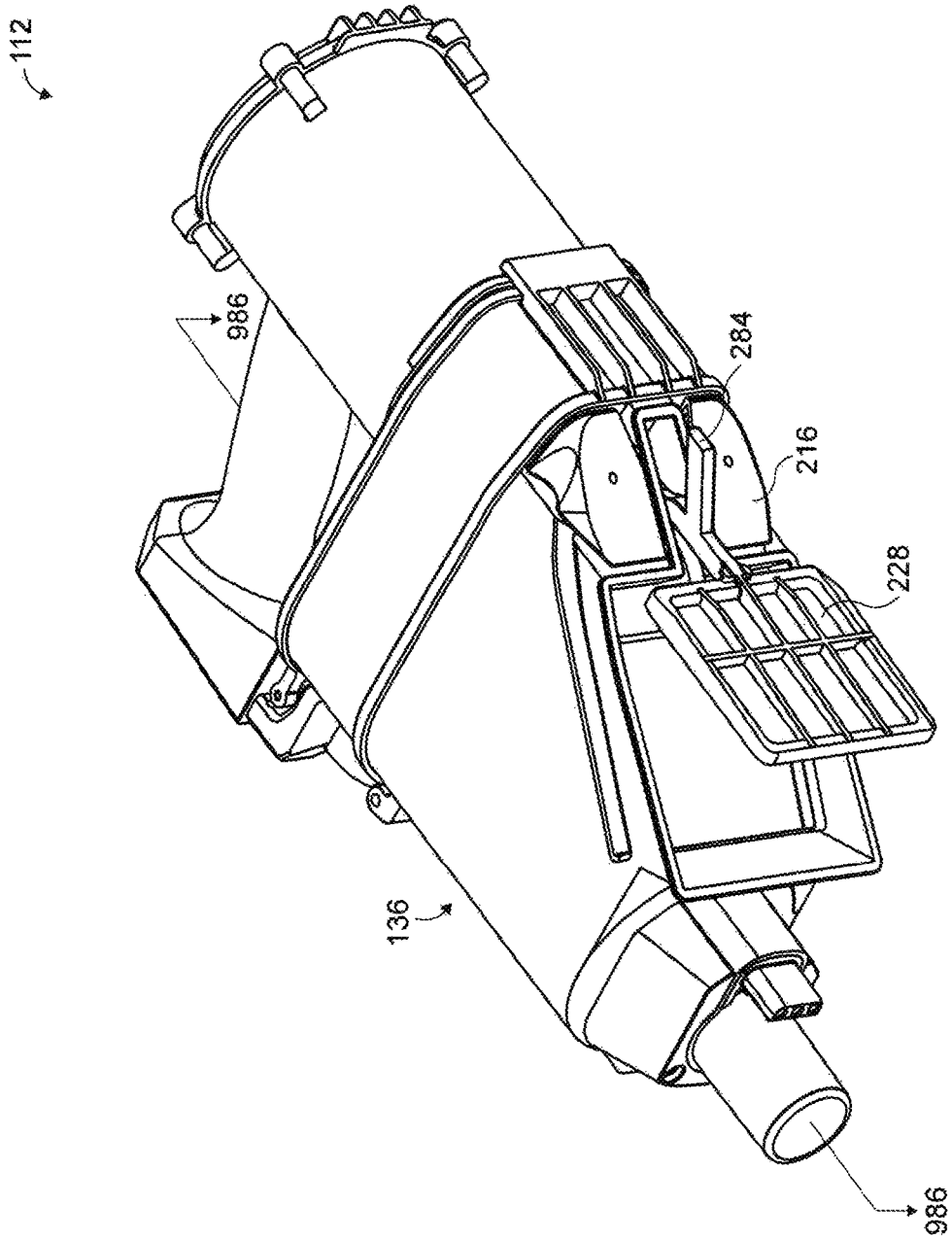

FIG. 98a

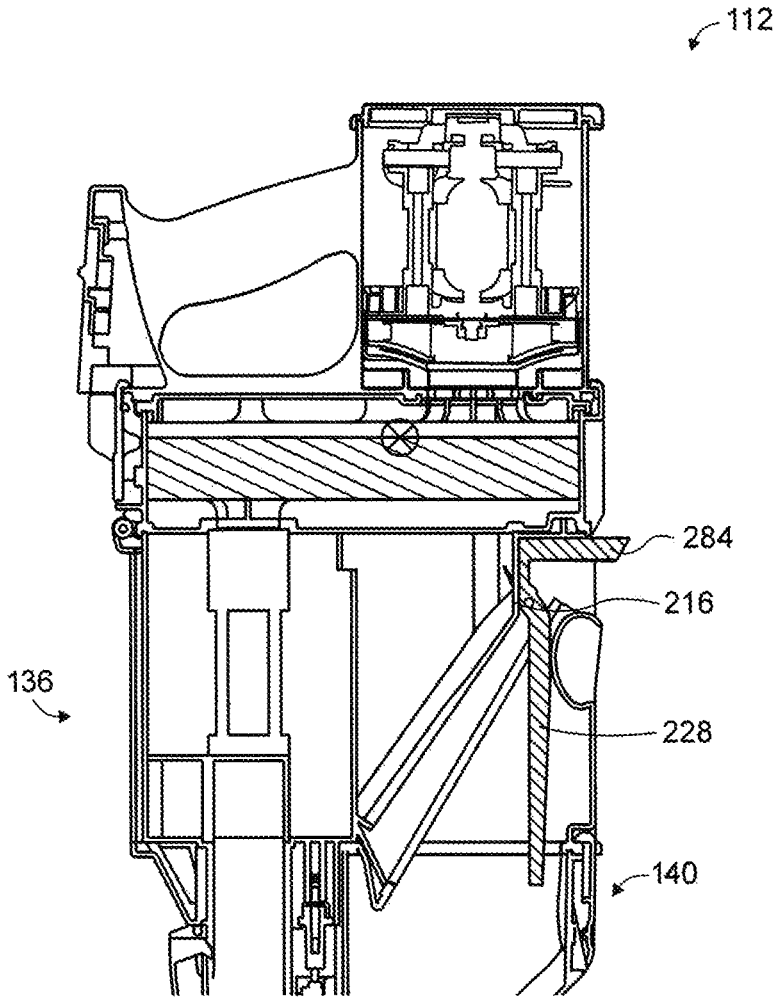

FIG. 98b

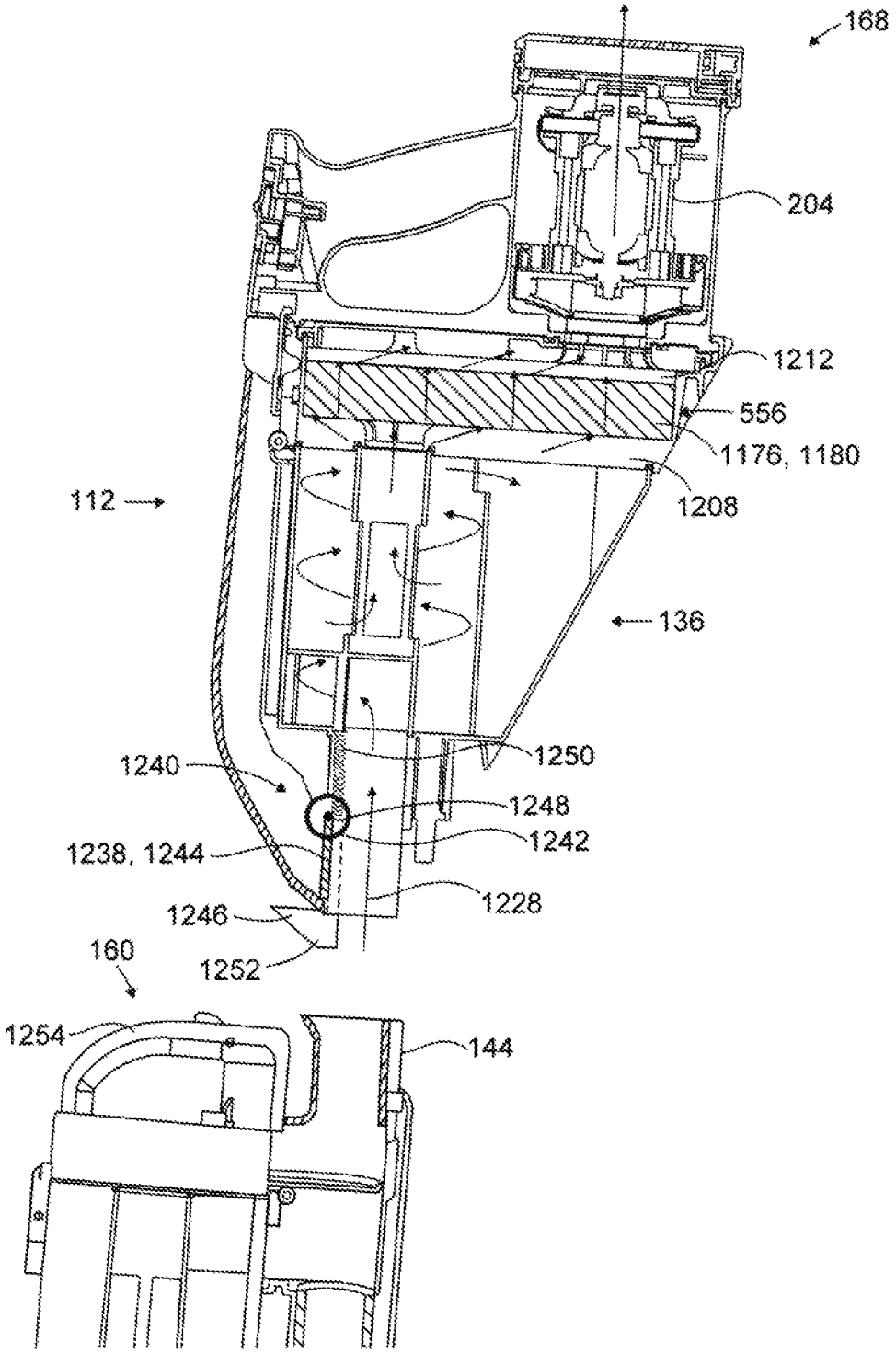
168
204
1212
556
1176, 1180
1208
112
136
1250
1240
1248
1242
1238, 1244
1228
1246
1252
160
1254
144

FIG. 99

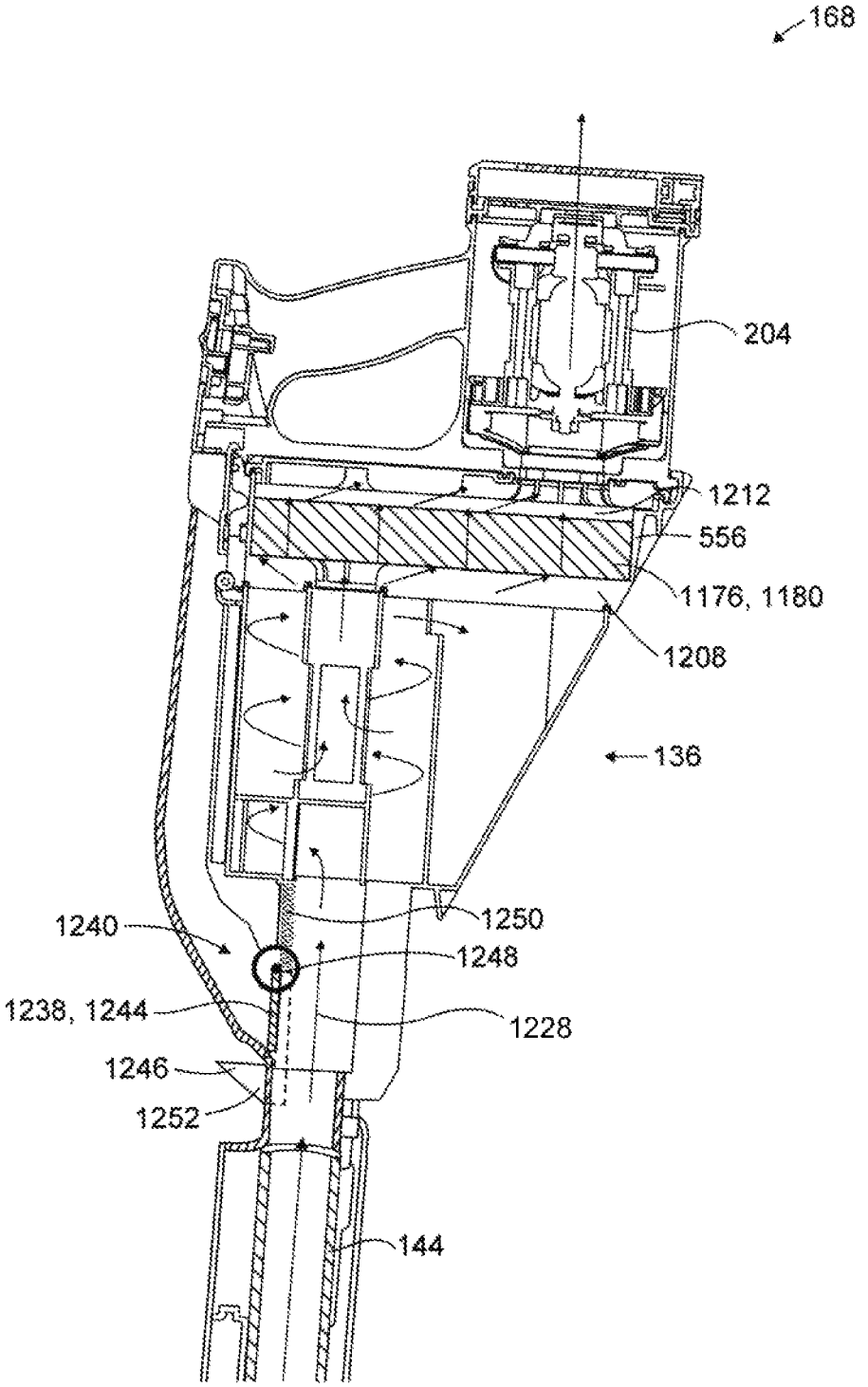
168
204
1212
556
1176, 1180
1208
136
1250
1240
1248
1238, 1244
1228
1246
1252
144

FIG. 100

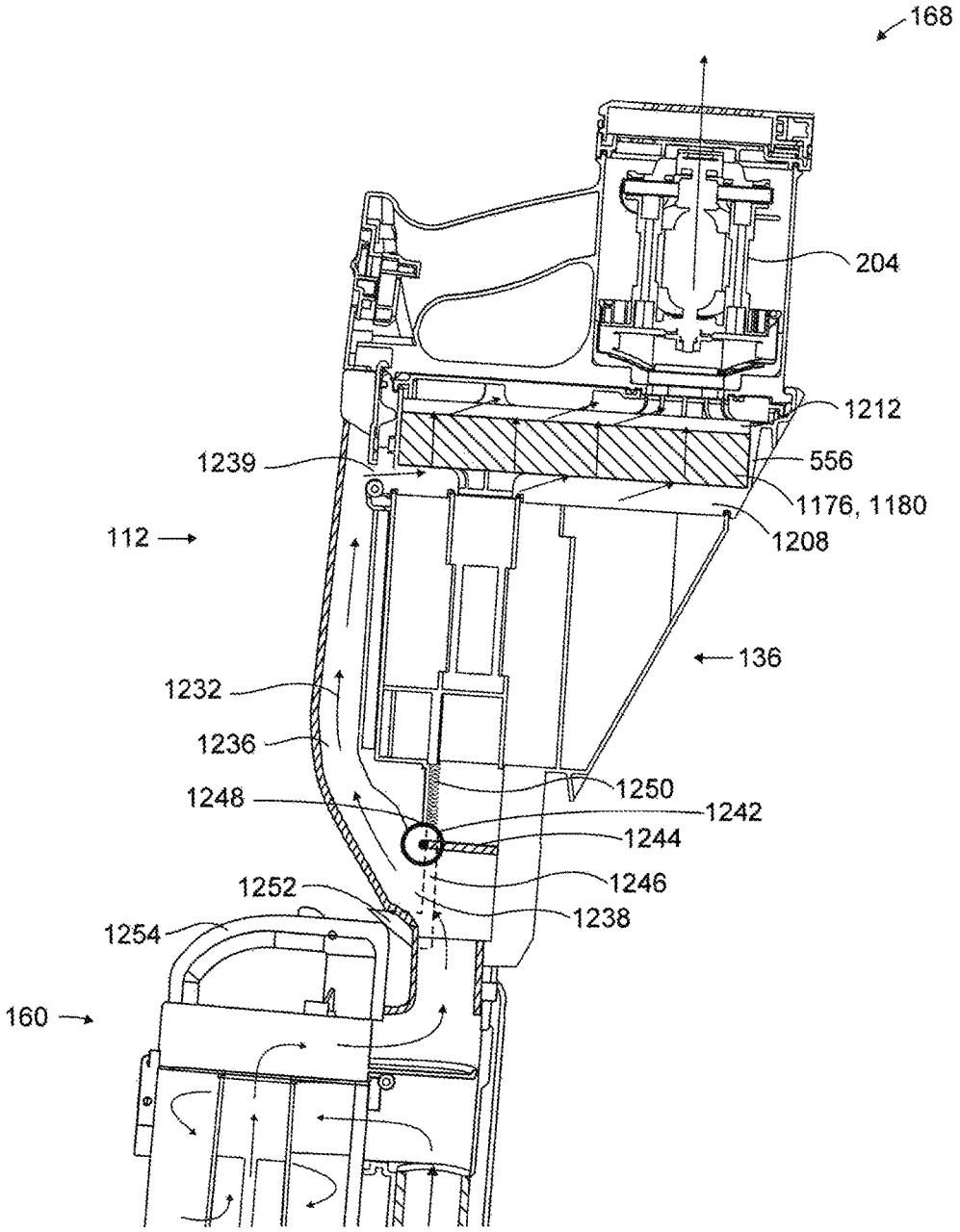
168
204
1212
556
1176, 1180
1208
1239
112
136
1232
1236
1248
1250
1242
1244
1246
1238
1252
1254
160

FIG. 101

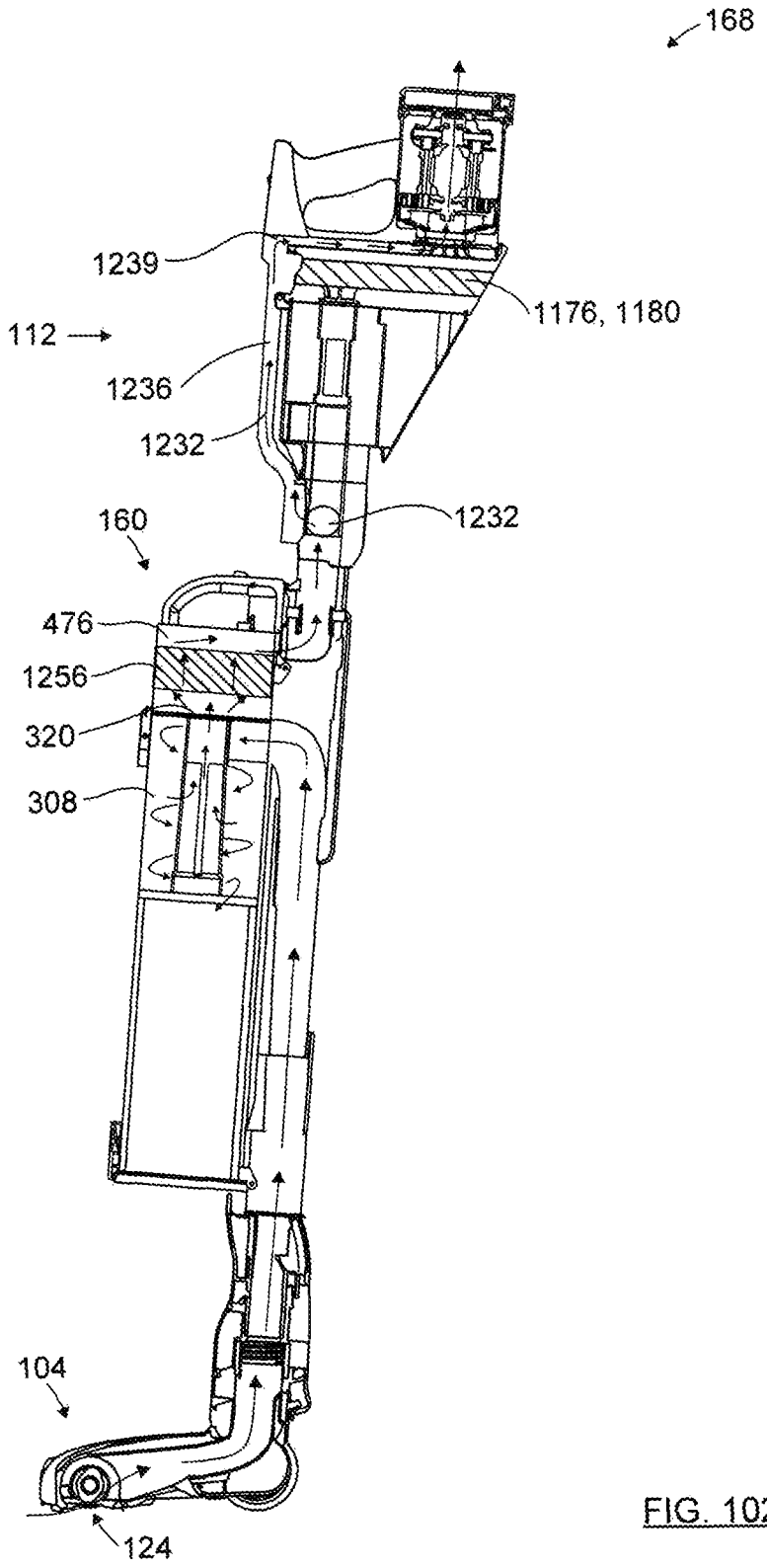
168
1239
1176, 1180
112
1236
1232
1232
160
476
1256
320
308
104
124

FIG. 102

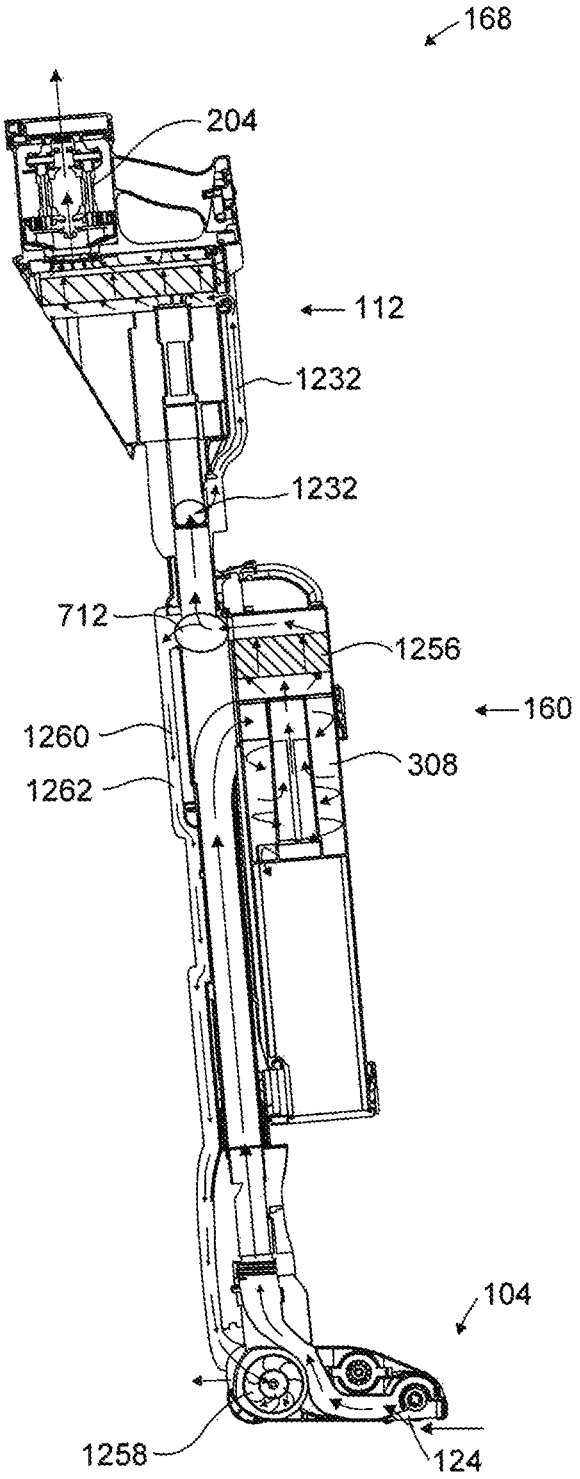

FIG. 103

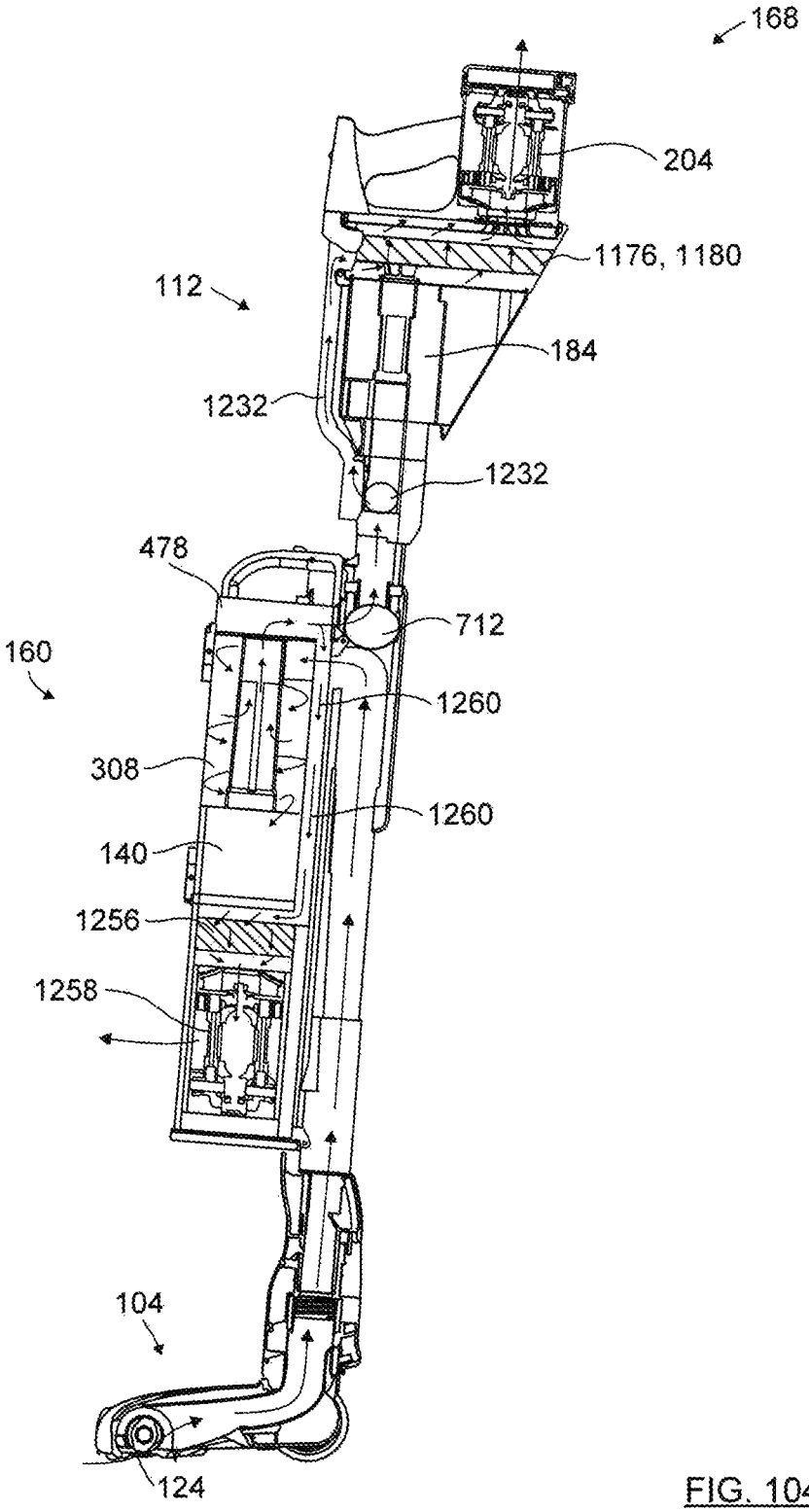
168
204
1176, 1180
112
184
1232
1232
478
712
160
1260
308
1260
140
1256
1258
104
124

FIG. 104a

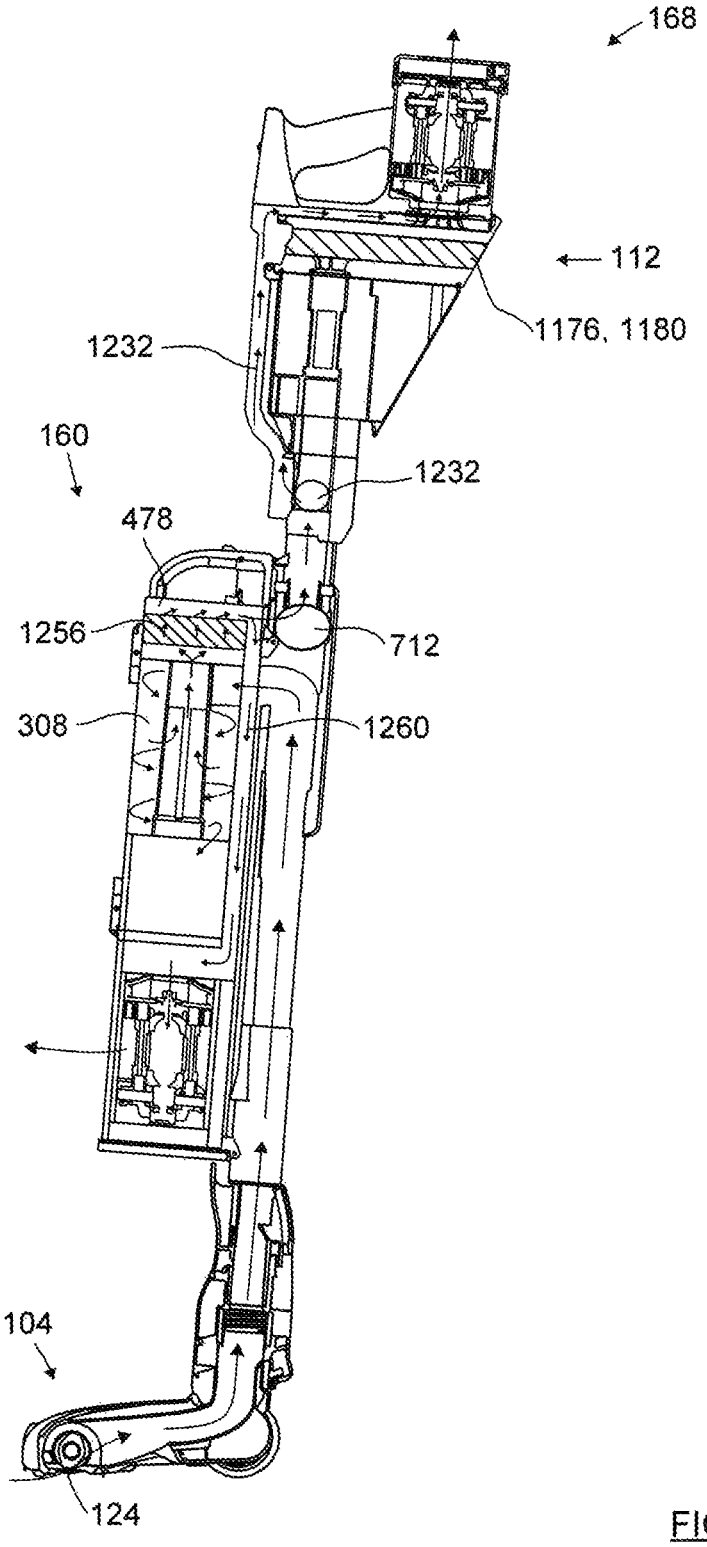

FIG. 104b

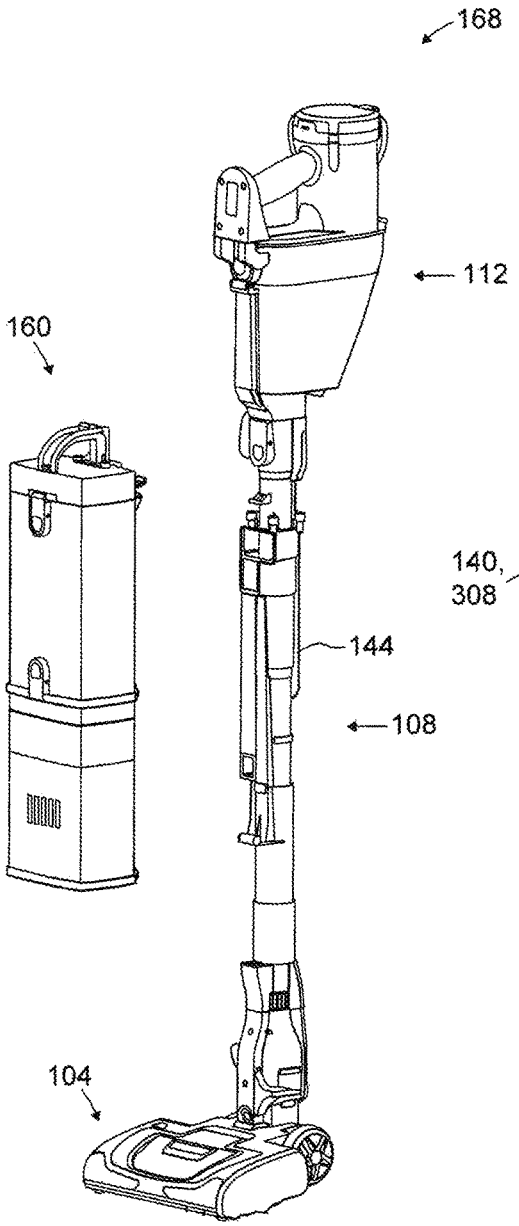

FIG. 105a

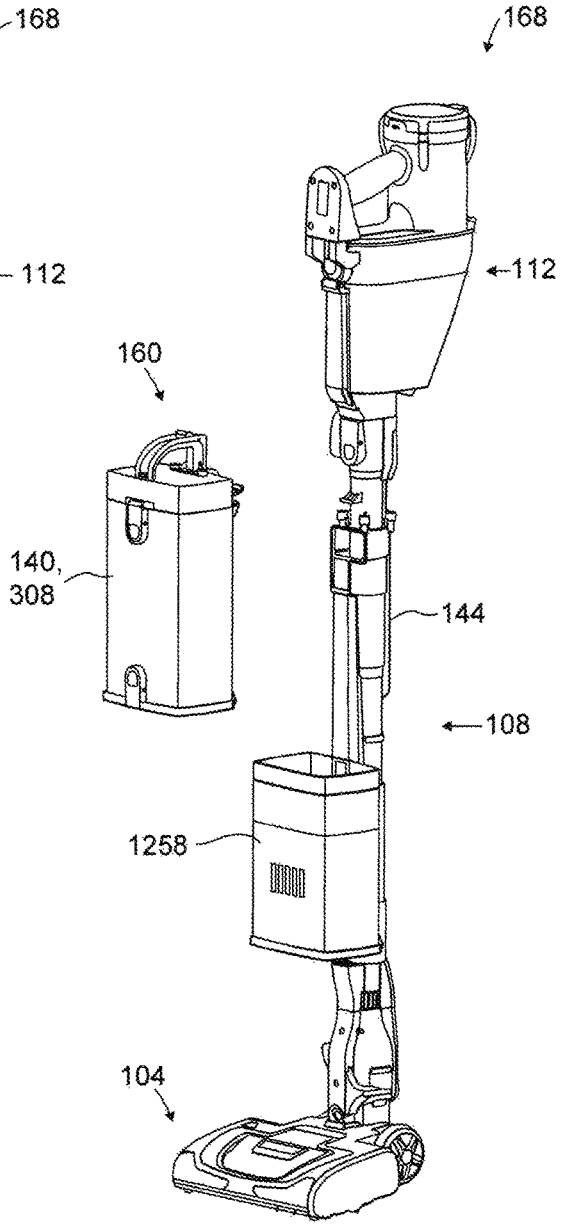

FIG. 105b

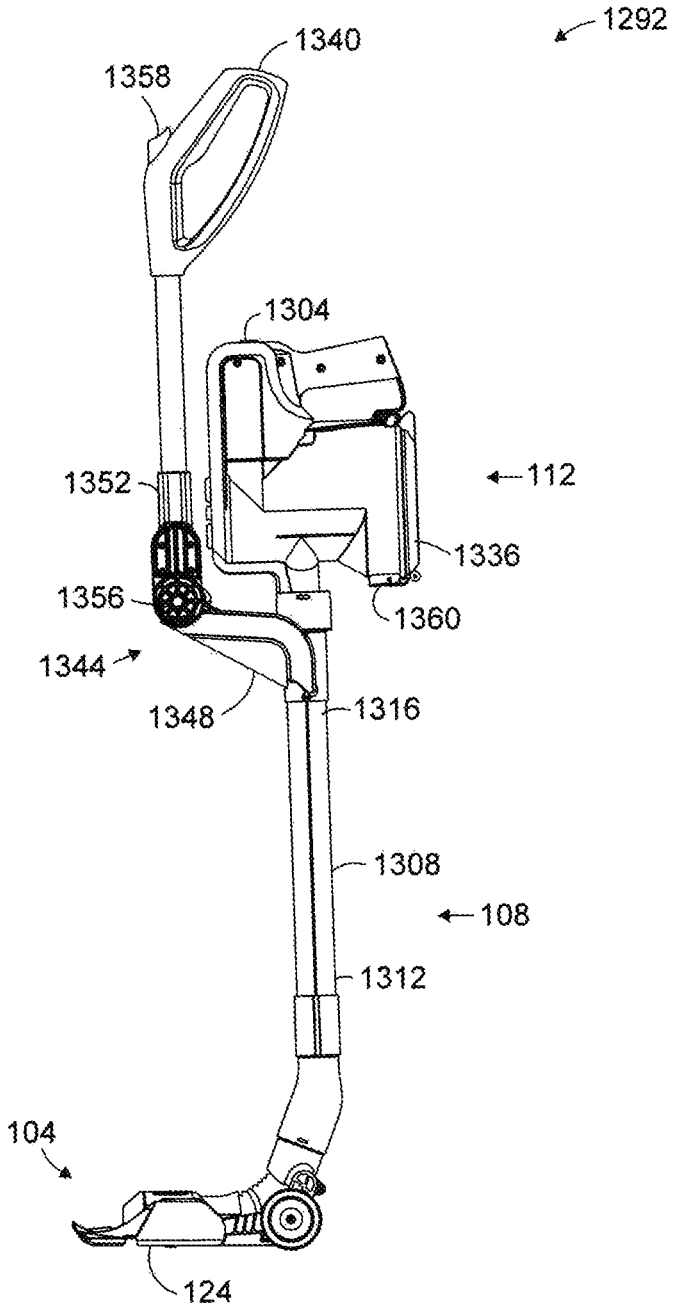
1292
1340
1358
1304
112
1352
1336
1356
1360
1344
1348
1316
1308
108
1312
104
124

FIG. 106

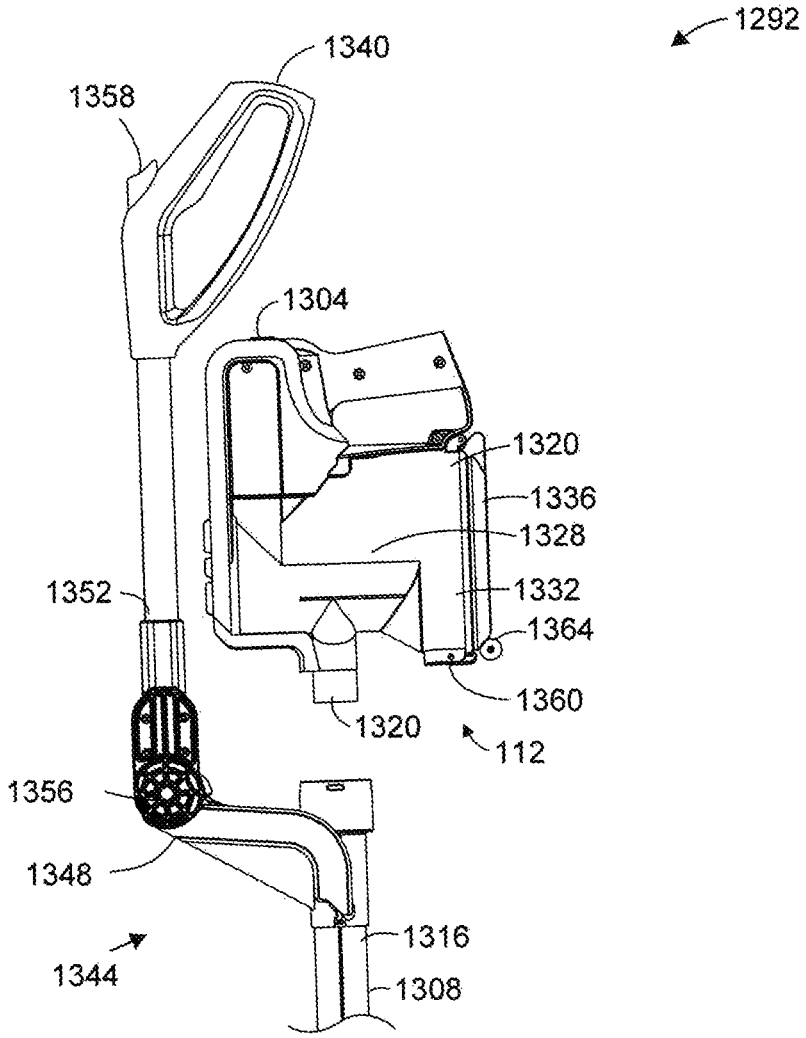
1292
1340
1358
1304
1320
1336
1328
1352
1332
1364
1360
1320
112
1356
1348
1316
1344
1308

FIG. 107

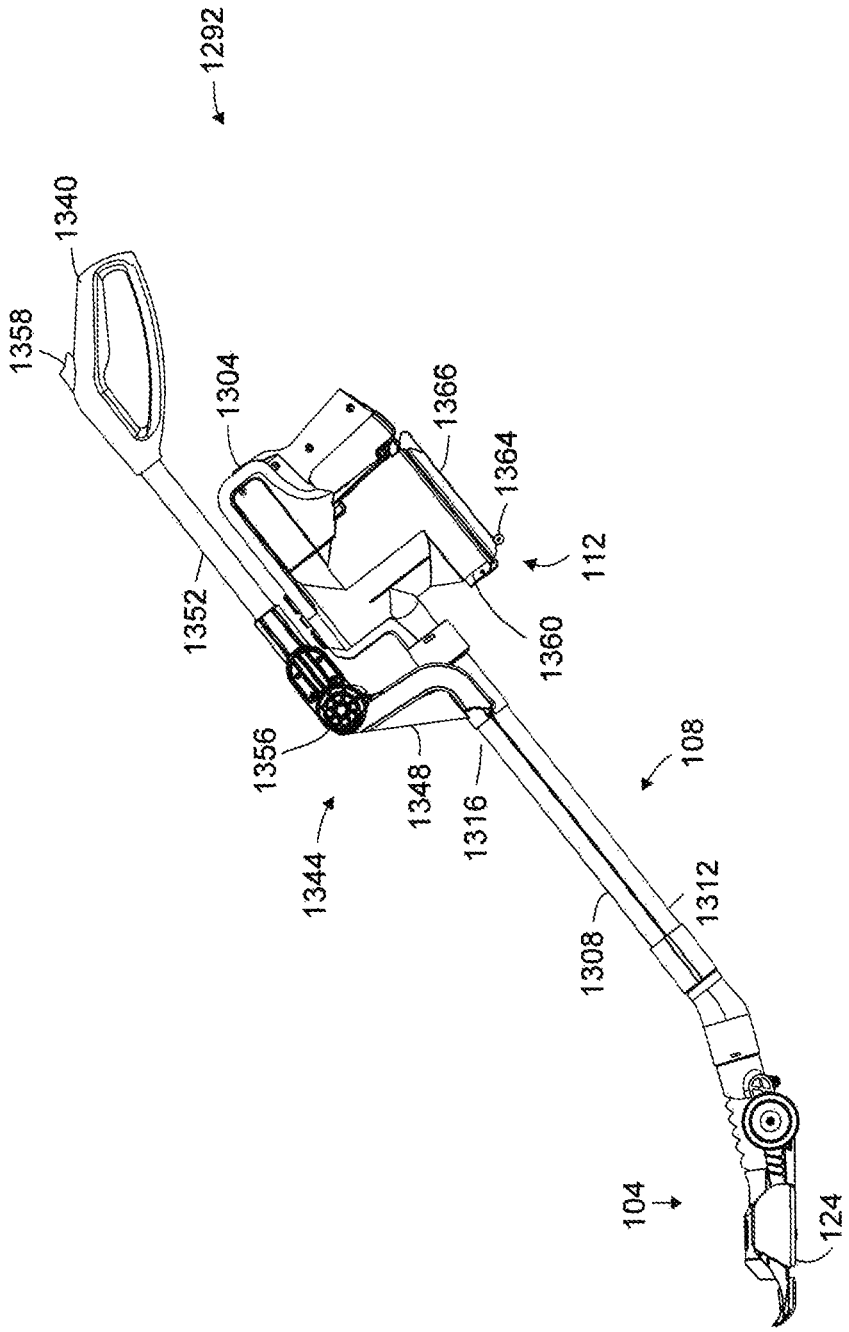
1292
1340
1358
1304
1366
1364
112
1352
1360
1356
1348
1316
108
1344
1312
1308
104
124

FIG. 108

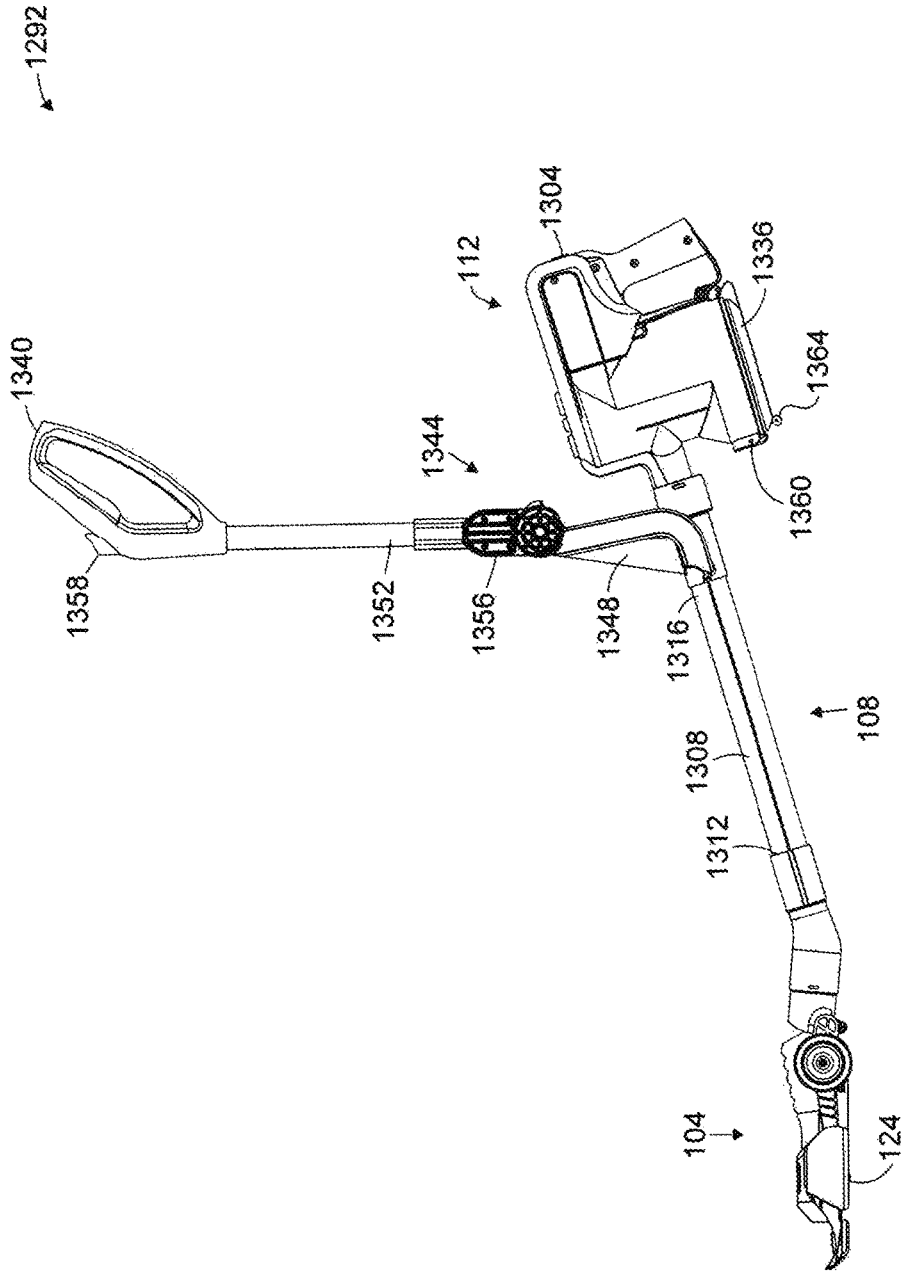
1292
1340
1358
1352
1344
1356
112
1304
1348
1316
1336
1364
1360
108
1308
1312
104
124

FIG. 109

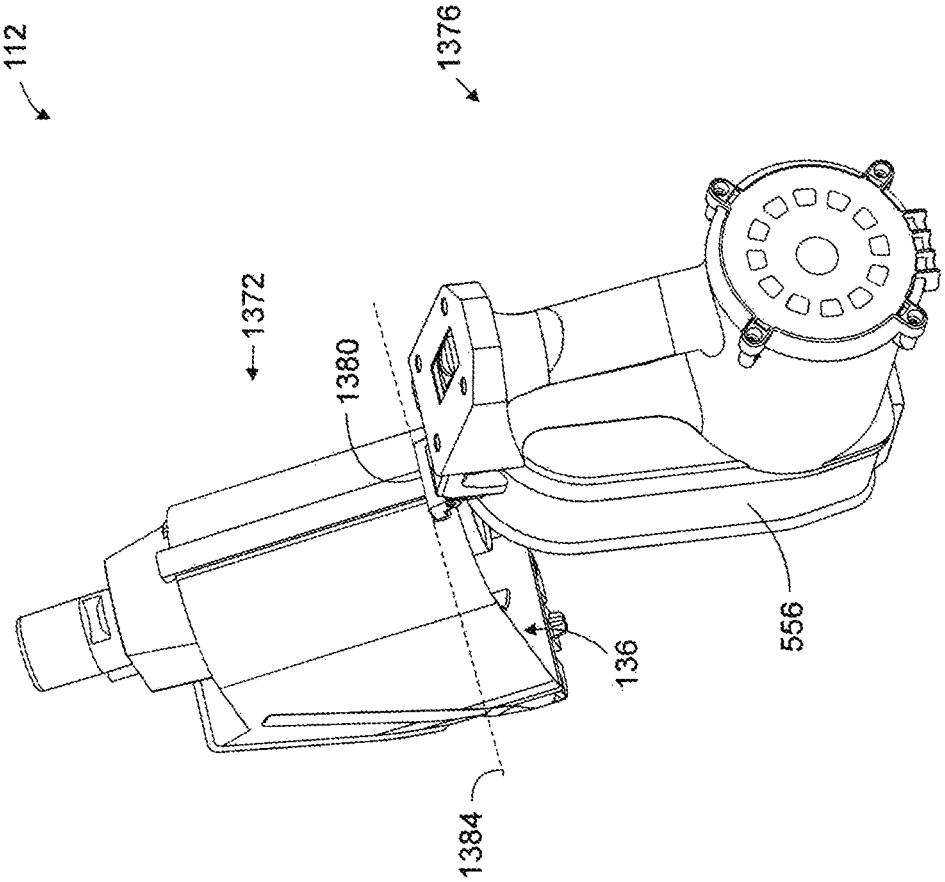

FIG. 110a

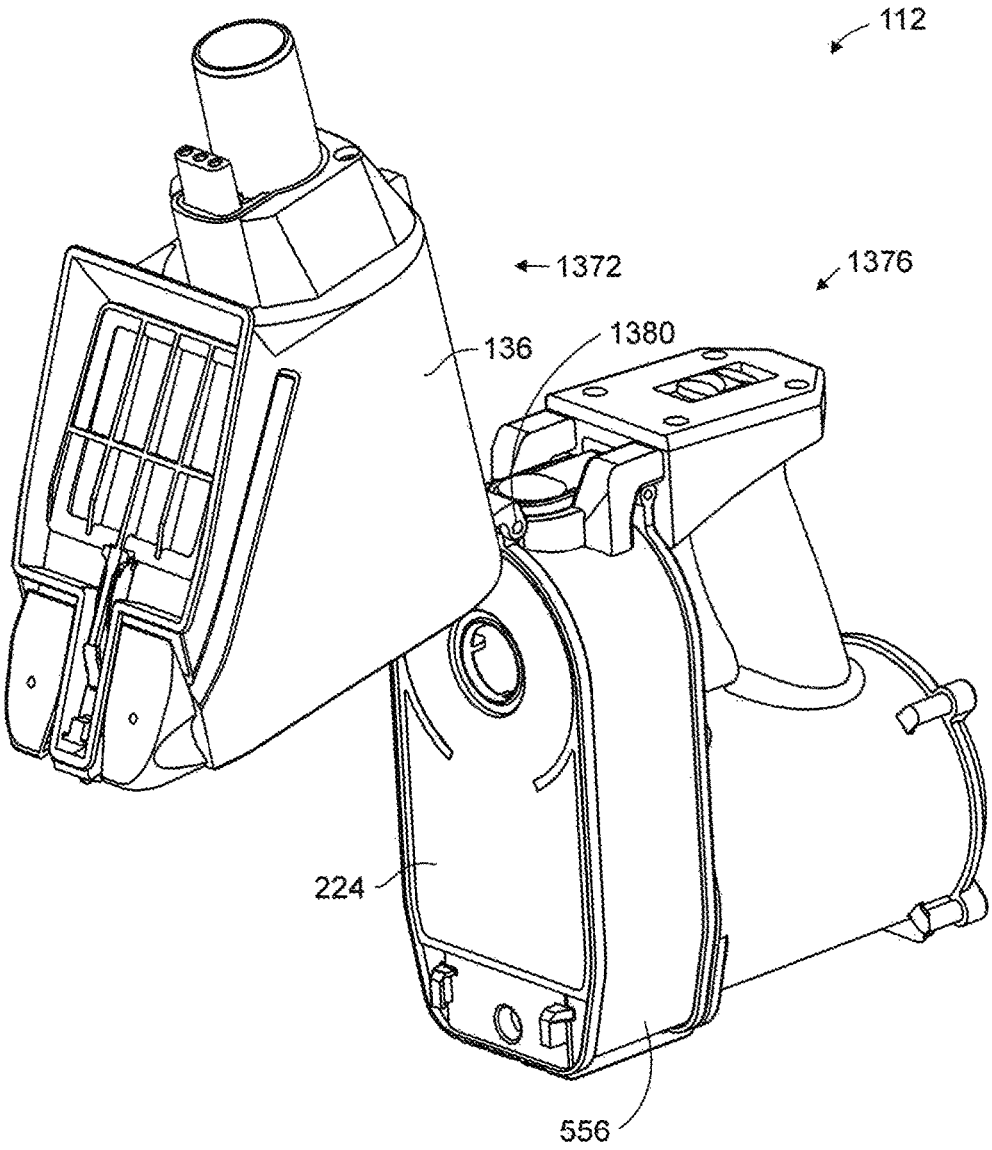

FIG. 110b

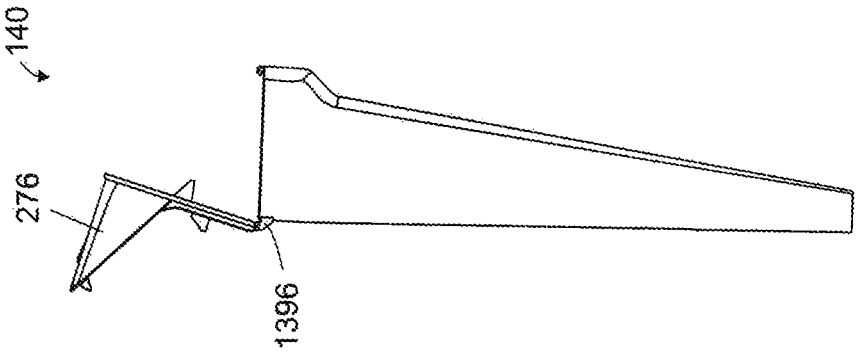

FIG. 113

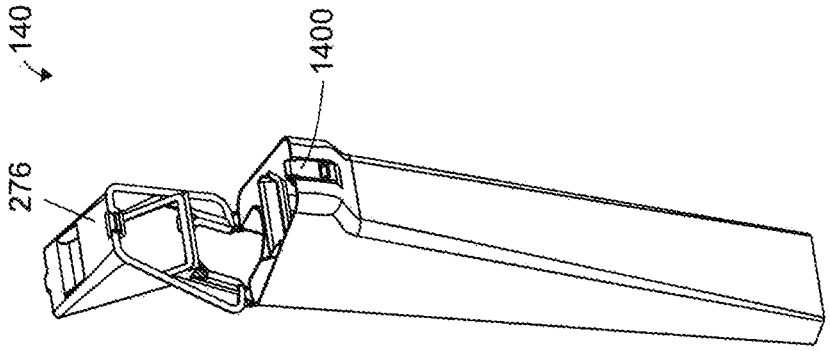

FIG. 112

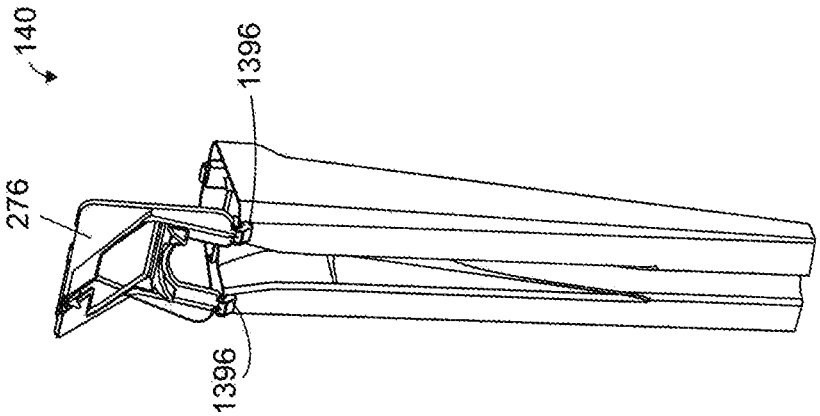

FIG. 111

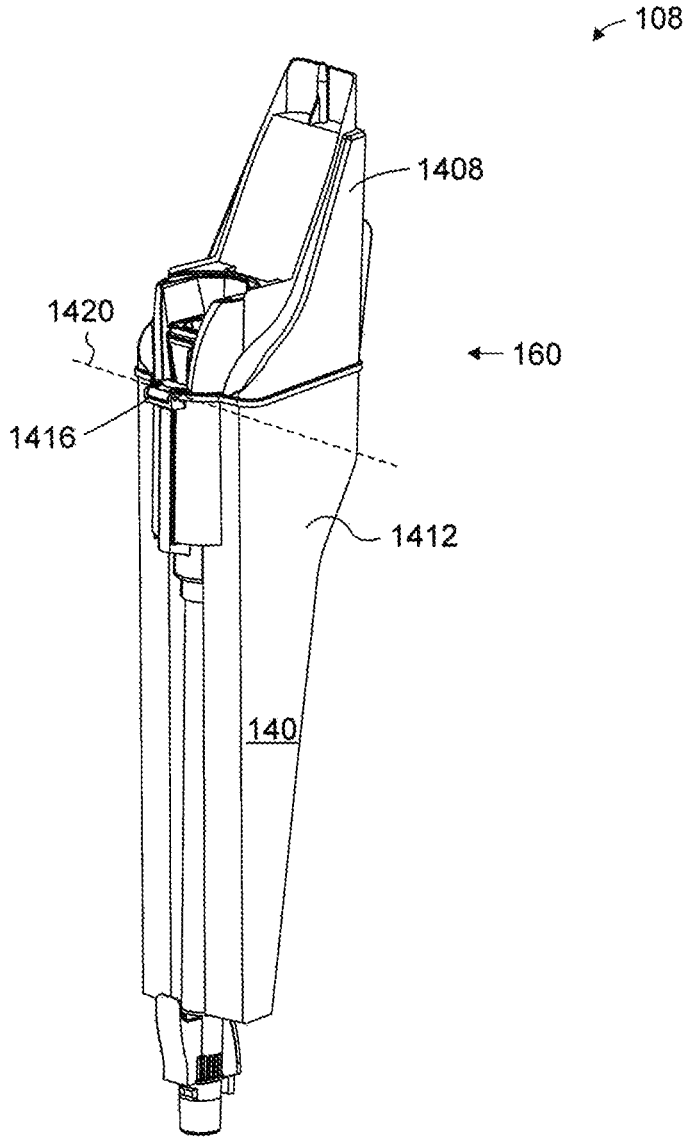

FIG. 114

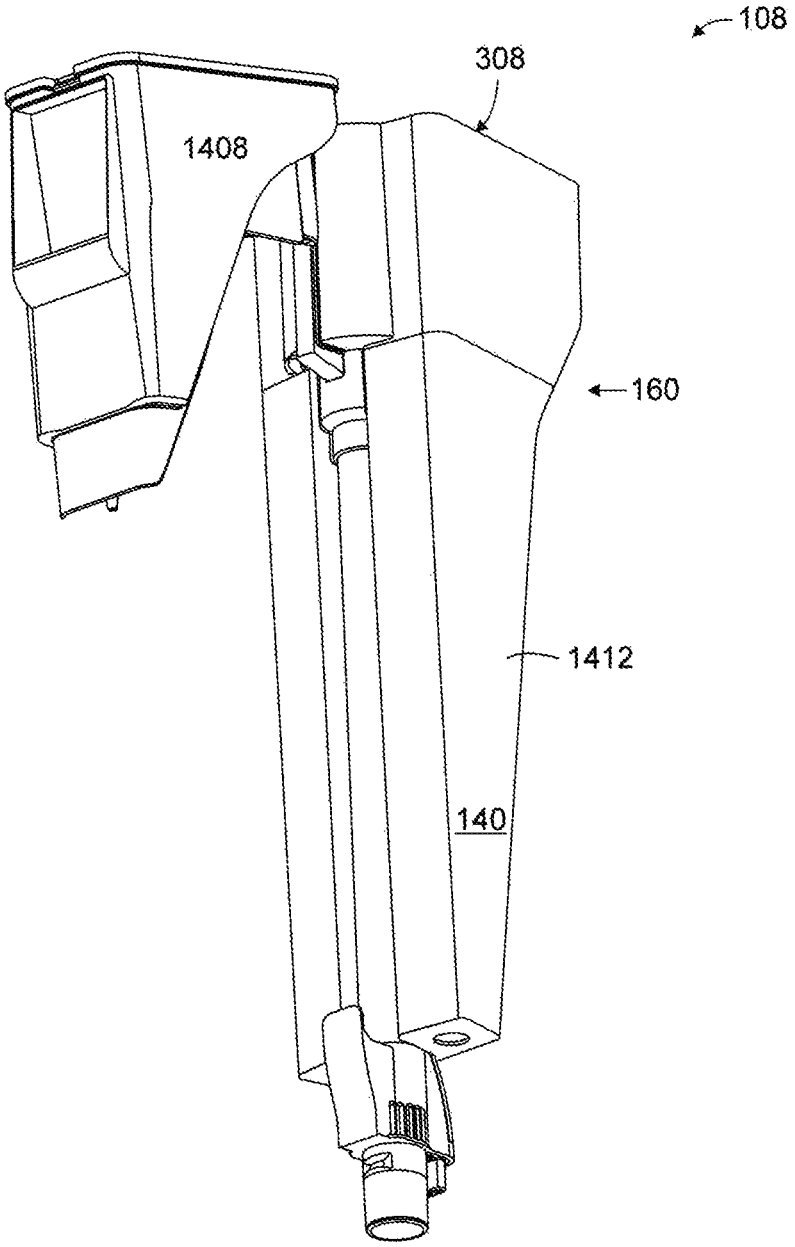

FIG. 115

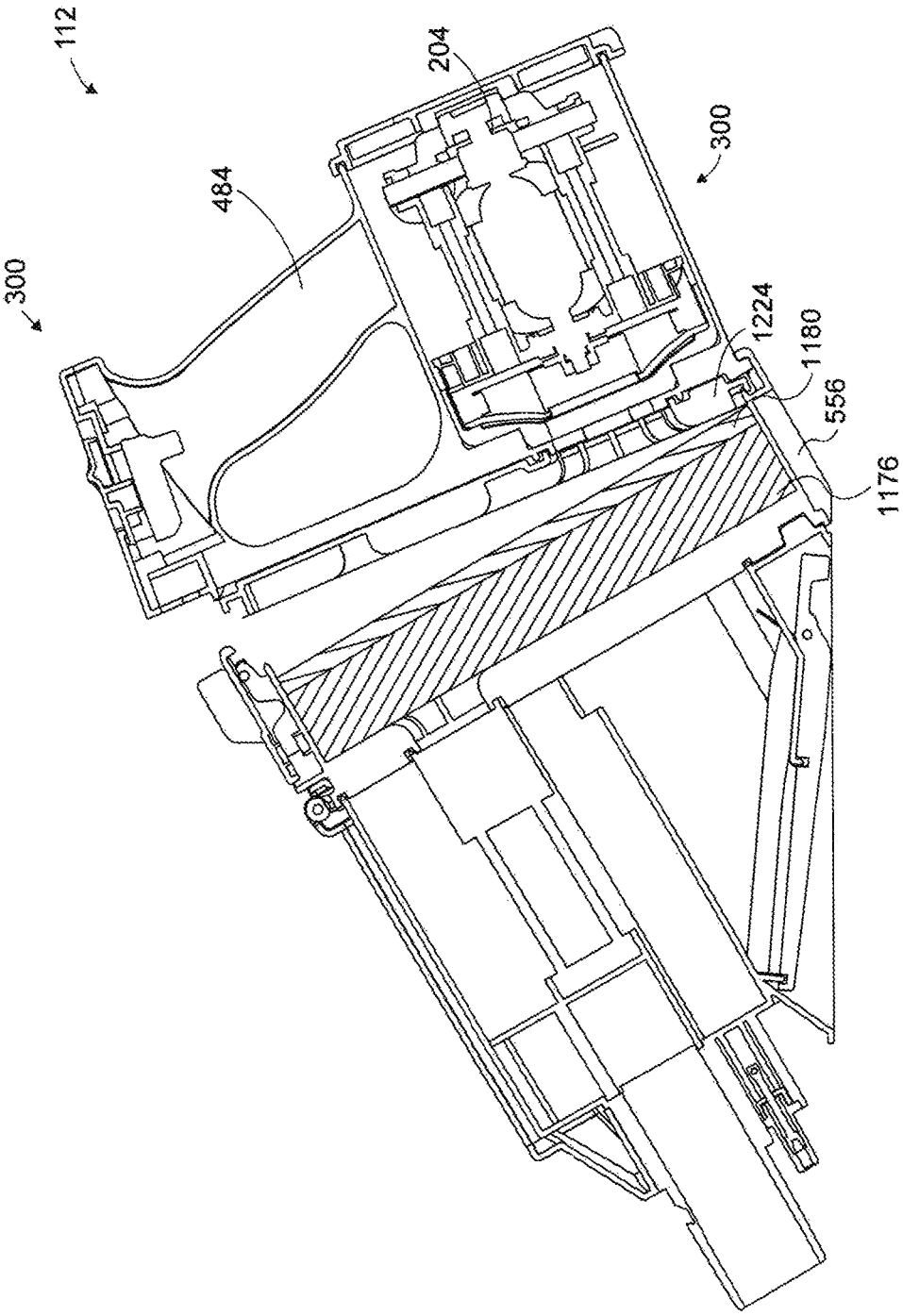

FIG. 116

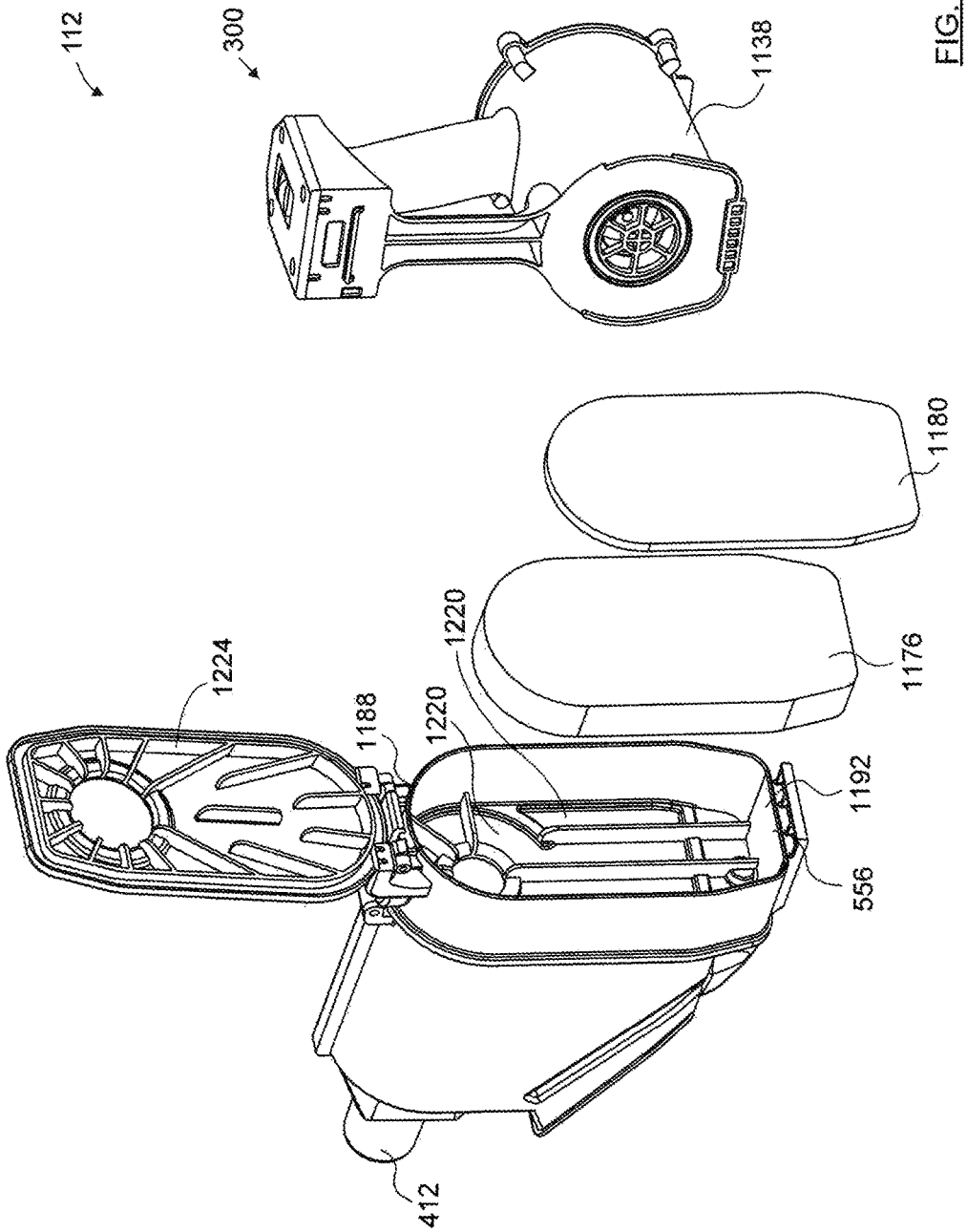

FIG. 117

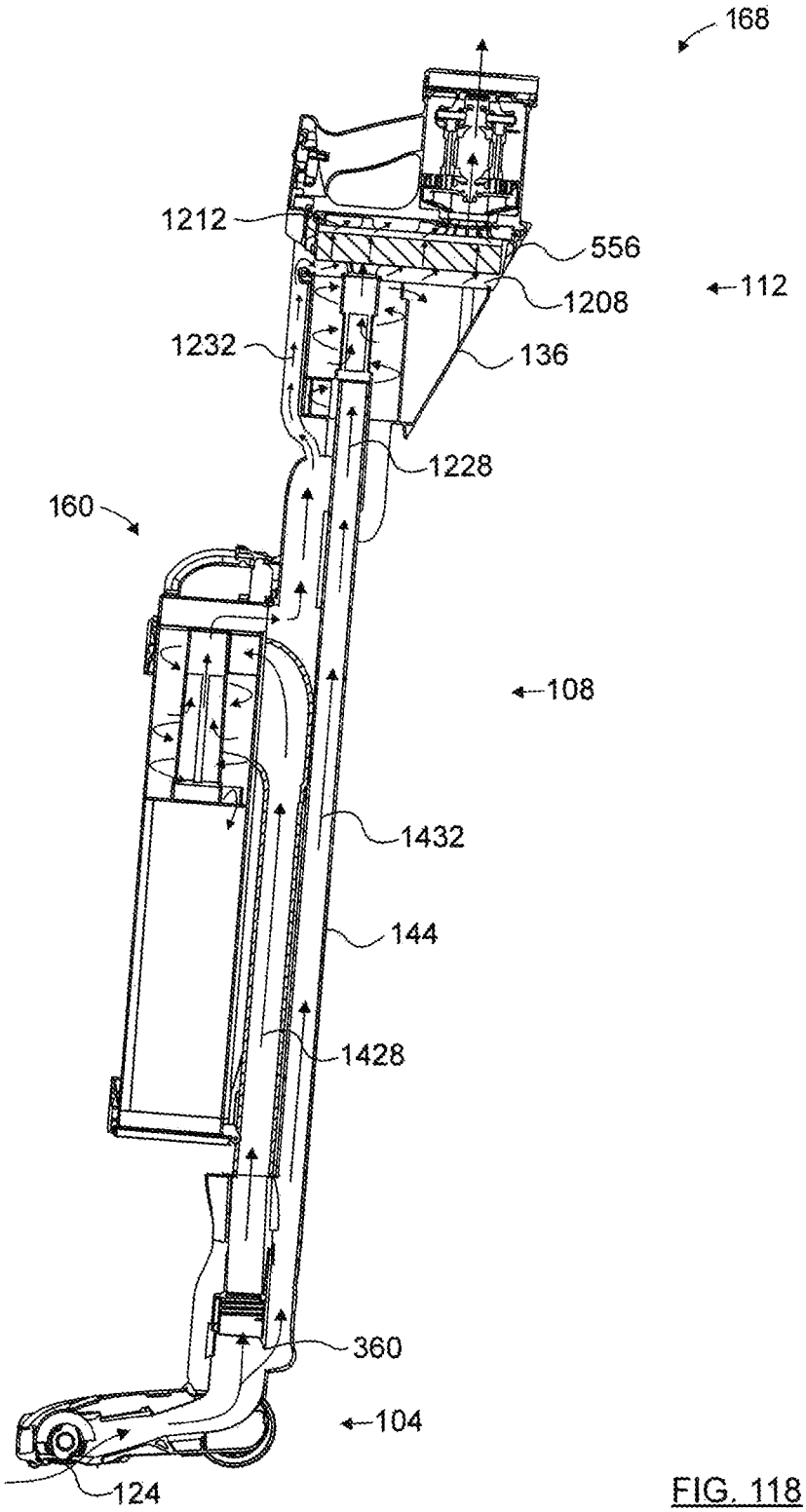
168
1212
556
112
1208
1232
136
1228
160
108
1432
144
1428
360
104
124

FIG. 118

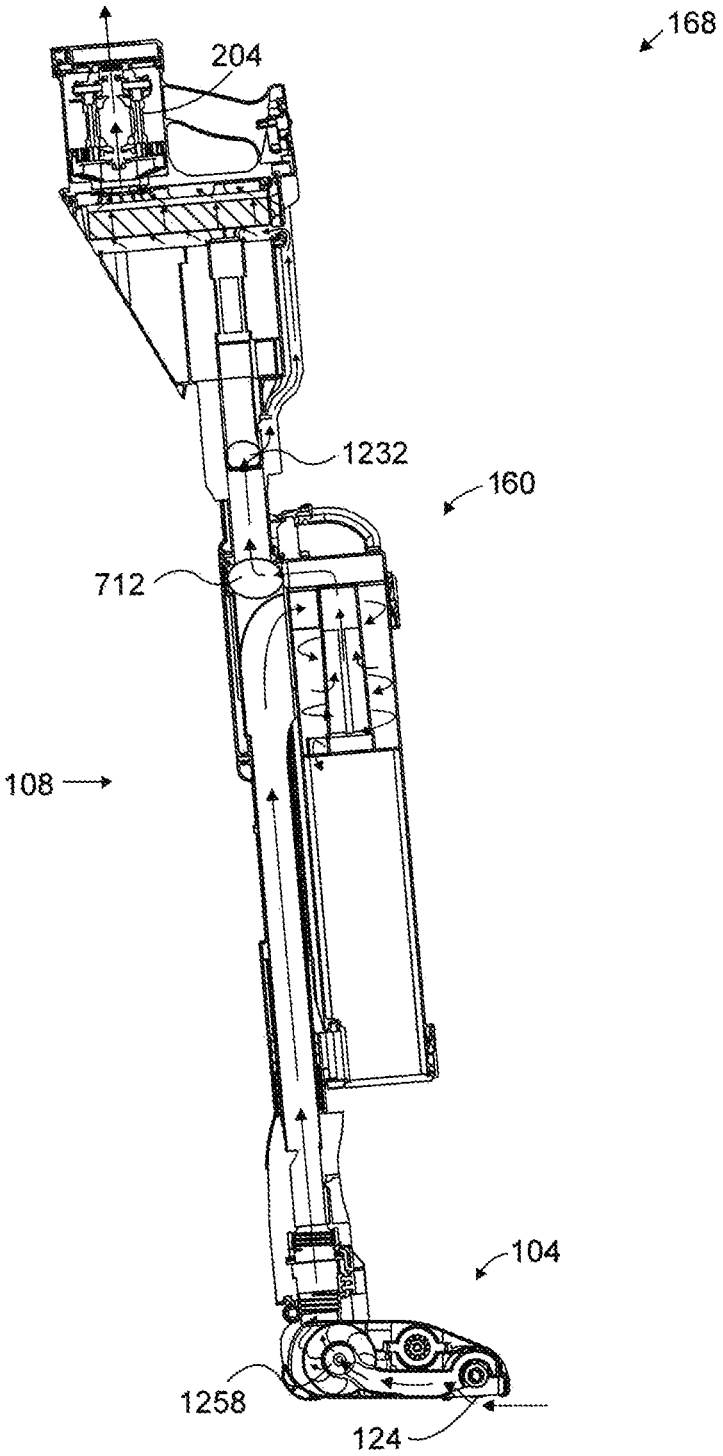

FIG. 119a

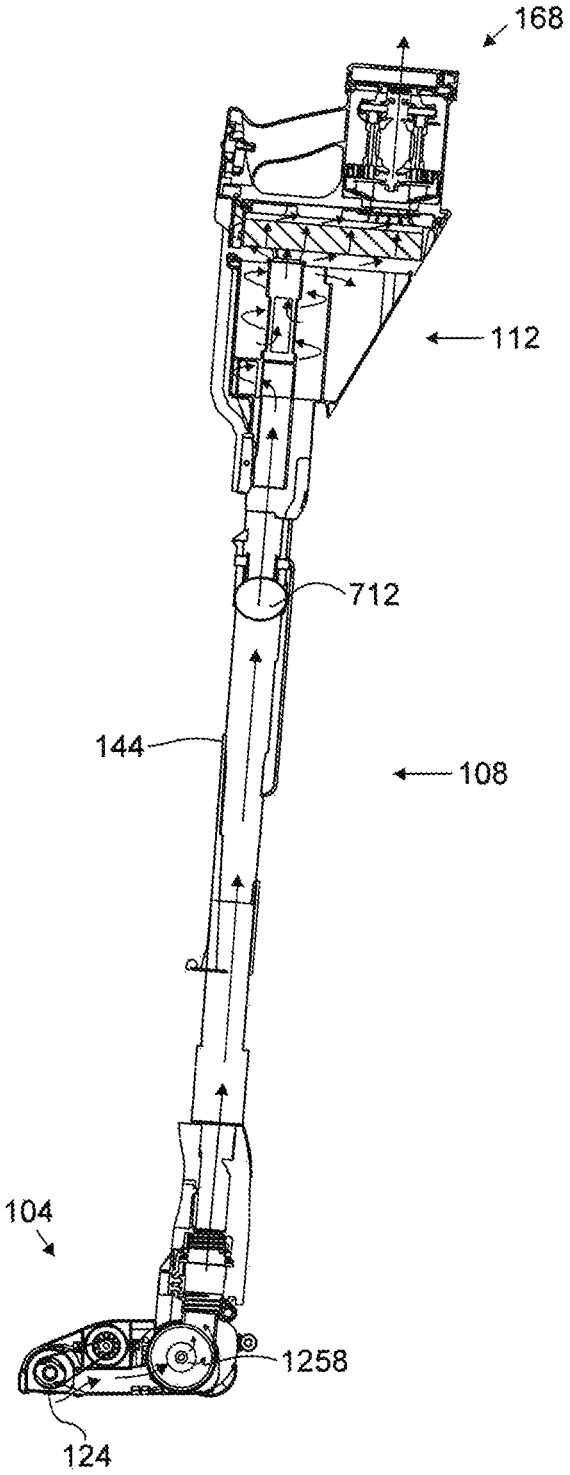

FIG. 119b

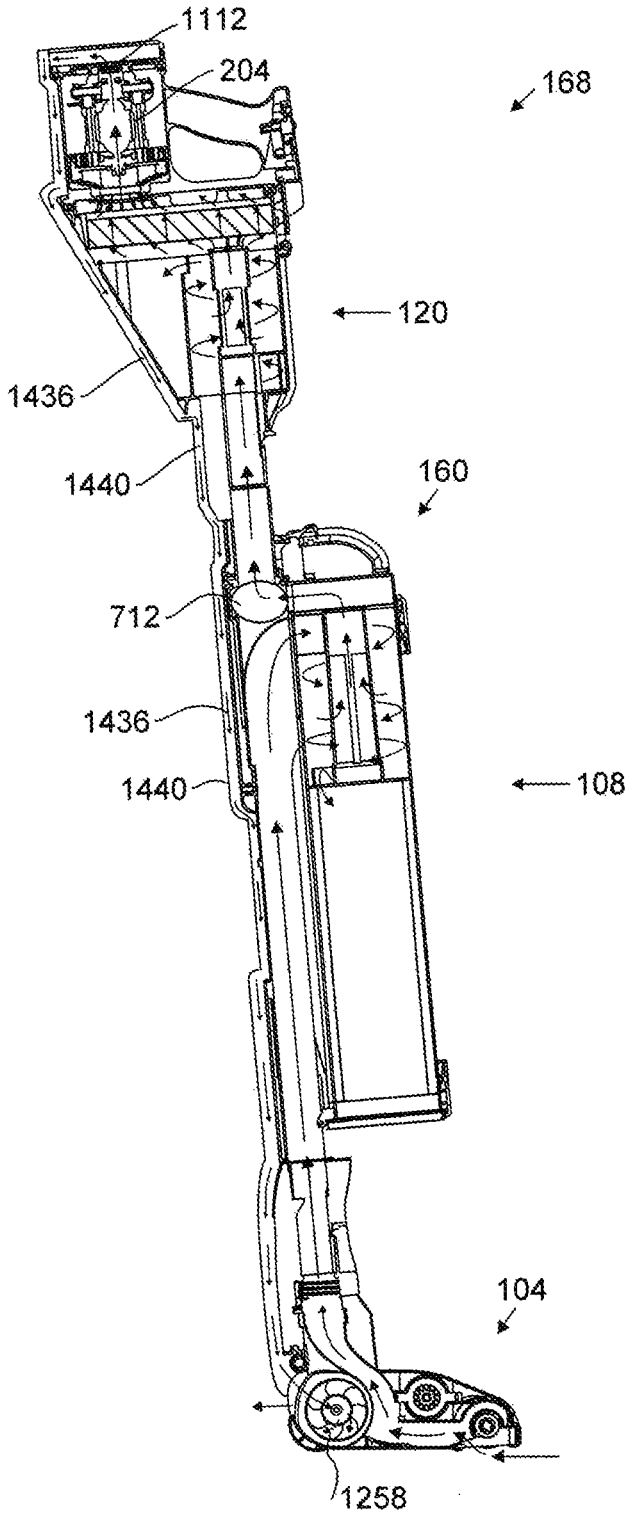

FIG. 120

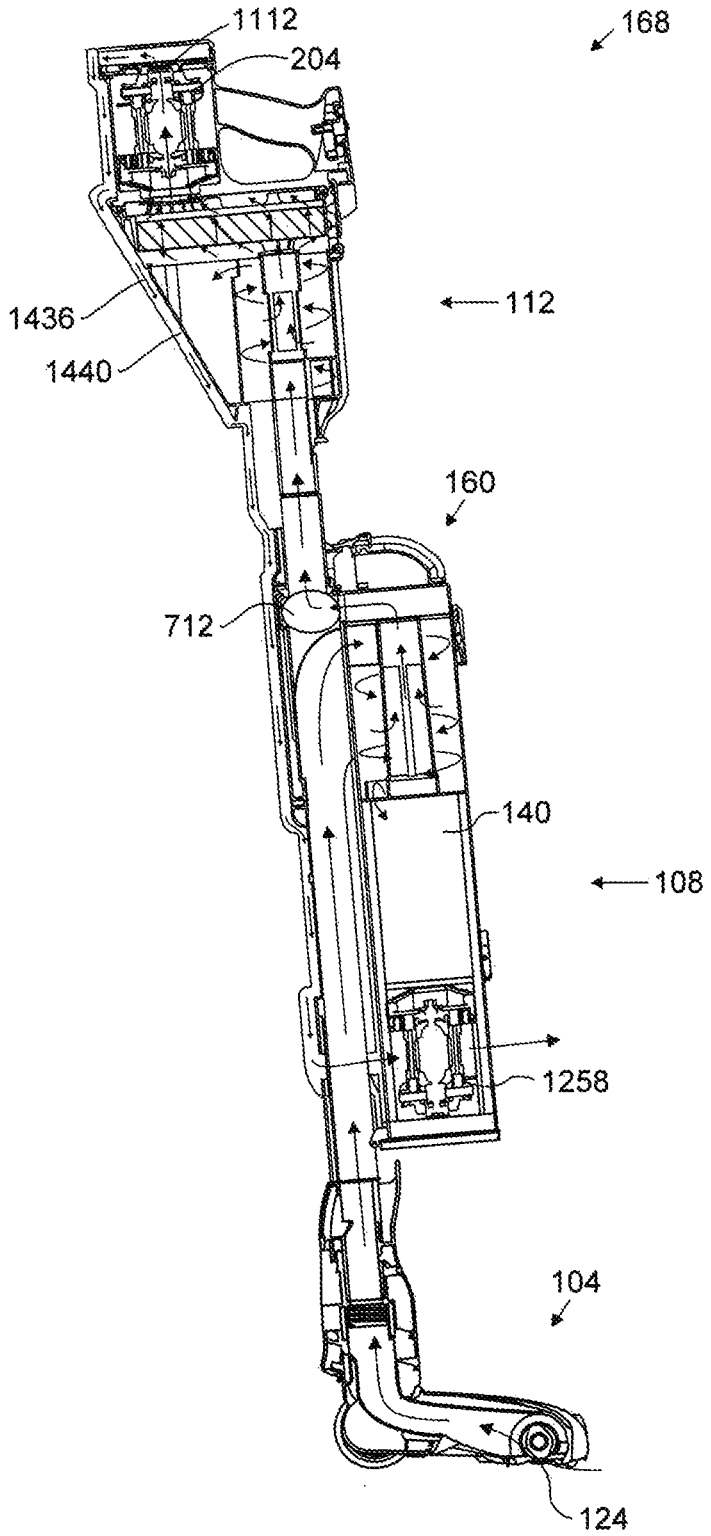

FIG. 121a

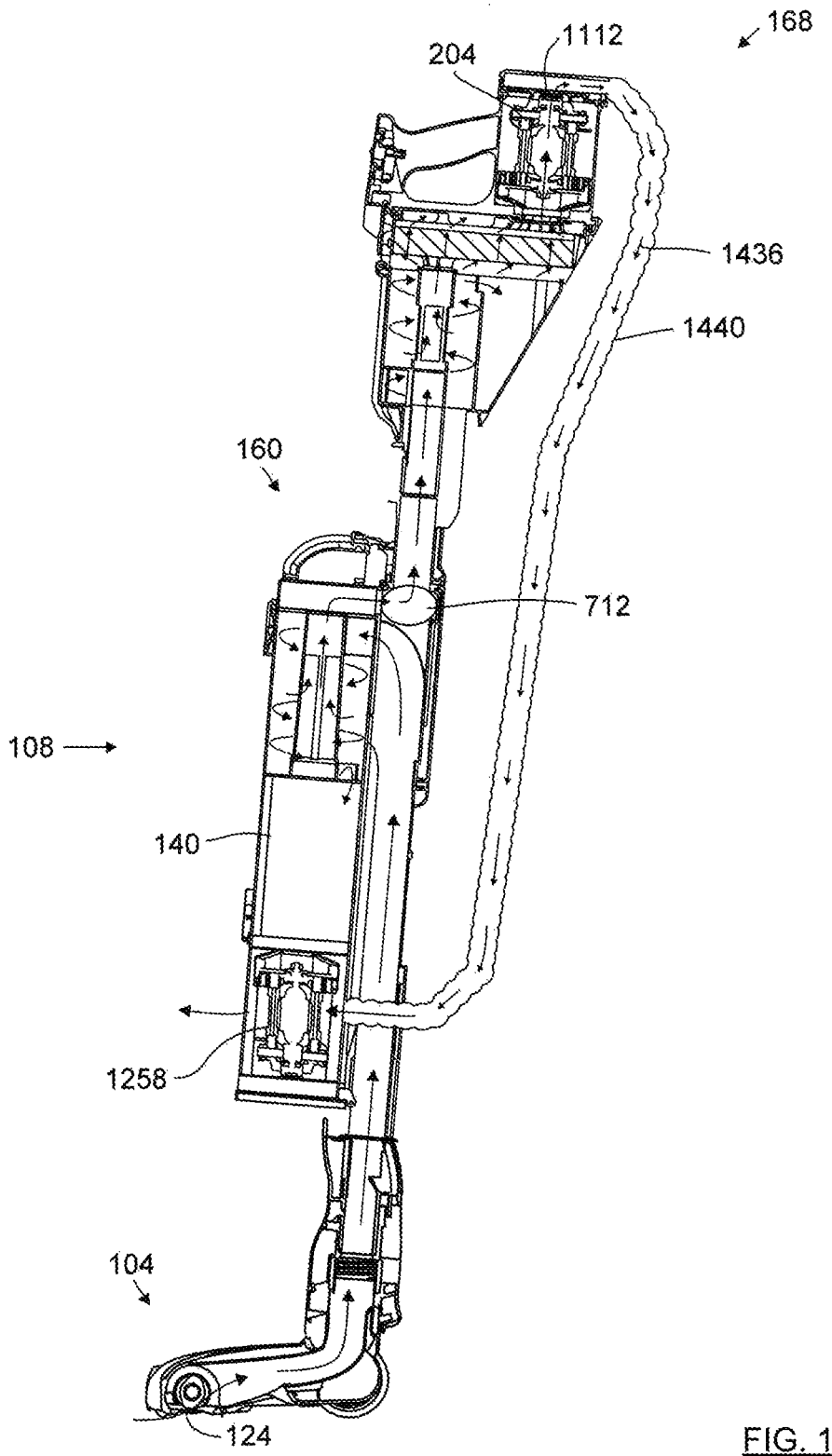

FIG. 121b

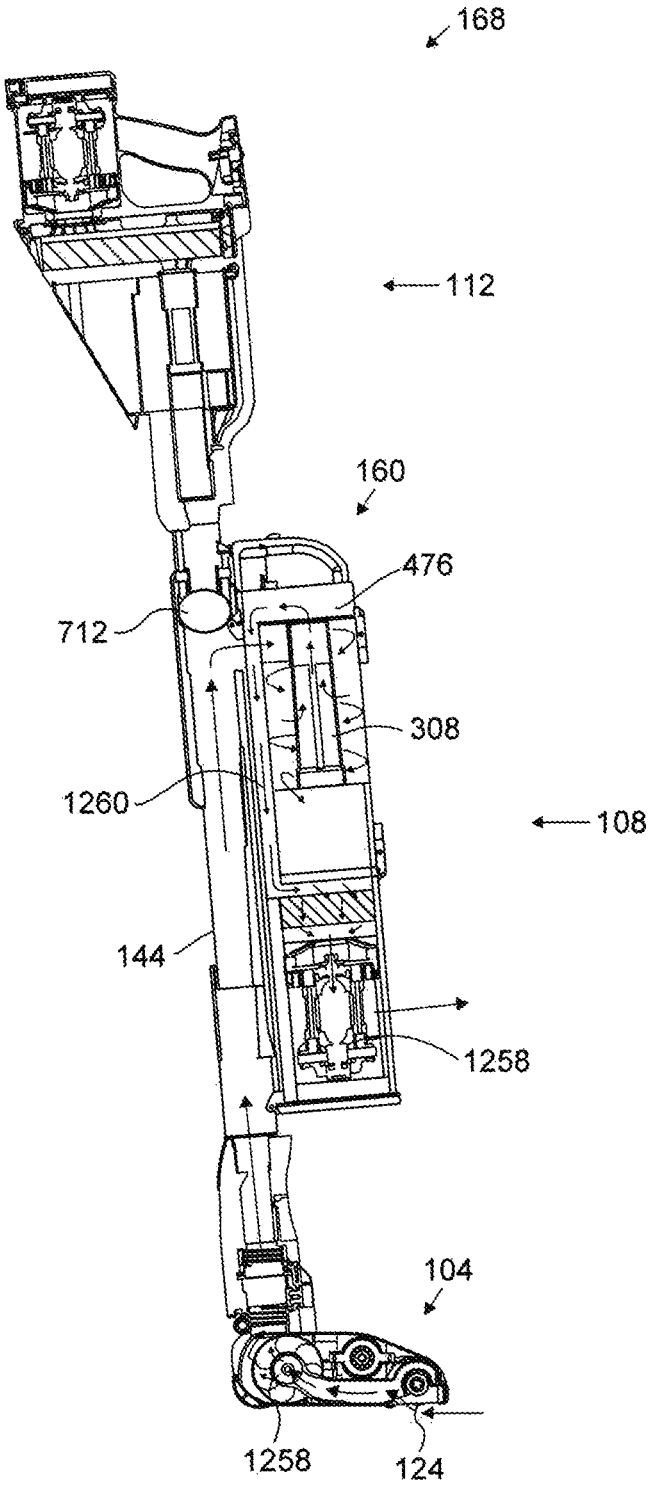

FIG. 122

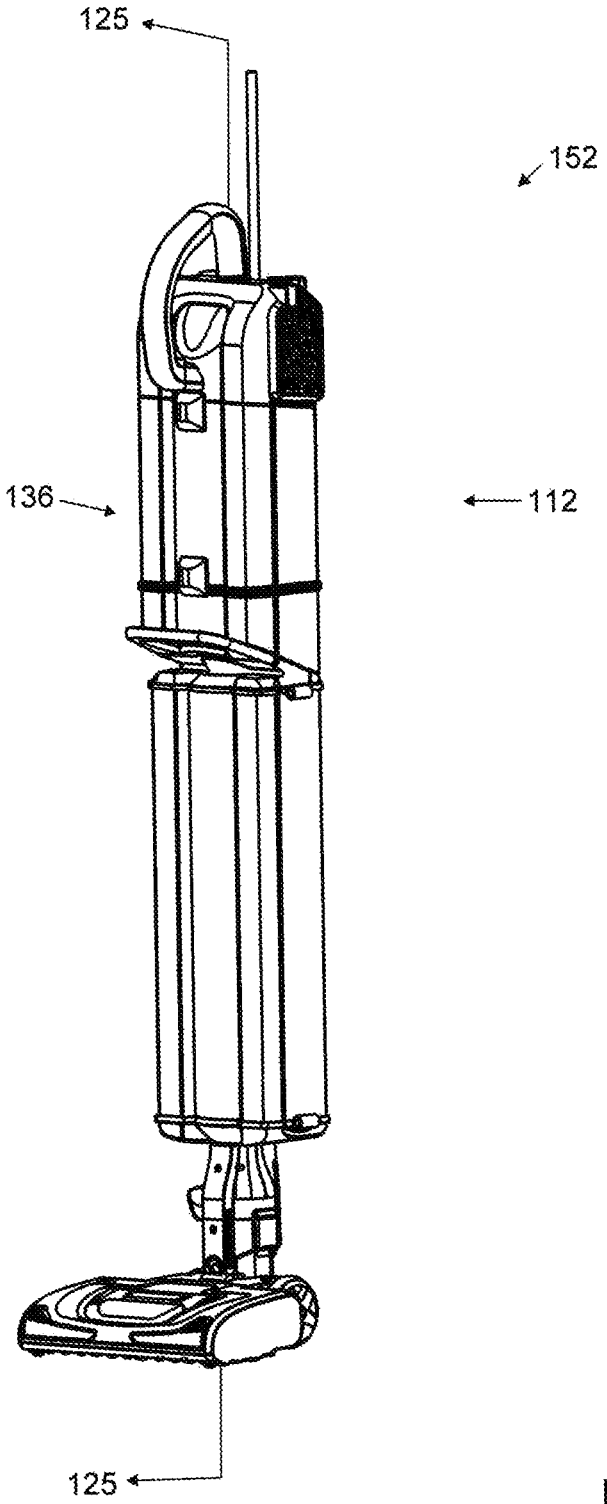

FIG. 123

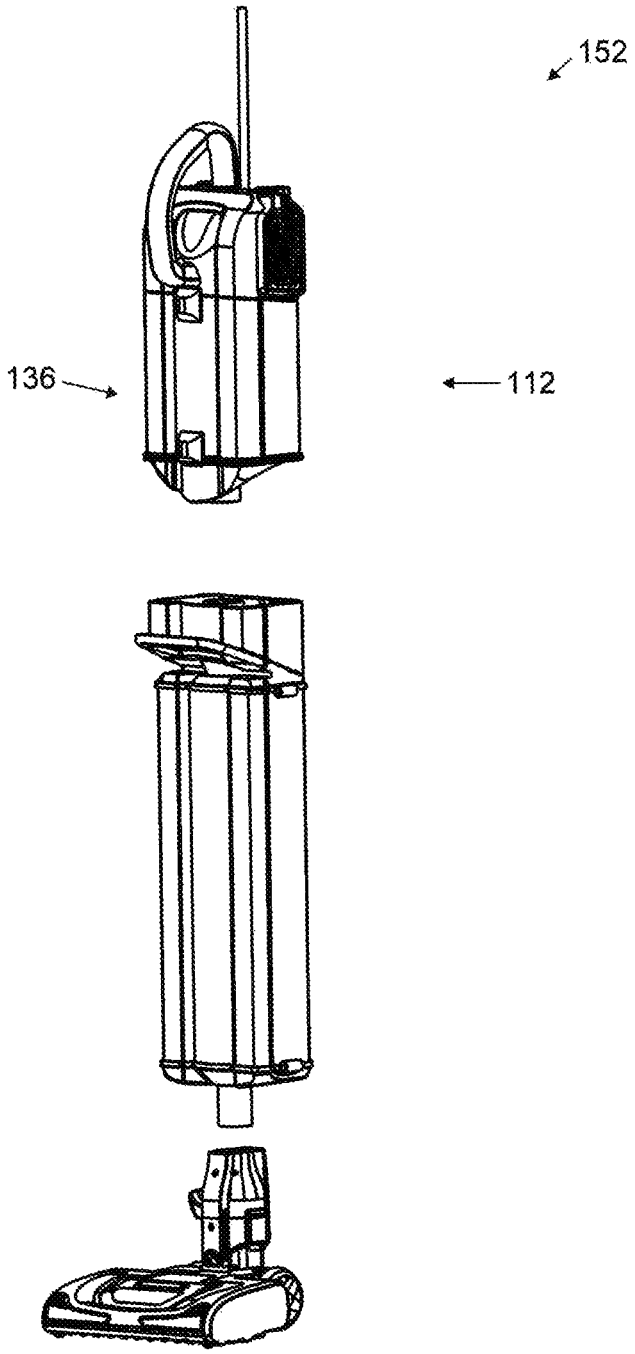

FIG. 124

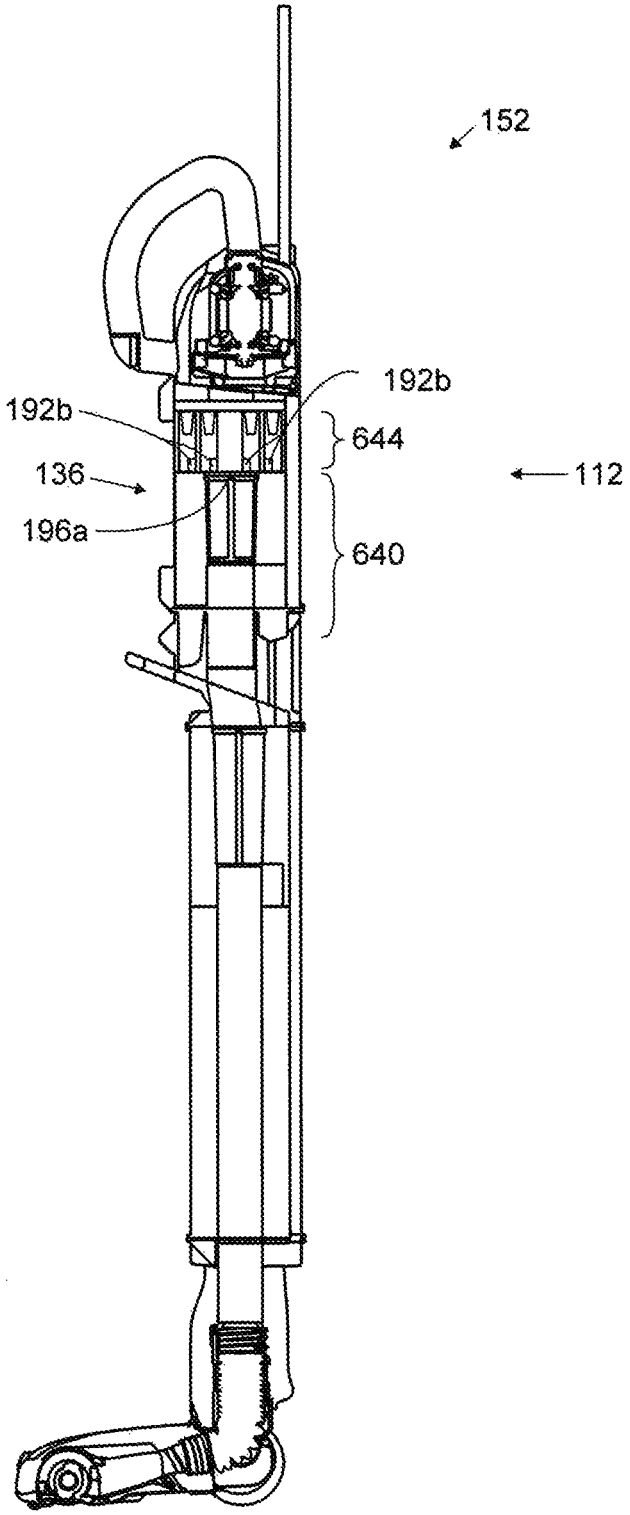

FIG. 125

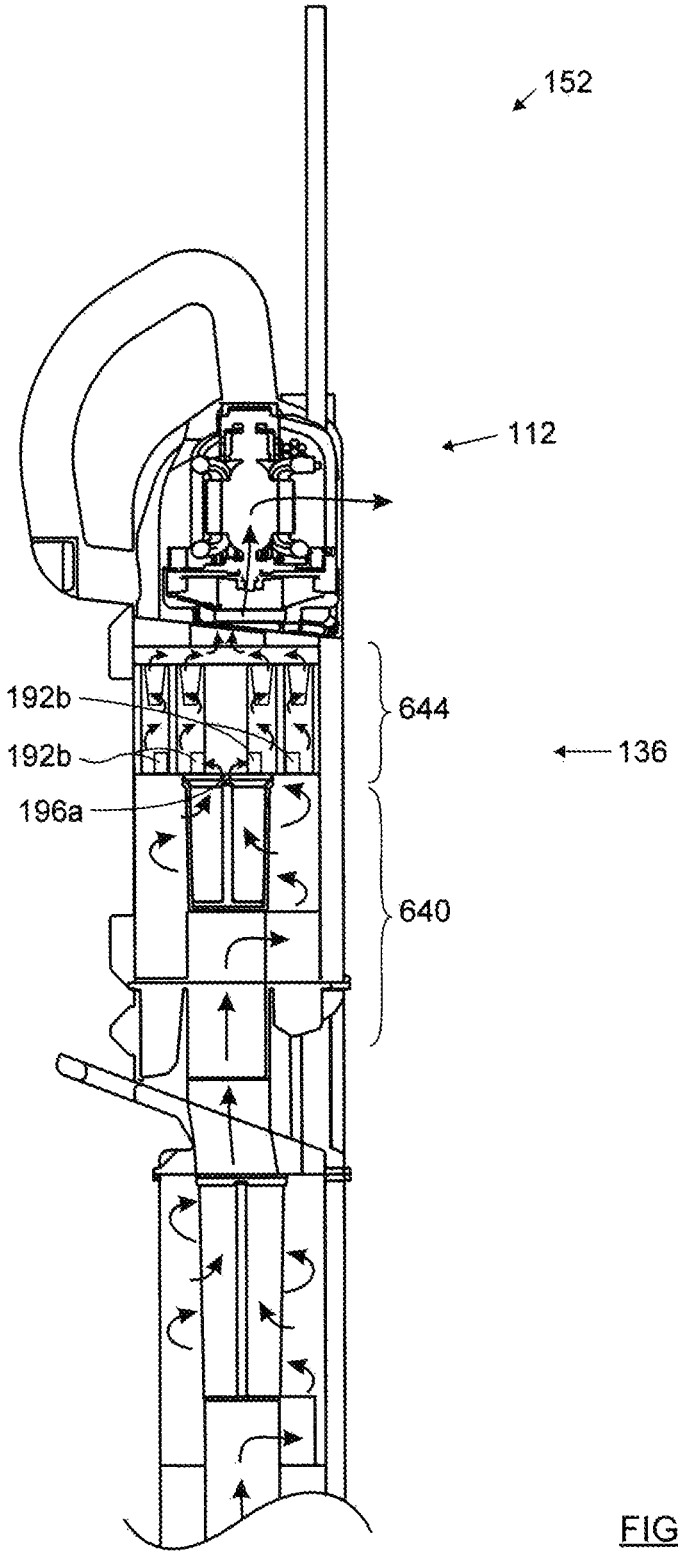

FIG. 126

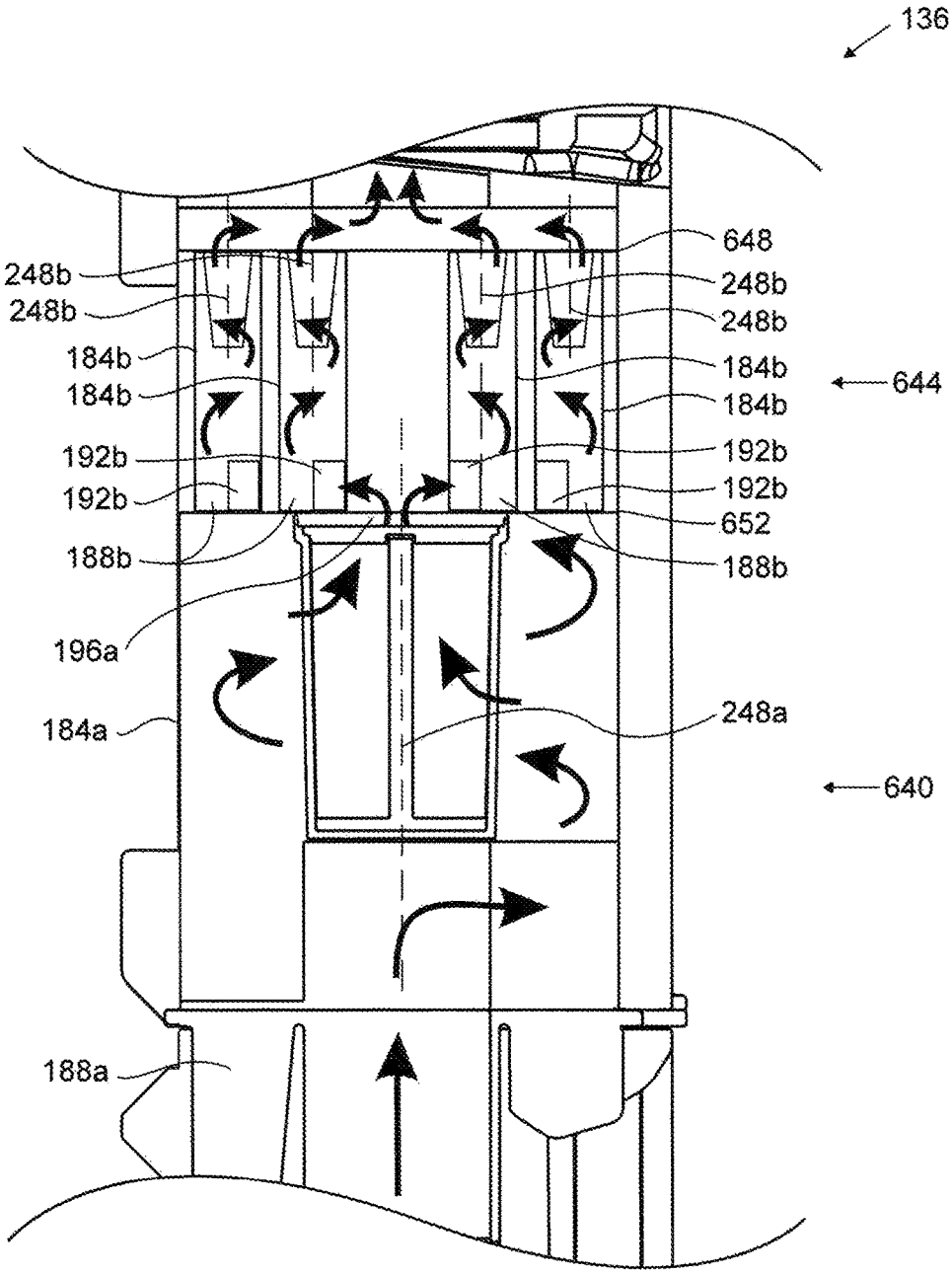
136
648
248b
248b
248b
248b
184b
184b
184b
184b
644
192b
192b
192b
192b
652
188b
188b
196a
184a
248a
640
188a

FIG. 127

SURFACE CLEANING APPARATUS

CROSS REFERENCE TO RELATED APPLICATIONS

This application is a continuation of co-pending U.S. patent application Ser. No. 14/822,211, filed Aug. 10, 2015, which claimed priority from U.S. Provisional Patent Application No. 62/093,189, filed Dec. 17, 2014 entitled SURFACE CLEANING APPARATUS, the entirety of which is hereby incorporated by reference.

FIELD

This disclosure relates to the field of surface cleaning apparatus. In some aspects, this disclosure relates to a type of stick vacuum cleaner wherein a hand vacuum cleaner is removably mounted to a drive handle and provides motive power to draw dirty air into the surface cleaning head.

INTRODUCTION

Various types of surface cleaning apparatus are known. These include upright vacuum cleaner, stick vacuum cleaners, hand vacuum cleaners and canister vacuum cleaners. Stick vacuum cleaners and hand vacuum cleaners are popular as they tend to be smaller and may be used to clean a small area or when a spill has to be cleaned up. Hand vacuum cleaners or handvacs are advantageous as they are lightweight and permit above floor cleaning and cleaning in hard to reach locations. However, they have a limited dirt collection capacity. Upright vacuum cleaners enable a user to clean a floor and may be have a pod that is removably attached for above floor cleaning. In such cases, the pod comprises, e.g., a cyclone, a dirt collection chamber and the suction motor for the upright vacuum cleaner. However, such the pods tend to be bulky since they comprise the total dirt collection capacity for the upright vacuum cleaner.

SUMMARY

In accordance with one aspect of this disclosure, a stick vacuum cleaner is provided which has a removable hand vacuum cleaner and also a supplemental bin which may function as a main dirt collection bin when the hand vacuum cleaner forms part of the stick vacuum cleaners. An advantage of this design is that the supplemental bin may provide enhanced dirt collection capacity for the stick vacuum cleaner. The supplemental bin may be removable so as to reduce the size of the stick vacuum cleaner when a smaller sized stick vacuum cleaner is desired, e.g., for cleaning in small or confined spaces.

In accordance with this aspect, there is provided a multimode surface cleaning apparatus comprising:

(a) a surface cleaning head having a dirty air inlet;

(b) an upright section moveably mounted to the surface cleaning head, the upright section moveable between a plurality of reclined floor cleaning positions;

(c) a hand vacuum cleaner removably mounted to the upright section, the hand vacuum cleaner comprising a cyclone chamber, a dirt collection region, a suction motor and a clean air outlet; and,

(d) an auxiliary dirt collection assembly removably mounted to the upright section wherein, in a first upright mode of operation, the auxiliary dirt collection assembly is removed from the upright section and the hand vacuum cleaner is in airflow communication with the dirty air inlet and, in a second upright mode of operation, the multimode surface cleaning apparatus is operable with the auxiliary dirt collection assembly mounted to the upright section.

In some embodiments, the auxiliary dirt collection assembly may comprise a dirt collection chamber and when the auxiliary dirt collection assembly is mounted to the upright section, dirt separated in the cyclone chamber is collectable in the dirt collection chamber of the auxiliary dirt collection assembly.

In some embodiments, when the auxiliary dirt collection assembly may be mounted to the upright section, the dirt collection chamber of the auxiliary dirt collection assembly is selectively connectable in communication with the dirt collection region of the hand vacuum cleaner.

In some embodiments, in the second upright mode of operation, the dirt collection region of the hand vacuum cleaner may be positioned above the dirt collection chamber of the auxiliary dirt collection assembly.

In some embodiments, the cyclone chamber may have a dirt outlet and the dirt collection region comprises a dirt collection chamber of the hand vacuum cleaner.

In some embodiments, the dirt collection chamber may have a manually openenable dumping door and the dirt collection chamber of the auxiliary dirt collection assembly may be in communication with the dirt collection chamber of the hand vacuum cleaner when the dumping door is opened.

In some embodiments, when the auxiliary dirt collection assembly is mounted to the upright section, the dirt collection chamber of the auxiliary dirt collection assembly may be automatically connected in communication with a dirt outlet of the cyclone chamber.

In some embodiments, in the second upright mode of operation, the dirt collection region of the hand vacuum cleaner may be positioned above the dirt collection chamber of the auxiliary dirt collection assembly.

In some embodiments, the dirt collection region of the hand vacuum cleaner may be in communication with the dirt outlet of the cyclone chamber and the dirt collection region may have a dumping door that is automatically opened when the auxiliary dirt collection assembly is mounted to the upright section and the dirt collection chamber of the auxiliary dirt collection assembly is in communication with the dirt collection region of the hand vacuum cleaner when the dumping door is opened.

In some embodiments, the auxiliary dirt collection assembly may comprise a cyclone chamber and a dirt collection region.

In some embodiments, in the second upright mode of operation, the cyclone chamber of the auxiliary dirt collection assembly may be connected in series with the cyclone chamber of the hand vacuum cleaner.

In some embodiments, in the second upright mode of operation, the cyclone chamber of the auxiliary dirt collection assembly may be connected in parallel with the cyclone chamber of the hand vacuum cleaner.

In some embodiments, in the second upright mode of operation, the cyclone chamber of the hand vacuum cleaner may be bypassed and air exiting the cyclone chamber of the auxiliary dirt collection assembly passes through a pre-motor filter of the hand vacuum cleaner, the suction motor and exits via the clean air outlet of the hand vacuum cleaner.

In some embodiments, the auxiliary dirt collection assembly may further comprise a pre-motor filter.

In some embodiments, in the second upright mode of operation, the cyclone chamber of the auxiliary dirt collec-

tion assembly may be connected in parallel with the cyclone chamber of the hand vacuum cleaner.

In some embodiments, in the second upright mode of operation, the cyclone chamber of the hand vacuum cleaner and a pre-motor filter of the hand vacuum cleaner may be bypassed and air exiting the cyclone chamber of the auxiliary dirt collection assembly may pass through the pre-motor filter of the auxiliary dirt collection assembly, the suction motor and exits via the clean air outlet of the hand vacuum cleaner.

In some embodiments, the auxiliary dirt collection assembly may further comprise an auxiliary dirt collection assembly suction motor.

In some embodiments, in the second upright mode of operation, at least a portion of air entering the dirty air inlet may bypass the hand vacuum cleaner and exit via an alternate clean air outlet.

In some embodiments, the alternate clean air outlet may be provided on the auxiliary dirt collection assembly.

In some embodiments, the hand vacuum cleaner may have a handle and, when the multimode surface cleaning apparatus is in the first and second upright modes of operation, the handle may be a drive handle of the multimode surface cleaning apparatus.

In some embodiments, the upright section may comprise an up flow duct and the auxiliary dirt collection assembly may be removably mounted to the up flow duct.

In some embodiments, the up flow duct may comprise a rigid extension cleaning wand and the rigid extension cleaning wand may be removable from one of the upright section and the surface cleaning head and, in a first above floor mode of operation, an above floor cleaning unit may comprise the hand vacuum cleaner and the rigid extension cleaning wand.

In some embodiments, the up flow duct may comprise a rigid tube, the hand vacuum cleaner may have a handle and, the hand vacuum cleaner may have an air inlet that is drivingly engageable with the rigid tube whereby, when the multimode surface cleaning apparatus is in the first and second upright modes of operation, the handle may be a drive handle of the multimode surface cleaning apparatus.

In some embodiments, the auxiliary dirt collection assembly may have a longitudinal axis that is generally parallel to the up flow duct.

In some embodiments, the auxiliary dirt collection assembly may comprise a cyclone chamber having a longitudinal axis that is generally parallel to the up flow duct.

In some embodiments, the hand vacuum cleaner may be provided on a rear portion of the upright section and the auxiliary dirt collection assembly may be provided on a front portion of the upright section.

In some embodiments, the upright section may comprise an up flow duct and the auxiliary dirt collection assembly may be removably mounted to a front side of the up flow duct and a portion of the hand vacuum cleaner may be positioned rearward of the up flow duct.

In some embodiments, the suction motor may be positioned rearward of the up flow duct.

In some embodiments, the upright section may comprise a lower portion and an upper portion and the upper section may be moveable forwardly relative to the lower section and the auxiliary dirt collection assembly may be removably mounted to the lower section.

In some embodiments, the upright section may comprise an up flow duct having a lower portion and an upper portion and the upper section may be moveable forwardly relative to the lower section and the auxiliary dirt collection assembly may be removably mounted to the lower section.

In some embodiments, the up flow duct may comprise a rigid tube, the hand vacuum cleaner may have a handle and, the hand vacuum cleaner may have an air inlet that is drivingly engageable with the rigid tube whereby, when the multimode surface cleaning apparatus is in the first and second upright modes of operation, the handle may be a drive handle of the multimode surface cleaning apparatus.

DRAWINGS

FIG. **1** is a front perspective view of a surface cleaning apparatus in accordance with at least one embodiment;

FIG. **2** is a rear perspective view of the apparatus of FIG. **1**;

FIG. **3** is a side elevation view of the apparatus of FIG. **1**;

FIG. **4** is a front perspective view of the apparatus of FIG. **1** with a supplemental dirt collection chamber partially removed;

FIG. **5** is a front perspective view of a surface cleaning apparatus in accordance with another embodiment;

FIG. **6** is a rear perspective view of the apparatus of FIG. **5**;

FIG. **7** is a side elevation view of the apparatus of FIG. **5** with an electrical cord bag;

FIG. **8** is a front elevation view of the apparatus of FIG. **5**;

FIG. **9** is a rear elevation view of the apparatus of FIG. **5**;

FIG. **10** is a top plan view of the apparatus of FIG. **5**;

FIG. **11** is a bottom plan view of the apparatus of FIG. **5**;

FIG. **12** is an exploded front perspective view of the apparatus of FIG. **5**;

FIG. **12***a* is an exploded front perspective view of an alternate apparatus of FIG. **5**;

FIG. **13** is a front perspective view of a surface cleaning apparatus in accordance with another embodiment;

FIG. **14** is a rear perspective view of the apparatus of FIG. **13**;

FIG. **15** is a side elevation view of the apparatus of FIG. **13**;

FIG. **16** is a front elevation view of the apparatus of FIG. **13**;

FIG. **17** is a rear elevation view of the apparatus of FIG. **13**;

FIG. **18** is a top plan view of the apparatus of FIG. **13**;

FIG. **19** is a bottom plan view of the apparatus of FIG. **13**;

FIG. **20** is a front perspective view of the apparatus of FIG. **13** with a supplemental cyclone bin assembly partially removed;

FIG. **21** is a cross-sectional view taken along line **21-21** in FIG. **1**;

FIG. **22** is a bottom perspective view of a handvac of the apparatus of FIG. **1**;

FIG. **23** is a perspective cross-sectional view of a cyclone bin assembly of the handvac of FIG. **22** transverse to the cyclone axis;

FIG. **23***a* is a top plan view of the cross-section of FIG. **23**;

FIG. **24** is a front perspective view of the supplemental dirt collection chamber of the apparatus of FIG. **1**;

FIG. **25** is a cross-sectional view taken along line **25-25** in FIG. **5**;

FIG. **26** is a cross-sectional view taken along line **26-26** in FIG. **13**;

FIG. **27** is a front perspective view of the apparatus of FIG. **1** in a lightweight upright mode;

FIG. **28** is a rear perspective view of the apparatus of FIG. **1** in the lightweight upright mode of FIG. **27**;

FIG. **29** is a side elevation view of the apparatus of FIG. **1** in the lightweight upright mode of FIG. **27**;

FIG. **30** is a cross-sectional view taken along line **30-30** in FIG. **27**;

FIG. **31** is a front perspective view of the apparatus of FIG. **1** in an above-floor cleaning mode;

FIG. **32** is a rear perspective view of the apparatus of FIG. **1** in the above-floor cleaning mode of FIG. **31**;

FIG. **33** is a side elevation view of the apparatus of FIG. **1** in the above-floor cleaning mode of FIG. **31**;

FIG. **34** is a front perspective view of the apparatus of FIG. **1** in a stair-cleaning mode;

FIG. **35** is a rear perspective view of the apparatus of FIG. **1** in the stair-cleaning mode of FIG. **34**;

FIG. **36** is a side elevation view of the apparatus of FIG. **1** in in the stair cleaning mode of FIG. **34**;

FIG. **36***a* is a front perspective view of the apparatus of FIG. **5** in an above-floor cleaning mode;

FIG. **37** is a front perspective view of the apparatus of FIG. **13** in a lightweight upright mode;

FIG. **38** is a rear perspective view of the apparatus of FIG. **13** in the lightweight upright mode of FIG. **37**;

FIG. **39** is a front elevation view of the apparatus of FIG. **13** in the lightweight upright mode of FIG. **37**;

FIG. **40** is a rear elevation view of the apparatus of FIG. **13** in the lightweight upright mode of FIG. **37**;

FIG. **41** is a side elevation view of the apparatus of FIG. **13** in the lightweight upright mode of FIG. **37**;

FIG. **42** is a top plan view of the apparatus of FIG. **13** in the lightweight upright mode of FIG. **37**;

FIG. **43** is a bottom plan view of the apparatus of FIG. **13** in the lightweight upright mode of FIG. **37**;

FIG. **44** is a cross-sectional view taken along line **44-44** in FIG. **37**;

FIG. **44***a* is a perspective view of the apparatus of FIG. **13** in an above-floor cleaning mode;

FIG. **44***b* is another perspective view of the apparatus of FIG. **13** in the above-floor cleaning mode of FIG. **44***a;*

FIG. **45** is a rear perspective view of the supplemental dirt collection chamber of FIG. **24**;

FIG. **46** is a side elevation view of the supplemental dirt collection chamber of FIG. **24**;

FIG. **47** is a front perspective view of a surface cleaning apparatus in accordance with another embodiment;

FIG. **48** is a cross-sectional view taken along line **48-48** in FIG. **47**;

FIG. **49** is a cross-section view taken along line **49-49** in FIG. **47**;

FIG. **50** is a side elevation view of the apparatus of FIG. **47**;

FIG. **51** is a front elevation view of the apparatus of FIG. **47**;

FIG. **52** is a front perspective view of an upright section of the apparatus of FIG. **13** including a diversion valve in a closed position;

FIG. **53** is a front perspective view of the upright section of FIG. **52** with a cyclone bin assembly seated on a pedal of the diversion valve;

FIG. **54** is a front perspective view of the upright section of FIG. **52** with the cyclone bin assembly connected to a wand, and the diversion valve in the open position;

FIG. **55** is a cross-sectional view taken along line **55-55** in FIG. **52**;

FIG. **56** is a cross-sectional view taken along line **56-56** in FIG. **53**;

FIG. **57** is a cross-sectional view taken along line **57-57** in FIG. **54**;

FIG. **58** is a front perspective view of an upright section of the apparatus of FIG. **13** including another diversion valve in a closed position

FIG. **59** is a front perspective view of the upright section of FIG. **58** with the cyclone bin assembly being connected to a wand, and the diversion valve in the closed position;

FIG. **60** is a front perspective view of the upright section of FIG. **58** with the cyclone bin assembly connected to the wand, and the diversion valve in the open position

FIG. **61** is a cross-sectional view taken along line **61-61** in FIG. **58**;

FIG. **62** is a cross-sectional view taken along line **62-62** in FIG. **59**;

FIG. **63** is a cross-sectional view taken along line **63-63** in FIG. **60**;

FIG. **64** is a front perspective view of an upright section of the apparatus of FIG. **13** including another diversion valve in a closed position;

FIG. **65** is a front perspective view of the upright section of FIG. **64** with the diversion valve in a partially opened position;

FIG. **66** is a front perspective view of the upright section of FIG. **64** mounted to the wand with the diversion valve in an open position;

FIG. **67** is a cross-sectional view of the upright section of FIG. **64**;

FIG. **68** is another cross-sectional view of the upright section of FIG. **64**;

FIG. **69** is an enlarged view of a portion of FIG. **68**;

FIG. **70** is a cross-sectional view taken along line **70-70** in FIG. **65**;

FIG. **71** is a cross-sectional view taken along line **71-71** in FIG. **66**;

FIG. **72** is a front perspective view of an upright section of the apparatus of FIG. **13** with another diversion valve in a closed position;

FIG. **73** is a front perspective view of the upright section of FIG. **72** being connected to the wand and with the diversion valve in a closed position;

FIG. **74** is a front perspective view of the upright section of FIG. **72** connected to the wand and with the diversion valve in an open position;

FIG. **75** is a cross-section view taken along line **75-75** in FIG. **72**;

FIG. **76** is a cross-section view taken along line **76-76** in FIG. **73**;

FIG. **77** is a cross-section view taken along line **77-77** in FIG. **74**;

FIG. **78** is a side elevation view of the handvac of the apparatus of FIG. **1**;

FIG. **79** is a side elevation view of the handvac of the apparatus of FIG. **5**;

FIG. **80** is a side elevation view of the apparatus of FIG. **5** in an upright storage position with a surface cleaning head having rearwardly deployed wheels;

FIG. **81** is a side elevation view of the apparatus of FIG. **80** in a reclined in-use position with the rear wheels of the surface cleaning head retracted;

FIG. **82** is a front perspective view of the apparatus of FIG. **13** with a cyclone bin assembly in accordance with at least one embodiment;

FIG. **83** is a rear perspective view of the cyclone bin assembly of FIG. **82** in a closed position;

FIG. **84** is a side elevation view of the cyclone bin assembly of FIG. **82** in a closed position;

FIG. **85** is a front elevation view of the cyclone bin assembly of FIG. **82** in a closed position;

FIG. **86** is a front elevation view of the cyclone bin assembly of FIG. **82** with a cyclone chamber portion in an open position;

FIG. **87** is a front elevation view of the cyclone bin assembly of FIG. **82** with the cyclone chamber portion and a dirt collection portion in open positions;

FIG. **88** is a top perspective view of the cyclone bin assembly of FIG. **82** with the cyclone chamber portion and the dirt collection portion in open positions;

FIG. **89** is a front perspective view of the cyclone bin assembly of the apparatus of FIG. **13**;

FIG. **90** is a rear perspective view of the cyclone bin assembly of FIG. **89**;

FIG. **91** is a front elevation view of the cyclone bin assembly of FIG. **89**;

FIG. **92** is a rear elevation view of the cyclone bin assembly of FIG. **89**;

FIG. **93** is a side elevation view of the cyclone bin assembly of FIG. **89**;

FIG. **94** is a top plan view of the cyclone bin assembly of FIG. **89**;

FIG. **95** is a bottom plan view of the cyclone bin assembly of FIG. **89**;

FIG. **95***b* is a front perspective view of the cyclone bin assembly of FIG. **89** with a bottom portion in an open position;

FIG. **95***c* is a front perspective view of the cyclone bin assembly of FIG. **89** with top and bottom portions in open positions;

FIG. **96** is a cross-sectional view taken along line **96-96** in FIG. **22**;

FIG. **97***a* is a bottom perspective view of the handvac of the apparatus of FIG. **1**,

FIG. **97***b* is a partial cross-sectional view taken along line **97***b*-**97***b* of FIG. **97***a;*

FIG. **98***a* is a bottom perspective view of the handvac of the apparatus of FIG. **1** with an open door;

FIG. **98***b* a partial cross-sectional view taken along line **98***b*-**98***b* of FIG. **98***a;*

FIG. **99** is a partial cross-sectional view of a surface cleaning apparatus having a handvac disconnected from the upright section, and a bypass valve in a first closed position;

FIG. **100** is a cross-sectional view of the surface cleaning apparatus of FIG. **99** having a handvac connected to the upright section and the bypass valve in the first closed position;

FIG. **101** is a cross-sectional view of the surface cleaning apparatus of FIG. **99** having the handvac connected to the upright section and a supplementary cyclone bin assembly, and the bypass valve in a second open position;

FIG. **102** is a cross-sectional view of a surface cleaning apparatus having a having a bypass airflow path and a pre-motor filter in a supplemental cyclone bin assembly;

FIG. **103** is a cross-sectional view of a surface cleaning apparatus having a clean air suction motor in a surface cleaning head;

FIG. **104***a* is a cross-sectional view of a surface cleaning apparatus having a having a clean air suction motor in a supplemental cyclone bin assembly;

FIG. **104***b* is a cross-sectional view of another surface cleaning apparatus having a clean air suction motor in a supplemental cyclone bin assembly;

FIG. **105***a* is a perspective view of a surface cleaning apparatus having a supplemental cyclone bin assembly disconnected from an upright section;

FIG. **105***b* is a perspective view of a surface cleaning apparatus having a cyclone chamber and dirt collection chamber disconnected from an upright section;

FIG. **106** is a side elevation view a surface cleaning apparatus in accordance with another embodiment;

FIG. **107** is a partial side elevation view of the apparatus of FIG. **106** with a handvac disconnected from an upright section;

FIG. **108** is a side elevation view of the apparatus of FIG. **106** in a reclined in-use position with an arm assembly in a first position;

FIG. **109** is a side elevation view of the apparatus of FIG. **106** in a steeply reclined in-use position with the arm assembly in a second position;

FIG. **110***a* is a rear perspective view of the handvac of the apparatus of FIG. **1** in an open position;

FIG. **110***b* is a front perspective view of the handvac of FIG. **110***a* in the open position;

FIG. **111** is a front perspective view of the dirt collection chamber of the apparatus of FIG. **1** in an open position;

FIG. **112** is a rear perspective view of the dirt collection chamber of FIG. **111** in the open position;

FIG. **113** is a side elevation view of the dirt collection chamber of FIG. **111** in the open position;

FIG. **114** is a front perspective view of the upright section of the apparatus of FIG. **5** with a cyclone bin assembly in a closed position;

FIG. **115** is a front perspective view of the upright section of FIG. **114** with the cyclone bin assembly in an open position;

FIG. **116** is a cross-sectional view of the handvac of the apparatus of FIG. **1** having a pre-motor filter chamber in an open position;

FIG. **117** is a exploded view of the handvac of FIG. **116**;

FIG. **118** is a cross-sectional view of a surface cleaning apparatus having a plurality of cyclone chambers in parallel;

FIG. **119***a* is a cross-sectional view of a surface cleaning apparatus having a dirty air suction motor in a surface cleaning head in series with a clean air suction motor in a handvac;

FIG. **119***b* is a cross-sectional view of the surface cleaning apparatus of FIG. **119***a* with a supplemental cyclone bin assembly removed;

FIG. **120** is a cross-sectional view of a surface cleaning apparatus having a clean air suction motor in a surface cleaning head in series with a clean air suction motor in a handvac;

FIG. **121***a* is a cross-sectional view of a surface cleaning apparatus having a clean air suction motor in a supplemental cyclone bin assembly in series with a clean air suction motor in a handvac;

FIG. **121***b* is a cross-sectional view of the surface cleaning apparatus of FIG. **121***a* with a hose connecting the handvac suction motor and the suction motor of the supplemental cyclone bin assembly;

FIG. **122** is a cross-sectional view of a surface cleaning apparatus having an airflow which bypasses the handvac;

FIG. **123** is a perspective view of a surface cleaning apparatus in accordance with another embodiment;

FIG. **124** is an exploded perspective view of the surface cleaning apparatus of FIG. **123**;

FIG. **125** is a cross-sectional view taken along line **125-125** in FIG. **123**;

FIG. **126** is enlarged partial view of FIG. **125**; and

FIG. **127** is an enlarged partial view of FIG. **126**.

DESCRIPTION OF VARIOUS EMBODIMENTS

Numerous embodiments are described in this application, and are presented for illustrative purposes only. The described embodiments are not intended to be limiting in any sense. The invention is widely applicable to numerous embodiments, as is readily apparent from the disclosure herein. Those skilled in the art will recognize that the present invention may be practiced with modification and alteration

without departing from the teachings disclosed herein. Although particular features of the present invention may be described with reference to one or more particular embodiments or figures, it should be understood that such features are not limited to usage in the one or more particular embodiments or figures with reference to which they are described.

The terms "an embodiment," "embodiment," "embodiments," "the embodiment," "the embodiments," "one or more embodiments," "some embodiments," and "one embodiment" mean "one or more (but not all) embodiments of the present invention(s)," unless expressly specified otherwise.

The terms "including," "comprising" and variations thereof mean "including but not limited to," unless expressly specified otherwise. A listing of items does not imply that any or all of the items are mutually exclusive, unless expressly specified otherwise. The terms "a," "an" and "the" mean "one or more," unless expressly specified otherwise.

As used herein and in the claims, two or more parts are said to be "coupled", "connected", "attached", or "fastened" where the parts are joined or operate together either directly or indirectly (i.e., through one or more intermediate parts), so long as a link occurs. As used herein and in the claims, two or more parts are said to be "directly coupled", "directly connected", "directly attached", or "directly fastened" where the parts are connected directly in physical contact with each other. As used herein, two or more parts are said to be "rigidly coupled", "rigidly connected", "rigidly attached", or "rigidly fastened" where the parts are coupled so as to move as one while maintaining a constant orientation relative to each other. None of the terms "coupled", "connected", "attached", and "fastened" distinguish the manner in which two or more parts are joined together.

General Overview

Referring to FIGS. **1-3**, a surface cleaning apparatus **100** is shown in accordance with a first embodiment. In the embodiment shown, the surface cleaning apparatus **100** is a type of upright vacuum cleaner which is referred to as a stick vacuum cleaner. As illustrated, surface cleaning apparatus **100** includes a surface cleaning head **104**, an upright section **108**, and a hand-carriable vacuum cleaner **112** (also referred to as handvac or hand vacuum cleaner **112**).

Upright section **108** may be movably and drivingly connected to surface cleaning head **104**. For example, upright section **108** may be permanently or removably connected to surface cleaning head **104** and moveably mounted thereto for movement from a storage position to an in use position, such as by a pivotable joint **116**. Joint **116** may permit upright section **108** to pivot (i.e. rotate) with respect to surface cleaning head **104** about a horizontal axis. Accordingly, upright section **108** may be rotatable rearwardly so as to be positionable in a plurality of reclined floor cleaning positions (see for example FIGS. **81** and **108**).

Upright section **108** may also be steeringly connected to surface cleaning head **104** for maneuvering surface cleaning head **104**. For example, joint **116** may be a swivel joint.

Handvac **112** may be removably connected to upright section **108**. When mounted to upright section **108**, a user may grasp handvac **112** to manipulate upright section **108** to steer surface cleaning head **104** across a surface to be cleaned. Accordingly, when handvac **112** is mounted to upright section **108**, handle **484** is the drive handle of surface cleaning apparatus **100**

Surface cleaning apparatus **100** has at least one dirty air inlet, one clean air outlet, and an airflow path extending between the inlet and the outlet. In the illustrated example, lower end **120** of surface cleaning head **104** includes a dirty air inlet **124**, and a rear end **128** of handvac **112** includes a clean air outlet **132**. An airflow path extends from dirty air inlet **124** through surface cleaning head **104**, upright section **108**, and handvac **112** to clean air outlet **132**.

As exemplified, at least one suction motor, and preferably the only suction motor, and one air treatment member, which may be the only air treatment member, is provided in the handvac **112** to permit handvac **112** to operate independently when disconnected from surface cleaning head **104** and optionally from upright section **108**. It will be appreciated that while at least one suction motor and at least one air treatment member are positioned in the airflow path to separate dirt and other debris from the airflow, that when used with other aspects disclosed herein, each of the suction motor and the air treatment member may be provided in the surface cleaning head **104**, the upright section **108**, and/or the handvac **112**.

The air treatment member may be any suitable air treatment member, including, for example, one or more cyclones, filters, and bags. Preferably, at least one air treatment member is provided upstream of the suction motor to clean the dirty air before the air passes through the suction motor. In the illustrated embodiment, handvac **112** includes a cyclone bin assembly **136** including a cyclone chamber and a dirt collection region. In some embodiments, the dirt collection region may be a portion (e.g., a lower portion) of the cyclone chamber. In other embodiments, the dirt collection region may be a dirt collection chamber that is separated from the cyclone chamber by a dirt outlet of the cyclone chamber. Plurality of Dirt Collection Chambers

In accordance with one aspect of this disclosure, which may be used by itself or in combination with any one or more other aspects of this disclosure, a stick surface cleaning apparatus may have more than one dirt collection chamber. For example, the handvac may include a first dirt collection chamber, and the upright section may include a second dirt collection chamber. The second dirt collection chamber provides the surface cleaning apparatus with an enlarged dirt collection capacity in comparison with the dirt collection capacity of the handvac alone. Accordingly, the surface cleaning apparatus may operate for longer intervals before one or more of the dirt collection chambers needs to be emptied.

In accordance with this aspect, and as exemplified in FIG. **4**, upright section **108** may have an auxiliary dirt collection assembly **140**, which may comprise or consist of an auxiliary dirt collection chamber **141**. For example, the auxiliary dirt collection chamber **140** may be the only component provided in the auxiliary dirt collection assembly and therefore the auxiliary dirt collection chamber **140** may be the auxiliary dirt collection assembly. Alternately, as disclosed in alternate embodiments, the auxiliary dirt collection assembly may also include one or more of a pre-motor filter, one or more cyclone chambers that may have one or more associated dirt collection chambers and a suction motor.

As illustrated, up flow duct **144** (also referred to as a wand if removable for use, e.g., in an above floor cleaning mode as exemplified in FIGS. **33** and **44***a*) may define the airflow path between surface cleaning head **104** and handvac **112**. Auxiliary dirt collection chamber **140** may be a supplemental dirt collection chamber that is selectively mounted to up flow duct **144** and augments the dirt collection capacity of surface cleaning apparatus **100** when mounted to upper section **108**.

It will be appreciated that if up flow duct **144** is the member that supports handvac **112** when auxiliary dirt

collection assembly **140** is removed, the up flow duct is designed to be load supporting and may be a rigid tube. Further if the up flow duct is removable to function as an above floor cleaning wand, then the up flow duct may also be a rigid tube. In other embodiments, e.g., the up flow duct is not a load supporting member, then all or a portion of up flow duct **144** may be flexible, such as a flexible hose.

As exemplified in FIGS. **1** and **21**, the dirt collection assembly **140** of the upright section **108** may collect at least a portion of the dirt separated from the dirty airflow by the handvac **112**. Accordingly, the dirt collection assembly **140** of the upright section **108** may be in communication with the dirt collection chamber of handvac **112** all or a portion of the time when the handvac **112** is mounted to the upright section **108**. For example, the dirt collection chamber of handvac **112** may have a door that automatically opens when handvac **112** is mounted to the upright section **108**. Accordingly, dirt separated by handvac **112** may travel to the supplemental dirt collection assembly **140**. Alternately, the door may be manually operable by a user. Accordingly, dirt may only be transferred to the supplemental dirt collection assembly **140** when a user elects to open the door. Alternately, the supplemental dirt collection assembly **140** may receive dirt from an auxiliary air treatment member, in which case the auxiliary dirt collection assembly may comprise a housing having both the auxiliary air treatment member and the auxiliary dirt collection chamber.

The dirt collection chamber of auxiliary dirt collection assembly **140** and handvac dirt collection chamber **188** may be of any suitable volumetric sizes. Preferably, the volumetric storage capacity of the dirt collection chamber of auxiliary dirt collection assembly **140** is at least equal to the volumetric storage capacity of handvac dirt collection chamber **188**, and more preferably larger than the volumetric storage capacity of handvac dirt collection chamber **188**. For example, the volumetric storage capacity of the dirt collection chamber of auxiliary dirt collection assembly **140** may be 1-20 times the volumetric storage capacity of handvac dirt collection chamber **188**, more preferably 1.5-10 times, and most preferably 3-5 times. In alternative embodiments, the volumetric storage capacity of the dirt collection chamber of auxiliary dirt collection assembly **140** may be less than that of handvac dirt collection chamber **188**.

As exemplified in FIG. **21**, handvac **112** may include a cyclone bin assembly **136** including one or more cyclone chambers **184** and one or more dirt collection chambers **188**. The cyclone chamber or chambers and the dirt collection chamber or chambers may be of any design. As exemplified, cyclone chamber **184** includes an air inlet **192** in fluid communication with wand **144**, an air outlet **196** downstream of air inlet **192**, and a dirt outlet **200** in fluid communication with dirt collection chamber **188**. Suction motor **204** or another suction source may draw dirty air to enter air inlet **192** and travel cyclonically across cyclone chamber **184** to dirt outlet **200** where dirt is ejected into dirt collection chamber **188**. Afterwards, the air is discharged from cyclone chamber **184** at air outlet **196**.

As exemplified in FIGS. **21-23**, cyclone bin assembly **136** may include laterally opposed side walls **208**, a top wall **212**, a bottom wall **216**, a first end wall **220**, and a second end wall **224**. As shown, a common interior wall **226** may divide cyclone chamber **184** from dirt collection chamber **188**. For example, cyclone chamber **184** may be defined by top wall **212** and interior wall **226** which extend between end walls **220** and **224**. Top wall **212** and interior wall **226** may be curved to define a substantially cylindrical or frustroconical sidewall of cyclone chamber **184**. In alternative embodiments, cyclone chamber **184** may have a sidewall of any other suitable shape that is conducive to cyclonic flow. In some alternative embodiments, interior wall **226** of cyclone chamber **184** may be discrete from dirt collection chamber **188** instead of forming a common wall dividing cyclone chamber **184** from dirt collection chamber **188**.

Dirt collection chamber **188** may be defined by bottom wall **216**, side walls **208**, and interior wall **226**. In some embodiments, bottom wall **216** may be openable for fluidly connecting handvac dirt collection chamber **188** to supplemental dirt collection assembly **140** of upright section **108**. This may permit dirt separated by cyclone chamber **184** and discharged through dirt outlet **200** to move through opened bottom wall **216** and collect in supplemental dirt collection assembly **140**.

Optionally, when the auxiliary dirt collection assembly is mounted to upright section **108**, dirt separated in the cyclone chamber is collectable in the dirt collection chamber of the auxiliary dirt collection assembly. The auxiliary dirt collection assembly may be selectively connectable in communication with the dirt collection region of the hand vacuum cleaner by, e.g., an openable door **228** (also referred to as a dumping door). The door may be manually openable, such as by a handle, or automatically operated, such as when the auxiliary dirt collection assembly is mounted to upright section **108**. In this case, dirt will collect in the handvac **112** and will remain there until door **228** is openable so as to allow the collected dirt to transfer to supplemental dirt collection assembly **140**. In the latter case, supplemental dirt collection assembly **140** is automatically connected in communication with a dirt outlet of the cyclone chamber when the auxiliary dirt collection assembly is mounted to upright section **108**. In this case, dirt will collect in the supplemental dirt collection assembly **140** when handvac **112** is mounted to the upright section **108**.

In the illustrated example, bottom wall **216** includes a door **228**, which may be a pivotally openable door **228**. As shown, door **228** may be pivotally connected to dirt collection chamber **188** by a hinge **232** for rotation about a hinge axis **236**. Door **228** may extend forwardly from a rear end **240** to a front end **244**. Preferably, hinge **232** and hinge axis **236** are positioned at rear end **240** of door **228**. In alternative embodiments, hinge **232** and hinge axis **236** may be positioned at front end **244** or intermediate front and rear ends **240** and **244**.

Door **228** is preferably outwardly pivotal of dirt collection chamber **188**. For example, door **228** may be movable between a closed position (FIG. **22**) in which door **228** closes bottom wall **216**, and an open position (FIG. **21**) in which door **228** is rotated away from dirt collection chamber **188** for opening bottom wall **216** to permit dirt to move from handvac dirt collection chamber **188** to supplemental dirt collection assembly **140**. As shown, in the open position front end **244** of door **228** may be moved away from handvac dirt collection chamber **188**.

Hinge axis **236** may have any suitable orientation. In the illustrated example, hinge axis **236** extends laterally side-to-side of surface cleaning apparatus **100**. Hinge axis **236** may be transverse to one or more of cyclone axis **248** of cyclone chamber **184**, motor axis **252** of suction motor **204**, or downstream direction **256** through air inlet **192**. In the example shown, hinge axis **236** is perpendicular to cyclone axis **248**, motor axis **252**, and downstream direction **256**. In alternative embodiments, hinge axis **236** may be substantially parallel to one or more of cyclone axis **248**, motor axis **252**, or downstream direction **256**.

In some embodiments, door **228** may extend upwardly and forwardly between rear end **240** and front end **244**. For example, front end **244** may be positioned closer to cyclone chamber **184** and cyclone axis **248** than rear end **240**. When door **228** is opened (FIG. **21**), this may provide a bottom opening **260** having a transverse width **264** between cyclone chamber **184** and bottom wall **216**.

Optionally, the dirt collection region (the dirt collection chamber) of the hand vacuum cleaner is positioned above the supplemental dirt collection assembly **140**. Accordingly, dirt that is received in the dirt collection chamber of the hand vacuum cleaner may be transferred by due to gravity to the supplemental dirt collection assembly **140**. Accordingly, for example, dirt outlet **200** may be positioned on a bottom end **268** of cyclone chamber **184** for discharging dirt toward bottom wall **216** and opening **260** to be delivered by gravity into supplemental dirt collection assembly **140** of upright section **108**.

Reference is now made to FIGS. **21**, **22**, and **24**. Preferably, when handvac **112** is connected to upright section **108**, opening **260** is fluidly coupled to an inlet to dirt collection assembly **140**. In the illustrated example, door **228** and opening **260** of cyclone bin assembly **136** align with an inlet **272** of dirt collection assembly **140**. As shown, inlet **272** may be formed as an opening in an upper portion **276** of dirt collection assembly **140**. In some embodiments, inlet **272** may include a door (not shown) which opens automatically and concurrently with door **228**. Optionally, the door of inlet **272** may be biased (e.g. by a spring) to close inlet **272** and seal dirt collection assembly **140** when door **228** is closed or handvac **112** is disconnected from upright section **108**.

Preferably, opening **260** and inlet **272** of upper portion **276** of dirt collection assembly **140** are sized and positioned to receive at least a portion of door **228** when door **228** is in the open position. This may permit door **228** to open outwardly into the open position as shown in FIG. **21**.

If door **228** is moveable from the closed position to the open position automatically upon connecting handvac **112** to upright section **108**, then handvac **112** may include an actuator drivingly connected to door **228** to move door **228** (e.g., pivot door **228** about hinge axis **236**) to the open position when handvac **112** is connected to upright section **108**. In the illustrated embodiment, door **228** includes an arm **280** pivotally connected at hinge **232**. As shown, arm **280** may include a lever portion **284** which extends rearwardly of hinge **232**, and which may be depressed to pivot door **228** to the open position. Further, dirt collection assembly **140** is shown including an engaging member **288** positioned to align with lever portion **284** of arm **280**. In use, engaging member **288** may depress lever portion **284** of arm **280** upon connecting handvac **112** to upright section **108** to automatically pivot door **228** into the open position, whereby opening **260** may be fluidly connected to inlet **272** of supplemental dirt collection assembly **140**. In one aspect, this may permit a user, who has used handvac **112** when disconnected from upright section **108**, to automatically empty handvac dirt collection chamber **188** by connecting handvac **112** to upright section **108**. Afterwards, handvac **112** may be disconnected from upright section **108** with an empty dirt collection chamber **188**.

If door **228** is manually moveable from the closed position to the open position then, as exemplified in FIGS. **97***a-b* and **98***a-b*, door **228** may be provided with an actuator, e.g., a manually operable lever portion **284**. Lever portion **284** may extend downwardly from door **228** such that lever portion **284** is user-accessible and user-operable while handvac **112** is mounted to upright section **108**. As exemplified, lever portion **284** may protrude from the bottom wall **216** of cyclone bin assembly **136** to provide user-accessibility to lever portion **284**.

As exemplified in FIGS. **21**, **22**, **24**, **97***a-b*, and **98***a-b*, whether door **228** is manually or automatically operable, door **228** may be biased to the closed position. For example, door **228** may be biased for rotation about hinge axis **236** toward the closed position by a biasing member (not shown), such as a torsion spring. This may permit door **228** to close automatically upon disconnecting handvac **112** from upright section **108**, to prevent dirt from spilling from dirt collection chamber **188** and to permit immediate use of handvac **112** for cleaning. In alternative embodiments, door **228** may not be biased toward the closed position. For example, door **228** may remain in the open position upon disconnecting handvac **112** from upright section **108**. In such a case, door **228** may remain open until manually closed. For example, referring to FIGS. **98***a-b*, door **228** may remain in the open position shown until lever portion **284** of arm **280** is user-activated to move door **228** to the closed position.

Removable Supplemental Dirt Collection Assembly

In accordance with another aspect of this disclosure, which may be used by itself or in combination with any one or more other aspects of this disclosure, a surface cleaning apparatus has two or more dirt collection chambers wherein one of the dirt collection chambers is optionally removable, and the surface cleaning apparatus is operable when the removable dirt collection chamber has been removed. Accordingly, as discussed with respect to the previous embodiment, a supplemental dirt collection chamber may be provided on the up flow duct or wand of a stick vacuum cleaner and may be the main dirt collection chamber (e.g., it may collect most or all of the separated dirt when the stick vacuum cleaner is operated with the supplemental dirt collection chamber in position). This may be referred to as a large dirt capacity upright mode or a second upright mode of operation.

The supplemental dirt collection chamber may be removable for emptying and to reconfigure the vacuum to a light weight upright mode or a first upright mode of operation. Once removed, the vacuum cleaner may be operable to separate dirt and collect the separated dirt in another dirt collection chamber (e.g. the handvac dirt collection chamber). An advantage of the light weight upright mode is that the size and weight of the vacuum cleaner may be reduced by removal of the supplemental dirt collection chamber. This may be of assistance when the vacuum cleaner is used to clean around and under furniture, and when the vacuum cleaner is to be carried upstairs.

As exemplified in FIGS. **1** and **4**, dirt collection assembly **140** of upright section **108** may be removably connected to wand **144** and handvac **112**. This may permit dirt collection assembly **140** to be removed for emptying, or to operate apparatus **100** in a light weight upright mode. It will be appreciated that, in alternate embodiments, wand **144** and dirt collection assembly **140** of upright section **108** may be integrally formed or permanently connected as a one piece assembly.

Dirt collection assembly **140** may be removably mounted to wand **144** in any suitable fashion. In the illustrated embodiment, a lower end **292** of dirt collection assembly **140** may be toed onto a lower end **296** of wand **144**, and then dirt collection assembly **140** may be pivoted about lower end **292** toward wand **144** and held in position by a suitable releasable fastening mechanism.

In the illustrated embodiment, handvac **112** may remain in fluid communication with wand **144** and surface cleaning

head **104** while supplemental dirt collection assembly **140** is disconnected from wand **144** and removed altogether from apparatus **100**. This may permit dirt collection assembly **140** to be removed (e.g., for emptying or to operate apparatus **100** in a light weight upright mode) without disrupting the operation of apparatus **100**.

Upstream Air Treatment Member

In accordance with another aspect of this disclosure, which may be used by itself or in combination with any one or more other aspects of this disclosure, an upstream air treatment member may be provided. The upstream air treatment member may be removably connectable upstream of the handvac. For example, the supplemental dirt collection assembly may have one or more cyclone chambers associated therewith. Accordingly, when the supplemental dirt collection assembly is positioned on upright section **108** (e.g., up flow duct **144**), a supplemental cyclone chamber assembly **160** may be connected in series or parallel with the cyclone chamber of the handvac. Accordingly, when operated as an upright vacuum, the surface cleaning apparatus may be a dual cyclonic stage surface cleaning apparatus. When used in an above floor cleaning mode, the handvac may be a single cyclonic stage surface cleaning apparatus. Typically, the surface cleaning apparatus may be used as an upright vacuum cleaner (i.e., with the supplemental cyclonic bin assembly attached) for cleaning floors. This may represent the majority of area that is to be cleaned. Therefore, for a majority of the use of the surface cleaning apparatus, it may be used as a dual stage cyclonic surface cleaning apparatus.

In accordance with this aspect, the upright section may include a first air treatment member for separating at least large dirt particles from the airflow, and the air treatment member of the handvac may be positioned downstream of the first air treatment member for separating small dirt particles ("fines") from the airflow. In this case, the greatest volume of separated dirt may be collected in the dirt collection chamber of the upright section, and a lesser volume of fines may be collected in the dirt collection chamber of the handvac. This may reduce the rate at which the handvac dirt collection chamber may be filled, and reduce the frequency at which the handvac dirt collection chamber must be emptied. It will be appreciated that each cyclonic stage may be of any design and may be designed to remove any type of dirt.

It will be appreciated that, in some embodiments, dirt separated by the handvac may be collected in the supplemental dirt collection assembly. In such a case, the dirt collection region of the handvac may be in communication (automatically or manually selectively) with a dirt collection region in the supplemental dirt collection assembly, which region may be isolated from the dirt collection chamber for the cyclonic stage of the supplemental cyclone chamber assembly.

It will be appreciated that, if air travels through up flow duct **144** to handvac **112**, when cyclone bin assembly **160** is connected to wand **144**, air travelling through wand **144** may be diverted into cyclone bin assembly **160** and returned to wand **144** from cyclone bin assembly **160** downstream of the diversion. Optionally, in accordance with another aspect with is discussed in more detail subsequently, and which is exemplified in the embodiment of FIGS. **20** and **26**, in some embodiments the diversion may occur automatically upon mounting of the supplemental cyclone bin assembly **160** to upright section **108**. For example, cyclone bin assembly **160** may include a diversion member **428** which may be positionable in the conduit of wand **144** between the upstream and downstream ends **364** and **360** of wand **144**. As shown, diversion member **428** may divide wand **144** into an upstream wand portion **440** and a downstream wand portion **444**. Diversion member **428** may form an air-tight seal inside wand **144** for redirecting substantially all air travelling through upstream wand portion **440** into air inlet **316** of cyclone bin assembly **160**. In turn, air outlet **320** of cyclone bin assembly **160** may discharge into downstream wand portion **444** for travel downstream to handvac **112**.

As exemplified in the embodiment of FIGS. **5**, **12**, and **25** supplemental cyclone bin assembly **160**, **160** may be any suitable cyclone bin assembly and may include a cyclone chamber **308** and a dirt collection chamber **141**. Cyclone chamber **308** may include an air inlet **316** for receiving dirty air from the surface cleaning head, e.g., via wand **144**, an air outlet **320** for discharging air, e.g., to handvac **112**, a dirt outlet **324** for discharging separated dirt into dirt collection chamber **141**, a vortex finder **400** and a cyclone axis **392**. Wand **144** may include an upstream end **360** connected to surface cleaning head **104**, and a downstream end **364** connected to air inlet **316** of cyclone chamber **308**.

From cyclone bin assembly **160**, the airflow may flow downstream to handvac **112**. Accordingly, handvac cyclone bin assembly **136** is positioned downstream of and in series with supplemental cyclone bin assembly **160**. The air may be received in handvac cyclone bin assembly **136** where additional particulate matter may be further separated from the airflow and deposited into dirt collection chamber **188**. In many cases, the additional particulate matter separated by cyclone bin assembly **136** may constitute less than 30% of the total volume of dirt separated from apparatus **100**, and may constitute all or a majority of the fines that are separated. Accordingly, dirt collection chamber **188** may be filled at a lower volumetric rate than supplemental dirt collection chamber **141**. This may help to maintain dirt collection capacity in handvac **112**.

In operation, air exiting air outlet **320** of cyclone bin assembly **160** may enter handvac **112** for a second stage of cleaning by cyclone bin assembly **136**. As illustrated, handvac **112** may include a nozzle **412** having an upstream end **416** and a downstream end **420**. When handvac **112** is connected to upright section **108**, upstream end **416** may be fluidly connected with air outlet **320** of upright section **108**, and downstream end **420** may be fluidly connected with inlet **192** of handvac cyclone chamber **184**.

In operation, air may be drawn into dirty air inlet **124** and enter upstream wand portion **440**. Diversion member **428** may redirect the air traveling through upstream wand portion **440** to enter air inlet **316** of cyclone chamber **308**. Air may travel through air inlet **316** tangentially to sidewall **376** and spiral downwardly toward lower end wall **368**, whereby dirt may be separated from the airflow and pass through dirt outlet **324** to accumulate in dirt collection chamber **141**. The airflow may then travel downstream into vortex finder **400** and exit cyclone chamber **308** at air outlet **320** at downstream end **404** of vortex finder **400**, into an outlet passage **476**. Outlet passage **476** may have a downstream end fluidly connected to downstream wand portion **444**. The air may travel through downstream wand portion **444** to downstream wand end **364** into handvac **112**. In handvac **112**, additional dirt may be separated from the airflow by cyclone bin assembly **136** before the air is discharged through clean air outlet **132**.

It will be appreciated that, in accordance with this aspect, cyclone bin assembly **160** may be any suitable cyclone bin assembly. In the example shown in FIGS. **5**, **12**, and **25**, cyclone chamber **308** includes a lower end wall **368**, an

upper end wall **372**, and a sidewall **376** extending between the lower end wall **368** and the upper end wall **372**. Preferably, sidewall **376** is substantially cylindrical or frustroconical in accordance with conventional cyclone chamber design.

Dirt outlet **324** may be formed as an opening in sidewall **376** for directing separated dirt into dirt collection chamber **141**. In some embodiments, at least a portion of sidewall **376** of cyclone chamber **308** may form a common dividing wall between cyclone chamber **308** and dirt collection chamber **141**. In this case, dirt outlet **324** may be formed as an opening in the common portion of sidewall **376**.

Dirt outlet **324** may be formed at any suitable position on sidewall **376**. In the illustrated example, dirt outlet **324** is positioned at an upper end of cyclone chamber **308** proximate upper end wall **372**. More particularly, the illustrated embodiment includes a dirt outlet **324** defined by a slot **380** in sidewall **376** bordered by upper end wall **372**. This may increase the capacity of dirt collection chamber **141**. More specifically, dirt may accumulate by gravity from the bottom of dirt collection chamber **141** upwardly. Thus, the capacity of the dirt collection chamber **141** may be defined at least in part by the position of dirt outlet **324**. Dirt collection chamber **141** is full when the level of dirt in dirt collection chamber **141** rises to dirt outlet **324**. Accordingly, the capacity of dirt collection chamber **141** is the volume of the dirt collection chamber **141** below dirt outlet **324**. Thus, the capacity of dirt collection chamber **141** may be increased by positioning dirt outlet **324** in an uppermost position, such as proximate the upper end wall **372** of cyclone chamber **308** as shown.

Alternately, in some embodiments as exemplified in FIG. **26**, lower end wall **368** may comprise or be an arrester plate **1280** which separates cyclone chamber **308** from dirt collection chamber **141**. In this case, dirt outlet **324** may be formed by a gap between arrester plate **1280** and sidewall **376**, where dirt particles may fall by gravity into dirt collection chamber **141**.

In accordance with another aspect which is discussed in more detail subsequently, as exemplified, cyclone chamber **308** may include an inlet passage **384** for redirecting axially-directed inlet air to flow tangentially to promote cyclonic action in cyclone chamber **308**. An upstream end **388** of inlet passage **384** may face axially (i.e. substantially parallel to cyclone axis **392**), and a downstream end (not shown) of inlet passage **384** may face tangentially to cyclone chamber **308**. Air entering upstream end **388** of inlet passage **384** from air inlet **316** may travel along inlet passage **384** and exit downstream end (not shown) in a tangential direction. After spiraling upwardly around vortex finder **400** of cyclone chamber **308**, the airflow may enter vortex finder **400** and exit cyclone chamber **308** through air outlet **320** at a downstream end **404** of vortex finder **400**.

Handvac cyclone chamber **184** may be any suitable cyclone chamber. In some embodiments, cyclone chamber **184** is substantially similar to cyclone chamber **308**. For example, cyclone chamber **184** may include an air inlet **192**, an inlet passage **420**, a dirt outlet **200**, a vortex finder **424**, a dirt outlet **200**, an air outlet **196**, and a cyclone axis **248**. Air from upright section **108** may axially enter air inlet **192**, be redirected to a tangential direction by inlet passage **420**, spiral upwardly around vortex finder **424**, deposit dirt into dirt outlet **200**, and then exit cyclone chamber **184** through air outlet **196** at a downstream end of vortex finder **424**.

Modes of Operation

In accordance with another aspect of this disclosure, which may be used by itself or in combination with any one or more other aspects of this disclosure, the surface cleaning apparatus is reconfigurable to operate in a plurality of different modes of operation. For example, the surface cleaning apparatus may be operable in two or more of a handvac mode, a stair-cleaning mode, an above-floor cleaning mode, a large dirt capacity upright mode, a lightweight upright mode, or a dual motor upright mode. In some cases, the surface cleaning apparatus may be reconfigurable between different modes of operation with a single act of connection or disconnection. This may permit the surface cleaning apparatus to be quickly reconfigured with minimal interruption.

Referring to FIGS. **1**, **5**, and **13**, surface cleaning apparatus **100**, **152**, and **168** are shown in a large dirt capacity upright cleaning mode. In the large dirt capacity upright cleaning mode, surface cleaning apparatus **100**, **152**, and **168** may include surface cleaning head **104**, upright section **108** including wand **144** and supplemental dirt collection assembly **140**, and handvac **112**. The airflow path may extend from dirty air inlet **124** of surface cleaning head **104** downstream through wand **144** and then cyclone bin assembly **136** of handvac **112** to separate dirt from the airflow and deposit that dirt into dirt collection chamber **141** of upright section **108** and/or handvac dirt collection chamber **188**. In apparatus **152** and **168**, cyclone bin assembly **160** is also positioned in the airflow path for separating and collecting dirt from the airflow and cyclone bin assembly **136** of handvac **112** may optionally be bypassed as discussed subsequently.

As exemplified in FIGS. **12** and **12***a* one or more of the surface cleaning head **104**, upright section **108**, and handvac **112** may be removably connected to each other so as to be able to be assembled in a number of different combinations to provide apparatus **152** with a number of different modes of operation. In some embodiments, the wand **144** and supplemental assembly **140**, **160** of upright section **108** may also be removably connected to each other to provide additional modes of operation. For example, in the large dirt capacity upright cleaning mode, surface cleaning head **104** may be connected to upstream end **360** of wand **144**, downstream end **364** of wand **144** may be connected to an air inlet **316** of cyclone bin assembly **160**, and air outlet **320** of cyclone bin assembly **160** may connected to upstream end **416** of handvac nozzle **412**.

The large dirt capacity upright cleaning mode as shown may be particularly effective for cleaning large surface areas (e.g. the floor of one or more rooms). The user may grasp handvac handle **484** to steer surface cleaning head **104** across the surface to be cleaned (i.e. handle **484** may be a drive handle of the surface cleaning apparatus). The tall height **492** of apparatus **100**, **152**, and **168** provided in part by the interposition of wand **144** between surface cleaning head **104** and handvac **112** may permit apparatus **100** to be operated by a user standing upright. The large dirt capacity of dirt collection chamber **141** of upright section **108** may permit extended usage of apparatus **100** before the dirt collection chamber **141** becomes full and must be emptied.

As exemplified in FIGS. **4**, **5**, **12**, **12***a*, **20** and **27-30**, and **37-44** dirt collection assembly **140** or cyclone bin assembly **160** may be selectively disconnected from upright section **108** to reconfigure apparatus **100**, **152**, or **168** from the large dirt capacity upright mode to a light weight upright mode. Likewise, dirt collection assembly **140** or cyclone bin assembly **160** may be selectively reconnected to upright section **108** to reconfigure apparatus **100**, **152**, or **168** from a light weight mode to a large dirt capacity upright mode.

Preferably, reconfiguring the apparatus from the large dirt capacity upright mode to the light weight upright mode may require only a single user action (e.g., disconnecting the dirt collection assembly **140** or cyclone bin assembly **160** from the upright section **108** may automatically close a dumping door of the handvac if the dumping door is open and may also automatically close a diversion member if the vacuum cleaner includes a supplemental cyclone bin assembly **160**).

As exemplified in apparatus **100**, door **228** which may have been open in the large dirt capacity upright mode for connecting dirt collection chambers **188** and **141**, may close automatically (i.e. without any further user interaction) upon disconnecting dirt collection chamber **141**, to seal bottom wall **216** of dirt collection chamber **141**. Exemplary mechanisms include a biasing member, such as a spring and a mechanical or electrical drive member drivingly connected to the door to close the door as supplemental assembly **140**, **160** is removed.

As exemplified in apparatus **168**, disconnecting cyclone bin assembly **160** from wand **144** may automatically reroute the airflow path to extend directly from upstream wand end **360** to downstream wand end **364** without the intermediary diversion to cyclone bin assembly **160**. Therefore, the airflow path between surface cleaning head **104** and handvac **112** is automatically reconfigured by disconnection of cyclone bin assembly **160** to reconfigure apparatus **168** to the light weight upright mode. Accordingly apparatus **168** may be continually operated while being reconfigured.

In alternative embodiments, door **228** of apparatus **100** may be manually closed as another step before, during or after dirt collection assembly **140** is disconnected from upright section **108** to complete the reconfiguration to the light weight upright mode. For example, a user may manually close the door. In other embodiments, as described in more detail below, a diversion valve of apparatus **168** may require manual closure as another step after cyclone bin assembly **160** is disconnected from wand **144** to complete the reconfiguration to the light weight upright mode. Alternately, a single actuator may be manually operated to close the door and the diversion valve.

As exemplified in FIG. **4**, apparatus **152** may be reconfigurable from the large dirt capacity upright mode to a light weight upright mode by disconnecting assembly **140**, **160** from wand **144**. In some cases, it may be desirable to momentarily reconfigure an apparatus to the lightweight upright mode to complete a task (e.g. clean under an article of furniture), and afterward reconfigure the apparatus to the large dirt capacity upright mode. In the illustrated example, the airflow path between surface cleaning head **104** and handvac **112** persists during and after reconfiguration of apparatus **100** from the large dirt capacity upright mode to the lightweight upright mode. This may permit apparatus **100**, to be operated continuously (i.e. air to continue to travel between inlet **124** and outlet **132**) before, during, and after reconfiguration to the lightweight upright mode. In turn, this may allow for a quick reconfiguration with little or no disruption. It will be appreciated that if a cyclone is provided in the supplemental assembly (e.g., assembly **160**), there may be a short period during which the diversion valve is not closed during the transition.

In some cases, reconfiguring apparatus **100**, **152**, or **168** from the large dirt capacity upright mode to the lightweight upright mode may provide a reduction in weight (i.e. by the removal of dirt collection assembly **140** or cyclone bin assembly **160**), and a more slender profile. Thus, the lightweight upright mode may make apparatus **100**, **152**, or **168** easier to lift (e.g. carry upstairs), and easier to maneuver under and around furniture and the like. However, in this mode, all of the dirt separated by cyclone bin assembly **136** in the lightweight upright mode is collected in dirt collection chamber **188**. Thus, apparatus **100**, **152**, or **168** may have less dirt collection capacity in the lightweight upright mode as compared with the large dirt capacity upright mode.

Referring now to FIGS. **31-33**, **44***a*, and **44***b*, apparatus **100** and **168** are shown in an above-floor cleaning mode. As illustrated, apparatus **100** and **168** in the above-floor cleaning mode include handvac **112** and wand **144**. Apparatus **100**, **152**, and **168** may be reconfigured from the lightweight upright mode to the above-floor cleaning mode by disconnecting surface cleaning head **104** from wand **144**. It will be appreciated that assembly **140**,**160** may be retained in an above floor cleaning mode if desired. However, this would add extra weight to the apparatus in the above floor cleaning mode.

Referring to FIG. **36***a*, apparatus **152** is shown in another above-floor cleaning mode. As shown, apparatus **152** in an above-floor cleaning mode may include handvac **112** and an accessory wand **145**. Accessory wand **145** may be provided supplementary to wand **144** of upright section **108**. For example, accessory wand **145** may be removably mountable to a sidewall of upright section **108**, as shown in FIG. **5**. Still referring to FIG. **36***a*, in the above-floor cleaning mode shown, upstream end **360** may provide the dirty air inlet, and downstream end **364** may be removably fluidly connected to handvac nozzle **412**. Accessory wand **145** may have any suitable length **516**. For example, wand **144** may have a length sufficient to permit apparatus **100** to be used as an upright vacuum cleaner in the configuration of FIG. **5**. Accordingly, wand **144** may be 2-4 feet long. In contrast, accessory wand **145** may be shorter than wand **144** (e.g., a user wants to be closer to the area to be cleaned in an above floor cleaning mode) and accordingly accessory wand **145** may be 6-18 inches.

In the above-floor cleaning mode, the upstream end **496** of wand **144** may provide the dirty air inlet of apparatus **100**, **152**, or **168**. The above-floor cleaning mode may be well suited to cleaning surfaces above the floor, or more generally surfaces that are not substantially horizontal, and for cleaning in crevices which surface cleaning head **104** might be unable to access. The wand **144** may provide extended reach for distant cleaning surfaces (e.g. curtains, and ceilings). An auxiliary cleaning tool such as a crevice tool, brush or the like may be attached to the inlet end of the wand.

Preferably, apparatus **100**, **152**, or **168** may be reconfigured from the lightweight upright mode to the above-floor cleaning mode by a single user action—disconnection of surface cleaning head **104** from the upstream end **496** of wand **144**. This may permit the apparatus to be quickly reconfigured with little or no disruption. For example, the apparatus may operate continuously before, during, and after reconfiguration from the lightweight upright mode to the above-floor cleaning mode. This may permit a user to conveniently reconfigure the apparatus to the above-floor cleaning mode to clean a surface inaccessible in the lightweight upright mode, and afterward reconfigure the apparatus to the lightweight upright mode to continue cleaning, e.g. the floor.

In some embodiments, the above-floor cleaning mode may further include dirt collection assembly **140**. For example, a user may reconfigure apparatus **100**, **152**, or **168** from the large dirt capacity upright mode (FIGS. **1**, **5**, and **13**) to the above-floor cleaning mode by disconnecting surface cleaning head **104** from wand **144**, while maintaining dirt collection assembly **140** in place on wand **144**. An

above-floor cleaning mode of this configuration may provide apparatus **100** with the reach of the above-floor cleaning mode, and the storage capacity of the large dirt capacity upright mode. In some embodiments, dirt collection assembly **140** may be a one piece assembly with the wand **144** (i.e. irremovably connected to wand **144**), in which case the wand **144** may be an up flow duct.

Referring to FIG. **22**, apparatus **100**, **152**, and **168** may be reconfigured to a handvac mode from any other mode of operation by disconnecting handvac **112** (e.g. from wand **144**). As illustrated, the handvac mode may include handvac **112** alone. In the handvac mode, upstream end **416** of nozzle **412** may provide the dirty air inlet. Optionally, one or more accessories (not shown), such as a brush, crevice tool, auxiliary wand **145** may be connected to nozzle **412**. If a wand **144** is part of dirt collection assembly **140** then an accessory wand **145** may be provided which is connectable to nozzle **412**.

The handvac mode of apparatus **100** may be lighter, smaller, and more agile than the other modes of operation. However, the handvac mode may have a smaller dirt collection capacity than the large dirt capacity upright mode (FIGS. **1**, **5**, and **13**) for example.

In some cases, a user may wish to momentarily disconnect handvac **112** for use in the handvac mode (e.g. to clean a surface that is more accessible in the handvac mode), and then return the apparatus to the previous mode. For example, apparatus **100**, **152**, or **168** may be momentarily reconfigured from the large dirt capacity upright mode (FIGS. **1**, **5**, and **13**) or from the lightweight upright mode (FIGS. **27** and **37**) to the handvac mode be merely removing the handvac and afterward reconfigured again to the upright mode.

It may be beneficial for the dirt collection chamber **188** of handvac **112** to have capacity available for use in the handvac mode upon disconnecting handvac **112** from upright section **108**. Further, it may be beneficial for dirt collection chamber **188** of handvac **112** to reclaim capacity after reconnecting handvac **112** to upright section **108**. This may be achieved by having dirt collection chamber **188** empty into assembly **140**, **160** continually while handvac **112** is attached to the assembly, manually before removal of the handvac or upon removal of the handvac. The dirt capacity may be reclaimed by having dirt collection chamber **188** empty into assembly **140**, **160** upon replacing handvac **112** to the assembly (either manually or automatically upon replacement).

An example of such a reconfiguration is discussed with respect to the embodiment of FIG. **21**, In the illustrated example, handvac dirt collection chamber **188** has a bottom wall **216** that remains open to dirt collection assembly **140** while the handvac is attached to permit dirt from handvac dirt collection chamber **188** to transfer (e.g., by gravity) to dirt collection chamber **141** thereby preventing dirt collection chamber **188** from being filled while the apparatus is used in one of the upright operating modes.

Apparatus **100** may be reconfigured from the handvac mode to the large dirt capacity upright mode by reconnecting handvac **112** to upright section **108**. Preferably, reconnecting handvac **112** to upright section **108** automatically opens handvac dirt collection chamber **188** to dirt collection chamber **141** for transferring at least a portion of the dirt, collected while in the handvac mode, to dirt collection chamber **141** thereby emptying dirt collection chamber **188** so that dirt collection chamber **188** is not full when the handvac is once again used in the handvac mode.

In some embodiments, handvac dirt collection chamber **188** does not empty into assembly **140**, **160** when attached to the assembly, manually or automatically. For example, FIGS. **25** and **26** show exemplary embodiments of apparatus **152** and **168** where assemblies **160** and **188** receive and store dirt separately at all times. As shown, upright dirt collection chamber **141** may receive and collect dirt separated by auxiliary cyclone bin assembly **160**, and handvac dirt collection chamber **188** may separately receive and collect dirt separated by handvac cyclone bin assembly **136**.

Turning now to FIGS. **123-126**, apparatus **152** is shown in accordance with another embodiment. As exemplified, handvac cyclone bin assembly **136** may include a plurality of cyclonic cleaning stages arranged in series. For example, and referring to FIGS. **125** and **126**, cyclone bin assembly **136** may include a first cyclonic cleaning stage **640** arranged in series upstream from a second cyclonic cleaning stage **644**. First cyclonic cleaning stage **640** may include one or more air outlet(s) **196***a* which discharge into air inlet(s) **192***b* of second cyclonic cleaning stage **644**.

Referring now to FIG. **127**, each cyclonic cleaning stage **640** and **644** may include one or more cyclone chambers **184** in parallel. For example, cyclonic cleaning stages **640** and **644** may each include one cyclone chamber **184**, or may each include a plurality of cyclone chambers **184**. Alternatively, one of cyclonic cleaning stages **640** and **644** may include one cyclone chamber **184** and the other stage may include a plurality of cyclone chambers **184**. In the illustrated example, first cyclonic cleaning stage **640** includes one cyclone chamber **184***a*, and second cyclonic cleaning stage **644** includes a plurality of cyclone chambers **184***b* arranged in parallel. For example, second cyclonic cleaning stage **644** may include four or more cyclone chambers **184***b* arranged in parallel.

Second stage cyclone chamber(s) **184***b* may have any suitable orientation relative to first stage cyclone chamber(s) **184***a*. For example, each of second stage cyclone chamber(s) **184***b* may have an air inlet **192***b* and an air outlet **196***b* both positioned proximate a rear end **648** of the second cyclonic cleaning stage **644** (rearward with respect to the inlet of the handvac), or both positioned proximate a front end **652** of the second cyclonic cleaning stage **644**. Alternatively, each of second stage cyclone chamber(s) **184***b* may have an air inlet **192** positioned proximate one of the front and rear ends **648** and **652**, and an air outlet **196***b* positioned proximate the other of the front and rear ends **648** and **652**. In the illustrated example, second stage cyclone chambers **184***b* are shown including air inlets **192***b* at front end **648** and air outlets at rear end **652**. This may reduce directional changes in the airflow which may reduce backpressure developed through second stage cyclone chambers **184***b* for enhanced airflow efficiency. As shown, axes **248***b* of second stage cyclone chamber **184***b* may be parallel to axis **248***a* of first stage cyclone chamber **184***a*.

Handvac cyclone bin assembly **136** may include one or more dirt collection regions **188**. For example, cyclone chambers **184** of first and second cyclonic cleaning stages **640** and **644** may separate dirt into one common dirt collection region **188**, or each cyclonic cleaning stage **640** and **644** may include a separate dirt collection region **188**. In the latter case, all first stage cyclone chamber(s) **184***a* may discharge dirt into the first stage dirt collection region **188***a*, and all second stage cyclone chamber(s) **184***b* may discharge dirt into the second stage dirt collection region **188***b*. In the illustrated embodiment, handvac cyclone bin assembly **136** includes one first stage dirt collection region **188***a*, and a plurality of second stage dirt collection regions **188***b*,

where each second sage dirt collection region **188***b* receives dirt discharged by a respective second stage cyclone chamber **184***b*.

Reference is now made to FIGS. **34-36**, which show apparatus **100**, **152**, or **168** in a stair-cleaning mode of operation. As shown, apparatus **100**, **152**, or **168** in stair-cleaning mode may include handvac **112** directly connected to surface cleaning head **104**. For example, nozzle **412** may be connected to pivot joint **116** of surface cleaning head **104**.

The stair-cleaning mode of operation may be especially suitable for cleaning stairs and the like, where frequent lifting is required to clean the desired surface areas.

Handvac Center of Gravity in the Upright Modes

In accordance with another aspect of this disclosure, which may be used by itself or in combination with any one or more other aspects of this disclosure, when the apparatus is in an upright mode and, in particular in a large dirt capacity upright mode, the center of gravity of the handvac may be located directly above the cyclone bin assembly (or dirt collection chamber) of the upright section.

As exemplified in FIGS. **21** and **25**, apparatus **100** is shown in a large dirt capacity upright mode in a storage position. In the illustrated example, handvac **112** is shown including a handvac center of gravity **524**. As shown, center of gravity **524** may be positioned vertically above dirt collection assembly **140**/cyclone bin assembly **160** between the front and rear ends **532**, **544** and **536**, **548** of dirt collection assembly **140**/cyclone bin assembly **160**. Preferably, center of gravity **524** is positioned substantially centrally between front and rear ends **532**, **544** and **536**, **548** of dirt collection assembly **140**/cyclone bin assembly and may be aligned with the wand.

Alternately, or in addition, as exemplified, center of gravity **524** is positioned between cyclone bin assembly **136** and suction motor **204**, inside premotor filter chamber **556** of handvac **112**.

Configuration of the Auxiliary Assembly

In accordance with another aspect of this disclosure, which may be used by itself or in combination with any one or more other aspects of this disclosure, a surface cleaning apparatus may have an upright section with an auxiliary dirt collection assembly **140** or auxiliary cyclone bin assembly **160** sized, shaped, and positioned according any one of a plurality of different configurations relative to the wand of the upright section and the handvac.

In some embodiments, a surface cleaning apparatus is provided having an upright mode wherein the auxiliary assembly **140**, **160** and the handvac are positioned on the same side of the wand. As exemplified in FIGS. **1**, **21**, **24**, **45**, and **46**, auxiliary assembly **140**, **160** and handvac dirt collection chamber **188** may both extend rearwardly of wand **144**. Referring to FIG. **21**, rear end **536** of dirt collection assembly **140** is shown positioned a rearward distance **564** from wand axis **568**. Bottom wall **216** of dirt collection chamber **188** is shown positioned a rearward distance **576** from wand axis **568**. Preferably, distances **564** and **576** are substantially equal. In alternative embodiments, distances **564** and **576** may be different. For example, distance **560** may be greater than distance **576**, or distance **576** may be greater than distance **564**. If rear end **536** is at an angle to the vertical as exemplified, then the handvac is preferable designed such that the rear end does not extend rearwardly past a projection of the line of rear end **536**. Accordingly, the lowest extend to which upright section **108** may be pivoted rearwardly is determined by the auxiliary assembly and not the handvac.

In some embodiments, a surface cleaning apparatus is provided having a upright mode wherein the auxiliary assembly **140**, **160** and the handvac are positioned on opposite sides of the wand. As exemplified in FIG. **26**, dirt collection assembly **140** of upright section **108** is positioned forwardly of wand **144**, and handvac dirt collection chamber **188** is positioned rearwardly of wand **144**. An advantage of this design is that the weight of the auxiliary assembly **140**, **160** is on the opposite side of wand **144** from the handvac and may assist in offsetting the hand weight of the handvac felt by a user holding the handle of the handvac.

In some embodiments, a surface cleaning apparatus is provided having a upright mode where the auxiliary assembly **140**, **160** and handvac are positioned on opposite left and right sides of the wand. For example, in apparatus **168**, cyclone bin assembly **160** may be mounted to one of the left or right sides of upright section **108**, and handvac **112** may be oriented relative to the upright section **108** such that dirt collection chamber **188** extends to the other of the left or right sides of upright section **108**.

In some embodiments, the auxiliary assembly **140**, **160** of the upright section surrounds at least a portion of the wand. Referring to FIGS. **1**, **21**, **24**, **45** and **46**, apparatus **100** is shown including an upright section **108** having dirt collection assembly **140** which partially surrounds wand **144**. In the illustrated example, dirt collection assembly **140** includes a channel **584** for receiving at least a portion of wand **144**. As shown, channel **584** may extend the height **588** of dirt collection assembly **140** between lower and upper ends **292** and **596**. Channel **584** may also extend in depth from front end **532** rearwardly toward rear end **536**.

As exemplified, dirt collection assembly **140** includes left and right portions **600** and **604** on opposite left and right sides of channel **584**. In the upright mode of apparatus **100**, wand **144** may be at least partially received in channel **584**, whereby left and right portions **600** and **604** are positioned to the left and right sides of wand **144**. As shown, a front end **532** of dirt collection assembly **140** may extend forwardly of wand **144**, such that at least a portion of wand **144** is positioned between the front and rear ends **532** and **536** of dirt collection assembly **140**.

In the illustrated embodiment, dirt collection assembly **140** may also surround at least a portion of handvac **112** in the upright mode of apparatus **100**. In the illustrated embodiment, an outlet end **608** of wand **144** may be received in channel **584** of dirt collection assembly **140**. Accordingly, a front portion of handvac **112** may extend into channel **584** for connection with outlet end **608** of wand **144**. In the illustrated embodiment, nozzle **412** and inlet passage **420** of handvac **112** may be positioned inside channel **584** of dirt collection assembly **140** in the upright mode of apparatus **100**.

Upright Section with a Plurality of Cyclones

In accordance with another aspect of this disclosure, which may be used by itself or in combination with any one or more other aspects of this disclosure, the supplemental cyclone bin assembly **160** may have a plurality of cyclones positioned in series and/or in parallel in the airflow path. The cyclones may be positioned to the same side of the upright section (e.g., front or back, left or right), or on different sides of the upright section (e.g., one front and one back or one on the right side and one on the left side). In one embodiment, the upright section may use two cyclones and the wand may be positioned between the two cyclones.

As exemplified in FIGS. **47-51**, auxiliary cyclone assembly **160** comprises first and second supplemental cyclone bin assemblies **161**, which may be individual units or may be

formed as a single unit or housing. Each cyclone bin assembly **161** is shown including a cyclone chamber **308** and a dirt collection chamber **141**. Dirt collection chambers **141** may be combined to form a common repository for dirt separated by both cyclone bin assemblies **161** or each cyclone bin assembly **161** may have a separate dirt collection chamber **141**.

Each cyclone chamber **308** may be any suitable cyclone chamber and maybe the same or different. As shown, each cyclone chamber **308** may include a tangential air inlet **344** proximate upper end **374**, and an axial air outlet **320** at a downstream end of vortex finder **400**.

Cyclone bin assemblies **161** may be positioned in parallel in the airflow path between surface cleaning head **104** and handvac **112**. As exemplified, the airflow path may extend from surface cleaning head **104** through an upstream wand portion **440**, diverge into the inlets **316** of cyclone chambers **308** through cyclone chambers **308** to their respective air outlets **320**. Each cyclone bin assembly **161** may include an outlet passage **476** connecting air outlets **320** to downstream portion **444** of wand **144** where the airflow path converges. From downstream portion **444** of wand **144**, the airflow path may extend through handvac **112** and exit out clean air outlet **132**.

As exemplified, upstream and downstream portions **440** and **444** of wand **144** may be divided by a diversion member **712**, which is described subsequently with respect to a further alternate aspect. Air traveling downstream through upstream portion **440** may contact diversion member **712** and be redirected laterally into air inlets **316** of cyclone chambers **308**. Outlet passages **476** of cyclone bin assemblies **161** may converge to form a single airflow path in downstream portion **444** of wand **144** above diversion member **712**.

Diversion Valve

In accordance with another aspect of this disclosure, which may be used by itself or in combination with any one or more other aspects of this disclosure, a diversion valve is provided which diverts air travelling through upright section **108** (e.g., the wand **144**) into the auxiliary assembly **160** (e.g., supplemental cyclone or cyclones **308**). Preferably, the diversion valve operates automatically upon the auxiliary assembly **160** being disconnected from and/or connected to the surface cleaning apparatus.

As exemplified in FIG. **20**, cyclone bin assembly **160** may be selectively connected to upright section **108** whereby the airflow path may be reconfigured to extend through cyclone bin assembly **160**. Similarly, cyclone bin assembly **160** may be selectively disconnected from upright section **108** whereby the airflow path may be reconfigured to extend through wand **144** from end to end without diversion. Preferably, the airflow path reconfiguration is automatic upon connection and/or disconnection of cyclone bin assembly **160** to upright section **108**.

In some embodiments, wand **144** may include a diversion outlet **704** and a diversion inlet **708** positioned between the upstream and downstream ends **360** and **364** of wand **144**. The diversion outlet **704** and diversion inlet **708** may be selectively opened when connecting cyclone bin assembly **160** to upright section **108** to reconfigure the airflow path to divert into the cyclone bin assembly **160** at diversion outlet **704**, and to return to the wand **144** from cyclone bin assembly **160** at diversion inlet **708**. Upright section **108** may include a diversion valve for opening and closing diversion outlet **704** and inlet **708**.

A diversion valve **712** according to a first embodiment is exemplified in FIGS. **52-57**. As exemplified, diversion valve **712** may include a sleeve **716** positioned inside of wand **144**, and a pedal **720** for moving sleeve **716** between an open position and a closed position.

Sleeve **716** may be a conduit for fluidly coupling upstream and downstream wand portions **440** and **444** in the closed position of diversion valve **712** (see FIGS. **52** and **55**) to bypass diversion outlet and inlet **704** and **708**. Preferably, sleeve **716** may be a rigid conduit. Alternatively, sleeve **716** may include flexible and/or collapsible elements. Effectively, sleeve **716** may close diversion outlet and inlet **704** and **708** in the closed position of diversion valve **712**. Optionally, diversion valve **712** may include one or more sealing members (e.g. O-rings) which may form an air-tight seal between sleeve **716** and upstream wand portion **440**, and between sleeve **716** and downstream wand portion **444** to help prevent the escape of air through diversion outlet and inlet **704** and **708** in the closed position of diversion valve **712**.

Sleeve **716** may be movable axially along wand **114** between the closed position (FIGS. **52** and **55**) and the open position (FIGS. **54** and **57**). Preferably, sleeve **716** is moved to the open position automatically by mounting cyclone bin assembly **160** to upright section **108** (e.g. connecting to wand **144**), and/or moved to the closed position automatically by dismounting cyclone bin assembly **160** from upright section **108** (e.g. disconnecting from wand **144**). In the illustrated embodiment, sleeve **716** is drivingly coupled to a pedal **720**. Pedal **720** may be depressed to move sleeve **716** from the closed position of FIGS. **52** and **55** to the open position of FIGS. **54** and **57**. As shown, pedal **720** may be positioned axially below sleeve **716** and extend outwardly of wand **144** to be depressed by cyclone bin assembly **160** when mounting cyclone bin assembly **160** to upright section **108**. Pedal **720** and sleeve **716** may be integrally molded, or separately formed and connected, to move axially up and down as a unit.

As exemplified, pedal **720** and sleeve **716** may be movably mounted to wand **144** for axial movement between the open and closed position. As shown, pedal **720** and sleeve **716** may move downwardly from the closed position (FIGS. **52** and **55**) to the open position (FIGS. **54** and **57**). In the closed position, sleeve **716** may extend the airflow path directly across the threshold between the upstream and downstream wand portions **440** and **444**. In the open position, sleeve **716** may be retracted into the upstream wand portion **440** to open diversion outlet **704** and inlet **708**, and thereby permit the airflow path to be diverted through diversion outlet **704**, cyclone bin assembly **160** and diversion inlet **708**. As shown, diversion outlet **704** may be positioned at a downstream end **724** of upstream wand portion **440**, and diversion inlet **708** may be positioned at an upstream end **728** of downstream wand portion **444**.

In an alternative embodiment, sleeve **716** may have one or more openings which align with diversion outlet and inlet **704** and **708** in the open position of valve **712**. In the closed position, the openings in sleeve **716** may be closed by alignment with solid wall portions of wand **144**, and diversion outlet and inlet **704** and **708** may be closed by alignment with solid wall portions of sleeve **716**. In this case, sleeve **716** may be positioned inside the upstream and downstream wand portions **440** and **444** in both the open and closed positions of valve **712**.

Preferably, sleeve **716** is biased to the closed position. For example, valve **712** may include a biasing member which acts on sleeve **716** to bias sleeve **716** to the closed position. In the illustrated example, valve **712** includes a spring **732** which acts on pedal **720** to urge pedal **720** and sleeve **716**

upwardly to the closed position. In alternative embodiments, sleeve **716** may not be biased to the closed position. For example, sleeve **716** may include an actuator, such as a switch or lever, which must be manually activated to move sleeve **716** to the closed position or is moved by assembly **160** when assembly **160** is removed.

Still referring to FIGS. **52-57**, cyclone bin assembly **160** may include an engagement member for mating with pedal **720** to mount cyclone bin assembly **160** on pedal **720**. In the illustrated example, a cavity **736** is formed in sidewall **376** of cyclone bin assembly **160** for receiving pedal **720**. In use, cyclone bin assembly **160** may be set onto pedal **720** such that pedal **720** is received in cavity **736**. Preferably, the weight of cyclone bin assembly **160** on pedal **720** is sufficient to overcome the bias of valve biasing member **732**, and move pedal **720** and sleeve **716** downwardly to the open position. In alternative embodiments, additional downward force must be applied by the user to move pedal **720** and sleeve **716** downwardly against the bias of the biasing member **732** and/or an actuator, such as a foot pedal, may be utilized.

Cyclone bin assembly **160** may be toed onto pedal **720** (see e.g., FIGS. **53**, **56**), and then pivoted on pedal **720** into position (see e.g., FIGS. **54**, **57**) after pedal **720** and sleeve **716** have moved downwardly to the open position. In the illustrated example, cyclone bin assembly **160** may be set onto pedal **720** with cyclone axis **392** extending at a (non-zero) angle to wand axis **740**, and then lowered with pedal **720** to move valve **712** to the open position, and finally pivoted about pedal **720** toward wand **144** to complete the connection of cyclone bin assembly **160** to wand **144**. An locking member, such as a latch **744**, which may be located at the end of the upper end or wand **144**, may be provided to secure assembly **160** in position. In some embodiments, cyclone axis **392** may be substantially parallel to wand axis **740** when cyclone bin assembly **160** is connected to wand **144**.

Cyclone bin assembly **160** may include a diversion member **428** for dividing wand **144** into upstream and downstream wand portions **440** and **444**, and for diverting flow from the upstream wand portion **440** into cyclone bin assembly inlet **316**. Diversion member **428** may take any suitable form. In the illustrated embodiment, diversion member **428** is a substantially flat plate which extends outboard of sidewall **376** for protruding into wand **144** through one of diversion outlet **704**, diversion inlet **708**, or another opening into wand **144**. Alternatively, diversion member **428** may be curved to provide a less abrupt change in airflow direction, which may reduce the pressure drop across the diversion member **428**. Optionally, diversion member **428** may include or interface with a sealing member (e.g. a deformable elastomeric seal) to form an airtight barrier between upstream and downstream wand portions **440** and **444**. Alternately, the diversion member may be a separate member that is installed as a separate step when (i.e. before, during, and/or after) connecting cyclone bin assembly **160** to the wand **144**.

As exemplified, when cyclone bin assembly **160** is mounted to wand **144**, as shown in FIGS. **54** and **57**, air inlet **316** of cyclone chamber **308** is connected to diversion outlet **704** for receiving air from upstream wand portion **440** into cyclone chamber **308**, and outlet passage **476** is connected to diversion inlet **708** for discharging air from cyclone bin assembly **160** into downstream wand portion **444**.

Cyclone bin assembly **160** may be removably mounted to wand **144** by any suitable mechanism. In the illustrated embodiment, cyclone bin assembly **160** includes a latch **744** on handle **616** for engaging a tab **746** which extends outwardly of wand **144**. Latch **744** may be user-operable by a user grasping handle **616** to release latch **744** from tab **746** for disconnecting cyclone bin assembly **160** from wand **144**. Preferably, biasing member **732** of valve **712** automatically and immediately moves sleeve **716** to the closed position upon disconnection of cyclone bin assembly **160** to reconfigure the airflow pathway by closing diversion inlet and outlet **704** and **708**.

A diversion valve **712** according to a second embodiment is exemplified in FIGS. **58-63**. Diversion valve **712** is similar to diversion valve **712** of FIGS. **52-57** in many respects except, for example that sleeve **716** is embodied by a collapsible hose **716** instead of a more rigid conduit.

As exemplified, diversion valve **712** includes a collapsible sleeve **716** positioned inside of wand **144**, and a pedal **720** for moving hose **716** been an open position and a closed position.

Sleeve **716** may be a collapsible conduit for fluidly coupling upstream and downstream wand portions **440** and **444** in the closed position of diversion valve **712** (see FIGS. **60** and **63**) to bypass diversion inlet and outlet **708** and **712**. Optionally, diversion valve **712** may include one or more seals (e.g. O-rings) which form an air-tight seal between sleeve **716** and upstream wand portion **440**, and between sleeve **716** and downstream wand portion **444** to help prevent the escape of air through diversion inlet and outlet **704** and **708** in the closed position of diversion valve **716**.

In the illustrated embodiment, sleeve **716** has a fixed-position upstream end **756** sealed to upstream wand portion **440**, and a downstream end **760** axially movable inside wand **144**. Downstream end **760** may be movable toward upstream end **756** to the open position (FIGS. **60** and **63**) whereby sleeve **716** is partially collapsed with downstream end **760** positioned in the upstream wand portion **440** upstream of diversion outlet **704**. Downstream end **760** may also be movable away from upstream end **756** to the closed position (FIGS. **58** and **61**) whereby sleeve **716** is extended with downstream end **760** position in the downstream wand portion **444** downstream of diversion inlet **708**.

As exemplified, pedal **720** may be drivingly coupled to downstream end **760** of sleeve **716**. Pedal **720** may be depressed (e.g. by the weight of cyclone bin assembly **160**) to move downstream end **760** into the upstream wand portion **440**, collapsing sleeve **716** into the open position of FIGS. **60** and **63**. Pedal **720** may also be raised (e.g. automatically by action of biasing member **732** upon release of pedal **720** or pulled upwardly by assembly **160**) to move downstream end **760** into the downstream wand portion **444**, extending sleeve **716** into the closed position of FIGS. **58** and **61**. Alternately, a manual actuator may be used.

A diversion valve **712** according to a third embodiment is exemplified in FIGS. **64-71**. As exemplified, diversion valve **712** may include a diversion outlet door **772** and a diversion inlet door **776**. Doors **772** and **776** may be opened when cyclone bin assembly **160** is connected to wand **144** for reconfiguring the airflow path to extend through cyclone bin assembly **160**. Doors **772** and **776** may also be closed when cyclone bin assembly **160** is disconnected from wand **144** for reconfiguring the airflow path to extend directly across the threshold between upstream and downstream wand portions **440** and **444**.

In the illustrated embodiment, doors **772** and **776** are pivotally mounted to wand **144** for movement between a closed position (see FIGS. **64** and **67-69**) in which doors **772** and **776** seal diversion outlet **704** and inlet **708** respectively, and an open position (see FIGS. **66** and **71**) in which doors

772 and 776 are open to allow air to flow through doors 772 and 776 between wand 144 and cyclone bin assembly 160. Doors 772 and 776 may be pivotally mounted to wand 144 in any suitable manner. In the example shown, doors 772 and 776 are pivotally mounted to wand 144 by a common hinge 780. As shown, door 772 may pivot inwardly about hinge 780 toward a downstream direction, and door 776 may pivot inwardly about hinge 780 toward an upstream direction. In alternative embodiments, each of doors 772 and 776 may be pivotally mounted to wand 144 by a different hinge.

Preferably, doors 772 and 776 open automatically by connecting cyclone bin assembly 160 to wand 144. In the illustrated example, cyclone bin assembly 160 includes an inlet nose 784 for pushing open diversion outlet door 772, and an outlet nose 788 for pushing open diversion inlet door 776. As shown, noses 784 and 788 may extend outwardly of sidewall 376 for projecting through diversion outlet and inlet 704 and 708 respectively upon connecting cyclone bin assembly 160 to wand 144.

Preferably, when cyclone bin assembly 160 is connected to wand 144, an airflow path is formed between diversion outlet 704 and air inlet 316, and between diversion inlet 708 and air outlet 320, such that the airflow path from upstream wand portion 440 to downstream wand portion 444 is reconfigured to extend through cyclone bin assembly 160. In the illustrated example, connecting cyclone bin assembly 160 to wand 144 may include pushing noses 784 and 788 into diversion outlet and inlet 704 and 708 respectively to open doors 772 and 776.

Noses 784 and 788 may take any suitable form. As exemplified, nose 784 may be formed as a diversion member including an inlet passage having an upstream end 792 and a downstream end 796. Upstream end 792 may extend into wand 144 and form a seal with upstream wand portion 440 to redirect the airflow in upstream wand portion 440 to enter nose 784 toward downstream end 796. In the illustrated embodiment, upstream wand portion 440 includes a sealing ring 800 adjacent an upstream side 804 of diversion outlet door 772 onto which downstream end 796 may be seated for forming an airtight seal between upstream wand portion 440 and downstream end 796. Alternatively, or in addition, upstream side 804 may include a sealing member. Downstream end 796 of nose 784 may be integrally formed or otherwise connected with air inlet 316.

In the illustrated example, nose 788 is formed as a triangular plate which projects outwardly from air outlet 320. In other embodiments, nose 788 may have another suitable form for pushing diversion inlet door 776, such as a circular or rectangular plate or a rod for example. As shown, when cyclone bin assembly 160 is connected to wand 144, nose 788 projects into diversion inlet 708 pushing open diversion inlet door 776. This may permit air outlet 320 to sealingly abut diversion inlet 708 for forming an airflow path between air outlet 320 and downstream wand portion 444. Optionally, a seal 808 may be provided at the interface between air outlet 320 and diversion inlet 708 for enhancing the airtightness of the connection.

It will be appreciated that in alternative embodiments, nose 788 may be formed as an outlet passage, which may be curved similar to nose 784. This may make the change in airflow direction across nose 788 less abrupt, which may reduce pressure losses.

Preferably, when cyclone bin assembly 160 is disconnected from wand 144, doors 772 and 776 automatically close to reconfigure the airflow passage to extend directly from upstream wand portion 440 to downstream wand portion 444 without diversion through diversion outlet 704 or inlet 708. For example, doors 772 and 776 may be biased to the closed position by a biasing member, such as a spring. In the illustrated embodiment, diversion valve 712 includes a torsional spring 812. Spring 812 may be positioned to bias both of doors 772 and 776 to the closed position. In the illustrated embodiment, spring 812 is held in a spring housing 816 mounted to an inside face 820 of diversion outlet door 772. As shown, spring 812 may have an arm 824 connected to diversion inlet door 776, effectively biasing doors 772 and 776 away from each other to their respective closed positions. In alternative embodiments, each of doors 772 and 776 may have a separate biasing member.

A diversion valve 712 according to a fourth embodiment is exemplified in FIGS. 72-77. Diversion valve 712 is similar to diversion valve 712 of FIGS. 64-71 in many respects except, for example, the door which selectively closes diversion outlet 704 and inlet 708.

In the illustrated embodiment, diversion valve 712 includes a door 772. Door 772 may be movable between a closed position (FIGS. 72 and 75) in which door 772 seals diversion outlet 704 and inlet 708, and an open position (FIGS. 74 and 77) in which door 772 is unsealed from outlet 704 and inlet 708 to allow the airflow to pass through diversion outlet 704 and inlet 708. As exemplified, diversion valve 712 may include one door 772 for closing both of diversion outlet 704 and inlet 708, or separate doors 772 for diversion outlet 704 and inlet 708.

As shown, door 772 may be pivotally mounted to wand 144 in any suitable manner for movement between the open and closed positions. For example, door 772 may be pivotally mounted outside of wand 144 by a hinge 780. In the illustrated example, door 772 may pivot outwardly about hinge 780 away from wand 144 to the open position, and may pivot inwardly about hinge 780 toward wand 144 to the closed position. Preferably, door 772 is manually openable, whereby a user may grasp door 772 and manually move door 772 from the closed position to the open position. For example, door 772 may have a lever 840, a handle, or another gripping member for a user to grasp for manipulating the position of door 772.

Once door 772 is opened, as shown in FIGS. 73 and 76, cyclone bin assembly 160 may be connected to wand 144. In the illustrated embodiment, cyclone bin assembly 160 includes a diversion member 428 of the type describe above with reference to FIGS. 52-57. Diversion member 428 may be moved into wand 144 through diversion outlet 704, diversion inlet 708, or another opening in wand 144, for dividing wand 144 into an upstream portion 440 and a downstream portion 444, substantially as described above.

When cyclone bin assembly 160 is disconnected from wand 144, door 772 may be moved back into the closed position for reconfiguring the airflow path in wand 144 to extend directly from upstream portion 440 to downstream portion 444 without diversion. For example, door 772 may be manually moved from the open position to the closed position by hand, or door 772 may move automatically to the closed position by the bias of a biasing member (e.g. a spring).

In some embodiments, door 772 may be held in the closed position by the bias of a biasing member, or by a releasable locking mechanism (e.g. a latch). This may permit door 772 to form a tight seal against diversion outlet 704 and inlet 708.

In some embodiments, pedal 720 may be foot operable and may be located close to or on the surface cleaning head.

Angular Surface of Upright Section

In accordance with another aspect of this disclosure, which may be used by itself or in combination with any one or more other aspects of this disclosure, a surface cleaning apparatus is provided having an upright section with a dirt collection chamber or cyclone bin assembly having a side profile that tapers or narrows from top to bottom. For example, the rear wall of the supplemental dirt collection chamber or supplemental cyclone bin assembly may extend upwardly at an acute angle relative to the wand axis such that the rear wall is farther from the wand axis at the top end than at the bottom end of the dirt collection chamber or cyclone bin assembly. An advantage of this design is that the surface cleaning apparatus may extend under furniture while providing a large dirt collection capacity.

As exemplified in FIGS. **3** and **7**, surface cleaning apparatus **100** and **152** include an upright section **108** having a dirt collection chamber **140** or cyclone bin assembly **160** that extends from a lower end **292**, **856** proximate surface cleaning head **104** to an upper end **596**, **860**. A rear end **536**, **548** of auxiliary assembly **140/160** may extend upwardly from lower end **292** or **856** at a (non-zero) acute angle **848** to wand axis **568**. Angle **848** is preferably between 10 and 70 degrees, and more preferably between 20 and 40 degrees. For example, a distance **538** between wand axis **568** and rear end **536**, **548**, measured normal to wand axis **568**, may increase continually or generally continuously from lower end **292**, **856** upwardly. As shown, distance **538** is greater at upper end **596**. **860** than at lower end **292**, r **856**.

Handvac with Angled Bottom Wall

In accordance with another aspect of this disclosure, which may be used by itself or in combination with any one or more other aspects of this disclosure, a handvac may be provided having a bottom, such as a flat bottom wall, for supporting the handvac on a horizontal surface, and which extends at an acute angle (e.g., between 20 and 40 degrees) away from the inlet nozzle axis, and optionally at about the in-use orientation of the hand vac. This may provide the handvac with a resting orientation that is closer to or essentially at the in-use orientation of the handvac. For example, the in-use orientation of the handvac may normally have the inlet nozzle axis extending at a downward angle relative to a horizontal surface to be cleaned. Thus, a user may not have to substantially reorient the handvac upon grasping the handvac in the resting orientation to reposition the handvac into the in-use orientation.

Reference is now made FIG. **78**, where handvac **112** is shown resting on a horizontal surface **876**. As shown, nozzle axis **884** extends at an angle **880** to horizontal surface **876**. Angle **880** may be an acute angle which may be between 10 and 80 degrees, and preferably between 25 and 65 degrees, more preferably between 35 and 55 degrees or between 20 and 40 degrees. It will be appreciated that handvac **112** may be stably supported in any suitable manner, with nozzle axis **884** extending at angle **880** to horizontal surface **876**. For example, handvac **112** may include one or more support elements (e.g. a wall or feet) which collectively provide a support for handvac **112** on a horizontal planar surface at a desired acute angle, and a center of gravity **524** vertically aligned with or between the support elements for stability when handvac **112** is so supported by the support element(s) on the horizontal surface.

As exemplified, bottom wall **216** of handvac **112** may extend at an angle **880** to inlet nozzle axis **884** of nozzle **412**. Bottom wall **216** may be planar, and the plane of bottom wall **216** may intersect with nozzle axis **884** at angle **880**. Bottom wall **216** may provide a flat planar surface for making broad contiguous contact with horizontal surface **876**, or bottom wall **216** may include a plurality of discrete contact points or surfaces which collectively contact the horizontal surface **876** to support the handvac **112** (e.g. as in the feet of a tripod, or the wheels of a car). Preferably, handvac center of gravity **524** is preferably aligned vertically above bottom wall **216** when handvac **112** is supported on horizontal surface **876** by bottom wall **216**. This may permit handvac **112** to rest stably (i.e. statically without tipping over) on horizontal surface **876** while supported solely by bottom wall **216**.

Handvac **112** may have an in-use orientation relative to horizontal surface **876** at which a user may comfortably operate handvac **112** during cleaning. Typically, handvac **112** is most comfortably operated in an orientation that does not require an application of torque by the user's hands when the handvac **112** is held by handle **484**. This may be the case where the center of gravity **524** of the handvac **112** is aligned vertically below the user's hand. Accordingly, the center of gravity **524** may be vertically aligned below handle **484** in comfortable in-use orientations of handvac **112**.

Preferably, center of gravity **524** is aligned vertically below handle **484** when handvac **112** is supported on horizontal surface **876**. In the illustrated embodiment, center of gravity **524** is aligned vertically below handle **484** when bottom wall **216** is horizontal and supporting handvac **112** on a horizontal surface **876**. Thus, the resting orientation of handvac **112** supported by bottom wall **216** on a horizontal surface **876** may be substantially the same as the in-use orientation of handvac **112**. Accordingly, when a user grasps handvac **112** by handle **484** and lifts handvac **112**, handvac **112** may already be in a balanced in-use position with the center of gravity **524** aligned below the user's hands.

In many cases, handvac **112** may be stored on a surface below a user's elbows. A user may angle their forearm downwardly to grasp handle **484** of handvac **112**. In this case, the user's fingers and palm may be naturally aligned for grasping a handle which is angled forwardly of vertical. For example, to grasp a vertically oriented handle that is positioned below a user's elbow, a user may need to contort their wrist to conform to the orientation of the handle.

In the illustrated embodiment, handle axis **888** of handle **484** extends at a (non-zero) forward angle **892** to the vertical (e.g., e.g. when bottom wall **216** is horizontal). This may provide a comfortable handle alignment for grasping by a user when picking up handvac **112**, and when using handvac **112** for cleaning surfaces below the user's elbows. Preferably, angle **892** is an acute angle of between 10 and 80 degrees, more preferably between 20 and 70 degrees and most preferably between 30 and 60 degrees.

Bottom wall **216** may be a wall of any component of handvac **112**. In the illustrated embodiment, bottom wall **216** is a wall of cyclone bin assembly **136**. Preferably, bottom wall **216** is a wall of dirt collection chamber **188**. In the example shown, bottom wall **216** is an openable wall of dirt collection chamber **188**. FIG. **79** shows another embodiment of handvac **112** where bottom wall **216** is not openable.

Referring to FIG. **78**, bottom wall **216** of handvac **112** may include front wheels, rear wheels, or both. Wheels may provide rolling support for handvac **112** when cleaning under furniture, for example. In alternative embodiments, handvac **112** may not include wheels on bottom wall **216** as shown.

Handle Position

In accordance with another aspect of this disclosure, which may be used by itself or in combination with any one or more other aspects of this disclosure, a floor cleaning apparatus is provided having a handvac with a handle, and

an upright section with a cyclone bin assembly or dirt collection chamber with a handle. Preferably, the handles are centrally aligned with a plane of symmetry of the apparatus. This may permit the handles to be grasped for a balanced control of the apparatus. For example, the handles may be parallel to the same plane of symmetry.

Alternately, as exemplified in FIG. **2**, one handle may be parallel to a plane of symmetry and the other transverse thereto but positioned such that the plane of symmetry extends through the transversely oriented handle. In the illustrated example, handvac **112** includes a handle **484** which extends along a handle axis **888**. As exemplified, handle axis **888** may lie in a vertical plane **1044**, which is aligned centrally between left and right sides of apparatus **100** (i.e., a plane of symmetry). Turning to FIG. **78**, handle **484** is shown extending in length between a first handle end **1048** at the upper end **1052** of handvac **112**, and a second handle end **1056** intermediate the upper and lower ends **1052** and **1060** of handvac **112**.

Returning to FIG. **2**, assembly **140** is shown including a handle **1064**. As illustrated, handle **1064** may have a handle axis **1068** which extends perpendicularly or transverse to plane **1044** and handle axis **888**. Handle **1064** may be formed in a rear end **536** of assembly **140**. For example, handle **1064** may be flush with rear end **536** and include a concave finger cavity **1072** to facilitate grasping handle **1064**. Preferably, handle **1064** is positioned laterally centrally such that plane **1044** intersects handle **1064**, and optionally bisects handle **1064** at a midpoint between handle ends **1076** and **1080**.

Handles **484** and **1064** may be positioned on opposite sides of surface cleaning apparatus **100**. For example, handle **484** is shown extending from an upper end **1052** proximate the front surface of apparatus **100**, and handle **1064** is shown extending flush with a rear surface of apparatus **100**.

Apparatus **100** may include one or more actuator controls (e.g. buttons, levers, or switches) for controlling various functionality such as opening or disconnected elements, or connecting power to elements. Preferably, at least some of the actuator controls are positioned on or within finger reach of a handle to permit the control to be activated while grasping the handle. This may permit single handed operation of the function provided by the control.

Referring to FIG. **1**, apparatus **100** is shown including a power switch **1084** located on upper end **1052** of handvac **112** proximate first handle end **1048** within finger-reach when grasping handvac handle **484**. As illustrated, power switch **1084** may be laterally centrally positioned such that plane **1044** intersects and more preferably bisects power switch **1084**.

Referring now to FIGS. **15** and **16**, apparatus **168** is shown including an upright section **108** having a cyclone bin assembly **160** with a handle **616**, and handvac **112** with handle **484**. As shown, handle axis **1092** of handle **616**, and handle axis **888** of handvac handle **484** may extend in a same plane **1096**. Preferably, plane **1096** is a vertical plane positioned laterally centrally between left and right sides of apparatus **168** as shown. In the illustrated embodiment, plane **1096** bisects handles **616** and **484**.

In the illustrated embodiment, handvac **112** includes a power switch **1084** located on upper end **1052** of handvac **112** which is bisected by plane **1044**. Handle **616** of cyclone bin assembly **160** is also shown including a button **1100** for releasing latch **744** to disconnect cyclone bin assembly **160** from wand **144**. As illustrated, button **1100** may be positioned laterally centrally between left and right sides of apparatus **168** such that button **1100** is bisected by plane **1096**.

Handvac Axial Alignment

In accordance with another aspect of this disclosure, which may be used by itself or in combination with any one or more other aspects of this disclosure, a plurality of airflow path segments in the handvac may extend in parallel. In some cases, this may reduce the number of bends in the airflow path through the handvac, which may reduce the pressure drop across the airflow path.

As exemplified in FIG. **96**, handvac inlet nozzle **412** may extend in length from an upstream nozzle end **416** rearwardly along a nozzle axis **884**, handvac cyclone chamber **184** may extend from an air inlet **192** along a cyclone axis **248** to an air outlet **196**, and handvac suction motor **204** may extend from a motor inlet **1108** along a motor axis **252** to a motor outlet **1112**.

In some embodiments, two or more of nozzle axis **884**, cyclone axis **248**, and motor axis **252** may be parallel. For example, in the illustrated embodiment, nozzle axis **884**, cyclone axis **248**, and motor axis **252** are parallel. In some embodiments, two or more of nozzle axis **884**, cyclone axis **248**, and motor axis **252** may be co-axial. For example, in the illustrated embodiment, nozzle axis **884** and cyclone axis **248** are co-axial. In other embodiments, nozzle axis **884**, cyclone axis **248**, and motor axis **252** may all be co-axial.

In the illustrated embodiment, handvac **112** may include an electrical connector **1116** for providing power to an upstream attachment (e.g. a surface cleaning head). As shown, connector **1116** may extend from a front connector end **1120** along a connector axis **1124** to a rear connector end **1128**. In some embodiments, connector axis **1124** may be parallel to one or more of nozzle axis **884**, cyclone axis **248**, and motor axis **252**. In the illustrated embodiment, connector axis **1124** is parallel to nozzle axis **884**, cyclone axis **248**, and motor axis **252**.

In some embodiments, handvac **112** may include one or more electrical cables **1132** which extend from electrical connector **1116** rearwardly to electrically couple electrical connector **1116** with a source of power (not shown). In the illustrated embodiment, electrical cables **1132** extend from electrical connector **1116** rearwardly along vortex finder **1136** of cyclone chamber **184** toward motor housing **1138**. As shown, at least the portion of electrical cables **1132** which along vortex finder **1136** across cyclone chamber **184** is parallel to cyclone axis **248**.

Axial Cyclone Inlet

In accordance with another aspect of this disclosure, which may be used by itself or in combination with any one or more other aspects of this disclosure, a handvac may be provided having a cyclone chamber with an axial inlet. That is, the inlet axis may be parallel to the cyclone axis, and more preferably co-axial with the cyclone axis. In some cases, this may reduce the bends in the airflow path through the cyclone, which may reduce the pressure drop across the cyclone for better pneumatic efficiency. Preferably, the cyclone is a uniflow cyclone wherein the air outlet is at the opposite end from the air inlet. Alternately, or in addition, the axial inlet includes a portion that converts the axial flow to a tangential flow wherein the portion is provided within the diameter of the cyclone chamber. Optionally, the axial inlet is parallel to and may be co-axial with the handvac air inlet.

As exemplified in FIG. **96**, handvac cyclone chamber **184** includes an air inlet **192** and an air outlet **196**. As shown, air inlet **192** may include an inlet axis **1140** which is parallel to

cyclone axis **248**. Air inlet **192** may have a circular section transverse to axis **1140** with an inlet diameter **1144**, or rectangular with a side dimension **1144**. Preferably, the cross-sectional area of air inlet **192** is approximately equal to the cross-sectional area of inlet nozzle **412**. Preferably, the cross-sectional area of air inlet **192** is between 80%-125% of the cross-sectional area of the inlet nozzle **412**, more preferably 90%-120%, and most preferably 100%-115%.

Preferably, inlet **192** is in fluid communication with an upstream end **388** of an inlet passage **384**. Inlet passage **384** may redirect the axial flow through inlet **192** to a tangential flow for developing a cyclonic motion inside cyclone chamber **184**. Referring to FIGS. **23** and **23***a*, inlet passage **384** may extend from upstream passage end **388** to downstream passage end **396** across an arcuate angular extent **1148**. Preferably angular extent **1148** is between 45 and 300°, more preferably between 60 and 250°, and most preferably between 90 and 200°.

Returning to FIG. **96**, inlet passage **384** is shown having a width **1152**, and a height **1108**. In some embodiments, the cross-sectional area of inlet passage **384** may be approximately equal to the cross-sectional area of air inlet **192**. Preferably, the cross-sectional area of inlet passage **384** is between 80%-125% of the cross-sectional area of the inlet passage **384**, more preferably 90%-120%, and most preferably 100%-115%.

Vortex finder **1136** may define an outlet passage to air outlet **196** of cyclone chamber **184**. As shown, vortex finder **1136** may be substantially cylindrical having a diameter **1160**. In the illustrated embodiment, the cross-sectional area of vortex finder **1136** may be approximately equal to the cross-sectional area of inlet nozzle **412**. For example, diameter **1160** may be approximately equal to diameter **1164** of inlet nozzle **412**. Preferably, the cross-sectional area of vortex finder **1136** is between 80%-125% of the cross-sectional area of the inlet nozzle **412**, more preferably 90%-120%, and most preferably 100%-115%.

Uniflow Cyclone

In accordance with another aspect of this disclosure, which may be used by itself or in combination with any one or more other aspects of this disclosure, a handvac may be provided having a cyclone chamber wherein the air outlet is at the opposite end from the air inlet. In some cases, this may reduce the bends in the airflow path through the cyclone, which may reduce the pressure drop across the cyclone for better pneumatic efficiency. Optionally, the cyclone inlet is at the front or inlet end of the handvac and may be parallel to or co-axial with the handvac air inlet.

As exemplified in FIG. **96**, handvac inlet **192** is shown positioned at a front end **220** of cyclone chamber **184**, and outlet **196** is shown positioned at a rear end **224** of cyclone chamber **184**. Inlet **192** may have an inlet axis **1140** that is parallel to the outlet axis **1168** of air outlet **196**. In the illustrated embodiment, inlet axis **1140** is co-axial with outlet axis **1168**.

Optionally, the suction motor axis may be parallel to or co-axial with axis **1140**, **1168**. Accordingly, air may travel in a generally uniform direction through the components of the handvac.

Handvac Cyclone Dirt Collection Chamber

In accordance with another aspect of this disclosure, which may be used by itself or in combination with any one or more other aspects of this disclosure, the dirt collection chamber of the handvac may have a dirt inlet which is located at the upper end of the dirt collection chamber when the hand vac is oriented for cleaning a floor (see e.g., FIGS. **81** and **103**). In addition, the dirt collection chamber may be shaped to encourage dirt to collect at another end of the handvac away from the dirt outlet of the cyclone chamber (e.g., it may extend downwardly away from the dirt inlet). This may clear the dirt inlet to permit additional dirt to enter.

As exemplified in FIG. **96**, dirt may enter dirt collection chamber **188** from cyclone chamber **184** through dirt outlet **200** of cyclone chamber **184**. In the illustrated embodiment, dirt outlet **200** is at a rear end **224** of cyclone chamber **184**. In use, handvac **112** may be normally oriented with the nozzle **412** at the front end oriented downwardly for cleaning a surface below. Accordingly, dirt entering dirt collection chamber **188** from dirt outlet **200** may fall by gravity toward front end **220** of dirt collection chamber **188** away from dirt outlet **200**. This may help to keep dirt outlet **200** clear for subsequent dirt to move through dirt outlet **200** during use.

In the illustrated embodiment, handvac **112** may be supportable on a horizontal surface **876** by contact between dirt collection chamber **188** and the horizontal surface **876**. For example, dirt collection chamber **188** may include a bottom wall **216** for supporting handvac **112** on horizontal surface **876**. Preferably, as discussed previously, handvac **112** is inclined with nozzle **412** facing downwardly when handvac **112** is supported on horizontal surface **876** by bottom wall **216**. In the illustrated embodiment, bottom wall **216** is angled downwardly between front end **220** and rear end **224** for orienting nozzle axis **884** downwardly to horizontal when handvac **112** is supported on horizontal surface **876**. As shown, this may provide dirt collection chamber **188** with a wedge-like shape having a height **1172** measured between upper and lower dirt collection chamber walls **226** and **216** which increases from the front end **220** to the rear end **224**.

Pre-Motor Filter Housing

In accordance with another aspect of this disclosure, which may be used by itself or in combination with any one or more other aspects of this disclosure, a pre-motor filter housing may be provided in the airflow path between the cyclone bin assembly and the suction motor for directing the airflow through one or more pre-motor filters contained therein.

As exemplified in FIGS. **96** and **117**, handvac **112** has a pre-motor filter chamber **556** containing pre-motor filters **1176** and **1180**, and a suction motor housing **1138** containing suction motor **204**. The airflow path from inlet nozzle **412** to clean air outlet **132** may extend downstream from cyclone bin assembly **136** to pre-motor filter chamber **556** to suction motor housing **1138**. That is, cyclone bin assembly **136**, pre-motor filter chamber **556**, and suction motor housing **1138** may be positioned in the airflow path with pre-motor filter chamber **556** downstream of cyclone bin assembly **136** and suction motor housing **1138** downstream of pre-motor filter chamber **556**.

In the illustrated example, pre-motor filter chamber **556** extends in height **1184** between an upper end **1188** to a lower end **1192** in the direction of pre-motor filter axis **560**, and extends in depth **1216** between front wall **1220** and rear wall **1224**. In some embodiments, cyclone axis **248** and motor axis **252** may be parallel and vertically offset as shown. For example, each of cyclone axis **248** and motor axis **252** may intersect pre-motor filter chamber **556** as shown. In some embodiments, outlet axis **1168** of cyclone chamber outlet **196** and, motor inlet axis **1196** of motor inlet **1108** may be parallel and vertically offset. For example, each of outlet axis **1168** and motor inlet axis **1196** may intersect pre-motor filter chamber **556** as shown.

In some embodiments, cyclone chamber outlet **196** discharges air from cyclone chamber **184** into pre-motor filter

chamber **556**, and pre-motor filter chamber **556** discharges air into motor inlet **1108**. For example, cyclone chamber outlet **196** may be positioned at the threshold between cyclone chamber **184** and pre-motor filter chamber **556**, and motor inlet **1108** may be positioned at the threshold between pre-motor filter chamber **556** and suction motor housing **1138**. In alternative embodiments, one or more conduits (not shown) may separate pre-motor filter chamber **556** from cyclone chamber outlet **196** and/or motor inlet **1108**.

In the illustrated embodiment, pre-motor filter chamber **556** extends in length between a front end **1200** and a rear end **1204**. As shown, pre-motor filter chamber **556** may hold pre-motor filters **1176** and **1180** in the airflow path between cyclone chamber outlet **196** and motor inlet **1108** for filtering residual dirt particles remaining in the airflow. In some embodiments, pre-motor filter chamber **556** may hold pre-motor filters **1176** and **1180** in spaced apart relation to front and rear ends **1200** and **1204**. An upstream plenum **1208** may be provided in the space between upstream pre-motor filter **1176** and front end **1200**. A downstream plenum **1212** may be provided in the space between downstream pre-motor filter **1176** and rear end **1204**. Air entering upstream plenum **1208** from cyclone bin assembly **136** may distribute across the surface area of pre-motor filter **1176** for traversing filters **1176** and **1180** to downstream plenum **1212**.

In the illustrated embodiment, cyclone chamber outlet **196** may direct air into an upper portion of upstream plenum **1208**. For example, cyclone chamber outlet **196** may be connected to pre-motor filter chamber **556** proximate upper end **1188**. In the illustrated embodiment, motor inlet **1108** may receive air from a lower portion of downstream plenum **1212**. For example, motor inlet **1108** may be connected to pre-motor filter chamber **556** proximate lower end **1192**. Accordingly, pre-motor filter chamber **556** may be used to redirect the air from transversely to the cyclone and motor axis without requiring conduits having bends therein.

Battery Power

In accordance with another aspect of this disclosure, which may be used by itself or in combination with any one or more other aspects of this disclosure, the surface cleaning head or upright section of the surface cleaning apparatus may include one or more batteries for powering the handvac when the handvac is connected to the surface cleaning head or upright section. The handvac may also include handvac batteries which may power the handvac when connected to or disconnected from the upright section and surface cleaning head (e.g. in an above-floor cleaning mode or handvac mode). When the handvac is electrically connected to the surface cleaning head, the batteries in the surface cleaning head may supplement the batteries in the handvac or be the sole power source.

As exemplified in FIG. **3**, surface cleaning apparatus **100** (or any other surface cleaning apparatus embodiment disclosed herein) may include one or more handvac batteries **1268** mounted to the handvac **112**, and one more supplemental batteries **1272**. Supplemental batteries **1272** may be mounted to any other suitable component of apparatus **100** other than handvac **112**. For example, supplemental batteries **1272** are shown mounted to surface cleaning head **104**. Alternatively or additionally, supplemental batteries **1272** may be mounted to upright section **108**.

As used herein, the plural term "batteries" means one or more batteries. For example, supplemental batteries **1272** may be one battery or a plurality of batteries. Similarly, handvac batteries **1268** may be one battery or a plurality of batteries. Batteries **1272** and **1268** may be any suitable form of battery such as NiCad, NiMH, or lithium batteries, for example. Preferably, batteries **1272** and **1268** are rechargeable, however, in alternative embodiments, one or both of batteries **1272** and **1268** may be non-rechargeable single-use batteries.

In the illustrated embodiment, when handvac **112** is connected to upright section **108**, an electrical connection may be formed between supplemental batteries **1272** and handvac **112**, e.g. for powering suction motor **204**.

In some embodiments, supplemental batteries **1272** may provide handvac **112** with enhanced power for generating greater suction with suction motor **204**. For example, suction motor **204** may operate in a high power consumption mode, drawing power from supplemental batteries **1272**, or supplemental batteries **1272** and handvac batteries **1268** simultaneously.

In some embodiments, supplemental batteries **1272** may provide the handvac **112** with extra energy for prolonged cleaning time between charges. For example, supplemental batteries **1272** may have a greater energy capacity (e.g. measured in Watt-hours) than handvac batteries **1268**, such that handvac **112** may be sustained by supplemental batteries **1272** for a longer operating time. In some embodiments, handvac **112** may draw power from both of supplemental batteries **1272** and handvac batteries **1268**, which have a greater combined energy storage capacity than handvac batteries **1268** alone.

In some embodiments, supplemental batteries **1272** may supply power to the handvac in preference to the handvac batteries **1268** to delay or avoid draining the handvac batteries **1268**. For example, handvac **112** may draw power from supplemental batteries **1272** until substantially depleted before drawing power from handvac batteries **1268**. This may conserve power in handvac batteries **1268** for use when handvac **112** is disconnected from supplemental batteries **1272** (e.g. in an above-floor cleaning mode, or handvac mode of apparatus **100**). In some embodiments, handvac **112** may never draw power from handvac batteries **1268** when handvac **112** is electrically connected to supplemental batteries **1272**.

In some embodiments, handvac **112** may draw power from supplemental batteries **1272** to recharge handvac batteries **1268**. This may help to ensure that handvac batteries **1268** are not depleted when handvac **112** is disconnected from supplemental batteries **1272** (e.g. for use in an above-floor cleaning mode, or handvac mode of apparatus **100**). In some cases, supplemental batteries **1272** may recharge handvac batteries **1268** only when apparatus **100** is not turned on.

In some embodiments, supplemental batteries **1272** may be recharged whenever the surface cleaning apparatus is connected to an external power outlet. In some cases, handvac batteries **1268** may be recharged when handvac **112** is electrically connected to an external power outlet (e.g. when surface cleaning head **104** or upright section **108** is connected to a power outlet by an electrical cord (not shown), and handvac **112** is connected to the surface cleaning head **104** or upright section **108**).

In some embodiments, one or more of supplemental batteries **1272** and handvac batteries **1268** may be positioned in the airflow path. This may provide cooling for the batteries so positioned, which may help to prevent the batteries from overheating and may improve the performance of the batteries. In the illustrated example, handvac batteries **1268** are positioned in the airflow path inside motor housing **1138**. For example, handvac batteries **1268** may be positioned inside motor housing **1138** between suction

motor **204** and clean air outlet **132**. The air passing over the handvac batteries **1268** may help to keep the batteries **1268** cool.

Supplemental batteries **1272** may be positioned in the airflow path to promote cooling of the batteries **1272**. In the illustrated example, supplemental batteries **1272** are shown positioned inside surface cleaning head **104** in the airflow path between dirty air inlet **124** and downstream end **1240**. The air passing over batteries **1272** may help to keep batteries **1272** cool.

In alternative embodiments, one or both of supplemental batteries **1272** and handvac batteries **1268** may be positioned outside of the airflow path (e.g. to be cooled passively).

Handvac Wheels

In accordance with another aspect of this disclosure, which may be used by itself or in combination with any one or more other aspects of this disclosure, the handvac may be provided with one or more sets of wheels, and a handle which may articulate to facilitate different cleaning postures.

As exemplified in FIGS. **106-109**, surface cleaning apparatus **1292** may include a surface cleaning head **104**, an upright section **108** (which may receive any assembly **140**, **160** discussed previously), and a handvac **112**. An airflow path through apparatus **1292** may extend from dirty air inlet **124** in surface cleaning head **104**, downstream through upright section **108** and then handvac **112** to clean air outlet **1304**. Upright section **108** may include a wand **144** having an upstream end **360** drivingly connected to a pivot joint **116** of surface cleaning head **104**, and a downstream end **364** connected to an inlet nozzle **412** of handvac **112**.

Handvac **112** may include an air treatment member positioned in the airflow path between inlet nozzle **412** for separating dirt from the airflow. In the illustrated example, handvac **112** includes a cyclone bin assembly **136** including a cyclone chamber **184**, and a dirt collection chamber **188**. Optionally, a bottom wall **216** of dirt collection chamber **188** may be pivotally openable for emptying dirt collection chamber **188**.

As exemplified, apparatus **1292** may be movable between an upright storage position (FIG. **106**) in which handvac **112** is substantially vertically aligned above surface cleaning head **104** and wand **144** is substantially vertically oriented, and an in-use floor cleaning position (FIG. **108**) in which surface cleaning head **104** is positioned behind surface cleaning head **104** and wand **144** extends at an angle to vertical.

In the illustrated example, apparatus **1292** may include a handle **1340**. Handle **1340** may be connected to wand **144** by an arm assembly **1344**. As shown, arm assembly **1344** may include a first arm **1348** joined to a second arm **1352** by an articulating joint **1356**. First arm **1348** may be connected to wand **144** and joint **1356**, and second arm **1352** may be connected to handle **1340**. Alternately, joint **1356** may be used to connect second arm **1352** to wand **144**.

As shown, first arm **1348** may be rigidly connected to wand **144**, and extend transversely to wand **144**. For example, first arm **1348** may extend perpendicularly to wand **144**. Second arm **1352** may be rotatable about joint **1356** between at least two positions. In the first position (FIG. **108**), second arm **1352** may extend at an angle to first arm **1348** substantially in parallel with wand **144**. In the second position (FIG. **109**), second arm **1352** may extend substantially parallel to first arm **1348**. An actuator (e.g., a button) **1358** may be provided on handle **1340** for toggle joint **1356** between an unlocked position in which second arm **1352** can move with respect to first arm **1348**, and a locked position in which the position of second arm **1352** is fixed with respect to first arm **1348**. Optionally, joint **1356** may be locked in a number of alternate positions. Alternately, joint **1356** may not be locked in the second bent position shown in FIG. **109**.

The first position (FIG. **108**) may be suitable for cleaning open areas where vertical clearance is not an issue. The second position (FIG. **109**) may be suitable for cleaning under furniture and the like, where wand **144** must be lowered to clear the furniture height. In the second position, the orientation of second arm **1352** may permit a user to grasp handle **1340** and lower wand **144** while conveniently standing upright.

In some embodiments, handvac **112** may include one or more front wheels **1364**. Front wheel **1364** may be positioned to make rolling contact with a horizontal surface when wand **144** is lowered sufficiently. Thus, front wheel **1364** may assist with supporting the weight of handvac **112** and permit handvac **112** to roll across the horizontal surface. In the illustrated example, a front end **1360** of bottom wall **216** is provided with one or more front wheels **1364**.

It will be appreciated that if rear end of assembly **140**,**160** is tapered as discussed previously, then assembly **140**, **160** is configured to permit the vacuum cleaner to extend further under furniture than if the assembly **140**,**160** had the depth (front to back when in an upright storage position) as the upper end of the assembly **140**, **160**.

Openable Handvac Cyclone Bin Assembly

In accordance with another aspect of this disclosure, which may be used by itself or in combination with any one or more other aspects of this disclosure, the cyclone bin assembly of the handvac may be opened to empty the cyclone chamber and/or the dirt collection chamber, to access the pre-motor filter or access a door to open the cyclone chamber and/or the dirt collection chamber by moving part or all of the cyclone bin assembly relative to a main body of the handvac which include the suction motor while the parts remain connected together. For example, the parts may be pivotally mounted to each other.

Referring to FIGS. **110***a* and **110***b*, front portion **1372** of handvac **112** may be pivotally connected to rear portion **1376** of handvac **112** for pivoting between the open position shown and a closed position. In the open position, cyclone bin assembly **136** may be accessible, e.g. for emptying or cleaning.

Front portion **1372** may be pivotally connected to rear portion **1376** in any suitable fashion. In the illustrated embodiment, front portion **1372** is pivotally connected to rear portion **1376** by a hinge **1380** for rotation about a hinge axis **1384** between the open and closed positions.

In the illustrated embodiment, front portion **1372** and rear portion **1376** separate at the interface between cyclone bin assembly **136** and pre-motor filter chamber **556**. For example, front portion **1372** may include cyclone bin assembly **136** except for second end wall **224**, and rear portion may include pre-motor filter chamber **556** and second end wall **224** of cyclone bin assembly **136**. Accordingly, in the open position, access may be provided to empty and clean dirt collection chamber **188** and cyclone chamber **184** of cyclone bin assembly **136**.

Referring to FIG. **116**, in some embodiments handvac **112** may include a handle assembly **300** including handle **484** and suction motor **204**. As exemplified, handle assembly **300** and rear wall **1224** of pre-motor filter chamber **556** may be removable from (entirely, or pivotally connected to) pre-motor filter chamber **556** as a unit toaccess the pre-motor filters **1176** and **1180** inside pre-motor filter chamber **556**, e.g. for cleaning or replacement. As shown in FIG. **117**, in

some embodiments, handle assembly **300** may also be removably connected to rear wall **1224**. In alternative embodiments, handle assembly **300** may be permanently connected to rear wall **1224**.

Openable Dirt Collection Chamber

In accordance with another aspect of this disclosure, which may be used by itself or in combination with any one or more other aspects of this disclosure, the supplemental assembly may have a top and/or bottom openable portion.

As exemplified in FIGS. **111-113**, dirt collection assembly **140** is shown including an upper portion **276** in an open position. Upper portion **276** may be moveably connected to (e.g., pivotally) or removable from dirt collection assembly **140** in any suitable manner. As exemplified, upper portion **276** may be connected to dirt collection chamber **140** by a hinge **1392** for rotation about a hinge axis **1**(not shown) between the open and closed positions.

Upper portion **276** may be retained in the closed position in any suitable fashion. In the illustrated example, dirt collection chamber **140** includes a latch **1400** for securing upper portion **276** in the closed position. Latch **1400** may be user operable for selectively releasing upper portion **276** for movement to the open position.

As exemplified in FIGS. **114** and **115**, upright section **108** of surface cleaning apparatus **152** is shown including a cyclone bin assembly **160**. Cyclone bin assembly **160** is preferably openable for accessing cyclone chamber **308** and dirt collection chamber **141**, e.g. for cleaning or emptying. Preferably, an upper and/or lower portion of cyclone bin assembly **160** may be openable. In the illustrated embodiment, upright section **108** includes an upper portion **1408** and a lower portion **1412**. As shown, upper portion **1408** may be moveably connected to (e.g., pivotally connected to) or removable from lower portion **1412** for movement been a closed position (FIG. **114**) and an open position (FIG. **115**).

Upper portion **1408** may be pivotally connected to lower portion **1412** in any suitable manner. In the illustrated embodiment, lower portion **1412** is pivotally connected to lower portion **1412** by a hinge **1416** for rotation about a hinge axis **1420** between the closed and open positions.

Upper portion **1408** may be retained in the closed position in any suitable manner. For example, upper portion **108** may include a releasable catch for selectively securing upper portion **1408** to lower portion **1412** in the closed position.

Handvac Cyclone Bin Assembly Bypass

In accordance with another aspect of this disclosure, which may be used by itself or in combination with any one or more other aspects of this disclosure, the cyclonic air treatment member of the handvac may be bypassed when a supplemental cyclonic bin assembly is provided. This may prevent accumulation of dirt in the handvac so that the handvac may have more or all of its dirt collection capacity available when disconnected from the upright section. Alternately or in addition, a pre-motor filter of handvac **112** may be bypassed when a supplemental cyclonic bin assembly is provided. For example, the supplemental cyclonic bin assembly may be provided with a pre-motor filter. The pre-motor filter may have a larger surface area than the pre-motor filter of handvac **112**. Accordingly, by bypassing the pre-motor filter of handvac **112**, the pre-motor filter of handvac **112** may only be used in an above floor cleaning mode thereby extending the useable time of the pre-motor filter of handvac **112** before cleaning or replacement may be needed.

Referring to FIGS. **99-101**, handvac **112** may include a primary airflow path **1228** and a bypass airflow path **1232**. As shown, primary airflow path **1228** may extend from air inlet **192** through cyclone bin assembly **136** to suction motor **204**, and bypass airflow path **1232** may extend from air inlet **192** to suction motor **204** bypassing cyclone bin assembly **136**. In some embodiments, bypass airflow path **1232** may extend through the pre-motor filters of pre-motor filter chamber **556**, and in other embodiments, bypass airflow path **1232** may bypass pre-motor filters of pre-motor filter chamber **556**. It will be appreciated that the cyclone and/or the pre-motor filter of the handvac may be bypassed. If both are bypassed, then the handvac may be used to provide some or all of the motive force to draw air through apparatus **168** but not any air treatment upstream of the suction motor.

In the illustrated embodiment, bypass airflow path **1232** is formed in part by a bypass passage **1236**. Bypass passage **1236** may have an upstream end **1238** in airflow communication with handvac inlet **416**, and a downstream end **1240** in airflow communication with motor inlet **1108**. As exemplified by the embodiment illustrated in FIG. **101**, upstream end **1238** may be formed in a sidewall of handvac nozzle **412**, and downstream end **1239** may be formed in a wall of premotor filter chamber **556**. In some embodiments, downstream end **1239** may direct air from bypass passage **1236** into upstream plenum **1208** for routing bypass airflow path **1228** through pre-motor filters **1176** and **1180** as shown. In alternative embodiments, downstream end **1239** may direct air from bypass passage **1236** into downstream plenum **1212** for bypassing pre-motor filters **1176** and **1180**.

As exemplified, apparatus **168** may include a bypass valve **1240** for selectively opening and closing primary and bypass airflow paths **1228** and **1232**. Bypass valve **1240** may be positioned in any one or more of handvac **112**, wand **144**, and supplemental cyclone bin assembly **160**, and may take any suitable form. For example, in some embodiments bypass valve **1240** may include components parts positioned in two or more of handvac **112**, wand **144**, and supplemental cyclone bin assembly **108** which cooperate and interact to open and close primary and bypass airflow paths **1228** and **1232**.

In the illustrated embodiment bypass valve **1240** is positioned in inlet nozzle **412** of handvac **112**. Bypass valve **1240** may be movable between a first position (FIGS. **99** and **100**) in which bypass airflow path **1232** is closed and primary airflow path **1228** is open, and a second position (FIG. **101**) in which bypass airflow path **1232** is open and primary airflow path **1228** is closed.

As exemplified in FIGS. **99-101**, bypass valve **1240** may include a wheel **1242**, a door **1244**, and an actuator **1246**. Wheel **1242** may be rotatably connected to nozzle **412** for rotation about its center. Door **1244** may be rigidly connected to wheel **1242** for rotation as one with wheel **1242**. For example, door **1244** and wheel **1242** may rotate together as a unit. As shown, door **1244** and wheel **1242** may be rotatable between a first position (FIGS. **99** and **100**) in which door **1244** seals an upstream end **1238** of bypass passage **1236**, and a second position (FIG. **101**) in which door **1244** seals an air inlet **192** of cyclone chamber **184**.

As exemplified, actuator **1246** may include an upper end **1248** connected to wheel **1242** radially outboard of the center of wheel **1242**. Actuator **1246** may be movable vertically between a lowered position (FIGS. **99** and **100**), and a raised position (FIG. **101**). As shown, moving actuator **1246** from the lowered position to the raised position may rotate wheel **1242** and door **1244** clockwise which may move door **1244** to the second position (FIG. **101**) in which door **1244** seals air inlet **192** of cyclone chamber **184**. Further, moving actuator **1246** from the raised position to the lowered may rotate wheel **1242** and door **1244** counter

clockwise which may move door **1244** to the first position (FIGS. **99** and **100**) in which door **1244** seals upstream end **1238** of bypass passage **1236**.

In some embodiments, actuator **1246** may be biased to the lowered position (FIGS. **99** and **100**). Consequently, door **1244** and wheel **1242** may be biased to the first position (FIGS. **99** and **100**) in which door **1244** seals an upstream end **1238** of bypass passage **1236**. Actuator **1246** may be biased in any suitable fashion, such as by a linear coil spring **1250**. In alternative embodiments, wheel **1242** may be biased clockwise in a suitable manner, such as by a torsional spring.

Actuator **1246** may have a lower end **1252** which extends outside of the airflow path. Lower end **1252** may be acted upon to move actuator **1246** vertically from the lowered position to the raised position for opening bypass airflow path **1232** and closing primary airflow path **1228**. As shown, when handvac **112** is disconnected from wand **144** (FIG. **99**), bypass valve **1240** may close the bypass airflow path **1232** (e.g. under the bias of spring **1250**). Further, when handvac **112** is connected to wand **144** without supplemental cyclone bin assembly **160** (FIG. **100**), bypass valve **120** may also close the bypass airflow path **1232**. In each of these cases, the air entering handvac **112** is directed through handvac cyclone bin assembly **136** to separate dirt from the airflow. This may permit handvac **112** to operate when disconnected from supplemental cyclone bin assembly **160**.

As shown in FIG. **101**, when handvac **112** and cyclone bin assembly **160** are both connected to wand **144**, an upper end **1254** of cyclone bin assembly **160** (handle **1254** in the illustrated example) may push against actuator lower end **1252** thereby moving actuator **1246** upwardly. This may rotate wheel **1242** and door **1244** counter clockwise, opening bypass airflow path **1232** and closing primary airflow path **1228**. As shown, air exiting cyclone bin assembly **160** may travel through bypass airflow path **1232** toward suction motor **204** bypassing cyclone chamber **184**. This may permit supplemental cyclone bin assembly **160** to separate and collect dirt from the airflow path instead of handvac cyclone bin assembly **136**. In turn, this may inhibit dirt accumulation in handvac dirt collection chamber **188**, which may help to maximize the available dirt collection capacity of handvac dirt collection chamber **188** when the user chooses to disconnect cyclone bin assembly **160**.

In the illustrated example, lower end **1252** is sloped. This may permit supplemental bin assembly **160** to be toed into wand **144** and then rotated horizontally towards wand **144** to complete the connection with wand **144**, whereby the upper end **1254** of supplemental bin assembly **160** may ride the slope of lower end **1252** to push actuator **1246** upwardly.

Accordingly, bypass valve **1240** may be actuated to reconfigure the airflow path through handvac **112** automatically upon connecting and disconnecting supplemental bin assembly **160** from airflow communication with handvac **112**. For example, bypass valve **1240** may be biased to close bypass airflow path **1232** whenever handvac **112** is not in airflow communication with supplemental bin assembly **160** so that the air treatment member of handvac **112** may separate dirt from the airflow. Similarly, bypass valve **1240** may be configured to open bypass airflow path **1232** and close primary airflow path **1228** whenever handvac **112** is in airflow communication with supplemental bin assembly **160** so that the air treatment member of handvac **112** does not separate and store dirt from the airflow.

The following is a description of numerous embodiments of surface cleaning apparatus **168**. In the figures associated with some embodiments, a bypass valve **1232** and/or a diversion valve **712** may be represented schematically. It will be appreciated that the embodiments may be practiced using the bypass valves **1232** and/or diversion valves **712** described above, or other suitable valves.

Referring to FIG. **102**, in some embodiments supplemental cyclone bin assembly **160** may include one or more pre-motor filters **1256** (herein after referred to as pre-motor filter **1256** in the singular) positioned in the airflow path. Preferably, pre-motor filter **1256** is positioned downstream of cyclone chamber **308**. As shown, pre-motor filter **1256** may be positioned between cyclone chamber air outlet **320** and outlet passage **476**.

In some embodiments, pre-motor filter **1256** may separate fine dirt particles from the airflow in substitution for the pre-motor filters **1176** and **1180** of handvac **112**. As shown, bypass valve **1232** may divert air from supplemental cyclone bin assembly **160** into a bypass airflow path which bypasses handvac cyclone bin assembly **136** and pre-motor filters **1176** and **1180**. For example, downstream end of **1239** of bypass passage **1236** may direct the bypass airflow path **1232** to downstream plenum **1212** for bypassing pre-motor filters **1176** and **1180**.

It will be appreciated that a pre-motor filter will have a certain filtering capacity of fine particles at which point the filter should be cleaned or replaced. By incorporating a pre-motor filter into the supplemental cyclone bin assembly **160**, and using this filter whenever the supplemental cyclone bin assembly **160** is connected to the handvac, the filtering capacity of the handvac pre-motor filters may be preserved. This may permit extended use of the handvac pre-motor filters before they require cleaning or replacement.

It will also be appreciated that there will be a measurable pressure drop across a pre-motor filter placed in an airflow path. If positioned in series, too many filters may produce a pressure drop that materially reduces air flow at the dirty air inlet. By filtering the airflow alternately by the supplemental pre-motor filter **1256** and by the handvac pre-motor filter when the handvac is used without assembly **140**, **160** attached the operational life of the handvac pre-motor filter may be extended.

As exemplified in the alternate embodiment of FIG. **103**, surface cleaning head **104** may include a second suction motor **1258**. Second suction motor **1258** may operate in parallel with or alternately instead of handvac suction motor **204** when handvac **112** is attached in flow communication with surface cleaning head **104**. For example, a portion of air exiting supplemental cyclone bin assembly **160** may proceed to handvac suction motor **204** and a different portion may proceed to second suction motor **1258**. In the illustrated embodiment, a second airflow path **1260** from diversion valve **712** to second suction motor **1258** is formed by an airflow conduit **1262** which connects diversion valve **712** to surface cleaning head **104**.

As shown, when supplemental cyclone bin assembly **160** is in airflow communication with handvac **112**, the airflow path extends through the air treatment member(s) of supplemental cyclone bin assembly **160** (e.g. cyclone chamber **308** and pre-motor filter **1256**) and then divides into two parallel air flow paths **1232** and **1260**. Bypass airflow path **1232** directs one portion of the airflow to the handvac suction motor **204** bypassing handvac cyclone chamber **184** (and optionally bypassing handvac pre-motor filters **1176** and **1180**), and second airflow path **1260** directs a second portion of the airflow path to the second suction motor **1258** in head **104**.

It will be appreciated that suction motors **1258** and **204** operating in parallel may generate greater suction at surface

cleaning head **104** than any one of suction motors **1258** and **204** may generate operating alone. This may also permit supplemental cyclone bin **160** to include a pre-motor filter **1256** having greater surface area than the pre-motor filter of the handvac, where the additional pressure drop due to the use of two pre-motor filters may be compensated for by the enhanced suction generation of the parallel motors **1258** and **204**.

As exemplified in the alternate embodiment of FIG. **104***a*, supplemental suction motor **160** may include a second suction motor **1258** which may operate in the same way as the embodiment of FIG. **103**. Second suction motor **1258** may operate in parallel with handvac suction motor **204**. For example, a portion of air exiting supplemental cyclone chamber **160** may proceed to handvac suction motor **204** and a different portion may proceed to second suction motor **1258**. In the illustrated embodiment, a second airflow path **1260** from outlet passage **478** to second suction motor **1258** is formed by an airflow conduit **1262**.

As shown, when supplemental cyclone bin assembly **160** is in airflow communication with handvac **112**, the airflow path extends through the air treatment member(s) of supplemental cyclone bin assembly **160** (e.g. cyclone chamber **308** and pre-motor filter **1256**) and then divides into two parallel air flow paths **1232** and **1260**. Bypass airflow path **1232** directs one portion of the airflow to the handvac suction motor **204** bypassing handvac cyclone chamber **184** (and optionally bypassing handvac pre-motor filters **1176** and **1180**), and second airflow path **1260** directs a second portion of the airflow path to the second suction motor **1258**.

As shown, second suction motor **1258** may be positioned below dirt collection chamber **140** and cyclone chamber **308** of supplemental cyclone bin assembly **160**, and second suction motor **1258** may be vertically aligned above surface cleaning head **104**. This may help to lower the center of gravity of the apparatus **168** for enhanced stability against tipping.

In some embodiments, a pre-motor filter may be positioned in each of bypass airflow path **1232** and second airflow path **1260**, as shown. For example, a pre-motor filter **1256** may be positioned in the second airflow path **1260** between outlet passage **478** and second suction motor **1258**, and bypass airflow path **1232** may direct the airflow through handvac pre-motor filters **1176** and **1180**. In the illustrated embodiment, pre-motor filter **1256** is shown positioned below dirt collection chamber **140** of supplemental cyclone bin assembly **160**.

In alternative embodiments, air exiting cyclone chamber **308** may pass through a common pre-motor filter before dividing between the second airflow path **1260** and bypass airflow path **1232**. For example, in FIG. **104***b* pre-motor filter **1256** is shown positioned downstream of cyclone chamber **308** and upstream of outlet passage **478**. As shown, bypass airflow path **1232** may bypass handvac pre-motor filters **1176** and **1180**. This may permit the filtration capacity of handvac pre-motor filters **1176** and **1180** to be preserved for use when supplemental cyclone bin assembly **160** is disconnected from airflow communication with handvac **112**. In alternative embodiments, pre-motor filters **1176** and **1180** may be positioned in the bypass airflow path **1232**.

As exemplified in FIG. **105***a* dirt collection chamber **140** and cyclone chamber **308** may be removable as a sealed unit from wand **144** and second suction motor **1258**. For example, second suction motor **1258** may be mounted or removably mounted to wand **144** so that dirt collection chamber **140** and cyclone chamber **308** may be removed while second suction motor **1258** remains mounted to wand **144**. This may permit cleaning and/or emptying of dirt collection chamber **140** and cyclone chamber **308** (e.g. carrying the same to a garbage bin to dump their contents) without having to carry second suction motor **1258** (which may have a non-trivial weight). Also, assembly **160** may be removable as a unit to convert the apparatus to a lightweight or above floor operating mode.

As exemplified in FIG. **118**, the air treatment members of handvac **112** and supplementary cyclone bin assembly **160** may operate in parallel. For example, handvac **112** and supplementary cyclone bin assembly **160** may separate dirt from mutually exclusive portions of the airflow entering dirty air inlet **124**.

In the illustrated example, wand **144** may define two airflow paths. A first airflow path **1428** may be formed by a first division of wand **144** and may direct airflow moving therein to supplemental cyclone bin assembly **160** for cleaning, and then from supplemental cyclone bin assembly **160** to bypass airflow path **1232** of handvac **112**. A second airflow path **1432** may be formed by a second division of wand **144** and may direct airflow moving therein to primary airflow path **1228** of handvac **112** for cleaning by cyclone bin assembly **136**.

As exemplified, dirty air entering dirty air inlet **124** may divide into two airflows at wand upstream end **360** and then travel through the first and second airflow paths **1428** and **1432**. Dirt may be separated from each airflow stream by a different one of supplementary cyclone bin assembly **160** and handvac **112**. In the illustrated embodiment, the two airflows may recombine in pre-motor filter chamber **556**. For example, the two airflows may recombine at the upstream plenum **1208** so that both airflows pass through pre-motor filters **1176** and **1180** before exiting through suction motor **204**. In alternative embodiments, the two airflows may recombine at the downstream plenum **1212**. For example, supplemental cyclone bin assembly **160** may have its own pre-motor filter for filtering the air of the first airflow path **1428**.

In some embodiments, surface cleaning apparatus **168** may include two or more suction motors operating in series. In one aspect, this may enhance the suction at dirty air inlet **124** and/or compensate for suction loss from additional or higher efficiency air treatment members.

Referring to FIGS. **119***a* and **119***b*, a second suction motor **1258** may be positioned in the airflow path between dirty air inlet **124** and handvac **112**. For example, second suction motor **1258** may be a dirty air suction motor positioned in surface cleaning head **104**. As shown, dirty air entering dirty air inlet **124** may be drawn through second suction motor **1258** before the airflow is cleaned by supplemental dirt collection chamber **160** and/or handvac **112** and discharged through handvac suction motor **204**.

Referring to FIG. **120**, second suction motor **1258** may be a clean air motor positioned downstream of handvac suction motor **204**. As exemplified, motor outlet **1112** of handvac suction motor **204** may be fluidly connected to second suction motor **1258** in surface cleaning head **104** by an airflow path **1436**. As shown, airflow path **1436** may be formed by a conduit **1440**.

Referring to FIG. **121***a*, in some embodiments second suction motor **1258** may be positioned in supplementary cyclone bin assembly **160**. For example, second suction motor **1258** may be positioned below dirt collection chamber **140**. As shown, airflow path **1436** from motor outlet **1112** may direct air from suction motor **204** to second suction motor **1258** in supplementary cyclone bin assembly **160**. For example, conduit **1440** may extend from motor outlet **1112**

to second suction motor **1258**. Conduit **1440** may take any suitable form. For example, conduit **1440** may be a rigid conduit as shown. Alternatively, FIG. **121***b* shows an embodiment where conduit **1440** is a flexible hose.

In some embodiments, when handvac is connected with supplement cyclone bin assembly **160**, handvac **112** may not be positioned in the airflow path through the surface cleaning apparatus. For example, air entering the dirty air inlet **124** of the surface cleaning head may be cleaned by the supplementary cyclone bin assembly **160** and discharged without ever passing through handvac **112**. In this way, handvac **112** may act as a handgrip for manipulating and steering surface cleaning apparatus **168** in the upright mode but not as an air cleaning implement.

In some embodiment, as exemplified in FIG. **122**, the handvac may be bypassed when assembly **160** is attached to upright section **108**. As exemplified, air entering dirt air inlet **124** may move through wand **144** to supplemental cyclone bin assembly **160** and be discharged without moving through handvac **112**. For example, the airflow path through surface cleaning apparatus **168** may direct all air from dirty air inlet **124** through wand **144** to cyclone chamber **308** to outlet passage **476** to second airflow path **1260** to suction motor **1258** of supplemental cyclone bin assembly **160**, which may discharge the air to the outside environment.

Still referring to FIG. **122**, in some embodiments there may be a plurality of suction motors in series. In the illustrated embodiment, surface cleaning head **104** includes a suction motor **1258** positioned in the airflow path between dirty air inlet **124** and wand **144**. In alternative embodiments, suction motor **1258** may be the only suction motor in the airflow path.

While the above description provides examples of the embodiments, it will be appreciated that some features and/or functions of the described embodiments are susceptible to modification without departing from the spirit and principles of operation of the described embodiments. Accordingly, what has been described above has been intended to be illustrative of the invention and non-limiting and it will be understood by persons skilled in the art that other variants and modifications may be made without departing from the scope of the invention as defined in the claims appended hereto. The scope of the claims should not be limited by the preferred embodiments and examples, but should be given the broadest interpretation consistent with the description as a whole.

I claim:

1. A hand vacuum cleaner having a front end having a dirty air inlet, a clean air outlet, an upper end and a bottom, the hand vacuum cleaner comprising:

(a) a vacuum cleaner body comprising an upper end, a lower end, a front end, a rear end and a handle, the handle extending between a first handle end and a second handle end, the hand vacuum cleaner body including a suction motor and fan assembly, the suction motor and fan assembly having a suction motor axis of rotation; and,

(b) a cyclone unit comprising a cyclone having a cyclone axis of rotation, a cyclone air inlet, a cyclone air outlet, a front end and a rear end,

wherein when the hand vacuum cleaner is positioned with the upper end above the bottom, the cyclone axis of rotation is generally horizontal and extends between the front and rear ends of the cyclone, and

wherein when the hand vacuum cleaner is positioned with the upper end above the bottom, the handle is inclined forwardly at an angle that is between 10 and 80 degrees from a vertical axis, and

wherein the handle is provided on a sidewall at a rear portion of the hand vacuum cleaner body, and

wherein the handle has a handle axis that intersects the suction motor.

2. The hand vacuum cleaner of claim **1** wherein the handle has a handle axis that intersects the suction motor axis of rotation.

3. The hand vacuum cleaner of claim **1** wherein the hand vacuum cleaner body comprises a suction motor and fan assembly housing and the handle extends away from the suction motor and fan assembly housing.

4. The hand vacuum cleaner of claim **1** wherein the handle has a hand grip portion that extends upwardly and forwardly when the hand vacuum cleaner body is positioned with the lower end on a horizontal surface.

5. The hand vacuum cleaner of claim **1** on a horizontal surface, the suction motor axis of rotation is generally horizontal.

6. The hand vacuum cleaner of claim **1** wherein when the hand vacuum cleaner body is positioned with the lower end on a horizontal surface, the suction motor axis of rotation is positioned below the cyclone axis of rotation.

7. The hand vacuum cleaner of claim **1** wherein the cyclone has a front end wall having the cyclone air inlet.

8. The hand vacuum cleaner of claim **1** wherein the cyclone axis of rotation is generally parallel to the suction motor axis of rotation.

9. The hand vacuum cleaner of claim **1** wherein the cyclone unit is provided at the front end of the hand vacuum cleaner body.

10. The hand vacuum cleaner of claim **1** wherein the dirty air inlet is provided at a front end of the cyclone unit.

11. The hand vacuum cleaner of claim **1** wherein the dirty air inlet comprises an inlet passage that extends longitudinally between an inlet end and an outlet end and has a longitudinal passage axis that is coaxial with the cyclone axis and the outlet end communicates with the cyclone air inlet.

12. The hand vacuum cleaner of claim **11** wherein the handle has a hand grip portion that extends upwardly and forwardly when the hand vacuum cleaner body is positioned with the lower end on a horizontal surface.

13. The hand vacuum cleaner of claim **11** wherein the suction motor axis of rotation is positioned below the cyclone axis of rotation when the hand vacuum cleaner body is positioned with the lower end on a horizontal surface.

14. The hand vacuum cleaner of claim **11** wherein the suction motor axis of rotation is positioned below longitudinal passage axis when the hand vacuum cleaner body is positioned with the lower end on a horizontal surface.

15. The hand vacuum cleaner of claim **1** wherein the handle is forward of a rear end of the hand vacuum cleaner body.

16. The hand vacuum cleaner of claim **1** wherein a plane that is perpendicular to the motor axis extends through the handle from the first handle end to the second handle end.

* * * * *