UTILITY MODEL

for 20 years

for "LIGHTWEIGHT DUST COLLECTION EQUIPMENT," granted to Dayer, S.A., Spanish, domiciled in Barcelona, Castañer, 15.

= =

DESIGN BRIEF

Currently known electric dust collection machines are very bulky, expensive in terms of cost and maintenance, and, in general, somewhat disproportionate to the standard of living with regard to both cost and dimensions, at least as far as Spain is concerned.

The lightweight dust collection equipment described in this Utility Model has been particularly designed to provide housewives with an effective, low-cost, energy-saving, and extremely easy-to-handle tool.

For descriptive purposes, we shall refer to the drawings that, by way of example, are attached to this brief.

[The equipment] consists of a perfectly shielded electric collector (1 and 2) of small proportions, enclosed in a lightweight cylindrical casing (3), into which the head (4) is fitted; the casing (3) has a pistol grip (5) with the corresponding switch (6) in the usual location of the trigger attached radially to its rear part; at its opposite end, the head (4) also has the air and dust discharge nozzle (7) attached radially, into the mouth of which the dust collection bag may be plugged.

The front base of the surrounding head (4) is closed with the annular wooden cover (9) that forms the plate of a fixed brush (10); in its central hole (11), it forms the direct plug for the collection nozzle (12) or for the straight or curved tubular rods (13 and 14), pluggable to the nozzle itself (12). The engine is suspended by elastic rubber stops (15).

Anything that does not affect, alter, change or modify the essence of the described lightweight collection equipment shall be variable for the purposes of the current model.

N O T E .

The following are claimed as the object of this registration by Utility Model:

1 - Lightweight dust collection equipment, which consists of an electric collector of reduced power and dimensions, enclosed within a lightweight cylindrical casing with a front head to enclose the collector; on its rear lateral part, the cylindrical casing has a radial handle like a pistol, with the electric engine switch in the location of the trigger; the front head laterally forms the discharge hopper and links to the dust collection bag; the front base of this head is closed by a fixed annular brush, and straight or curved tubular rods connecting to the nozzle can be plugged into the central hole of this brush, or the nozzle itself can be plugged directly.

Whatever the circumstances that contribute to the essentiality of the Utility Model defined in the previous claim, the object of which is:

2 - “LIGHTWEIGHT DUST COLLECTION EQUIPMENT.”

This brief consists of three numbered sheets, typed on one side and the drawing attached hereto.

Barcelona, the twenty-third of August, nineteen fifty-four.

Authorized by Dayer, S.A.,

P.P. L. DURÁN

[signature]

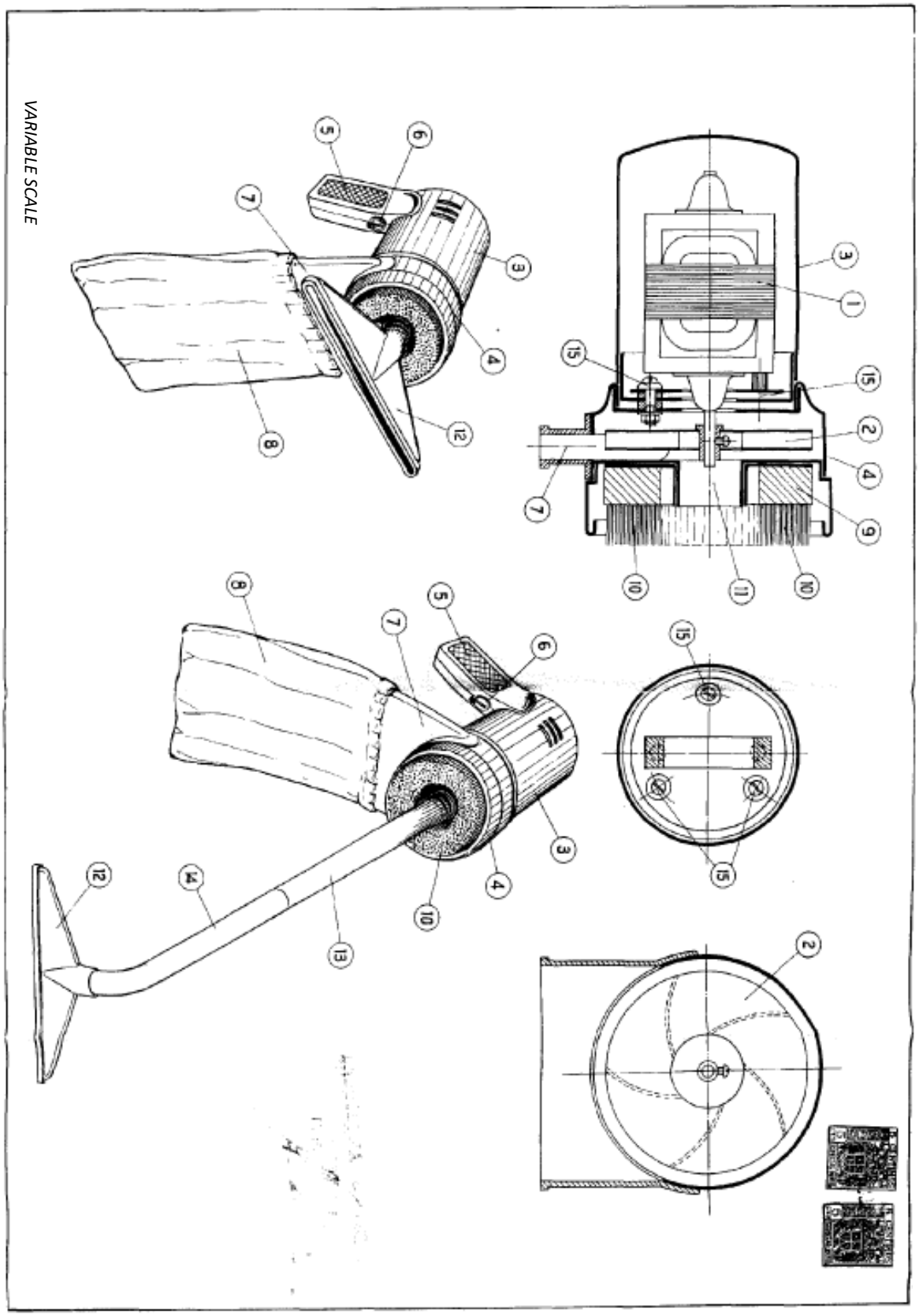
DAYER S. A.
SINGLE SHEET
VARIABLE SCALE

TRANSLATOR CERTIFICATION

Date: November 30, 2023

To whom it may concern:

I, María Gabriela Arriarán Mauroni , a translator fluent in the Spanish and English languages, on behalf of Morningside Translations, do solemnly and sincerely declare that the following is, to the best of my knowledge and belief, a true and correct translation of the document(s) listed below in a form that best reflects the intention and meaning of the original text.

The document is designated as:

- **ES43816U**

María Gabriela Arriarán Mauroni
Signature

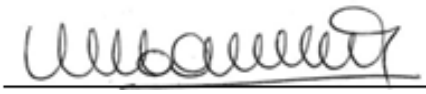

Print