Published on JAN 20, 1955
34c, 5/30. 1 691 786. Robert Böhmler.
Deisslingen, Neckar. | Small vacuum cleaner
August 23, 1954. B 18 982. (T. 6: Z. 2)

[stamp: illegible]

No. 1 691 786 Filed December 29, 1954

Patent Attorney
Dipl.-Ing., Technologist
Dr. jur. Oscar Holmer
Bank account: Süddeutsche Bank
Friedrichshafen branch no. 2135
Postal checking account: Munich
No. 324 62
Phone No. 26 67

P.A.
506124*08/23/1954

Friedrichshafen a. B.,
Bahnhofstrasse 5 /
Oranienstraße
(on Friedrichsstraße)

August 21, 1954

Your reference:
brd 8882
My reference:

To the
German Patent Office

M u n i c h 2

On behalf of the Industrialist Robert Böhmler, Deisslingen a.N., I am hereby applying for the registration of the invention described in the enclosed documents in the utility model register.

The title is:

"Small vacuum cleaner."

The application fee of DM 9.00 will be paid to the Cashier's Officer after we have received the file number.

Enclosures:
1. a power of attorney,
2. two further copies of the application,
3. three identical descriptions with eight claims each,
4. two sheets of drawings, in triplicate,
5. a prepared confirmation of receipt for the file number notification.

[signature]
Patent Attorney

1 / s

Verbal negotiations are also possible after prior agreement. Agreements made by telephone shall only become binding after written confirmation.
The fees are based on the fees scale of the German Chamber of Patent Attorneys.

Patent attorney
Dipl.-Ing., Technologist
Dr. jur. Oscar Holmer

P.A. 506124*08/23/1954

[hw: 2]

Friedrichshafen a. B., August 21, 1954
Bahnhofstrasse 5

My reference: brd 8882

Description
for a utility model application by the
Industrialist Robert Böhmler, Deisslingen a.N.,
relating to a
"small vacuum cleaner."

The object of the invention is a small vacuum cleaner which is also used in particular for the convenient removal of dust from objects located directly in front of the vacuum cleaner and within easy reach. Vacuum cleaners are known in a wide variety of designs. Most vacuum cleaners, however, are relatively large and heavy. The handle of the known vacuum cleaners is usually attached to the housing, which makes operation very difficult and makes it impossible to use them to remove dust from smaller objects, in particular objects that are not on the floor or on the walls, but on tables and within easy reach. The design of the known vacuum cleaners also means that a relatively high motor power is generally required.

The vacuum cleaner according to the invention eliminates the identified deficiencies in a simple manner in that the drive motor with the suction blades arranged directly in front of it is moved forward in the housing of the vacuum cleaner to such an extent that an extremely small gap remains between the suction blades and the end face of the housing and in that the aspired air, as well as the dust particles, have to travel a disproportionately short distance in order to pass through the suction blades and to the dust bag. The suction blades have a strongly curved shape, which facilitates the movement of air and dust

[hw: 3]

in a favorable manner. The drive motor is fitted with protective aluminum covers so that the heat generated by the motor can be easily dissipated.

The suction nozzle is connected to the housing either by a bayonet lock or by means of a U-shaped tension spring. The front end of the suction nozzle is inclined to the longitudinal axis at an angle of approximately 45°. The vacuum cleaner is fitted with a pistol-grip holder that is attached to the housing. The electrical supply cables and the vacuum cleaner's switching device are located in this holder. The handle of the vacuum cleaner is detachably attached to the upper part of the holder. The handle is then screwed into the holder when the vacuum cleaner is to be used, for example, to remove dust from the floor, etc. etc. Further features according to the invention are shown in the drawings and the following description.

The drawing shows one embodiment of a small vacuum cleaner.

Fig. 1 shows, partly in a cross-section, a side view of an embodiment of the small vacuum cleaner,

Fig. 2 shows a cross-section according to A-B of Fig. 1,

Fig. 3 shows a view or cross-section according to C-D of Fig. 1,

Fig. 4 shows, partly in a cross-section, a side view of another embodiment of the vacuum cleaner,

Fig. 5 shows, partly in a cross-section, a top view of the front part of the housing and the suction nozzle as shown in Fig. 4,

Fig. 6 shows, on an even larger scale, a partial section of the closure device of the embodiment according to Fig. 4 and 5,

Fig. 7 shows a front view of the embodiment according to E-F of Fig. 4 in the closed state,

Fig. 8 shows the illustration of Fig. 7 in the open state.

[hw: 4]

The small vacuum cleaner according to the invention consists of a housing 1, to the front of which a suction nozzle 2 with a sweeping brush 3 and to the rear of which a dust bag 4 is connected.

The drive motor 5 is positioned so far forward in the housing 1 that the gap between the front edge of the suction blades 6 and the inner front surface 7 of the housing 1 is as small as possible. The suction blades 6 have a strongly curved shape, which exerts a double effect in that, as a result of this shape, the aspirated air is pressed to the sides and to the rear towards the dust bag 4 with minimum effort. The drive motor 5 is equipped with two aluminum covers 8, 9, which quickly absorb the heat generated by the motor 5 and transfer it to the air passing along the covers 8, 9. This considerably increases the efficiency of the device.

The suction nozzle 2 is connected to the housing 1 either by means of a bayonet mechanism 10 (Fig. 1) or by means of a double-acting U-shaped tension spring 11 (Fig. 4 to 8). For the sake of simplicity, the bayonet mechanism 10 is not shown in detail in the drawing. This mechanism only allows the suction nozzle 2 to assume two positions, which are offset by 180° in relation to the housing 1. In contrast, a closure by means of the tension spring 11 allows the suction nozzle 2, and thus the sweeping brush 3, to be fastened to the housing 1 in any position, i.e., with a 360° rotation. The legs 12, 13 of the tension spring 11 are located in recesses 14 of the housing 1 and enter the interior of the housing 1 when the tension spring 11 is compressed by a tensioning device 15, as a result of which they slide on chamfers 16 of the suction nozzle 2 in such a way that the latter is pressed firmly against the housing 1.

The front end 18 of the suction nozzle 2 is inclined by approximately 45° relative to its longitudinal axis. Furthermore, the sweeping brush 3 is also attached at an additional angle, in

[hw: 5]

the direction of the inclination of the suction nozzle 3, to the front end 18 of the suction nozzle 2 (Fig. 4).

A pistol-grip holder 19 is attached to the housing 1, at the lower end of which a supply cable 20 is inserted. A switch 21 is provided on the holder 10 to switch the power on and off. A threaded hole is provided on the upper part of the holder 19 into which a handle 22 can be screwed so as to be able to use the vacuum cleaner in the most convenient way in any position.

Claims

1. Small vacuum cleaner, characterized by a drive motor (5) advanced so far forward in the housing (1) and suction blades (6) located in front of it that an extremely small gap remains between the front edge of the suction blades (6) and the inner end face (7) of the housing (1).

2. Small vacuum cleaner according to claim 1, characterized in that the suction blades (6) have a strongly curved shape.

3. Small vacuum cleaner according to claims 1 and 2, characterized in that the drive motor (5) is provided with protective aluminum covers (8, 9).

4. Small vacuum cleaner according to claim 1 to 3, characterized in that the suction nozzle (2) is connected to the housing (1) by means of a bayonet mechanism (10).

5. Small vacuum cleaner according to claims 1 to 3, characterized in that the suction nozzle (2) is connected to the housing (1) by means of a double-acting, U-shaped tension spring (11) which is placed on the latter and whose legs (12,13) pass through recesses (14) provided in the housing (1) when the tension spring (11) is compressed into the interior of the housing (1) and slide through a tensioning device (15) on chamfers (16) of the suction nozzle (2) in such a way that the latter is pressed firmly against a rubber ring (17) inserted in the front part of the housing (1) in any position assumed by an axial rotation.

6. Small vacuum cleaner according to claims 1 to 5, characterized in that the front end (18) of the suction nozzle (2) is inclined by approximately 45° relative to the longitudinal axis.

7. Small vacuum cleaner according to claim 1 to 6, characterized in that the sweeping brush (3) is attached to the front end (18) of the suction nozzle (2) with an additional downward inclination.

8. Small vacuum cleaner according to claim 1 to 7, characterized in that the handle (22) thereof is detachably attached to the upper part of the holder (19).

[signature]
Patent attorney

1/s

My reference: brd 8882

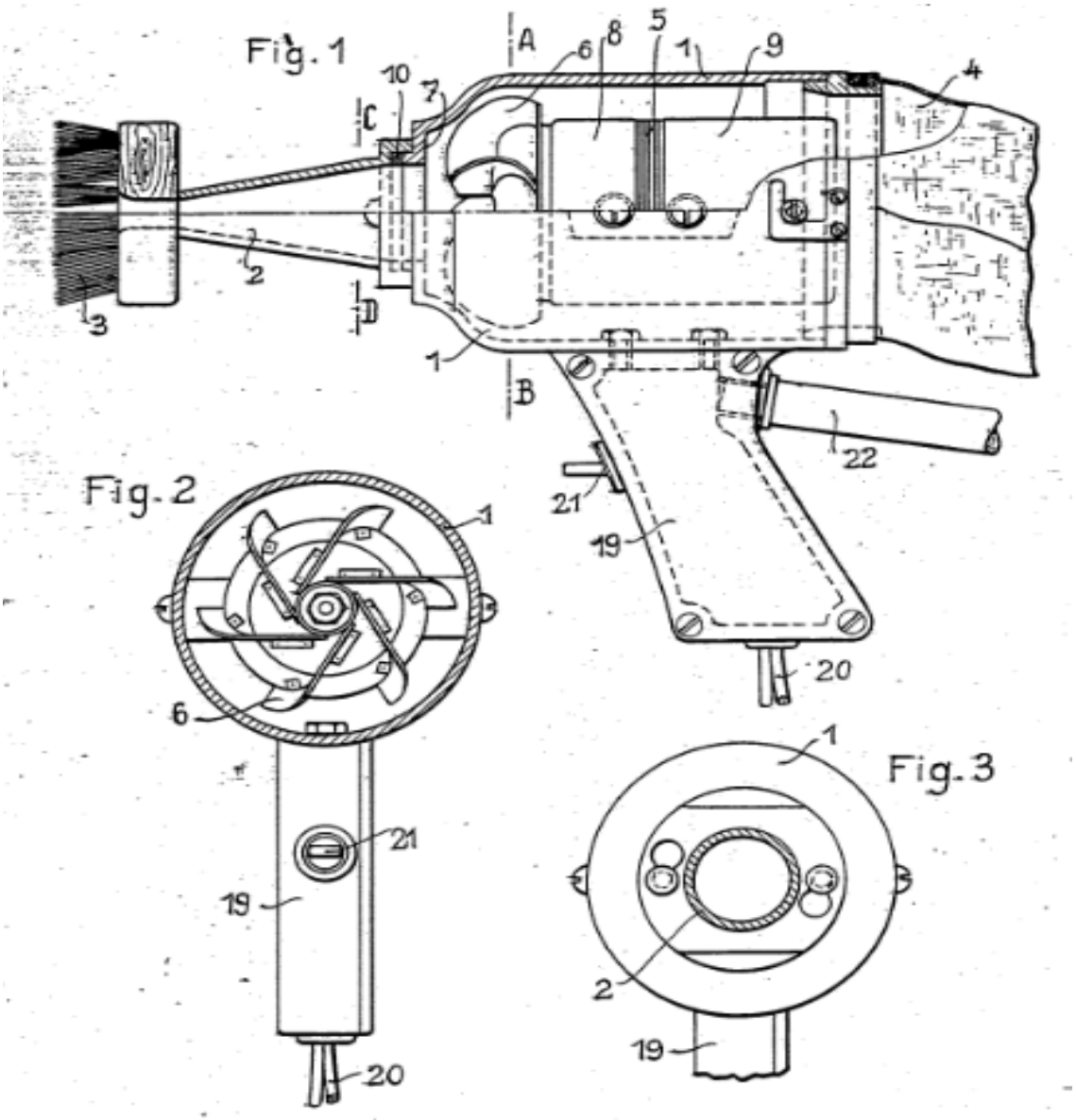

MORNINGSIDE
A Questel Company

TRANSLATION CERTIFICATION

Date: June 12, 2024

To whom it may concern:

This is to certify that the attached translation is an accurate representation of the documents received by this office. The translation was completed from:

- German (Germany)

To:

- English (USA)

The documents are designated as:

- DE1691786U

Emily Paras, Project Manager in this company, attests to the following:

"To the best of my knowledge, the aforementioned documents are a true, full and accurate translation of the specified documents."

Signature of Emily Paras