US007175682B2

(12) **United States Patent**
Nakai et al.

(10) **Patent No.: US 7,175,682 B2**
(45) **Date of Patent: Feb. 13, 2007**

(54) **ELECTRIC VACUUM CLEANER EQUIPPED WITH A DUST COLLECTION UNIT**

(75) Inventors: **Koichi Nakai**, Hyogo (JP); **Atsuo Hamada**, Hyogo (JP); **Kazumasa Kamatani**, Hyogo (JP); **Kazuyoshi Yoshimi**, Hyogo (JP); **Akihiro Yoneyama**, Hyogo (JP)

(73) Assignee: **Sanyo Electric Co., Ltd.**, Osaka (JP)

(*) Notice: Subject to any disclaimer, the term of this patent is extended or adjusted under 35 U.S.C. 154(b) by 0 days.

(21) Appl. No.: **11/149,151**

(22) Filed: **Jun. 10, 2005**

(65) **Prior Publication Data**

US 2005/0223518 A1 Oct. 13, 2005

Related U.S. Application Data

(63) Continuation of application No. 10/321,430, filed on Dec. 18, 2002, now Pat. No. 7,014,675.

(30) **Foreign Application Priority Data**

Dec. 28, 2001 (JP) 2001-399354

(51) **Int. Cl.**
B01D 50/00 (2006.01)

(52) **U.S. Cl.** **55/429**; 55/433; 55/502; 55/DIG. 3; 15/350; 15/352; 15/353

(58) **Field of Classification Search** ..... 55/337, 55/429, 433, 502, DIG. 3; 15/350, 352, 15/353

See application file for complete search history.

(56) **References Cited**

U.S. PATENT DOCUMENTS

6,607,572 B2 * 8/2003 Gammack et al. 55/343

FOREIGN PATENT DOCUMENTS

CN 1492742 A 4/2004

(Continued)

OTHER PUBLICATIONS

Examination Report Under Section 18(3) from U.K. Patent Office, dated Dec. 17, 2004.

Primary Examiner—Robert Hopkins
(74) *Attorney, Agent, or Firm*—Westerman, Hattori, Daniels & Adrian, LLP.

(57) **ABSTRACT**

An electric vacuum cleaner is equipped with a dust collection unit (**20**) that can be detachably installed in the air passage en route from a suction unit to an electric fan of the cleaner. The dust collection unit (**20**) comprises a dust collecting case (**21**) for accumulating dust sucked in, a lid member (**32**) that can be opened to discharge the accumulated dust; and a lock mechanism (clamp lever) (**33**) for locking the lid member **32** tightly closed. The electric vacuum cleaner is further provided with a lid opening mechanism (lid opening stick (**35**) for forcibly opening the lid member (**32**) in cooperation with the lock mechanism locking the lid member. Even when the sealing pressure of the packing is high or when the accumulated dust does not weigh on the lid member because the dust is compacted on the inner wall of the dust collecting case, the lid member can be opened without difficulty to discharge the dust, without opening it by hand. Thus, the user can avoid handling unsanitary dust.

10 Claims, 19 Drawing Sheets

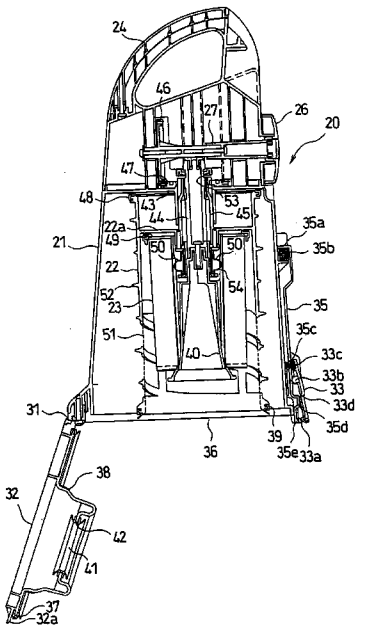

FOREIGN PATENT DOCUMENTS

EP	1023864 A2	8/2000
EP	1 370 172 B1	12/2003
JP	53-120850	10/1978
JP	55-110522	8/1980
JP	2004-528876	9/2004

* cited by examiner

FIG. 1

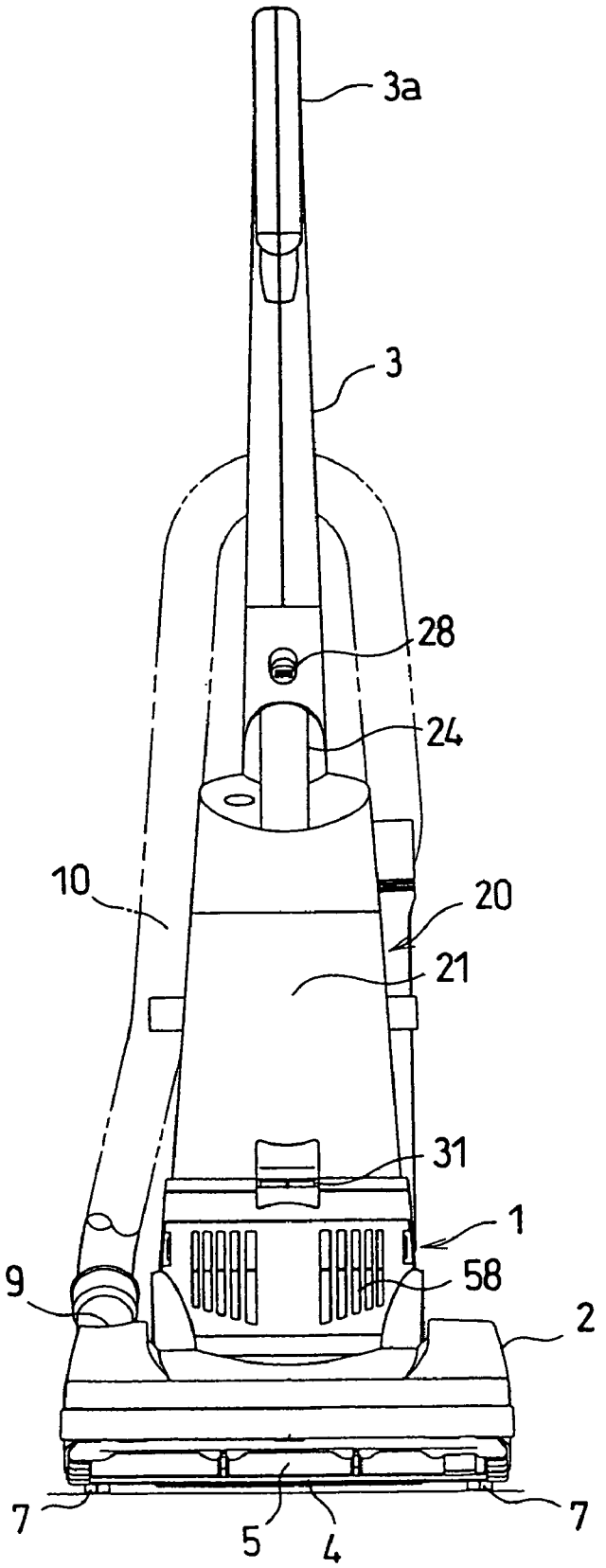

FIG. 2

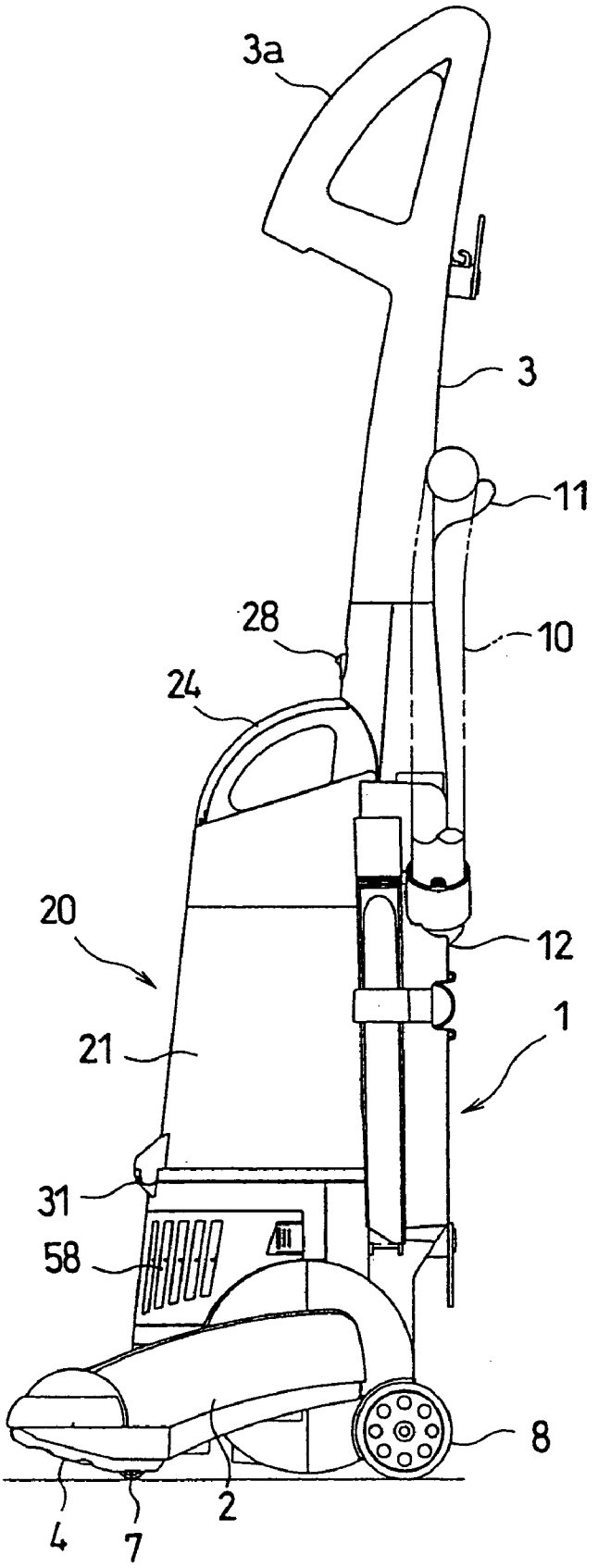

FIG. 3

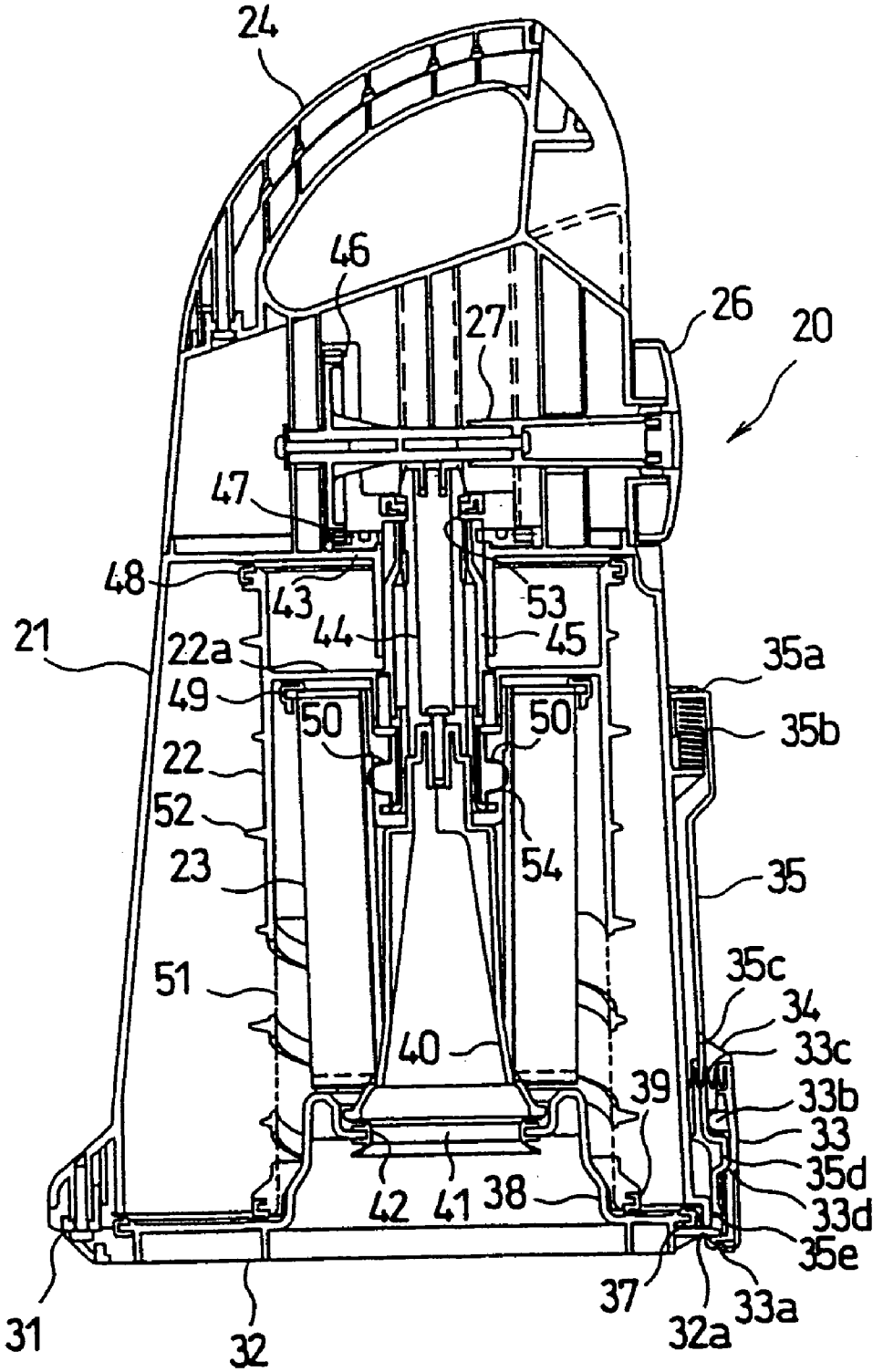
24
46
27
26
20
47
48
43
53
44
45
21
22a
35a
49
50
50
35b
22
52
54
23
35
51
35c
34
40
33c
39
33b
33
35d
42
41
38
33d
35e
37
33a
31
32
32a

FIG. 4

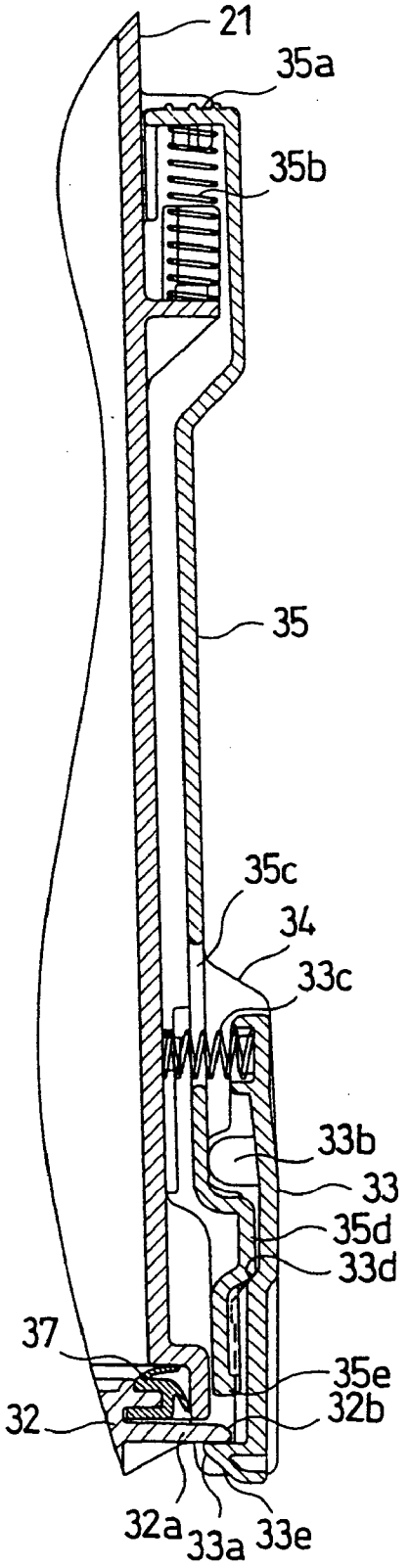

FIG. 5

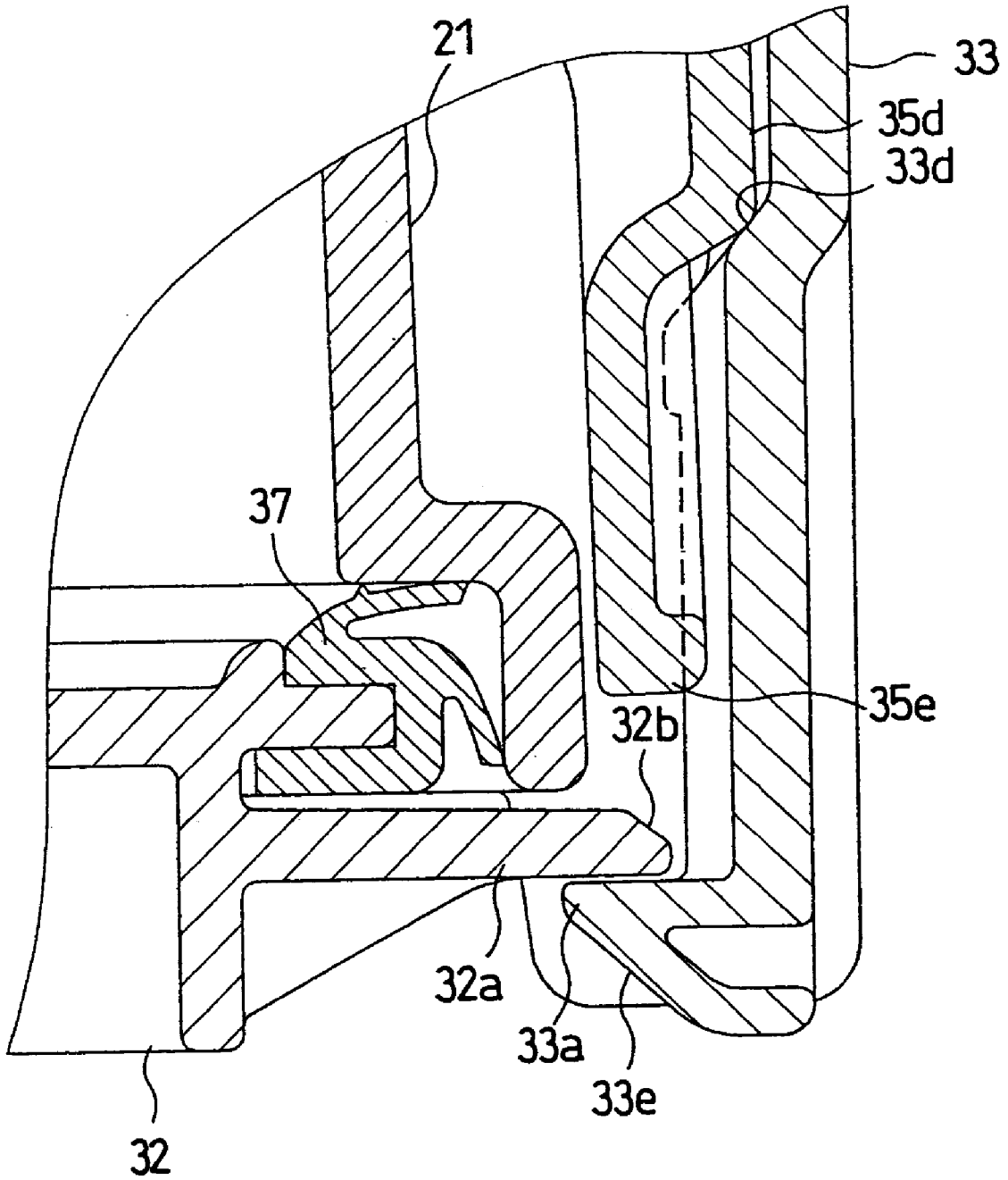

FIG. 6

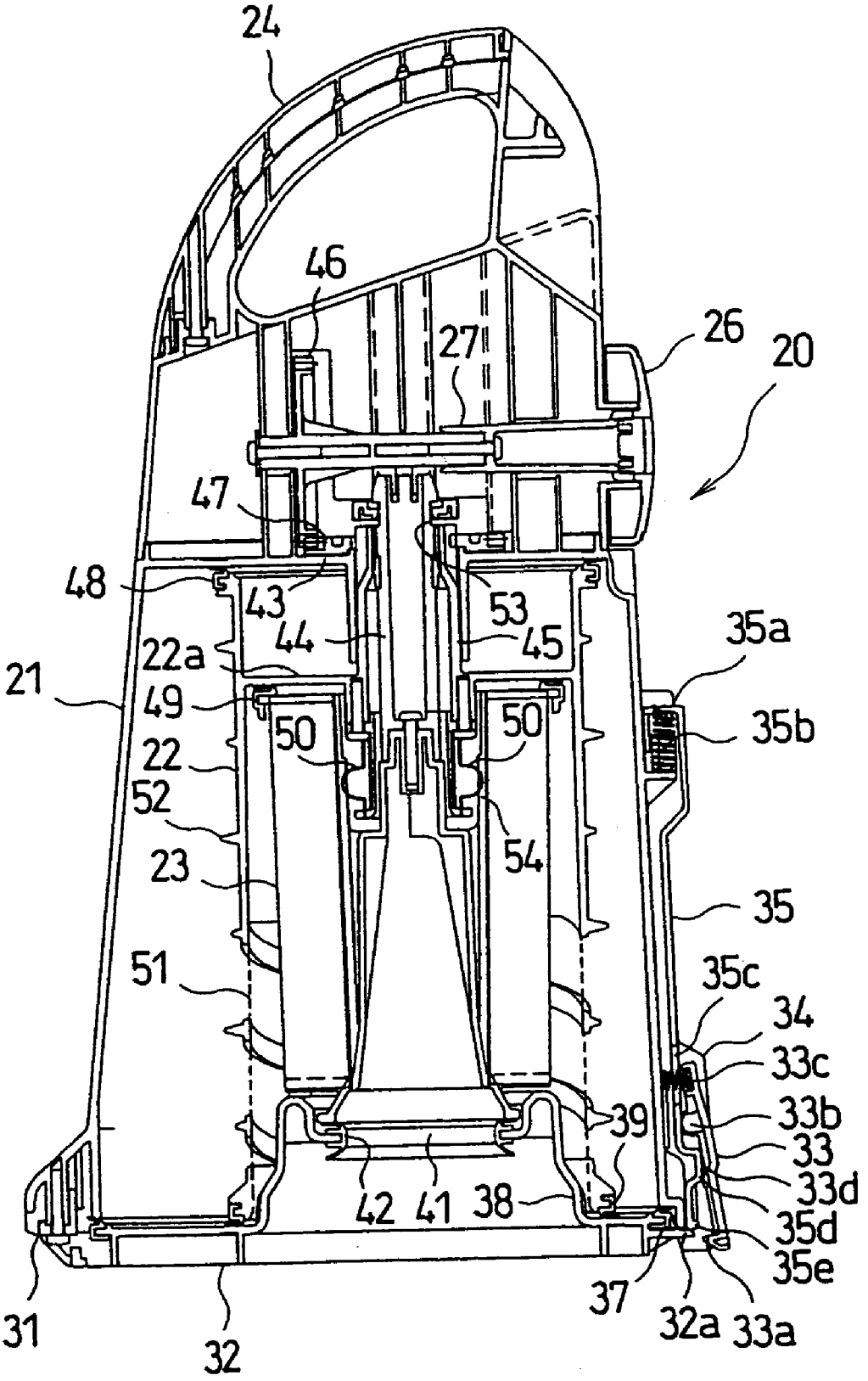
24
46
27
26
20
47
48
43
53
44
45
35a
22a
21
49
50
50
35b
22
52
54
23
35
51
35c
34
33c
39
33b
33
42
41
38
33d
35d
35e
37
32a
33a
31
32

FIG. 7

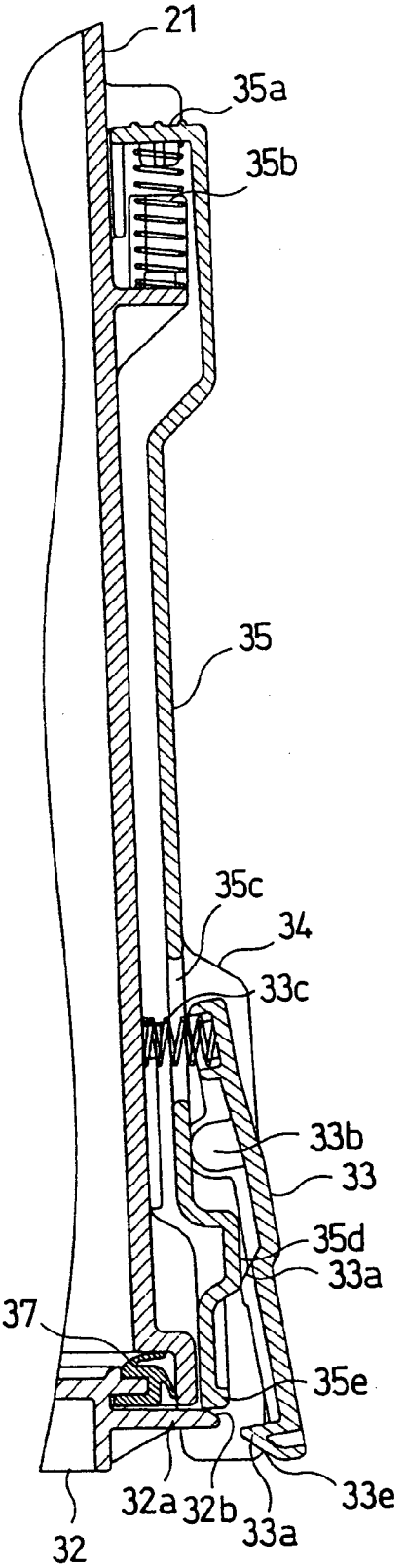

FIG. 8

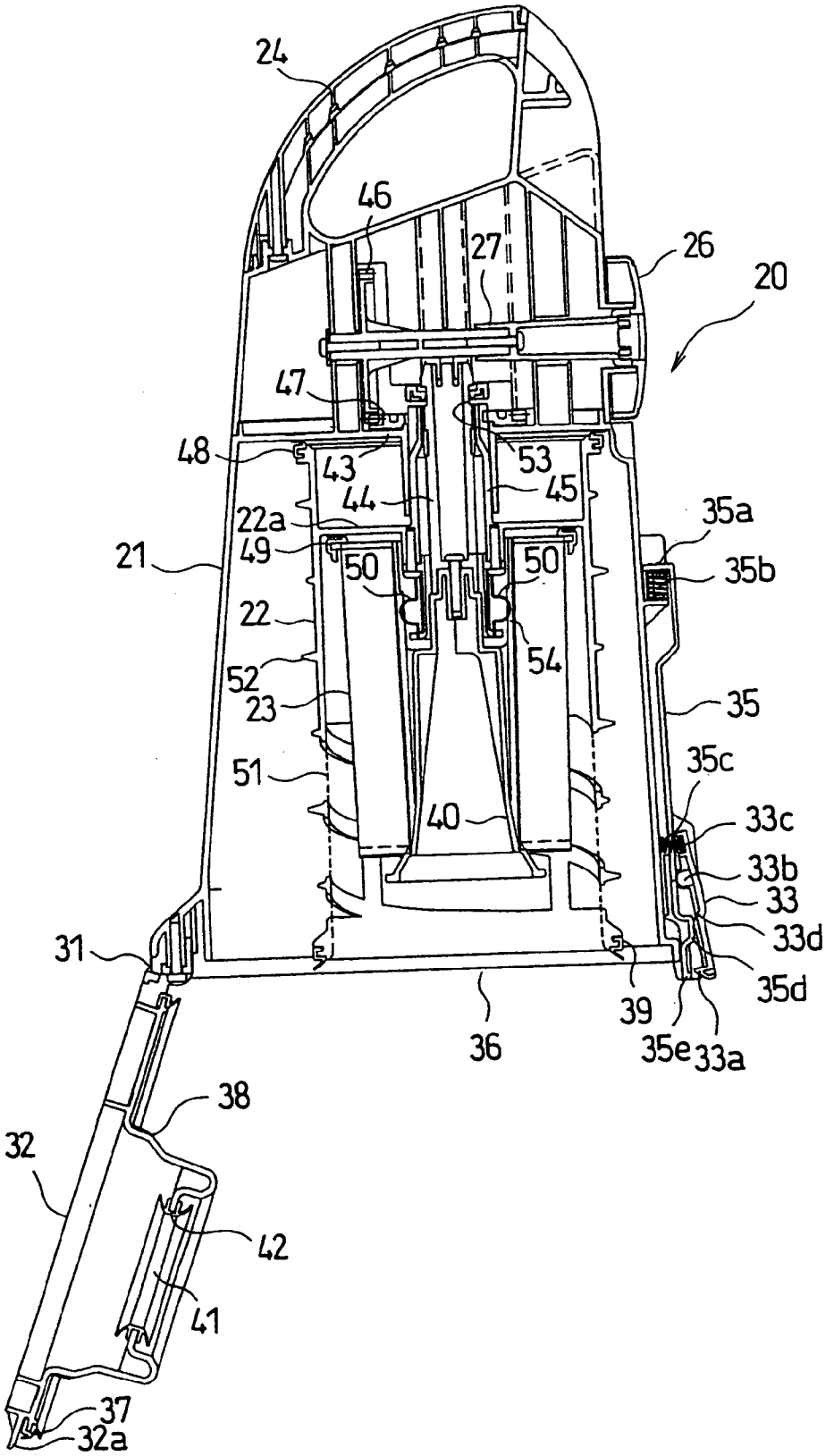
24
46
27
26
20
47
48
43
53
44
45
22a
35a
21
49
50
50
35b
22
54
52
23
35
51
35c
40
33c
33b
33
33d
31
35d
39
36
35e
33a
38
32
42
41
37
32a

FIG. 9

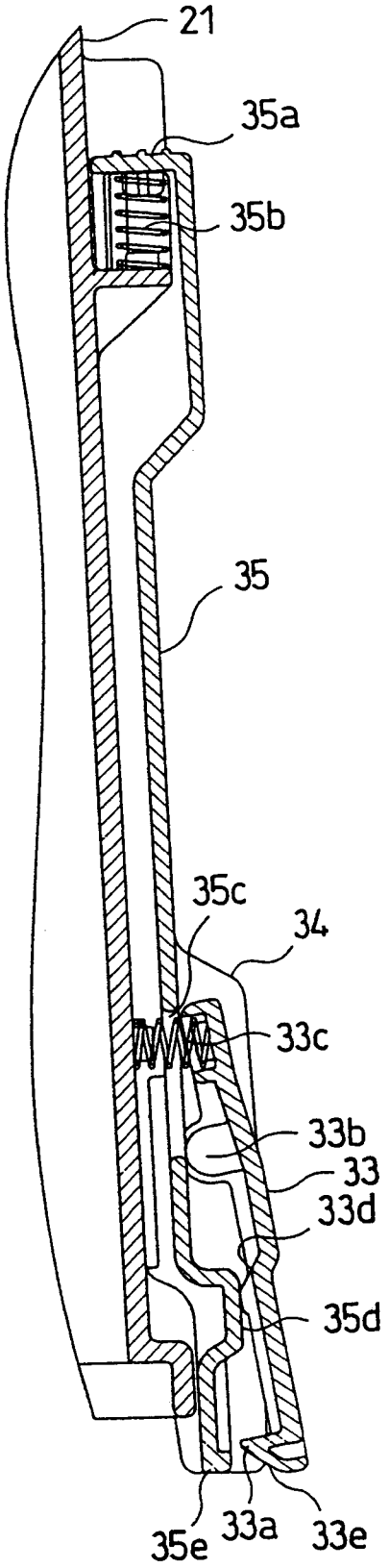

FIG. 10

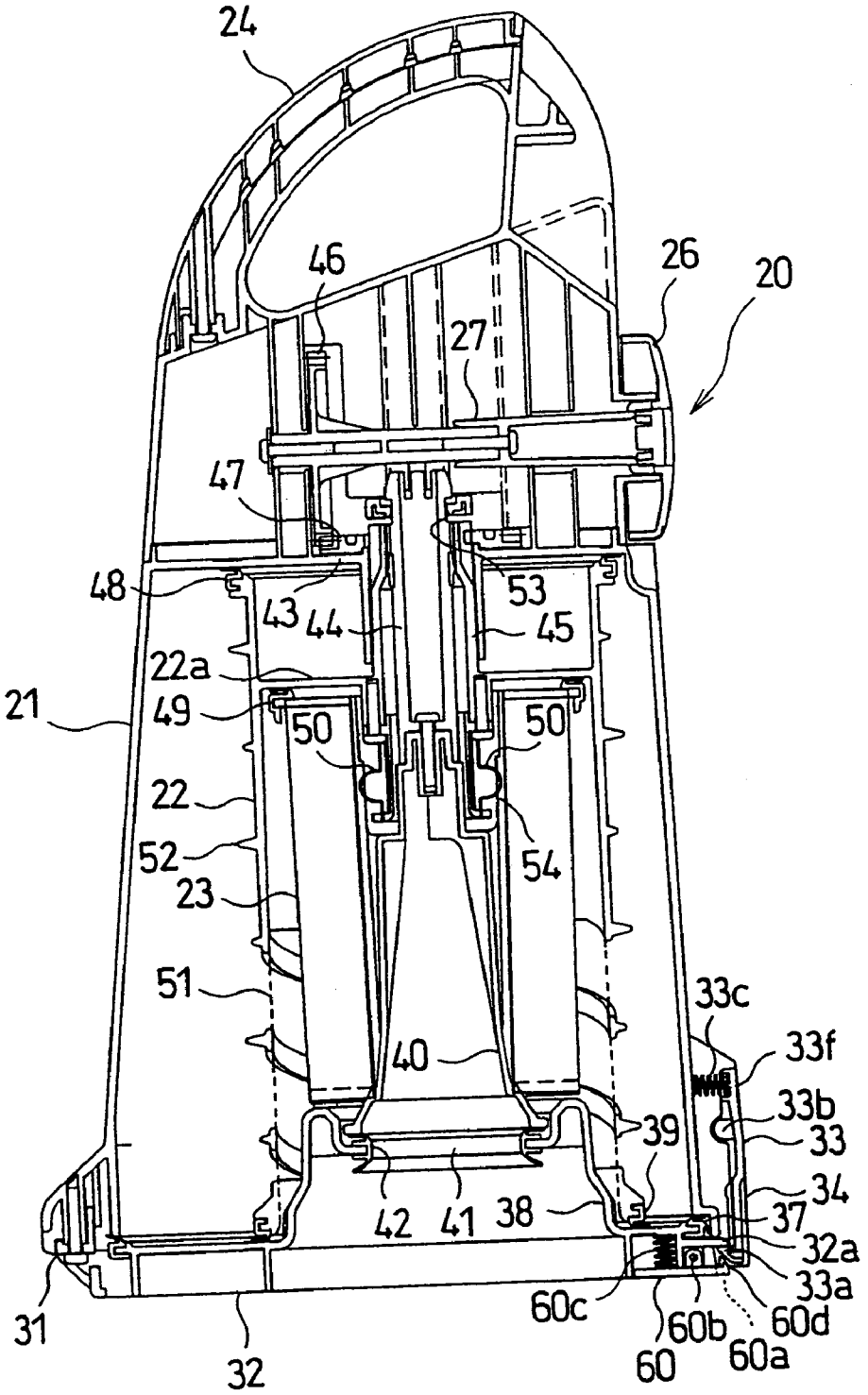
24
46
26
20
27
47
48
53
43
44
45
22a
21
49
50
50
22
52
54
23
51
33c
33f
40
33b
39
33
34
42
41
38
37
32a
33a
31
60c
60b
60d
32
60
60a

FIG. 11

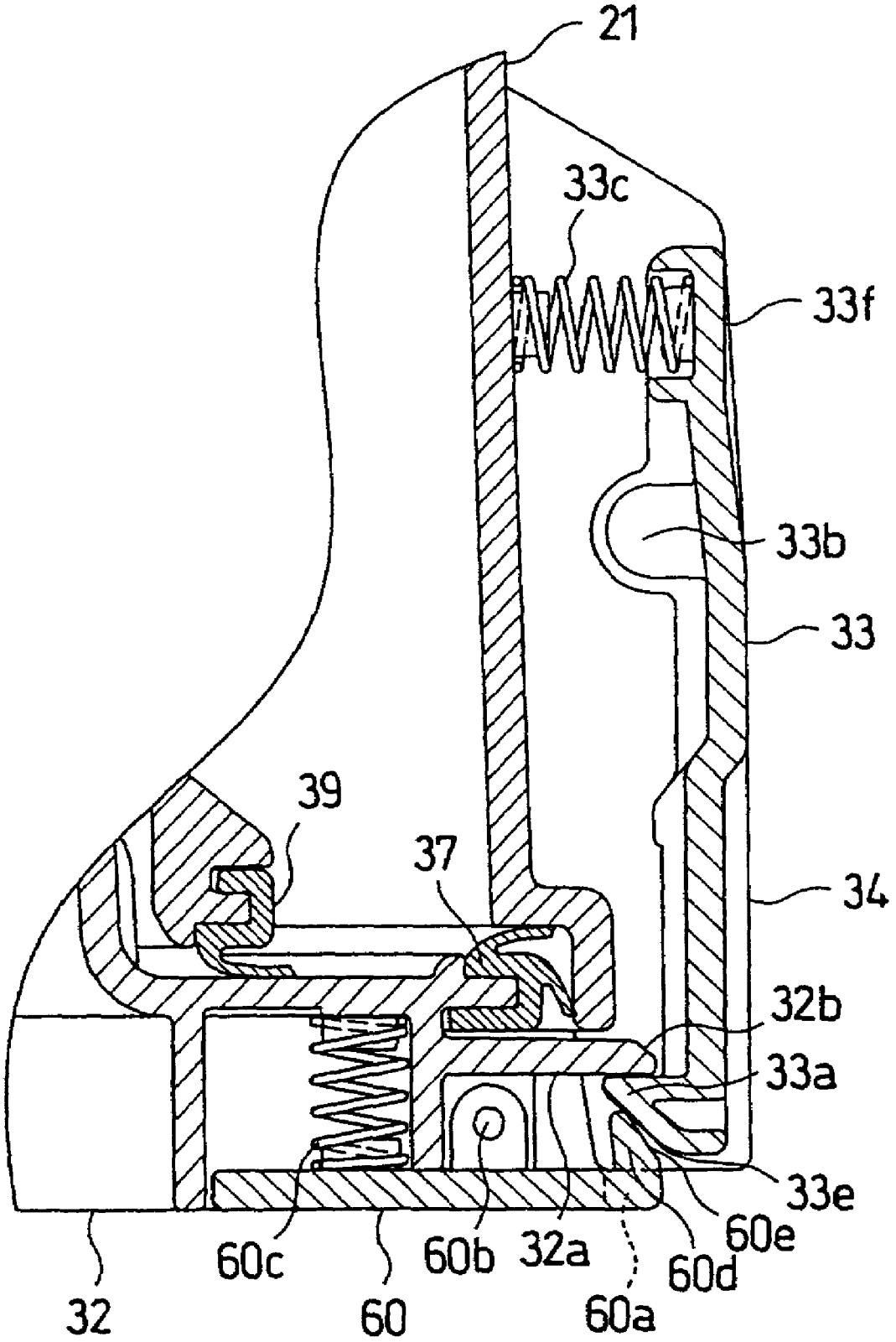
21
33c
33f
33b
33
39
37
34
32b
33a
33e
60e
60c
60b
32a
60d
32
60
60a

FIG. 12

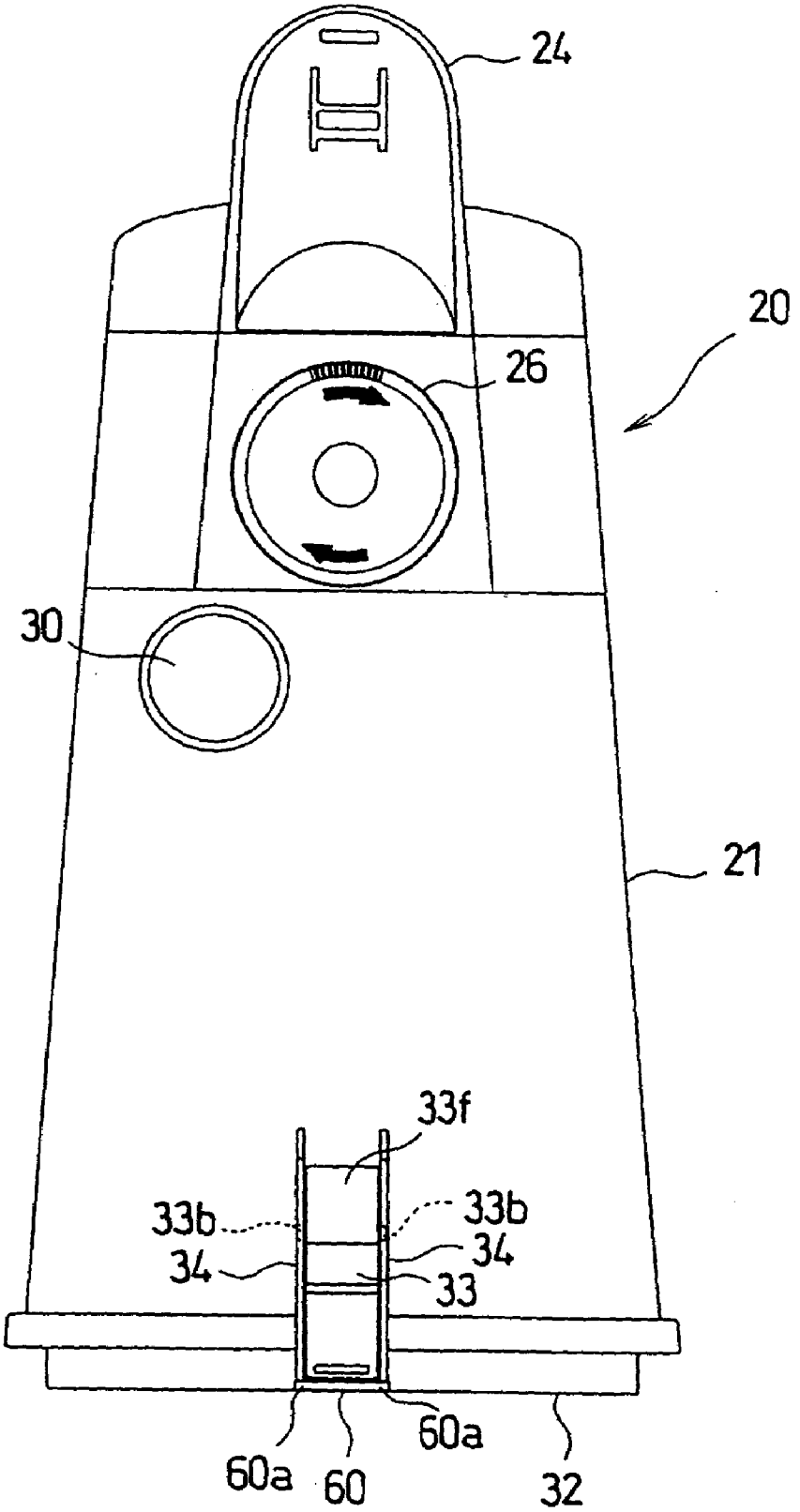

FIG. 13

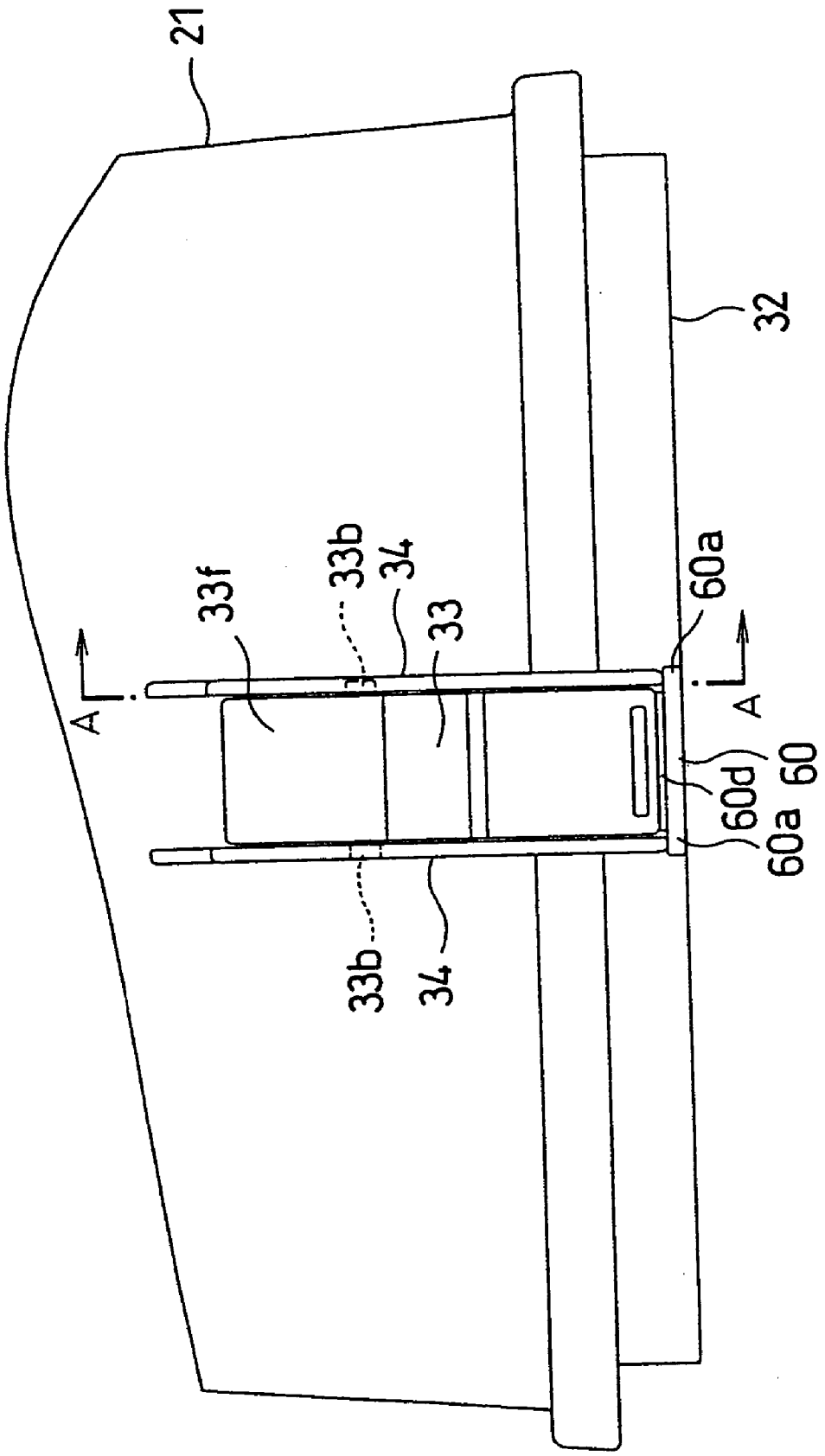

FIG. 14

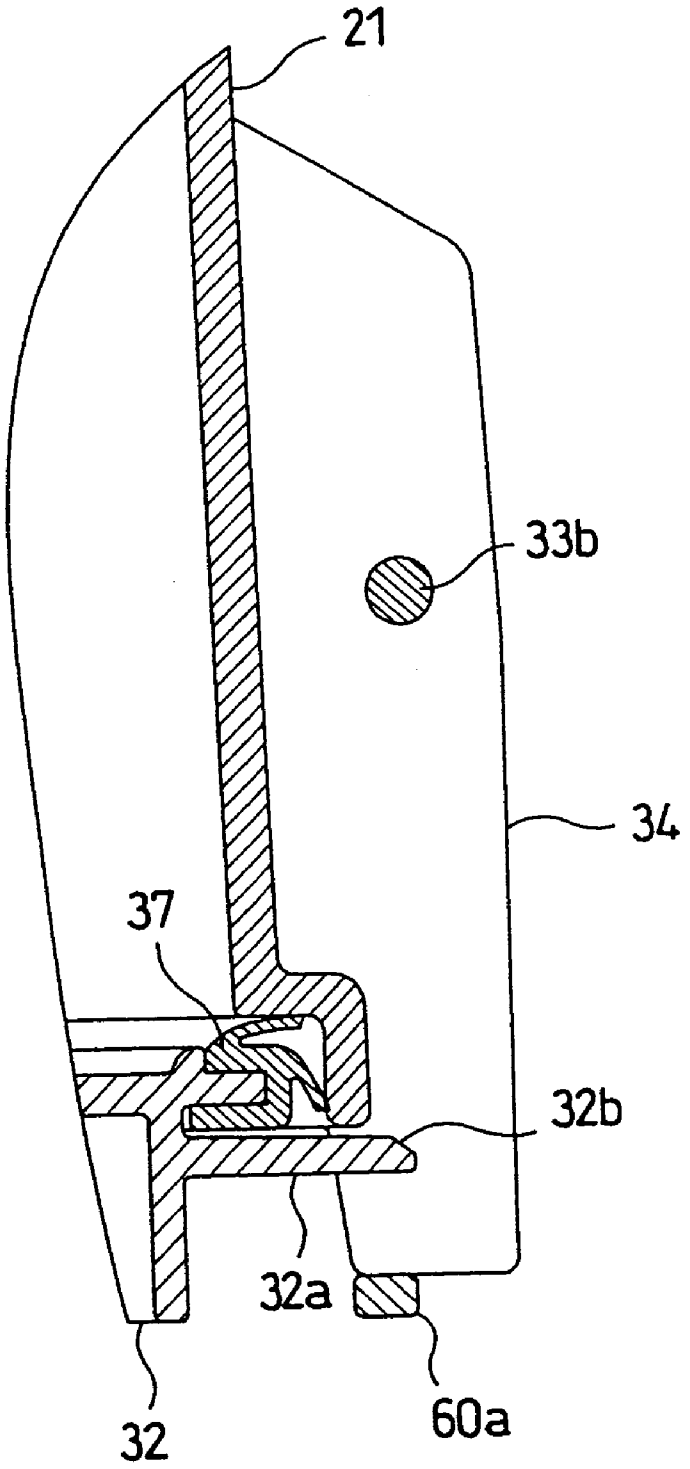

(SECTION ON A – A)

FIG. 15

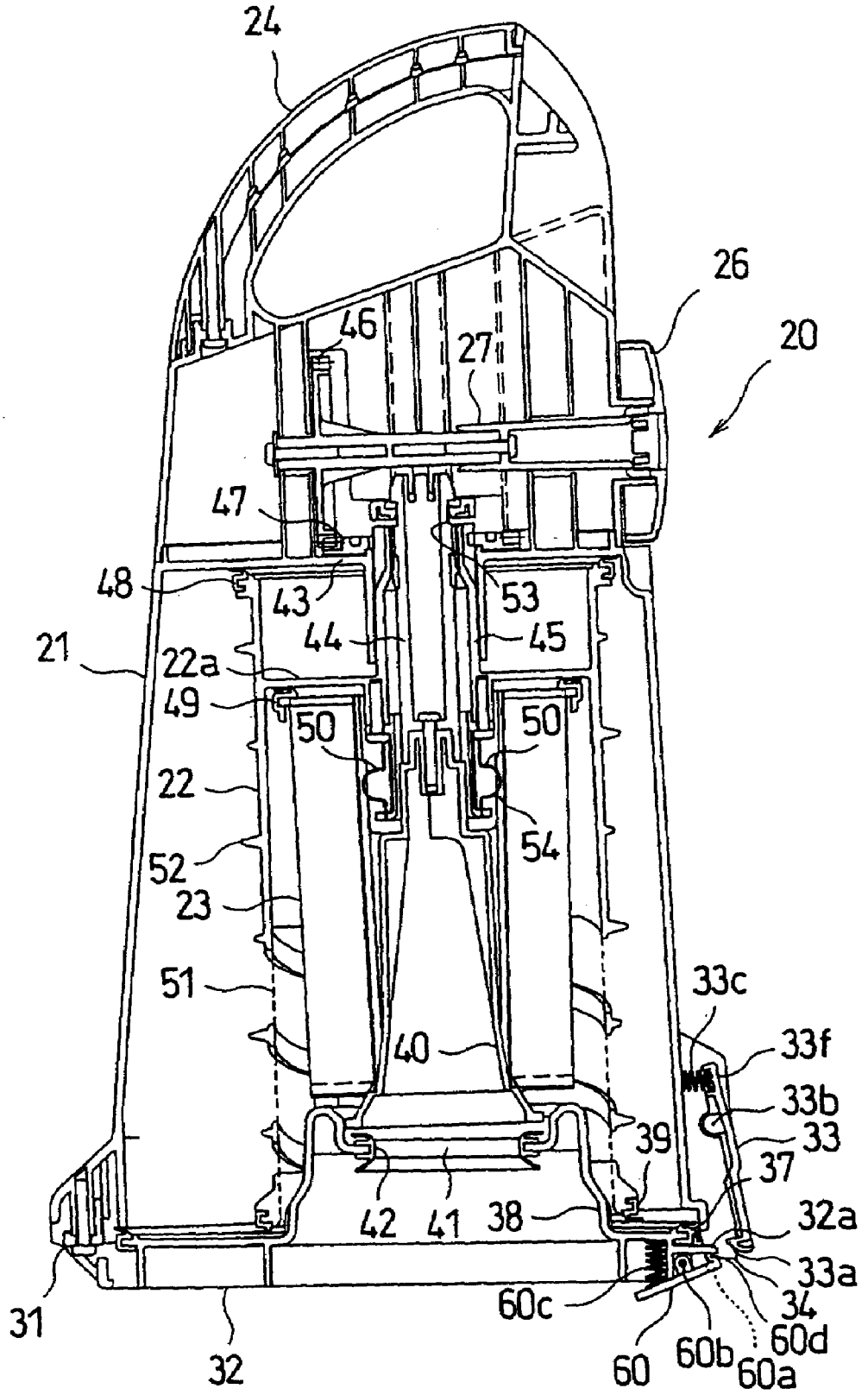
24
26
20
46
27
47
48
43
53
44
45
21
22a
49
50
50
22
54
52
23
51
33c
40
33f
33b
39
33
37
42
41
38
32a
33a
31
60c
34
60d
32
60
60b
60a

FIG. 16

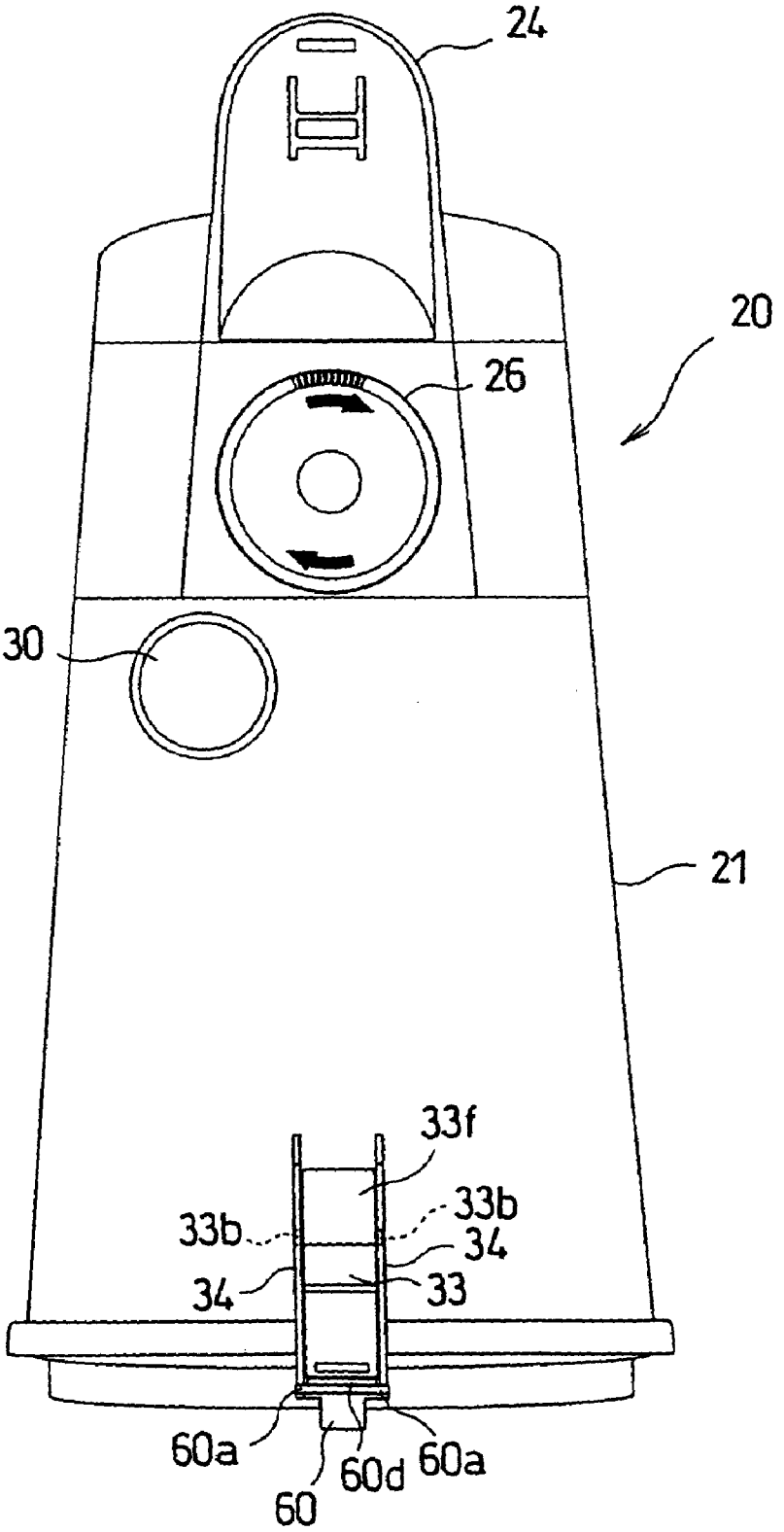

FIG. 17

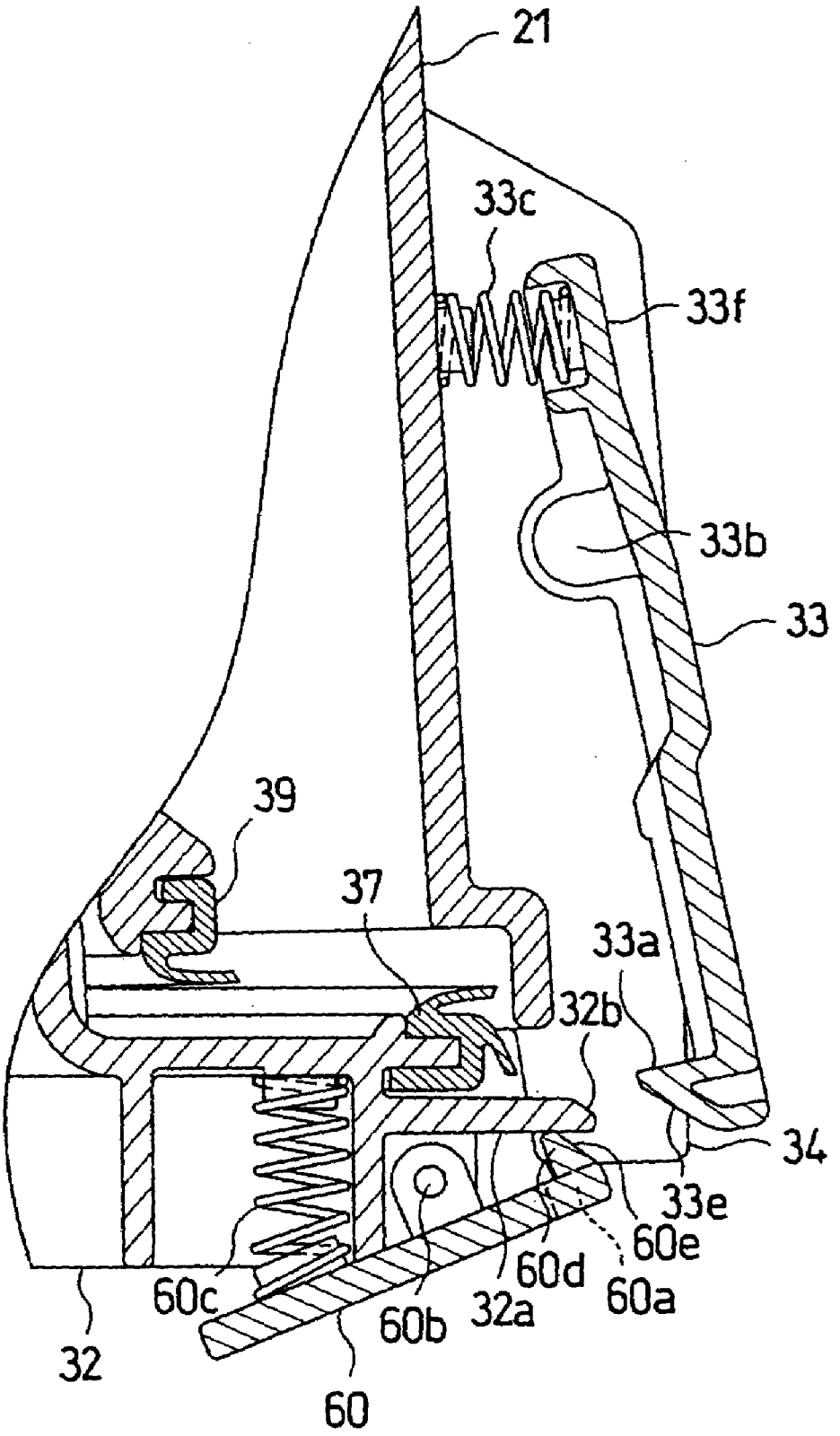
21
33c
33f
33b
33
39
37
33a
32b
34
33e
60e
60d
60a
60c
60b
32a
32
60

FIG. 18

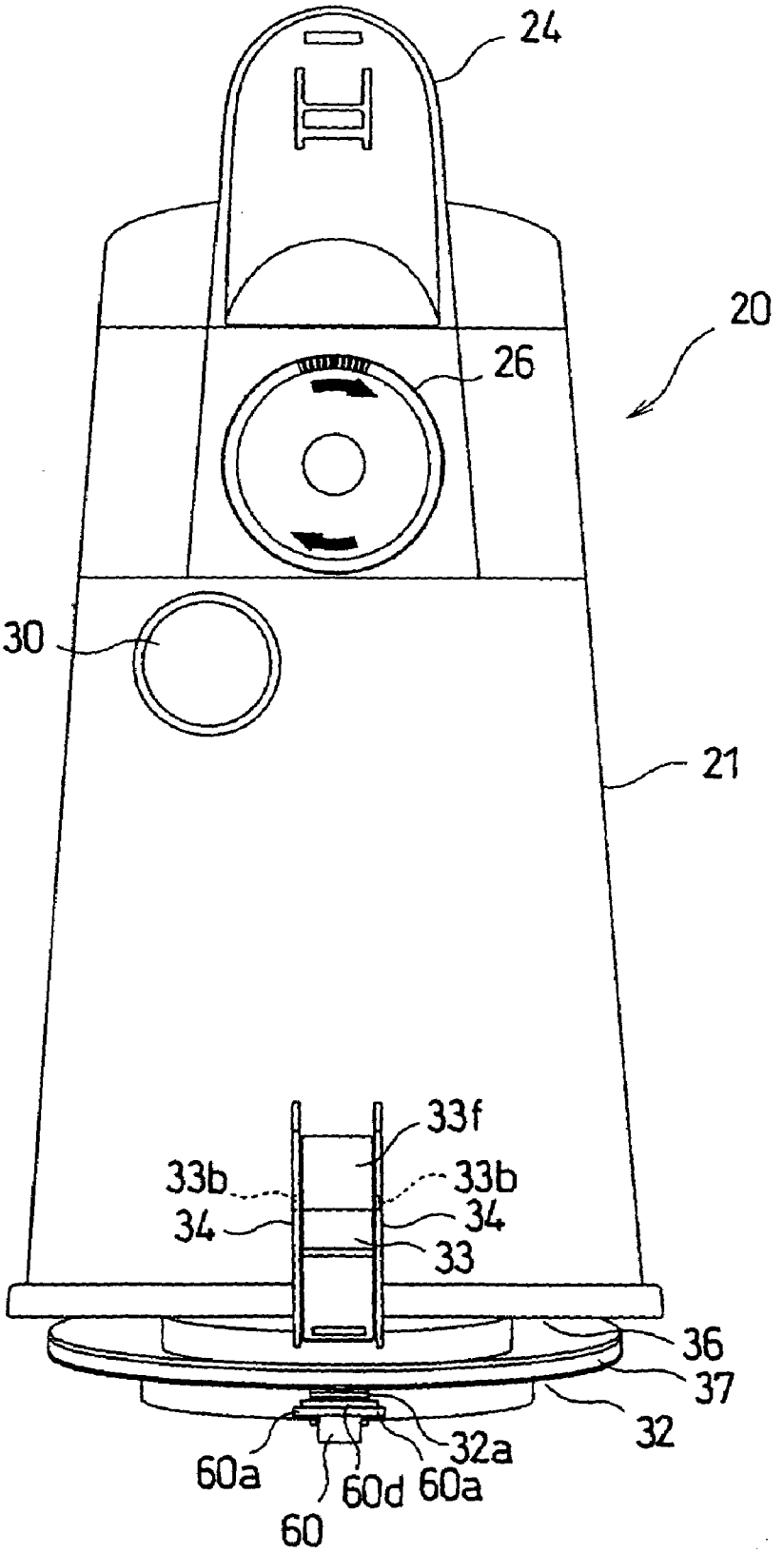

FIG. 19

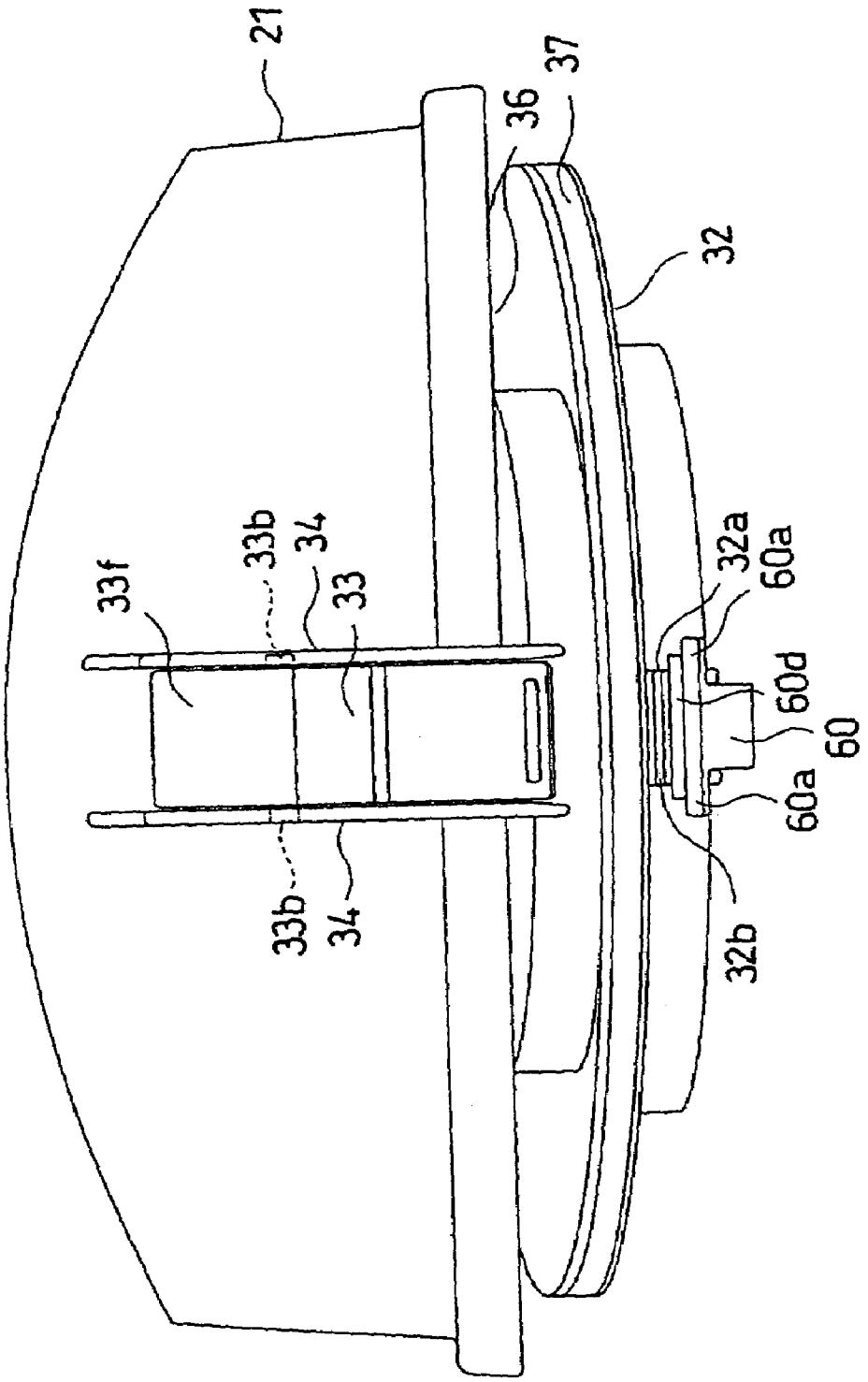

ELECTRIC VACUUM CLEANER EQUIPPED WITH A DUST COLLECTION UNIT

This application is a continuation of application Ser. No. 10/321,430, filed Dec. 18, 2002 now U.S. Pat. No. 7,014, 675.

FIELD OF THE INVENTION

The invention relates to an electric vacuum cleaner equipped with a dust collection unit, installed in a suction passage en route from a suction unit to an electric fan, the dust collection unit having a dust collecting case that can be opened by opening a lid member thereof to discharge the accumulated dust, and a lock mechanism for tightly locking the closed lid member.

BACKGROUND OF THE INVENTION

Some of conventional electric vacuum cleaners, especially upright (or vertical type) vacuum cleaners are equipped with a dust collecting case, detachably installed in a suction passage, for accumulating dust in a cylindrical filter fitted in the dust collecting case. The accumulated dust is removed by opening a lid of the dust collection unit. Such dust collection unit is economical as compared with a disposable paper bag in that the unit can be used semipermanently.

An example of this type of vacuum cleaners is disclosed in Japanese Patent Application Early Publication 2000-342492 (A47L 9/10).

In this cleaner, the lid of a dust collecting case is configured to be opened by the weight of the dust itself accumulated in the dust collecting case when a clamp hook locking the lid is unlocked.

This type of dust collection unit is provided with a packing for sealing the periphery of the lid to prevent leakage of dust. In order to enhance the sealing, the sealing pressure of the packing must be raised. However, if the sealing pressure is raised, movement of the lid will become heavy. Furthermore, as the amount of dust accumulated in the dust collecting case increases, the dust will be compacted on the inner wall of the dust collecting case, thereby failing to weigh on the lid. For these reasons, the lid will not always open by itself if the lid is unlocked by releasing the clamp hook, and, in that event, it must be forcibly opened by hand. This work is tedious and unsanitary.

SUMMARY OF THE INVENTION

In view of the problem pertinent to the prior art as mentioned above, the invention is directed to an improved dust collection unit.

It is an object of the invention to provide an electric vacuum cleaner equipped with a dust collection unit in which the lid of the dust collecting case can be opened without difficulty without any manual operation if dust is compacted on the inner wall of the case under a high sealing pressure and/or if the weight of the dust does not facilitate opening of the lid, the invention thereby allowing the user to avoid unsanitary job.

In accordance with an object of the invention above, there is provided an electric vacuum cleaner equipped with a dust collection unit detachably installed in the air suction passage of the cleaner en route from a suction unit to an electric fan thereof, said dust collection unit comprising:

a dust collecting case for accumulating dust sucked in said suction unit;

a lid member rotatably engaged with one end of said dust collecting case to serve as the bottom of said dust collecting case;

a lock mechanism for sealably locking said lid member onto the bottom of said dust collecting case;

a lid opening mechanism for forcibly opening said lid member in cooperation with said lock mechanism locking said lid member.

In this arrangement, the lid opening mechanism is capable of forcibly opening the lid in collaboration with the lock mechanism in the event that the lid does not open by itself when the dust is compacted on the inner wall of the dust collecting case. Hence, the user can avoid a troublesome and unsanitary job of opening the lid by hand. The lid can be opened without difficulty in a simple procedure.

In the inventive electric vacuum cleaner, the lock mechanism may be a clamp lever formed with a hook that can be hooked on the periphery of the lid member, and the opening mechanism can be a lid opening stick for disengaging the hook of the clamp lever from the lid member and pressing the periphery of the lid member downward.

With this relatively simple arrangement, aforementioned merits of the invention can attained.

Alternatively, while the lock mechanism may be a clamp lever formed with a hook that can be hooked on the periphery of the lid member, the lid opening mechanism may be a lid opening lever urged to push the dust collecting case. This arrangement also provides the same merits of the invention as described above.

The lid opening lever is preferably configured to push ribs formed on both sides of the clamp lever to support the fulcrum of the clamp lever.

In this way, the ribs can be effectively utilized not only as means for supporting the fulcrum of the clamp lever but also as the means for facilitating disengagement of the lid member. As a result, no new element is necessary on the dust collecting case. No new manipulation of the dust collecting unit is required. The improvement requires no significant manufacturing cost.

The lid opening lever may be provided with a protrusion located between the two ribs.

The protrusion facilitates correct positioning of the lid member on the dust collecting case following the discharge of dust.

BRIEF DESCRIPTION OF THE DRAWINGS

FIG. **1** is a front view of an upright electric vacuum cleaner according to the invention, which is equipped with a detachable dust collection unit mounted in the suction passage en route from a suction unit to an electric fan.

FIG. **2** is a side view of the upright electric vacuum cleaner shown in FIG. **1**.

FIG. **3** shows a sectional side elevation of a dust collection unit for use with the upright electric vacuum cleaner of the invention.

FIG. **4** is an enlarged sectional view of a main part of the lock mechanism and unlocking mechanism for use with the lid member of the dust collection unit shown in FIG. **3**.

FIG. **5** is an enlarged sectional view of a main part of the lock mechanism and unlock mechanism shown in FIG. **4**.

FIG. **6** shows a sectional side elevation of the clamp hook of the dust collecting case of the dust collection unit shown in FIG. **3**, showing a condition that the clamp hook is unhooked.

FIG. **7** shows an enlarged sectional view of a main part of the lock mechanism shown in FIG. **6**.

FIG. **8** shows a sectional side elevation of the dust collection unit of FIG. **3** with the lid member of the dust collection unit opened.

FIG. **9** shows an enlarged sectional side elevation of a main part of the lid member shown in FIG. **8**.

FIG. **10** shows a sectional side elevation of another dust collection unit for use with the upright electric vacuum cleaner of the invention.

FIG. **11** is an enlarged sectional view of the dust collection unit of FIG. **10**, showing in detail a main part of the lock mechanism and unlock mechanism.

FIG. **12** is a rear view of the dust collection unit shown in FIG. **10**.

FIG. **13** is an enlarged rear view of a main part of the dust collection unit shown in FIG. **12**.

FIG. **14** shows a cross section taken along line A—A of FIG. **13**.

FIG. **15** shows a sectional side elevation of the dust collection unit of FIG. **10** when the clamp hook is disengaged and the lid opening lever starts opening the lid member.

FIG. **16** is a rear view of the dust collection unit in the same condition as shown in FIG. **15**.

FIG. **17** is an enlarged sectional view of a main part of the dust collection unit shown in FIG. **15**.

FIG. **18** shows a rear view of the dust collection unit of FIG. **15**, with the lid member further opened.

FIG. **19** shows an enlarged rear view of the dust collection unit shown in FIG. **18**, showing in detail the main part of the dust collection unit.

DETAILED DESCRIPTION OF THE PREFERRED EMBODIMENT

Referring to FIGS. **1**–**9**, a first preferred embodiment of the invention will now be described in detail below. The first embodiment of the invention is an upright electric vacuum cleaner as shown in FIGS. **1** and **2**. In this embodiment, the cleaner has a main body **1**, a suction unit **2** provided beneath the main body **1** for sweeping a floor, and a manipulation handle **3** provided on top of the main body **1** for maneuvering the main body. The manipulation handle **3** extends upward from the back of the main body **1**, and is provided at the top end thereof with a generally triangular grip section **3***a*, which protrudes forward.

The suction unit **2** has a suction port **4** facing the floor, and a rotary brush **5** facing the suction port **4**. The rotary brush **5** is installed in the lower section of the main body **1**, and operably connected to the shaft of a built-in electric fan (not shown) by means of a belt for example. Mounted on the opposite sides of the front end of the suction unit **2** are a pair of right and left front wheels **7**, and on the rear of the lower end of the main body **1** are a pair of right and left rear wheels **8**.

Formed on one side of the back of the suction unit **2** is a hose connector **9** that communicates at the lower end thereof with the suction port **4**. One end of a hose **10** is detachably connected to the hose connector **9**. The hose **10** extends over the back of the main body **1**, via a holder section **11** provided on the back of the manipulation handle **3**, to a suction cylinder **12** provided on one side of the back of the main body **1**.

On the other hand, a dust collection unit **20** of the invention is detachably mounted on the central front section of the main body **1**.

The dust collection unit **20** includes a cylindrical pre-filter **22** installed inside a cylindrical dust collecting case **21** made of a transparent resin, and a generally cylindrical main filter **23** inside the pre-filter **22** as sown in FIG. **3**.

The dust collecting case **21** has an upper end which is inclined forward when the dust collecting case **21** is installed on the main body **1**. Formed on the inclined upper end of the dust collecting case **21**, and below the manipulation handle **3**, is an arcuate hand grip **24** as shown in FIGS. **1** and **2**.

On the back of the dust collection unit **20** is a rotary handle **26** for rotating the pre-filter **22**. In the example shown herein, the rotary handle **26** has a form of a cap and is hidden and cannot be seen or touched from outside when the unit **20** is mounted on the main body **1** so that the handle **26** cannot be unintentionally operated by children.

The dust collecting case **21** is provided with a suction port (not shown), which, when mounted on the main body **1**, communicates to an opening of a suction cylinder **12** via a packing or a seal. The suction cylinder is mounted on the back of the main body **1**, offset to one side of the back. (This suction port is shown in the second embodiment by a reference numeral **30**.) Because the suction port of the dust collecting case **21** is offset from the center of the dust collecting case **21**, dust-containing air sucked from the suction port is set in a whirlpool motion inside the dust collecting case **21**.

Rotatably mounted on the bottom of the dust collecting case **21** is a lid member **32** via a hinge **31** (or a fulcrum **31** for opening and closing the lid member). A clamp lever **33** is formed on the lower section of the dust collecting case **21**. The closed lid member **32** can be locked by hooking up the clamp hook **33***a* formed on the lower end of the clamp lever **33** on an extended peripheral portion **32***a* of the lid member **32**.

The clamp lever **33** has a fulcrum **33***b* which is rotatably mounted on two ribs **34** formed on the opposite sides of the clamp lever **33**. Mounted at the upper end of the fulcrum **33***b* is a coil spring **33***c* for urging a hook **33***a* at the lower end of the fulcrum **33***b* towards the lid member **32**.

In the embodiment shown herein, a lid opening stick **35** is slidably mounted between the clamp lever **33** and the dust collecting case **21** so that it can be freely moved in the vertical direction. A coil spring **35***b* is mounted at an upper manipulatory section **35***a* of the lid opening stick **35** to urge the lid opening stick **35** upward. The lid opening stick **35** is provided with a vertically elongated hole **35***c* formed at a position of the coil spring **33***c* such that the lid opening stick **35** will not abut on the coil spring **33***c* while moving up and down.

Formed below the fulcrum **33***b* of the clamp lever **33** is an outward protrusion **35***d* in correspondence with an inwardly inclined facet **33***d* formed on the clamp lever **33**, so that when the lid opening stick **35** is pushed downward, outward protrusion **35***d* abuts on the inwardly inclined facet **33***d* of the clamp lever **33** to push the inclined facet **33***d* downward, thereby disengaging a clamp hook **33***a* from the extended portion **32***a* of the lid member.

The leading end **35***e* of the lid opening stick **35**, when pushed down, abuts on the extended portion **32***a* of the lid member **32**, thereby pushing it down, and forcibly opens the lid member **32** to thereby liberate it from the clamp hook **33***a*. This causes the dust outlet **36** of the dust collecting case **21** to be opened as shown in FIG. **8**. The extended portion **32***a* of the lid member **32** has an upper inclined facet **32***b* in correspondence with the inclined facet **33***e* of the clamp hook **33***a* so that the lid member **32** can be closed without manipulating the clamp lever **33**. When the outward protru-

sion **35***d* is pushed down, it is inwardly pushed by the clamp lever **33**, the leading end **35***e* of the lid opening stick **35** pushes down the extended portion **32***a* without sliding on the inclined facet **32***b* of the extended portion **32***a*.

Mounted on the periphery of the lid member **32** is a packing **37** to seal the opening of the dust collecting case **21**. Formed on the upper face of the lid member **32** is a protruding section **38** that can fit in the inner periphery of the lower opening of the pre-filter **22** so as to prevent transverse vibrations of the pre-filter **22**. A packing **39** is provided on the open end of the pre-filter **22** for keeping the open end of the pre-filter **22** in tight contact with the upper surface of the lid member **32**.

A suction port **41** is formed inside the top end of the protruding section **38** of the lid member **32**. The suction port **41** is connected to the lower end of a cylindrical member **40**, which forms an air passage for directing air from the main filter **23** to the exterior of the dust collecting case **21**. A packing **42** is mounted on the inner periphery of the suction port **41** to keep the open end of suction port **41** and the cylindrical member **40** of the main filter **23** in sealing contact.

The main filter **23** is mounted on the top plate **43** of the dust collecting case **21** by means of a mounting shaft **44** that protrudes from the center of the main filter **23**. A cylindrical hollow shaft **45** of the pre-filter **22** is mounted on the mounting shaft **44**, extending between the top plate **43** of the dust collecting case **21** and the main filter **23**.

Mounted on the upper end of the cylindrical hollow shaft **45** of the pre-filter **22** is an annular gear **47** that engages with an disk-shaped gear **46** mounted on the rotary shaft **27** of the rotary handle **26**. Thus, rotation of the pre-filter **22** will cause the rotation of the rotary handle **26** in a predetermined direction. By forming a simple mechanism for rotating the pre-filter (the mechanism hereinafter referred to as pre-filter rotating mechanism) in this way, the pre-filter **22** can be firmly rotated. Mounted on the outer peripheries of the upper ends of the pre-filter **22** and the main filter **23** are packings **48** and **49**, respectively, to keep the pre-filter **22** in tight contact with an upper partition plate **22***a* and the main filter **23** in tight contact with the top plate **43** of the dust collecting case **21**, so as to prevent dust from entering the pre-filter rotating mechanism described above.

Resilient protrusions **50** are formed under the cylindrical hollow shaft **45** of the pre-filter **22**. The resilient protrusions **50** abut on the plait tips formed on the inside of the main filter **23** as described later. With this arrangement, the resilient protrusions **50** are rotated together with the cylindrical hollow shaft **45** to prick the plait tips of the main filter **23**, facilitating efficient removal of dust from the filter.

The lower section **51** of the pre-filter **22** is meshed for filtering larger pieces of dust. Because the meshed filter **51** is provided in the lower section of the dust collecting case **21**, dust sucked in together with the air from a suction port (not shown) provided at an upper section of the dust collecting case **21** is forced to whirl downward at a high speed, and compacted on the bottom of the dust collecting case **21**.

Formed on the external circumference of the pre-filter **22** are spiral ribs **52** that generally extend in the vertical direction. The ribs **52** are configured to push the dust accumulated and compacted in the dust collecting case **21** towards the dust outlet **36** of the lid member **32** when the rotary handle **26** is turned in the clockwise direction.

The main filter **23** is a plaited cylindrical paper filter surrounding the cylindrical member **40** serving as an air passage for the filtered air. The mounting shaft **44** fixed on the upper central section of the main filter **23** is fitted in a mounting bore **53** formed in the top plate **43** of the dust collecting case **21** in such a way that the mounting shaft **44** will not be rotated with the rotary pre-filter **22**.

The tips of the plait inside the main filter **23** are covered with a plastic resin member **54** to prevent them from being worn by the friction with the rotating resilient protrusions **50** formed on the lower section of the cylindrical hollow shaft **45** of the pre-filter **22**.

The clean air filtered by the dust collection unit **20** is discharged from the suction port **41** (of the dust collecting case **21**) located below the cylindrical member **40** of the main filter **23**. The air is then sucked into an electric fan (not shown), and exhausted, via an exhaust filter (not shown), from an outlet **58** formed in the lower front end of the main body **1**.

In the upright vacuum cleaner of the invention as described above, dust on the floor is scratched by the rotary brush **5** of the suction unit **2** and enters the dust collecting case **21** through the hose **10** and the suction cylinder **12** positioned offset from the center of back of the main body **1**. The dust is whirled downward along the inner wall of the dust collecting case **21**. Larger pieces of dust accumulate on the bottom of the dust collecting case **21**.

Since the mesh **51** of the pre-filter **22** is located in the lower section of the dust collecting case **21**, dust sucked together with the air from the upper suction port is forcibly whirled downward, causing the dust to be accumulated and compacted on the bottom of the lid member **32** of the dust collecting case **21**, as previously described. This compaction effect is significant especially when dust is cotton refuse. The compression rate is larger several fold, as compared with a conventional cyclone type separator. Because of such large compaction rate, the dust collection unit of the invention is capable of collecting a large amount of dust per unit volume.

On the other hand, fine dust enters inside the pre-filter **22** via the mesh **51** provided below the pre-filter **22**, and is filtered by the plaited main filter **23**. As a consequence, only clean filtered air is passed down to the electric fan and exhausted from the outlet **58**.

As described above, in the dust collection unit **20** of the invention, the cylindrical pre-filter **22** is provided with resilient protrusions **50** formed at the lower end of the cylindrical hollow shaft **45** so as to prick the tips of the plait inside the main filter **23**. In addition, spiral ribs **52** are provided on the exterior of the pre-filter **22**. The cylindrical hollow shaft **45** of the pre-filter **22** is operably connected to the rotary handle **26** via the gears **46** and **47**.

Consequently, when the rotary handle **26** is rotated in one (arbitrary) direction, the pre-filter **22** is rotated in a corresponding direction by means of the gears **46** and **47** and the cylindrical hollow shaft **45**. As the pre-filter **22** is rotated, the resilient protrusions **50** located on the lower section of the shaft **45** prick the tips of the plait (resin member **54**) inside the main filter **23**, causing vibrations therein, which in turn causes fine dust accumulating on the surface of the main filter **23** to fall off. Large-sized pieces accumulating in a compacted form in the dust collecting case **21** sweep fine dust which is sticking to the outer surface of the pre-filter **22**. Accordingly, lowering of dust collecting efficiency of the dust collection unit caused by accumulation of dust on the main filter **23** and pre-filter **22** may be effectively prevented.

As the large-sized dust pieces or trash accumulates in the dust collecting case **21**, the mesh **51** formed below the pre-filter **22** can be gradually clogged. In the event that clogging has taken place, the dust collection unit **20** is once disengaged from the vacuum cleaner, and by rotating the

rotary handle **26**, and hence the pre-filter **22**, to move the spiral ribs **52** formed thereon up and down, gaps (air passage) can be formed between the mesh **51** and the trash, that prevents lowering of dust collection efficiency of the filter.

On the other hand, to remove the dust accumulated in the dust collecting case **21**, the hand grip **24** of the dust collecting case **21** is withdrawn by hand while pressing the button **28** provided on the hand grip **24**. This permits the dust collecting case **21** to be disconnected from the main body **1**.

If the manipulatory section **35***a* of the lid opening stick **35** is forced down as shown in FIGS. **6** and **7**, the outward protrusion **35***d* formed on the lower end of the lid opening stick **35** abuts against the inwardly inclined facet **33***d* of the clamp lever **33**, causing the inwardly inclined facet **33***d* to recede outward, thereby rotating the clamp lever **33** away from the extended portion **32***a* of the lid member **32** and disconnecting the clamp hook **33***a* of the clamp lever **33** from the extended portion **32***a*. If the manipulatory section **35***a* is further forced down, the leading end **35***e* of the stick **35** abuts on the extended portion **32***a* and pushes it down, causing the lid member **32** to be forcibly opened as shown in FIG. **8**. Now, the dust accumulated in the dust collecting case **21** can be removed from the dust collecting case **21**.

Thus, if the sealing pressure of the packing **37** is increased to enhance sealability of the lid member **32** or if the compacted dust in the dust collecting case **21** sticks to the inner wall of the dust collecting case **21**, not weighing on the lid member **32**, the lid member **32** can be easily and securely opened without manually opening it by hand, thereby permitting the user to avoid laborious and unsanitary operations of opening the lid member **32**.

It is noted that although the lid member **32** can be easily opened, cotton refuse in particular does not come off the inner wall of the dust collecting case **21** when it is compacted on the wall. In this case, the spiral ribs **52** provided on the exterior of the pre-filter **22** may be operated to push the compacted dust such as cotton refuse outward. This facilitates easier removal of the sticking dust. This can be done by turning the rotary handle **26** to rotate the pre-filter **22** in a predetermined direction (right in the example shown).

Since the hinge **31** of the lid member **32** (or fulcrum for opening the lid member) is provided on the same side as the hand grip **24** of the dust collecting case **21**, the lid member **32** can prevent removed dust from coming unexpectedly close to the user or splashing to the user when the hand grip **24** is held and the lid member **32** is opened (FIG. **8**).

Every time dust is removed, dust cleaning function of the pre-filter is executed by the rotation of the pre-filter **22**, so that lowering of dust collecting efficiency of the filter is prevented if the user is not cognizant of cleaning the filter.

As described above, a vacuum cleaner in accordance with the embodiment described above provides an economic advantage that, unlike conventional cleaners, it can be used semipermanently without any replacement of disposable paper bag. In addition, the usability of the dust collection unit is greatly improved to that of a disposable type unit or more than that.

The upright dust collection unit **20** may have a sufficient inner volume that it is especially suitable for a heavy duty upright vacuum cleaner.

An upright vacuum cleaner of the invention is provided with a generally triangular protruding grip **3***a* formed on top of the manipulation handle **3** that extends upward from the back of the main body **1**, as shown in FIG. **3**. Hence, the grip section **3***a* provides the user with convenience that he needs not to stoop over the cleaner while cleaning, for example, the floor under a bed if he inclines the cleaner through a large angle, since he can then keep the grip section **3***a* at a convenient height.

FIGS. **10**–**19** show further embodiments of the invention, in which the same reference numerals refer to the same components as before. The main body **1** is the same as the preceding one shown in FIGS. **2** and **3**. The dust collecting case **21** is provided in the back thereof with a suction port **30** offset to one side of the back as shown in rear views of FIGS. **12**, **16**, and **18**. The suction port **30** communicates to the suction cylinder **12** of the main body **1** when they are air-tightly connected together.

A unique feature of this embodiment is that the lid member **32** has a special opening mechanism. The rest of the features of the embodiment are the same as those of the preceding ones.

As compared with the preceding lid opening mechanism in which the lid opening stick **35** is formed on the dust collecting case **21**, this lid opening lever **60** is provided on the lid member **32**.

The lock mechanism has a clamp lever **33** attached to one side of the dust collecting case **21** opposite the hinge **31** of the lid member **32** (or fulcrum for opening the lid member), and having a hook **33***a* to be hooked on the extended portion **32***a* formed on the fringe of the lid member **32**, like a preceding embodiment. However, the lid opening mechanism is provided with a lid opening lever **60** which is mounted on the underside of the lid member **32** in correspondence with the clamp lever **33**, opposite the hinge **31**, and is urged to push the underside of the dust collecting case **21**.

The lid opening lever **60** is provided at one end thereof with pushing sections **60***a* that protrude from the opposite sides of said one end to push the lower ends of the ribs **34** supporting the fulcrum **33***b* of the clamp lever **33**, as shown in FIGS. **12**–**14**. The lid opening lever **60** is urged by a coil spring **60***c* mounted on the other end of the fulcrum **60***b* of the lever **60** so as to push the lower ends of the ribs **34** against the upper pushing sections **60***a*.

In addition, the lid opening lever **60** is provided at the tip thereof with a protrusion **60***d* located between the two ribs **34**. The facet **60***e* of the protrusion **60***d* facing an inclined facet **33***e* of the clamp hook **33***a* is correspondingly inclined so as not to hinder locking operation of the clamp hook **33***a*, as shown enlarged in FIG. **11**.

In the arrangement described above, in order to discharge the accumulated dust from the dust collecting case **21**, the upper section **33***f* of the clamp lever **33** is pushed to disengage the clamp hook **33***a* at the lower end thereof from the extended portion **32***a* of the lid member **32** as shown in FIGS. **15**–**17**.

When the lid member **32** is unlocked from the clamp hook **33***a*, a downward force acts on the lid member **32** as a consequence of the reaction of pushing the undersides of the ribs **34** of the dust collecting case **21** by the pushing section **60***a* of the lid opening lever **60**. The downward force will cause the lid member **32** to be opened to the position as shown in FIGS. **15**–**17**. As the lid member **32** is opened like this, the packing **37** is also disengaged from the open end of the dust collecting case **21**, allowing the lid member **32** to open by the weight of its own as shown in FIGS. **18**–**19**. The dust accumulated in the dust collecting case **21** is thus discharged from the case **21**.

In this way, as in the preceding embodiments, manual operations of the lid member **32** are not necessary to open the lid member if the weight of the compacted dust does not

facilitate the disengagement of the lid member due to the fact that the dust is compacted in the dust collecting case **21** and sticks to the inner wall of the case **21**. Thus, the user can avoid unsanitary job of opening the lid member **32** to remove the dust by hand.

In this embodiment, the two ribs **34** supporting the shaft **33***b* of the clamp lever **33** are utilized advantageously to create a reaction force to disengage the lid member from the dust collecting case, and no additional element is required on the dust collecting case **21** for liberating the lid member. Thus, the dust collection unit can be manufactured at no extra cost. The unit can be operated like a conventional one.

The protrusion **60***d* formed between the two ribs **34** facilitates correct positioning of the lid member **32** following the removal of dust.

What is claimed is:

1. A dust collection unit for use with an electric vacuum cleaner, comprising:

a dust collecting case for accumulating dust sucked into a suction unit;

a lid member mounted on said dust collecting case by at least one hinge;

an outlet for discharging the dust accumulated in said dust collecting case when said lid member is opened;

a lock mechanism for locking said lid member in a closed condition; and

a lid opening stick being movable in response to a manipulation of a manipulatory section, wherein

said lock mechanism is located at a position near a periphery of said lid member and opposite said hinge,

said lid opening stick is adapted to unlock said lock mechanism and push said lid member to forcibly release said lid member from said outlet when said lid opening stick is moved.

2. A dust collection unit for use with an electric vacuum cleaner, comprising:

a dust collecting case for accumulating dust sucked into a suction unit;

a lid member mounted on said dust collecting case by at least one hinge;

an outlet for discharging the dust accumulated in said dust collecting case when said lid member is opened;

a packing provided between said lid member and periphery of the opening of said outlet of said dust collecting case;

a lock mechanism for locking said lid member in a closed condition; and

a lid opening stick being movable in response to a manipulation of a manipulatory section, wherein

said lock mechanism is located at a position near the periphery of said lid member and opposite said hinge,

said lid opening stick is adapted to unlock said lock mechanism and push said lid member to forcibly release said lid member from said outlet when said lid opening stick is moved.

3. A dust collection unit for use with an electric vacuum cleaner, comprising:

a dust collecting case for accumulating dust sucked into a suction unit;

a lid member mounted on the bottom of said dust collecting case by at least one hinge; and

a lock mechanism for locking said lid member in a closed condition, wherein

a lid opening stick being moveable in response to a manipulation of a manipulatory section, wherein

said lock mechanism is located at a position near a periphery of said lid member and opposite said hinge,

said lid opening stick is adapted to unlock said lock mechanism and push down said lid member to forcibly release said lid member from the bottom of said dust collecting case when said lid opening stick is pushed down.

4. The dust collection unit for use with an electric vacuum cleaner according to any one of claims **1** through **3**, wherein said dust collecting case is made of a transparent resin and is provided inside thereof with a cylindrical filter.

5. An upright electric vacuum cleaner, comprising:

a suction unit provided under the cleaner body of said upright electric vacuum cleaner;

a manipulation handle provided at an upper section of said cleaner body for handling said cleaner body; and

a dust collection unit detachably mounted on said cleaner body, wherein said dust collection unit includes:

a dust collecting case for accumulating dust sucked into a suction unit;

a lid member rotatably mounted on said dust collecting case by at least one hinge;

an outlet for discharging the dust accumulated in said dust collecting case when said lid member is opened;

a lock mechanism for locking said lid member in a closed condition; and

a lid opening stick being movable in response to a manipulation of a manipulatory section, wherein

said lock mechanism is located at a position near a periphery of said lid member and opposite said hinge, and

said lid opening stick is adapted to unlock said lock mechanism and push said lid member to forcibly release said lid member from said outlet when said lid opening stick is moved.

6. An upright electric vacuum cleaner, comprising:

a suction unit provided under a cleaner body of said upright electric vacuum cleaner;

a manipulation handle provided at an upper section of said cleaner body for handling said cleaner body; and

a dust collection unit detachably mounted on said cleaner body, wherein said dust collection unit includes:

a dust collecting case for accumulating dust sucked into a suction unit;

a lid member mounted on said dust collecting case by at least one binge;

an outlet for discharging the dust accumulated in said dust collecting case when said lid member is opened;

a packing provided between said lid member and periphery of the opening of said outlet of said dust collecting case;

a lock mechanism for locking said lid member in a closed condition; and

a lid opening stick being movable in response to a manipulation of a manipulatory section, wherein

said lock mechanism is located at a position near a periphery of said lid member and opposite and hinge, and

said lid opening stick is adapted to unlock said lock mechanism and push said lid member to forcibly release said lid member from said outlet when said lid opening stick is moved.

7. An upright electric vacuum cleaner, comprising:

a suction unit provided under a cleaner body of said upright electric vacuum cleaner;

a manipulation handle provided at an upper section of said cleaner body for handling said cleaner body; and

a dust collection unit detachably mounted on said cleaner body, wherein said dust collection unit includes:

a dust collecting case for accumulating dust sucked into a suction unit;

a lid member mounted on the bottom of said dust collecting case by at least one hinge;

a lock mechanism for locking said lid member in a closed condition; and

a lid opening stick being movable in response to a manipulation of a manipulatory section, wherein

said lock mechanism is located at a position near a periphery of said lid member and opposite said hinge, and

said lid opening stick is adapted to unlock said lock mechanism and push down said lid member to forcibly release said lid member from the bottom of said dust collecting case when said lid opening stick is pushed down.

8. The upright electric vacuum cleaner according to any one of claims **5** through **7**, wherein said dust collecting case is made of a transparent resin and is provided inside thereof with a cylindrical filter.

9. The upright electric vacuum cleaner according to any one of claims **5** through **7**, wherein dust sucked together with air into said suction unit flows into said dust collecting case and whirls in said dust collecting case.

10. The upright electric vacuum cleaner according to any one of claims **5** through **7**, wherein the air filtered by said dust collection unit and removed of dust thereby, is discharged from said dust collecting case, led to an electric fan, and then discharged to the atmosphere via an exhaust filter and through the exhaust opening of said cleaner body.

* * * * *