US 20180333523A1

(19) United States

(12) Patent Application Publication

Chang et al.

(10) Pub. No.: US 2018/0333523 A1

(43) Pub. Date: Nov. 22, 2018

(54) **BREAST PUMP ASSEMBLY AND METHODS**

(71) Applicant: **EXPLORAMED NC7, INC.**, MOUNTAIN VIEW, CA (US)

(72) Inventors: **John Chang**, Los Altos, CA (US); **Joshua Makower**, Los Altos Hills, CA (US); **Brian Mason**, Menlo Park, CA (US); **Fred Co**, Santa Clara, CA (US); **Mathew Calmer**, San Francisco, CA (US); **Arash Sabet**, Walnut Creek, CA (US)

(73) Assignee: **EXPLORAMED NC7, INC.**, Tokyo (JP)

(21) Appl. No.: **16/050,201**

(22) Filed: **Jul. 31, 2018**

Related U.S. Application Data

(63) Continuation of application No. PCT/US17/17112, filed on Feb. 9, 2017.

(60) Provisional application No. 62/421,263, filed on Nov. 12, 2016, provisional application No. 62/442,008, filed on Jan. 4, 2017, provisional application No. 62/450,528, filed on Jan. 25, 2017, provisional application No. 62/293,480, filed on Feb. 10, 2016.

Publication Classification

(51) **Int. Cl.**

A61M 1/06 (2006.01)

A61M 1/00 (2006.01)

(52) **U.S. Cl.**

CPC ***A61M 1/064*** (2014.02); *A61M 2205/3331* (2013.01); *A61M 1/0066* (2013.01); ***A61M 1/0001*** (2013.01)

(57) **ABSTRACT**

Systems and methods for pumping milk from a breast, wherein the milk is expressed from the breast under suction and milk is expulsed from the pumping mechanism to a collection container under positive pressure.

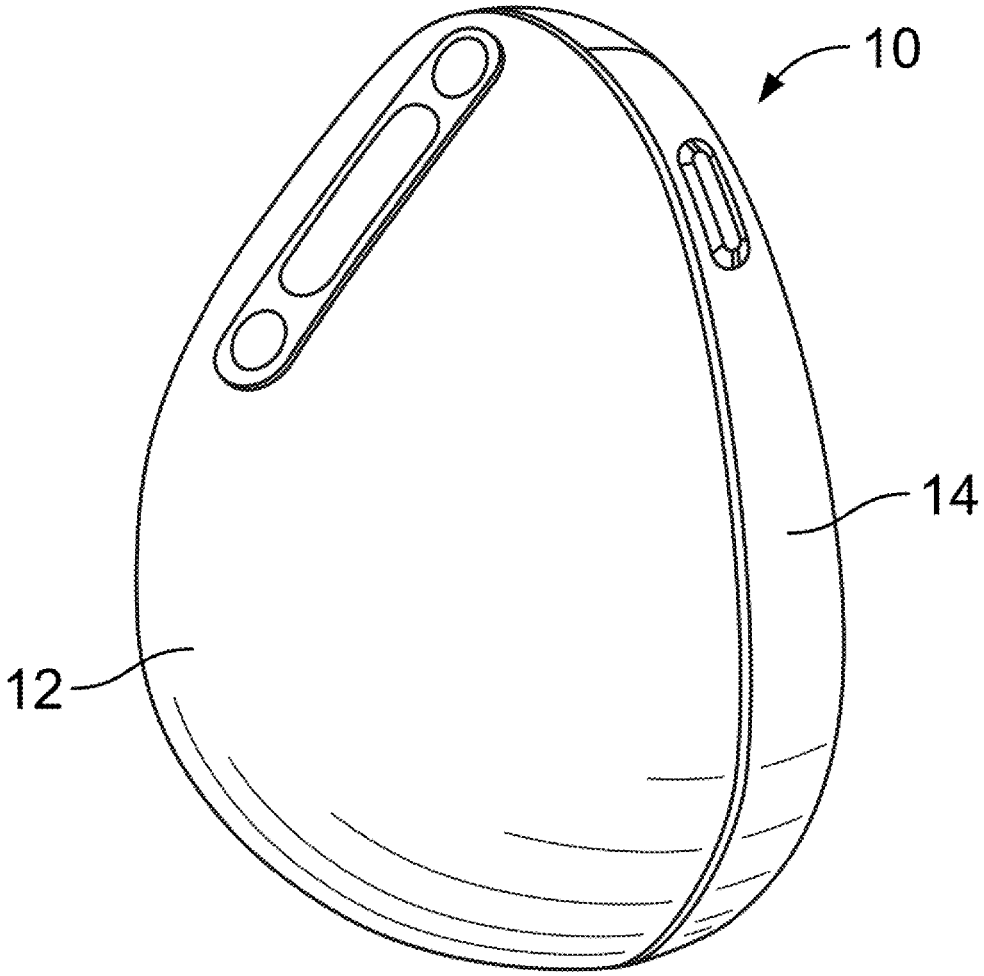

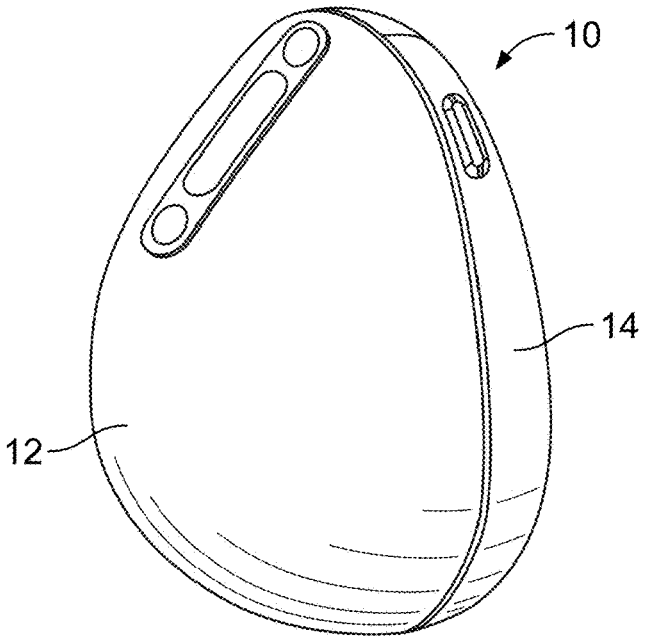

FIG. 1A

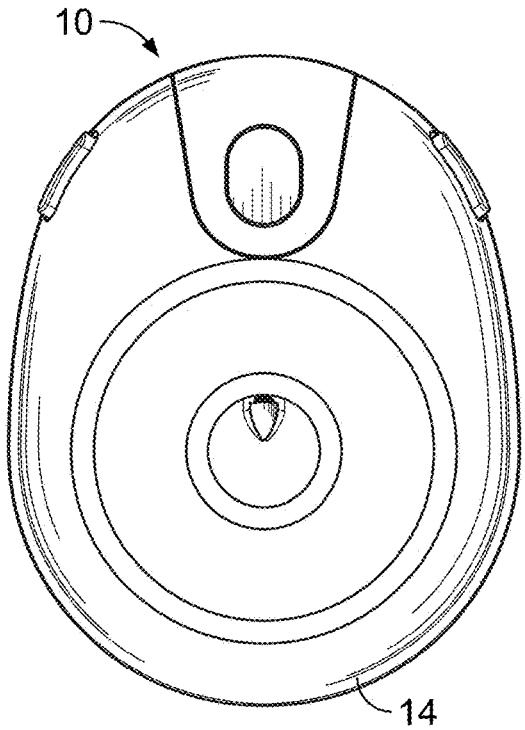

FIG. 1B

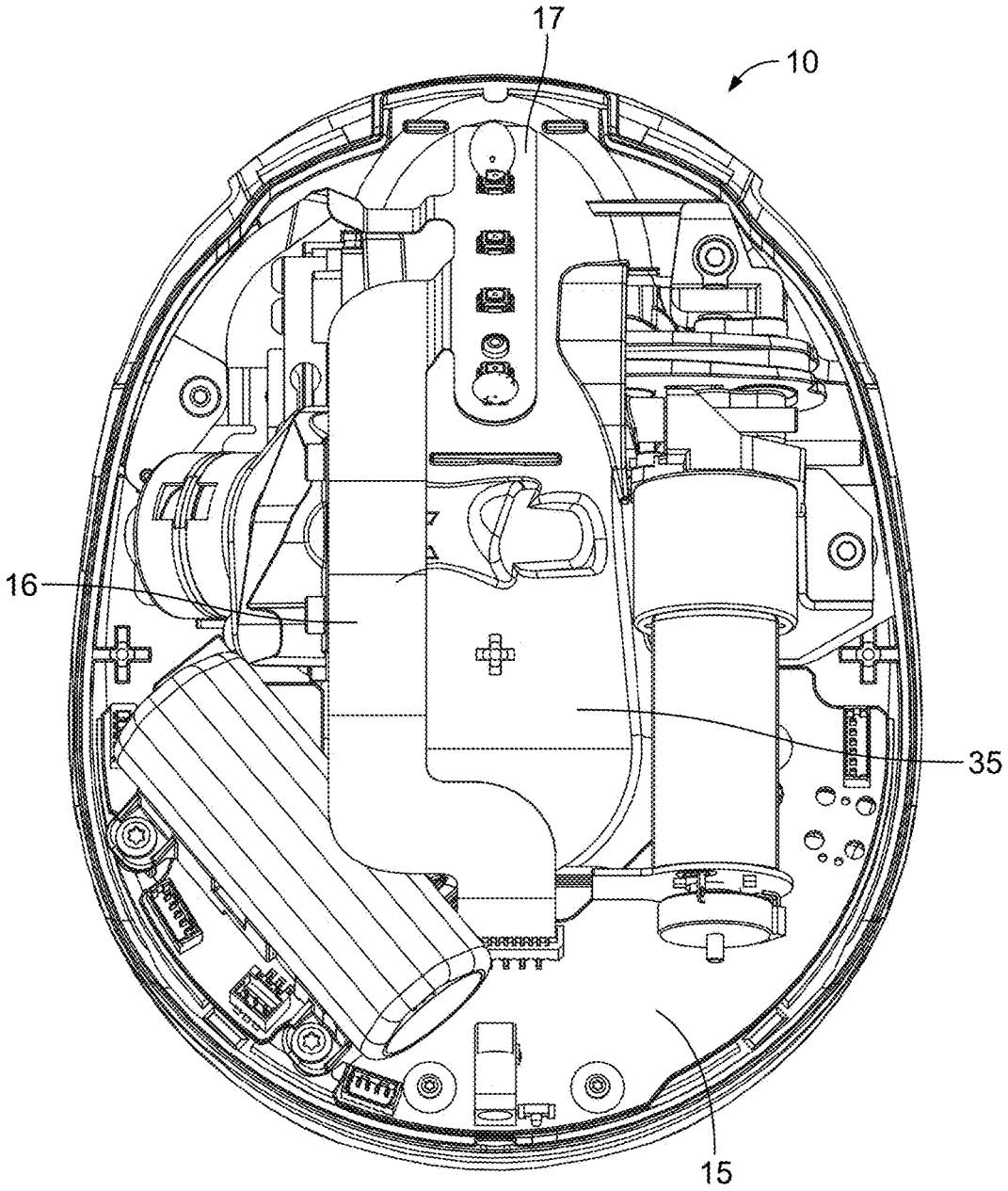

FIG. 2

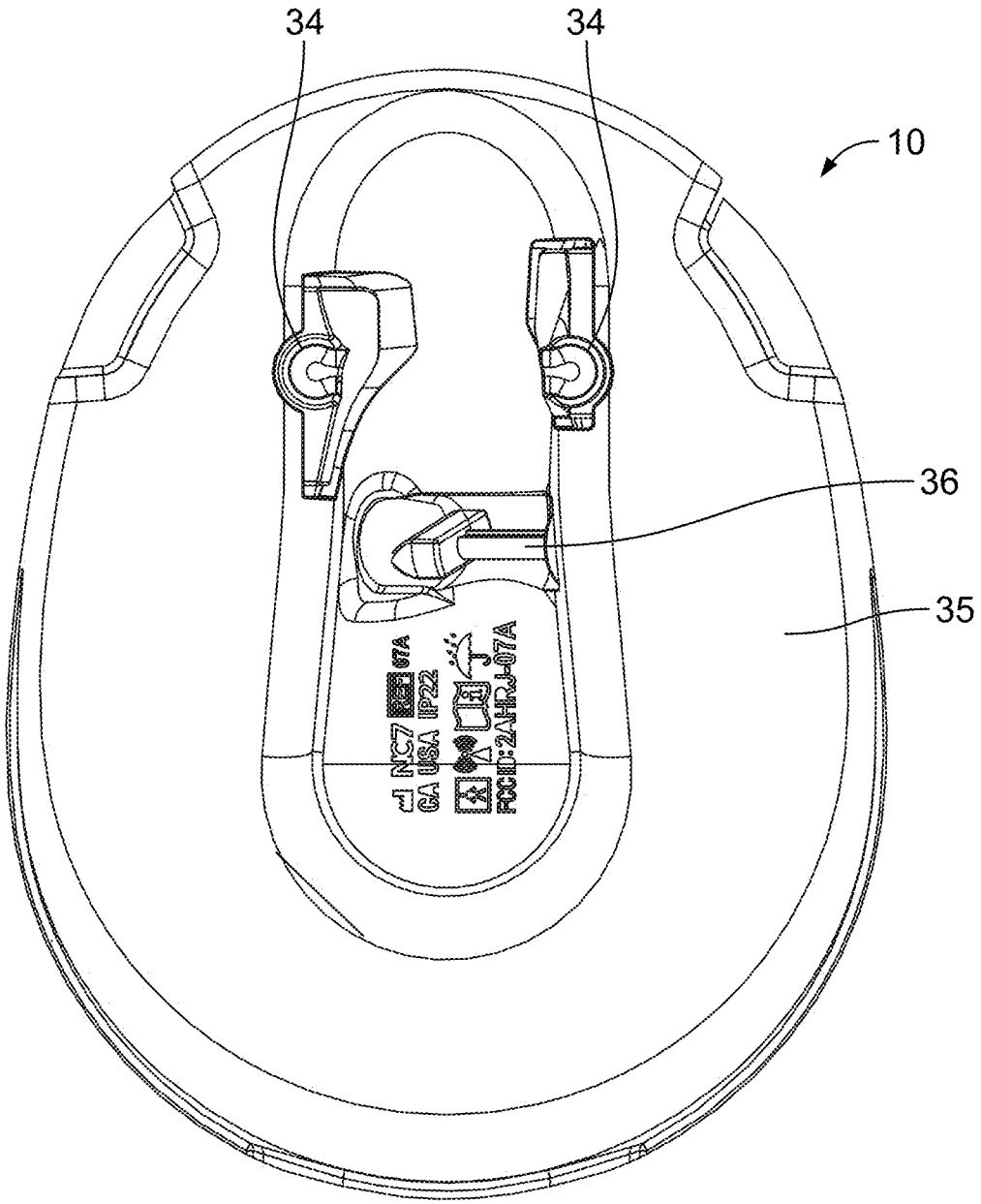

FIG. 3

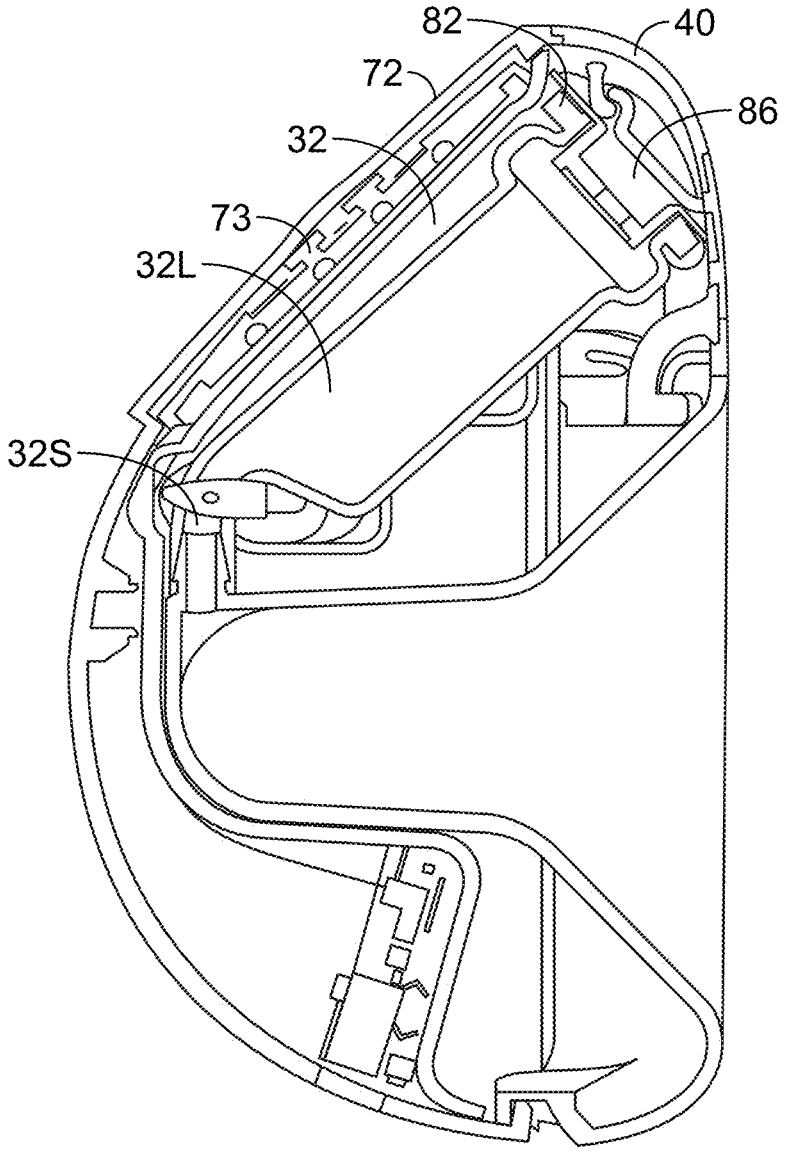

FIG. 4

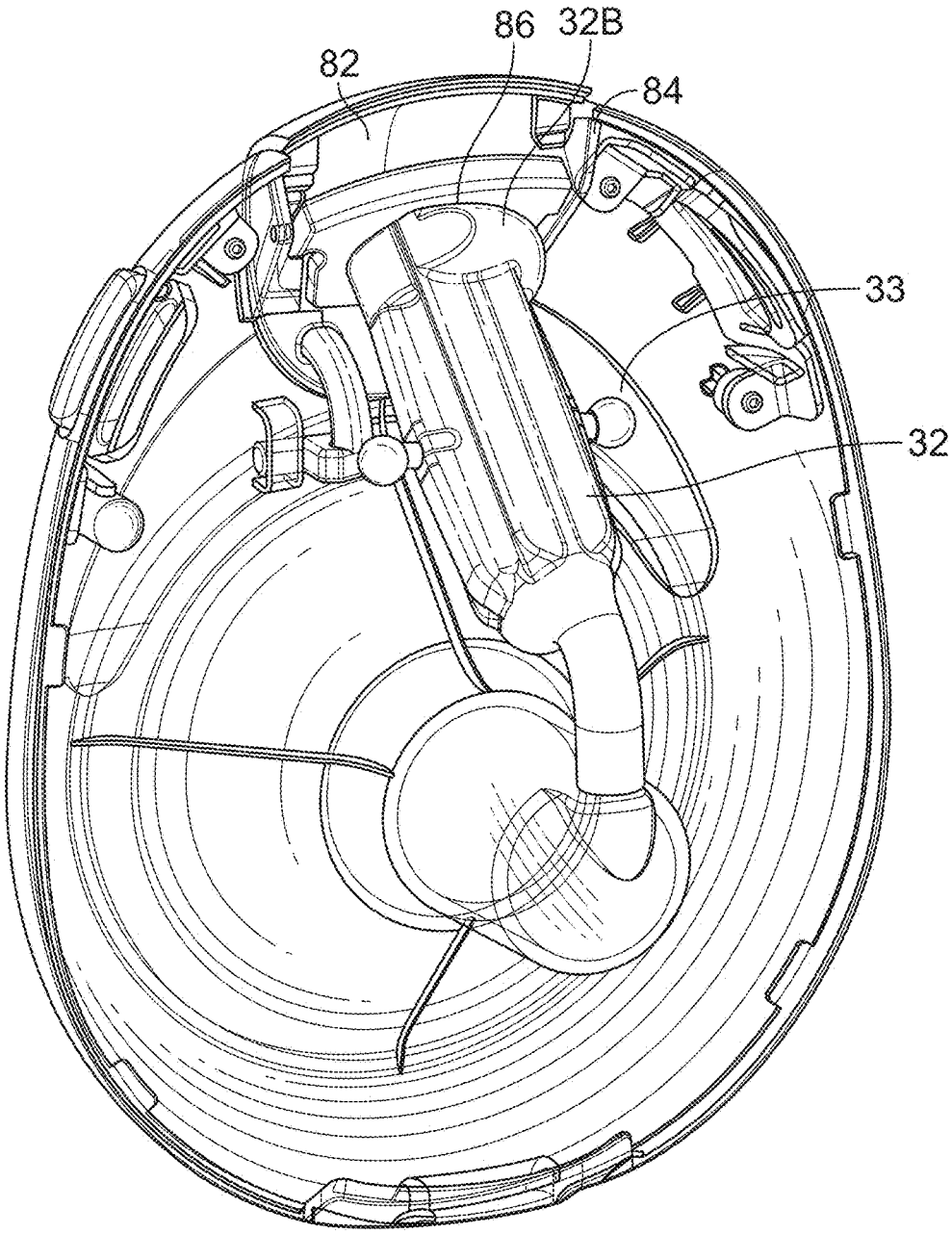

FIG. 5

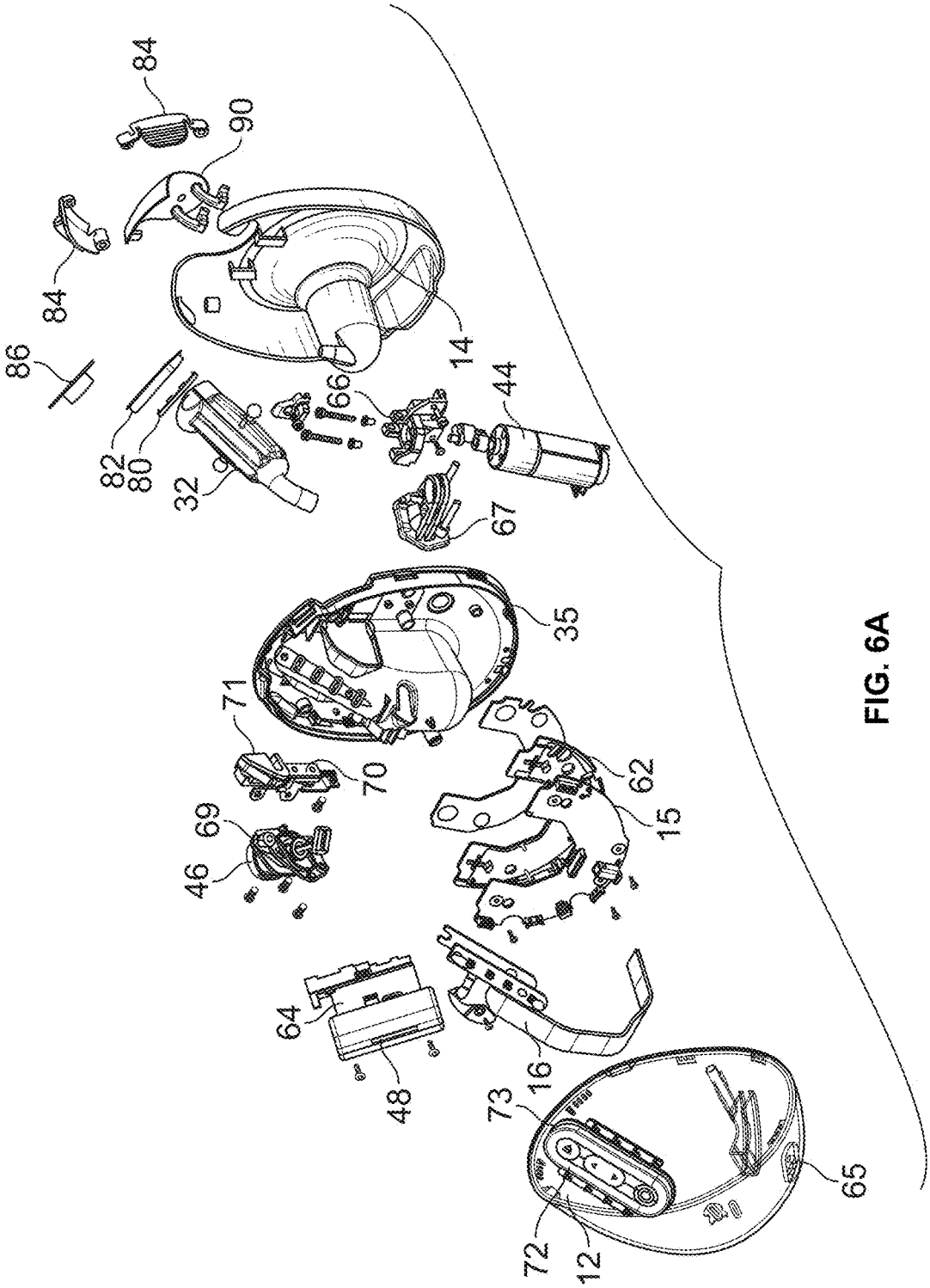
84
90
84
86
14
66
44
82
80
32
67
35
71
70
62
69
15
46
64
16
48
73
65
72
12

FIG. 6A

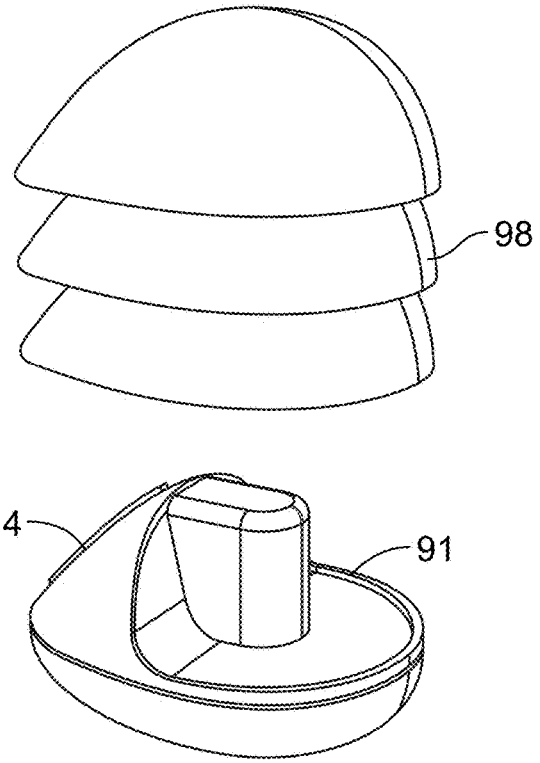

FIG. 6B

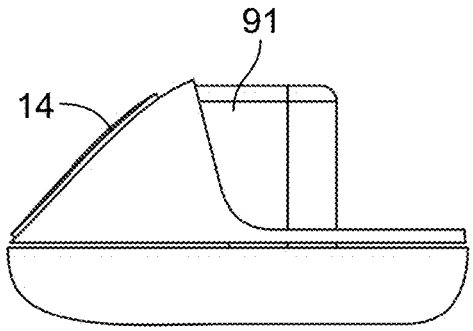

FIG. 6C

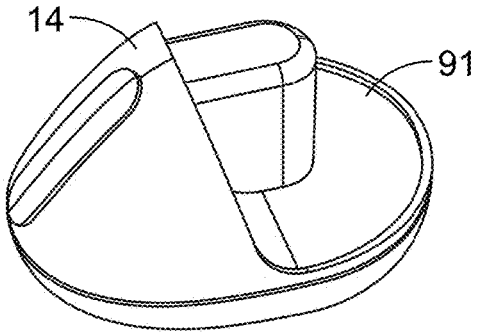

FIG. 6D

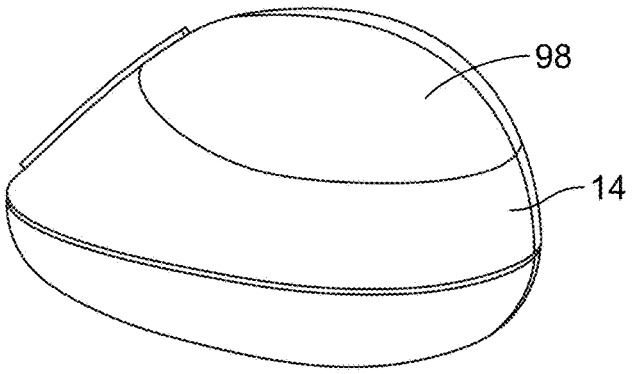

FIG. 6E

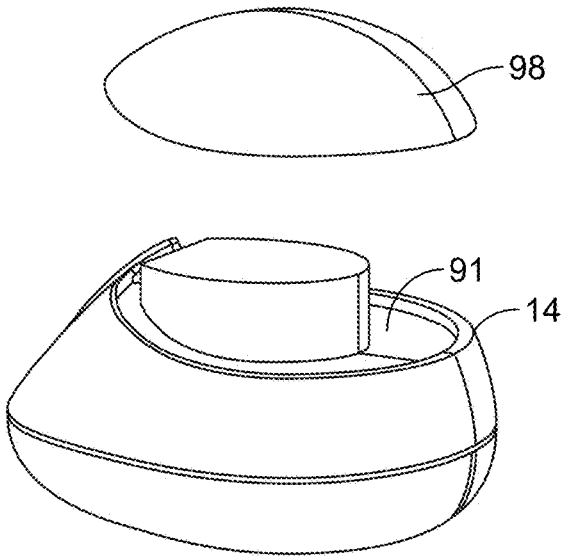

FIG. 6F

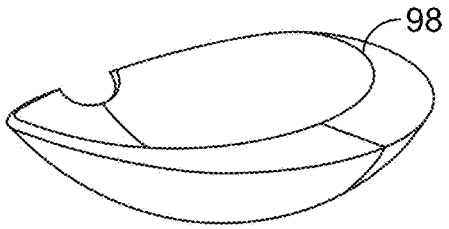

FIG. 6G

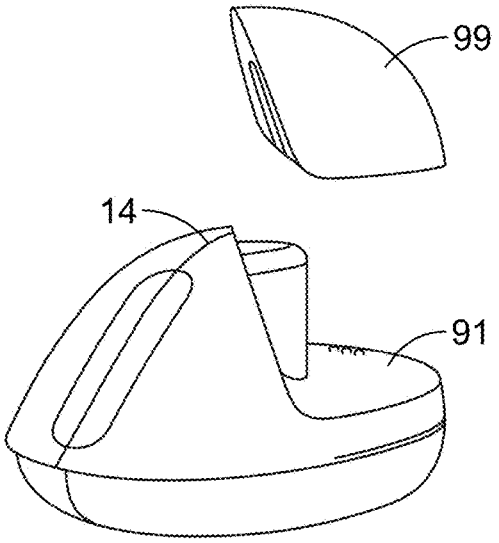

FIG. 6H

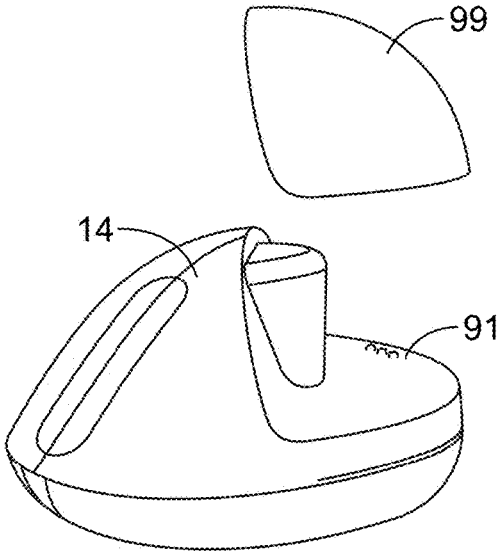

FIG. 6I

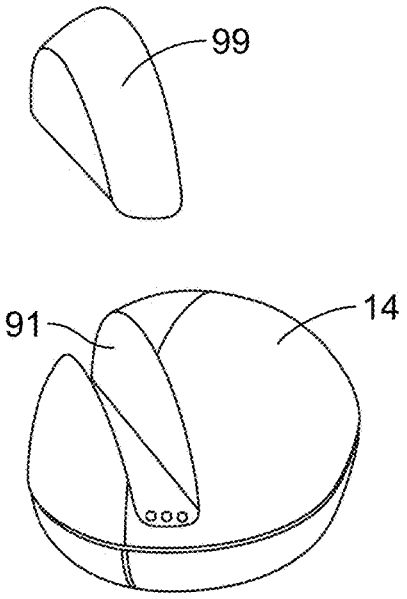

FIG. 6J

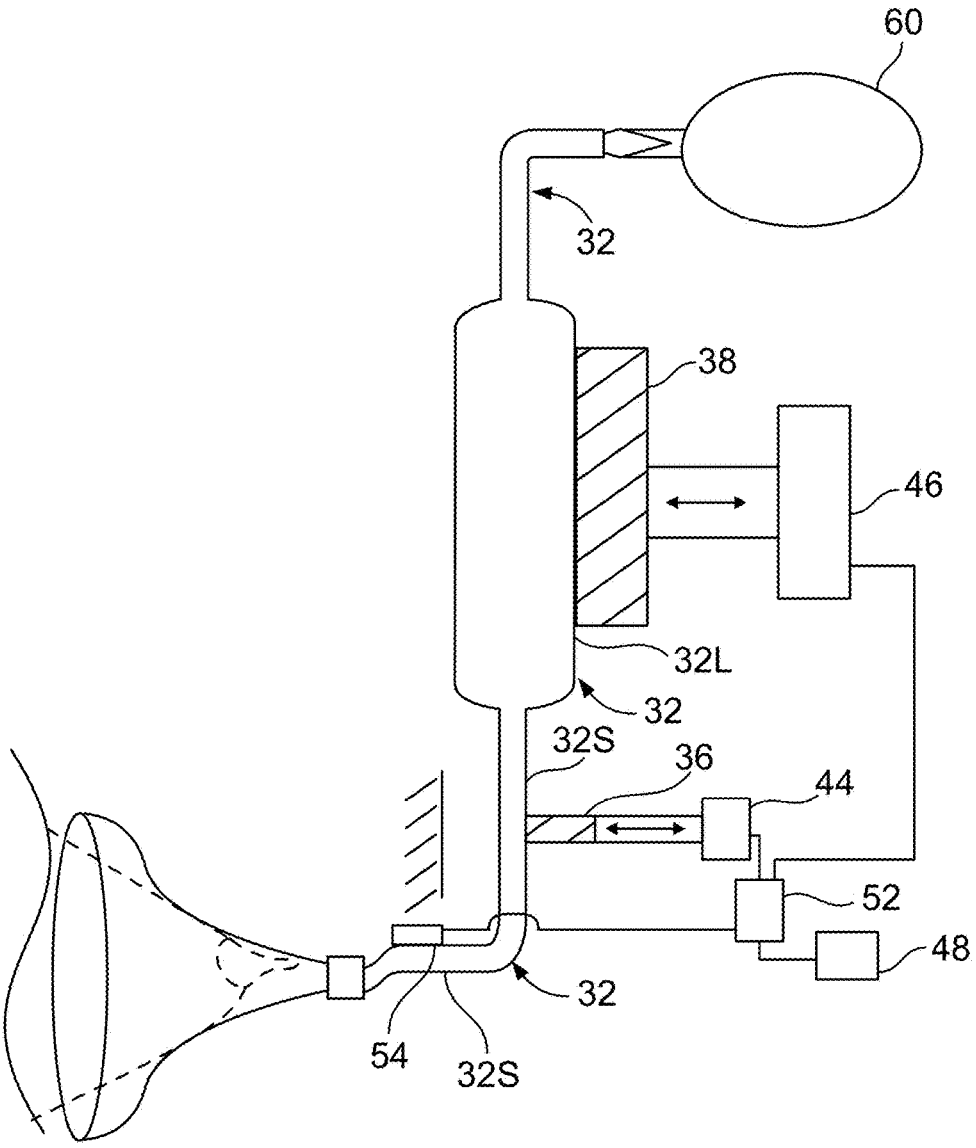

FIG. 7A

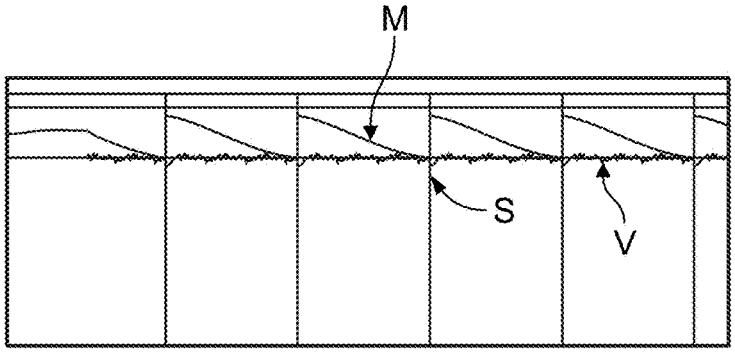

FIG. 7B

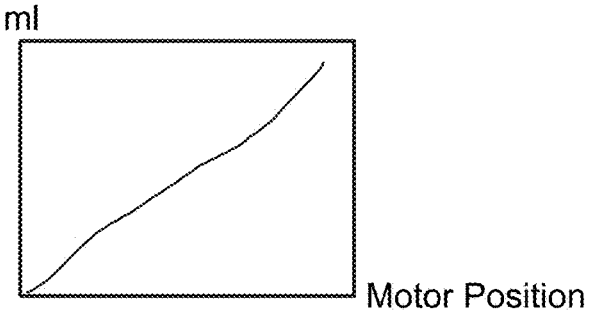

FIG. 7C

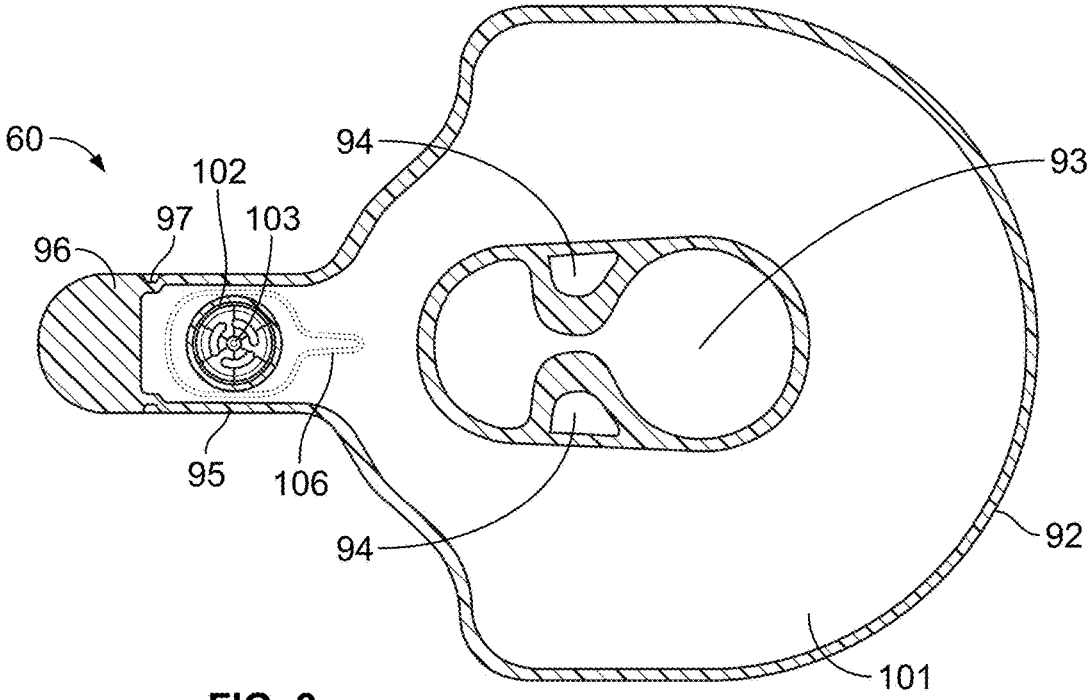

FIG. 8

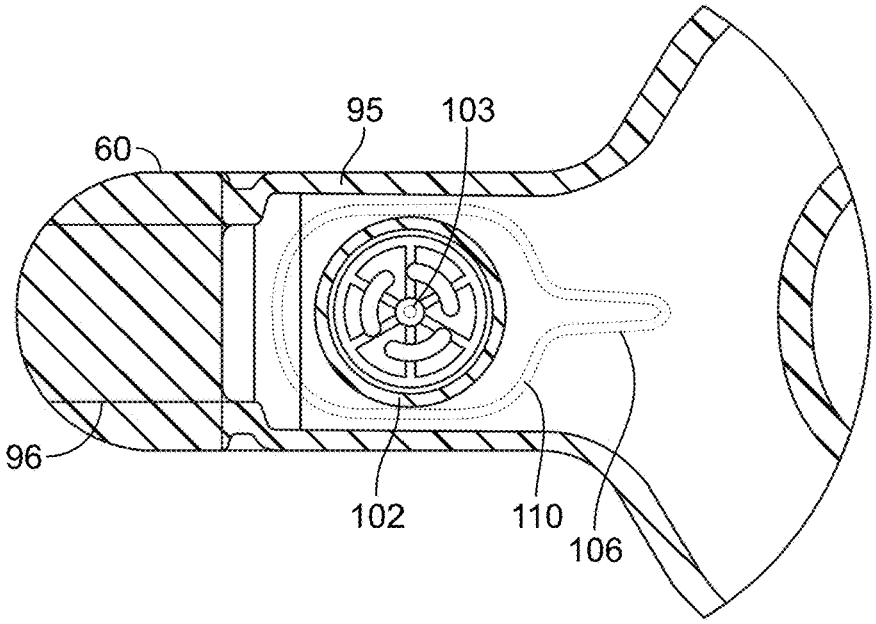

FIG. 9

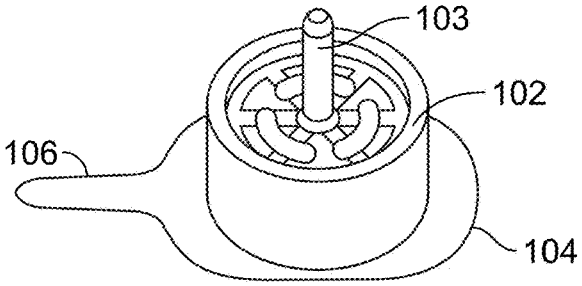

FIG. 10

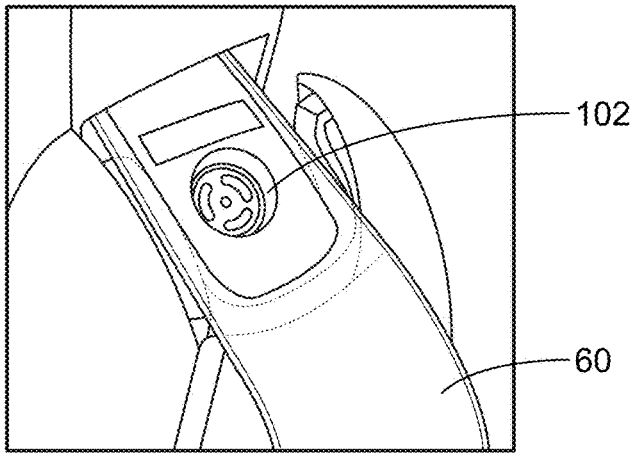

FIG. 11A

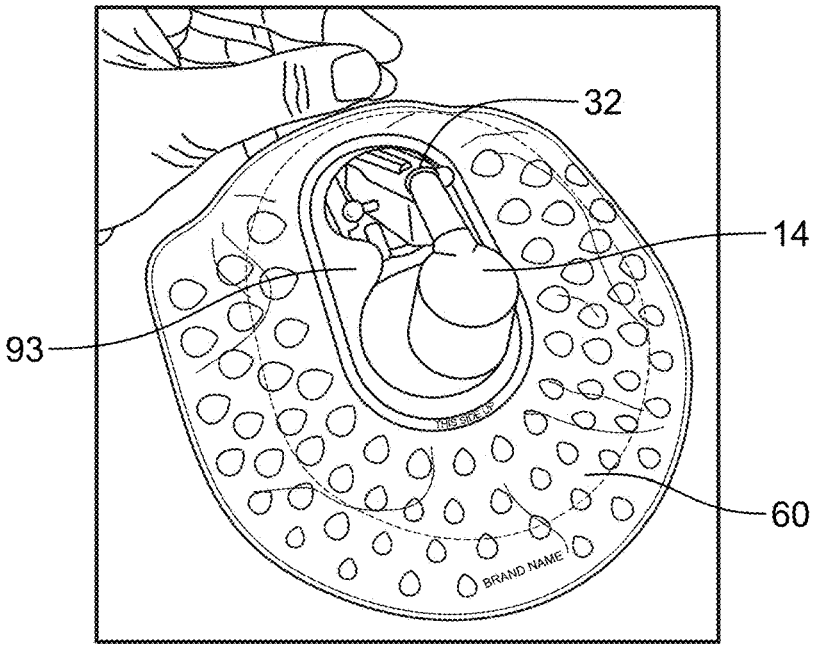

FIG. 11B

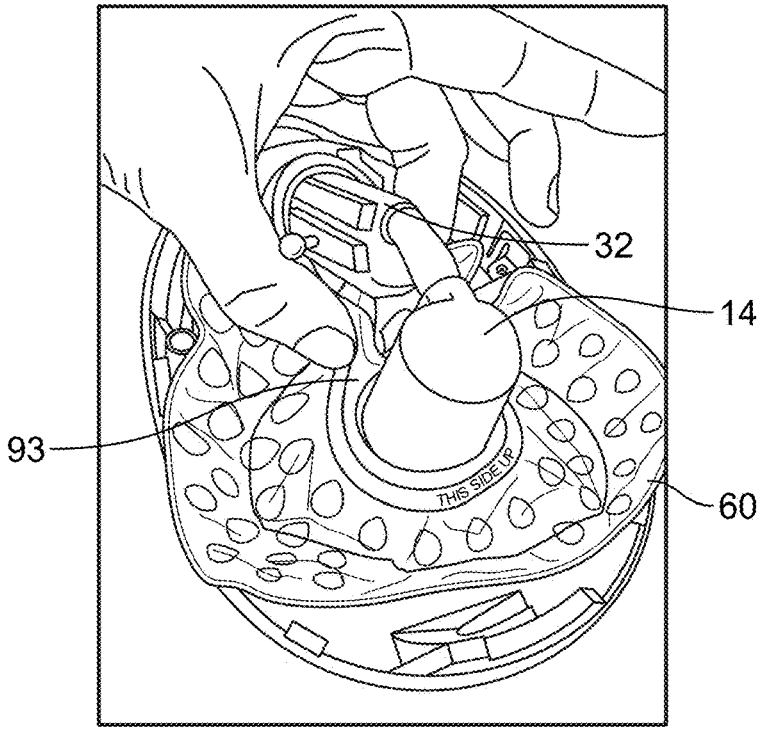

FIG. 11C

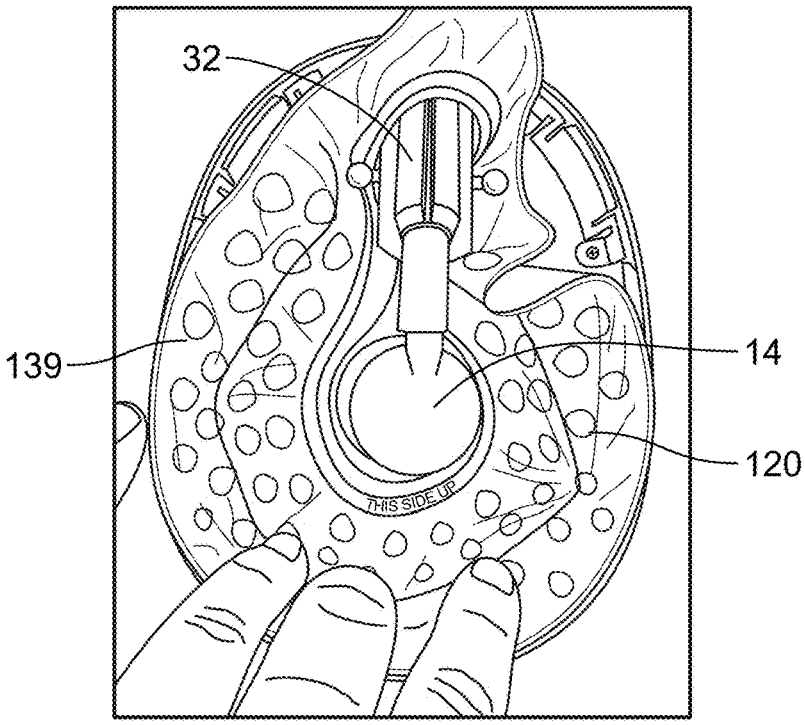

FIG. 11D

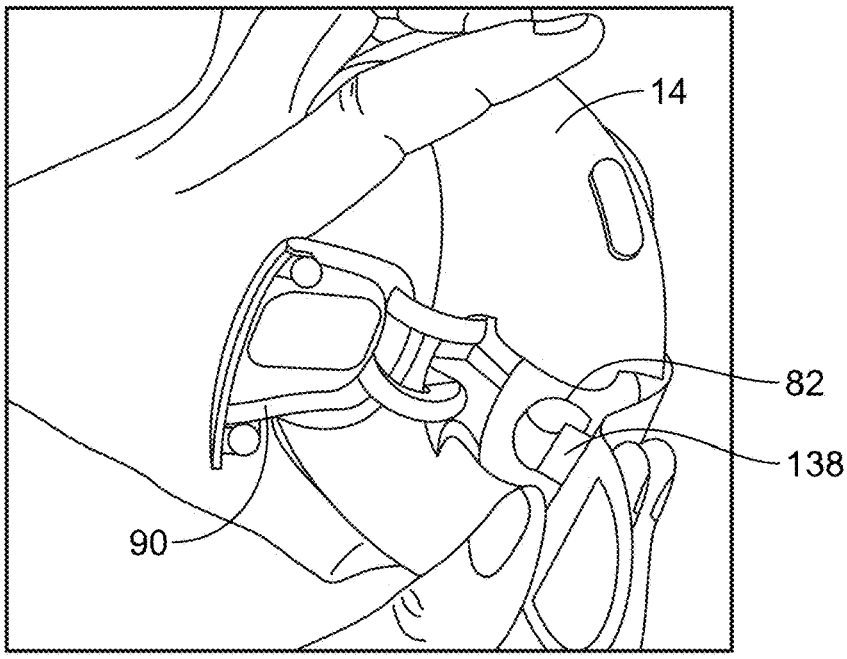

FIG. 11E

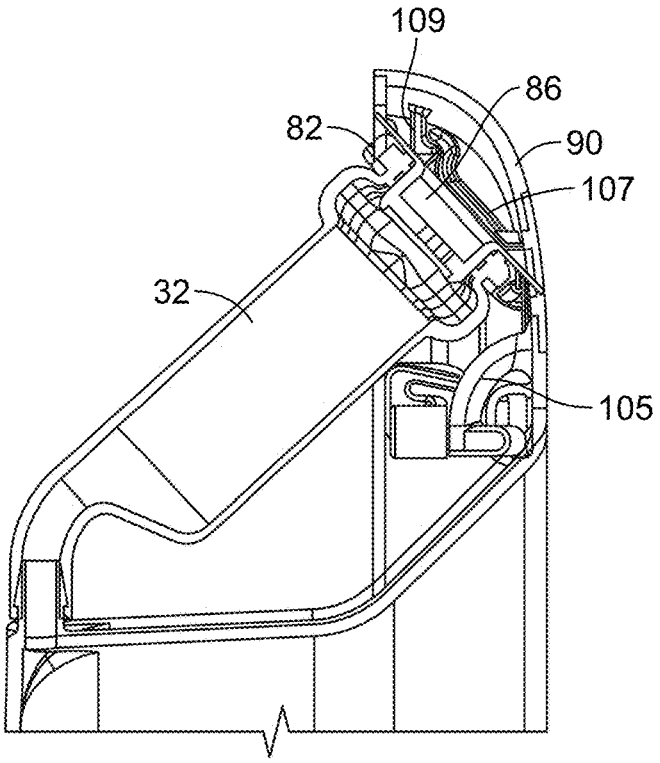

FIG. 12

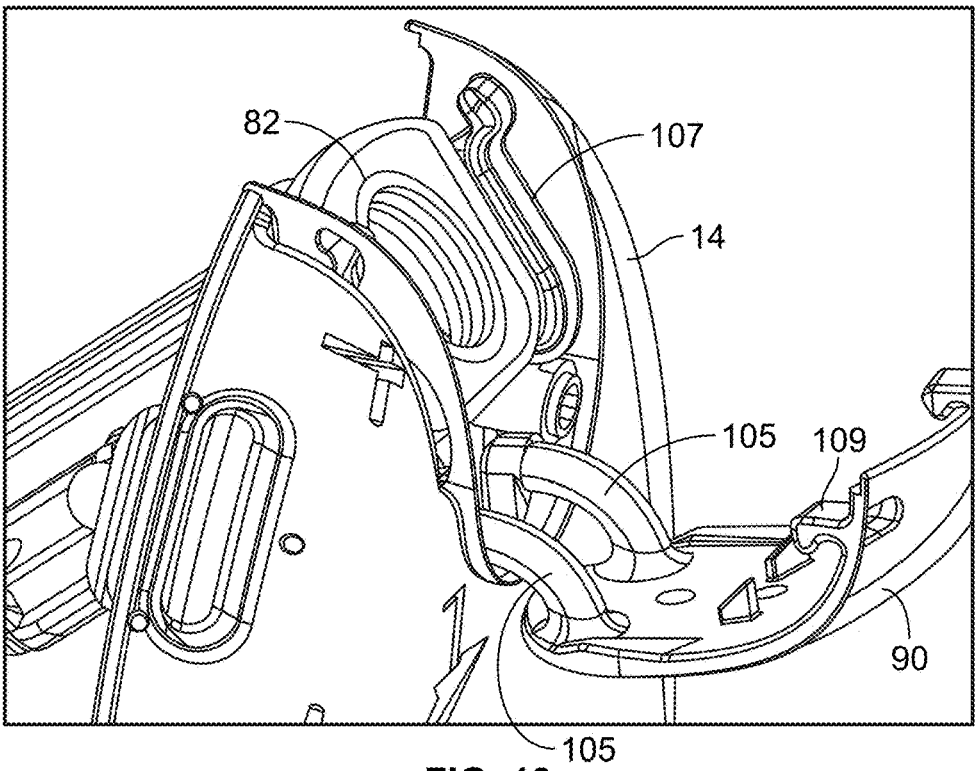

FIG. 13

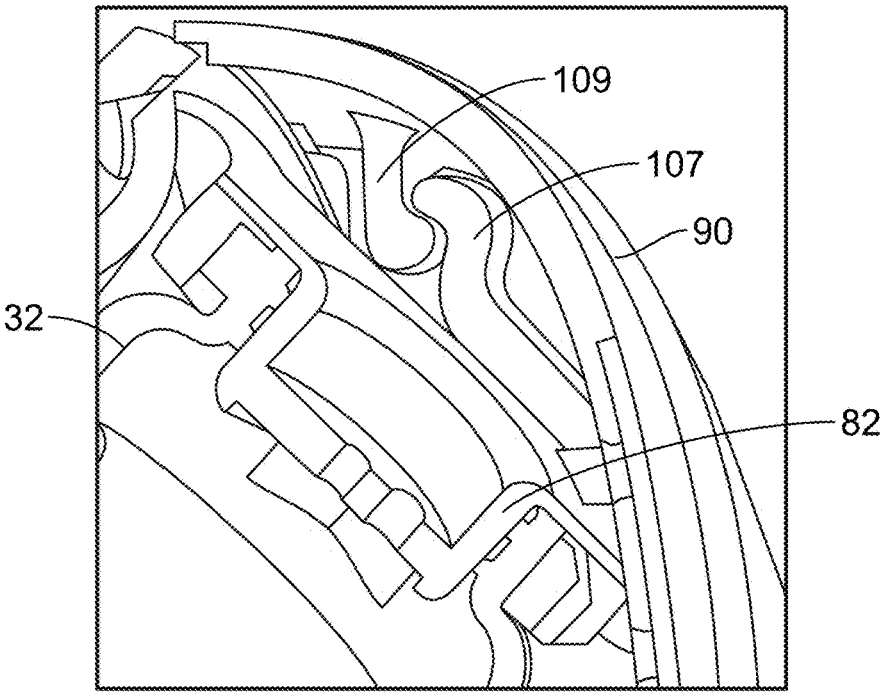

FIG. 14

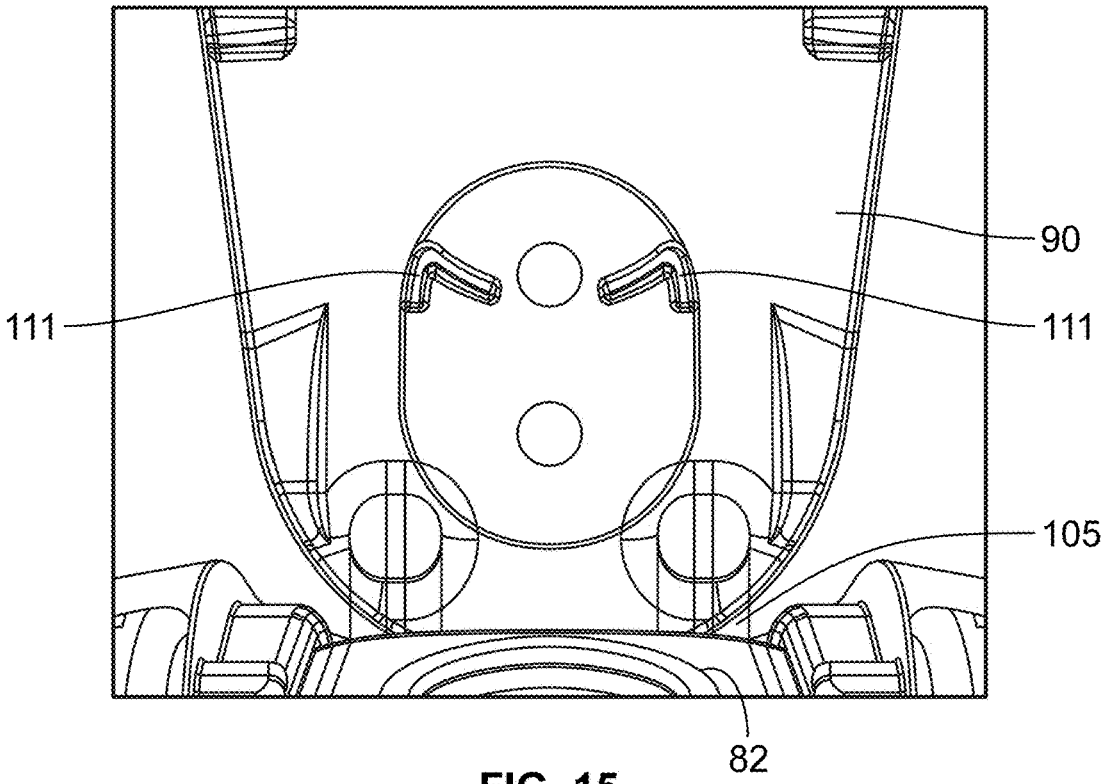

FIG. 15

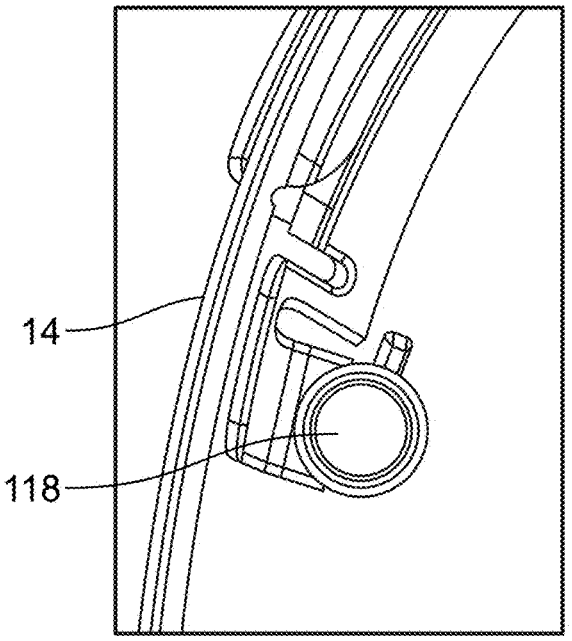

FIG. 16

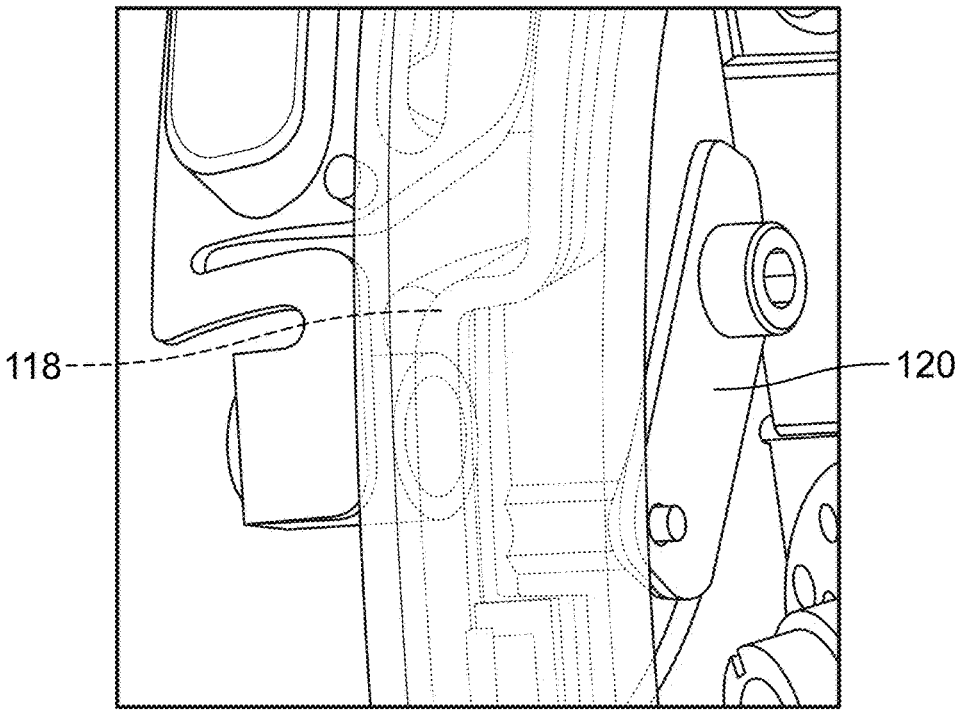

FIG. 17

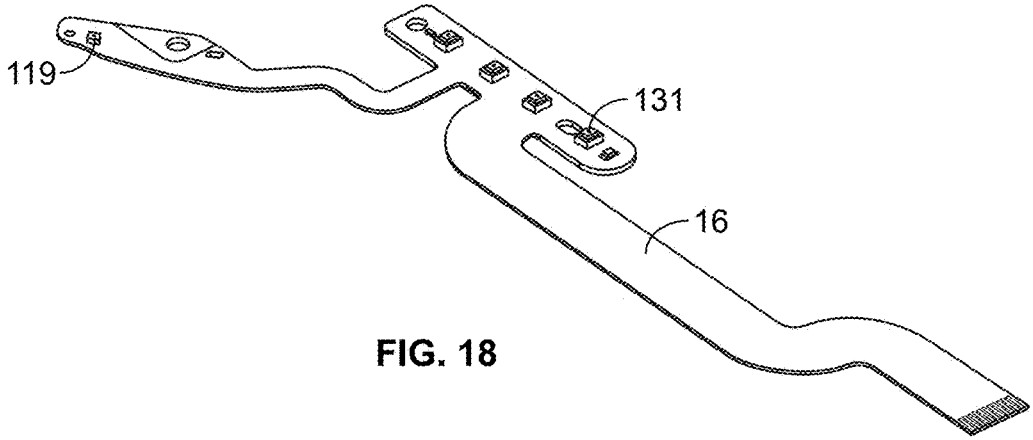

FIG. 18

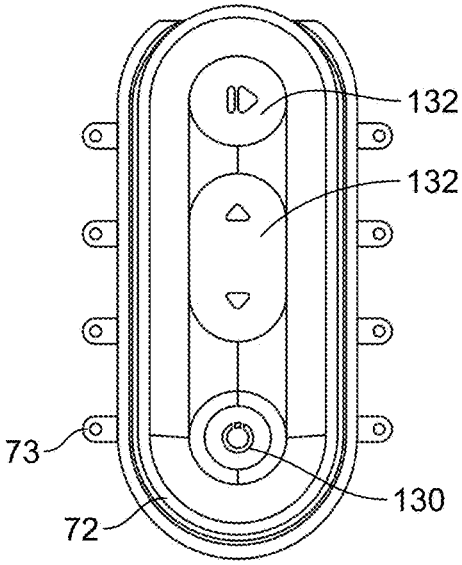

FIG. 19

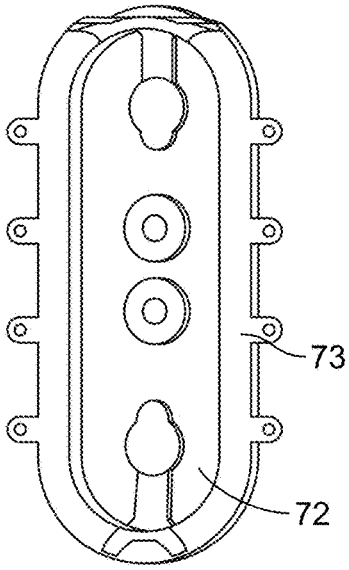

FIG. 20

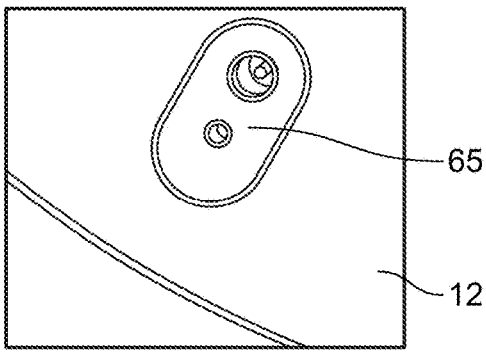

FIG. 21

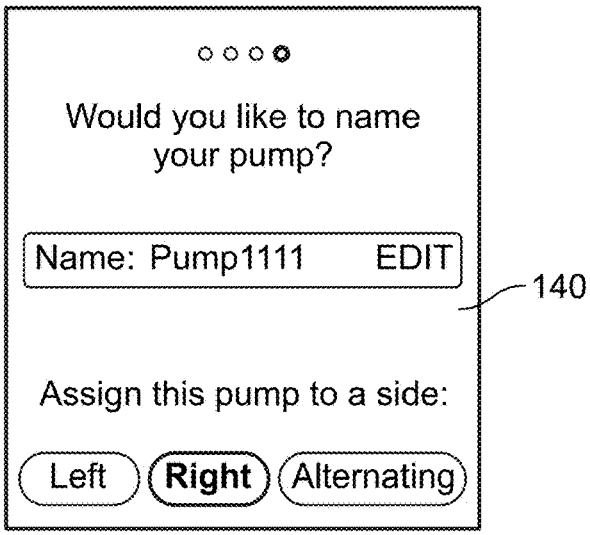
Would you like to name your pump?
Name: Pump1111 EDIT
140
Assign this pump to a side:
Left
Right
Alternating

FIG. 22

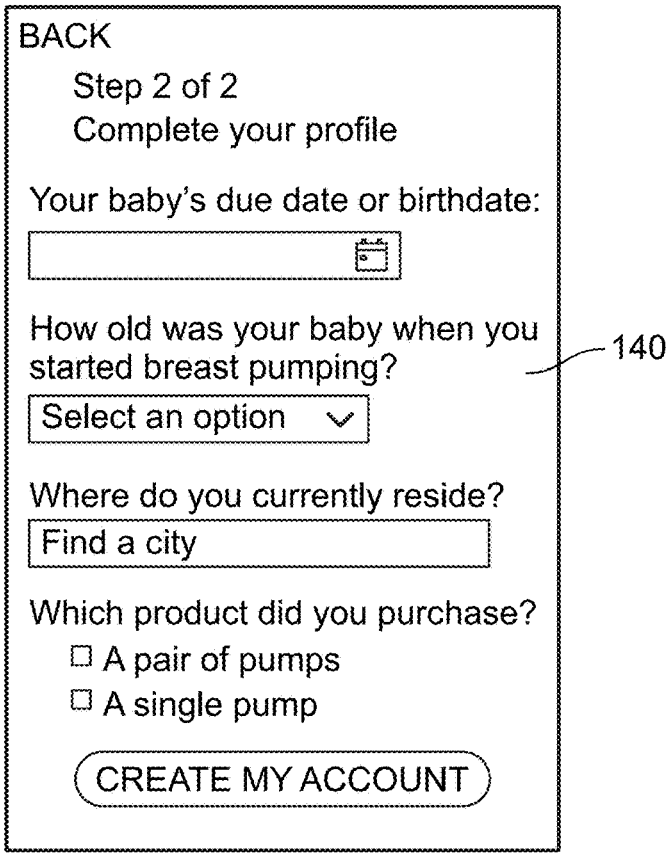
BACK
Step 2 of 2
Complete your profile
Your baby's due date or birthdate:
How old was your baby when you started breast pumping?
140
Select an option
Where do you currently reside?
Find a city
Which product did you purchase?
A pair of pumps
A single pump
CREATE MY ACCOUNT

FIG. 23

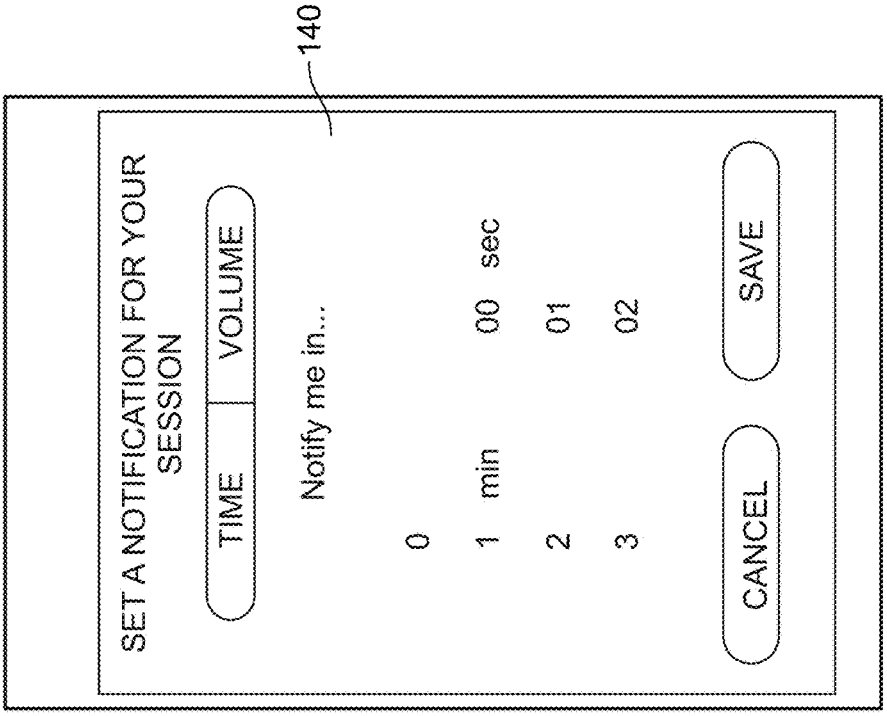
140
SET A NOTIFICATION FOR YOUR SESSION
TIME
VOLUME
Notify me in...
0
1 min
00 sec
2
01
3
02
CANCEL
SAVE

FIG. 25

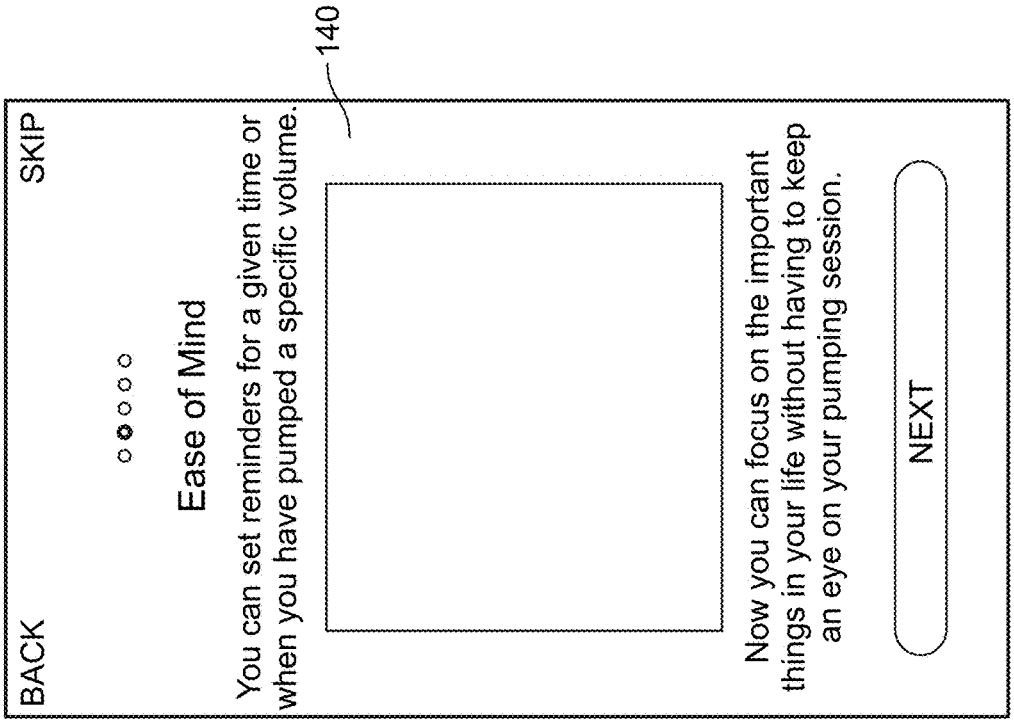
140
BACK
SKIP
Ease of Mind
You can set reminders for a given time or when you have pumped a specific volume.
Now you can focus on the important things in your life without having to keep an eye on your pumping session.
NEXT

FIG. 24

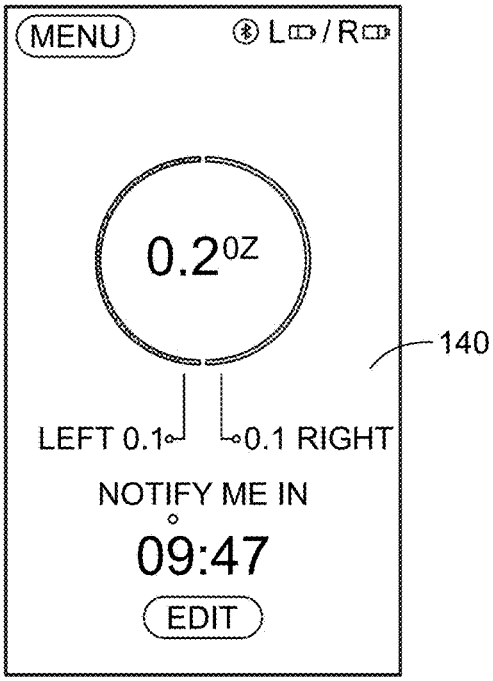

FIG. 26

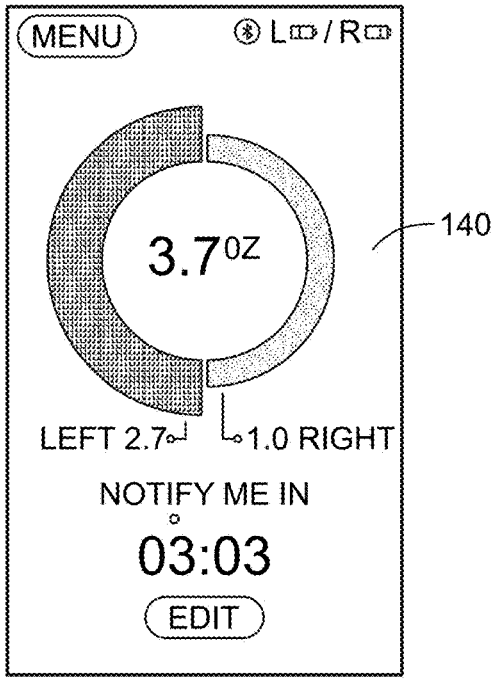

FIG. 27

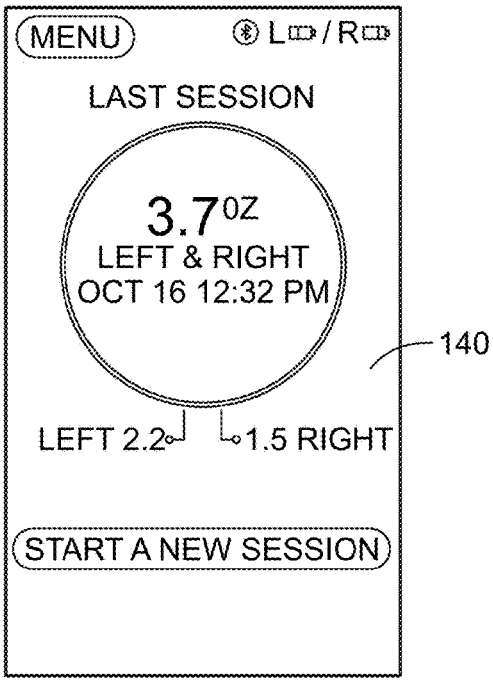

FIG. 28

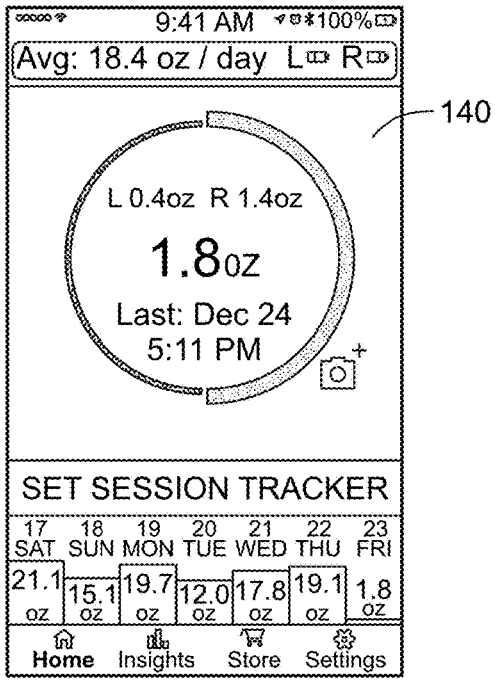

FIG. 29

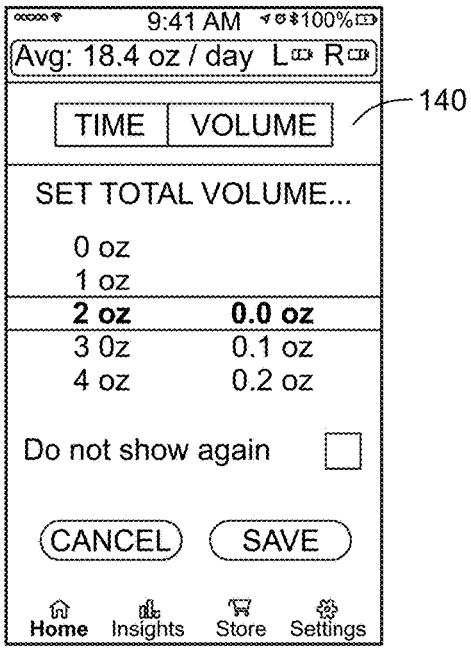

FIG. 30

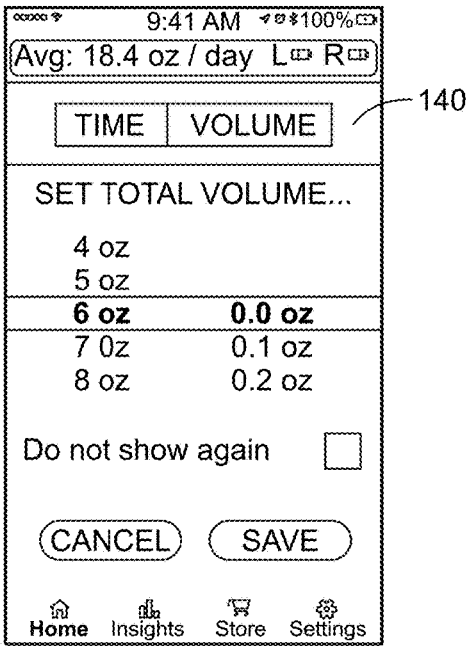

FIG. 31

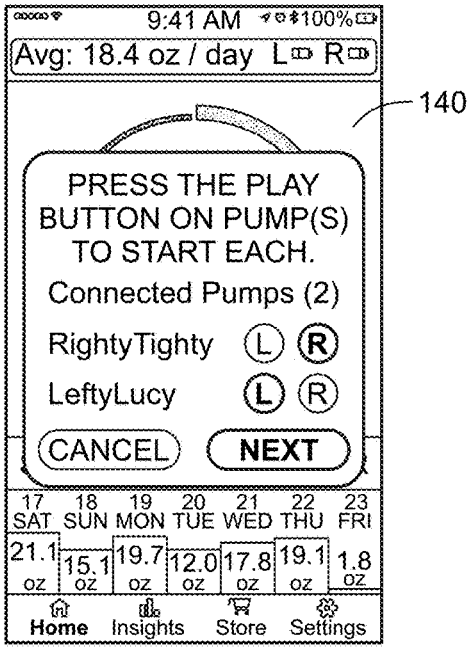

FIG. 32

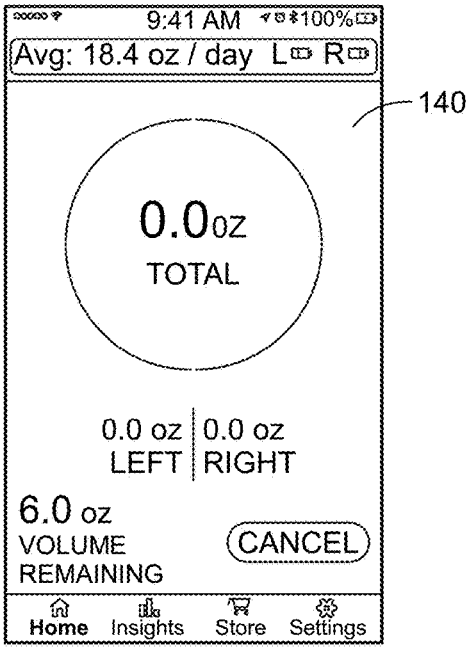

FIG. 33

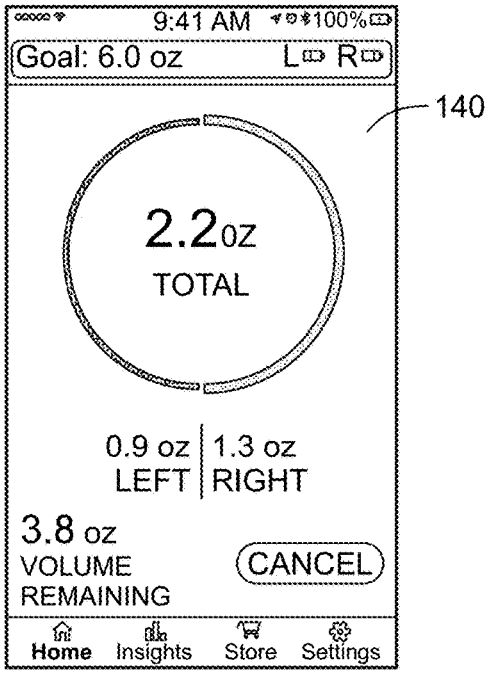

FIG. 34

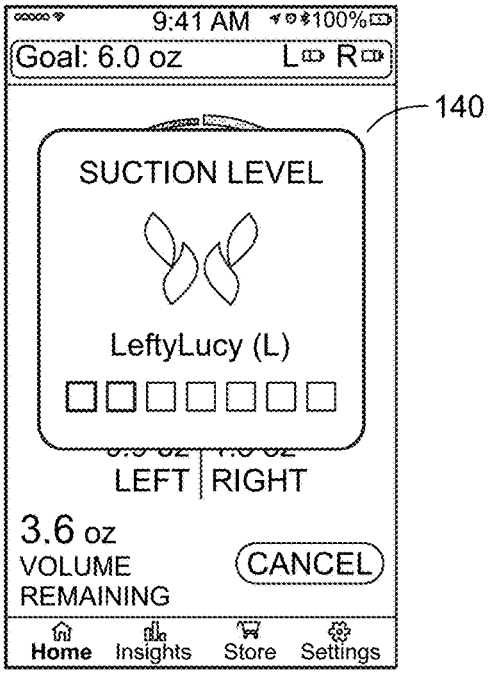

FIG. 35

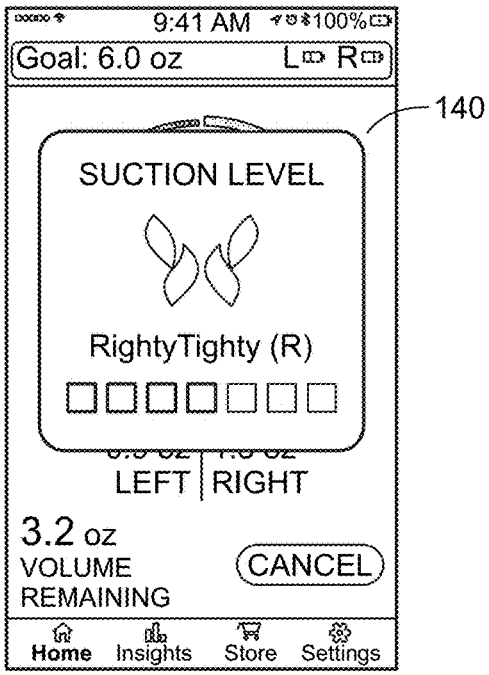

FIG. 36

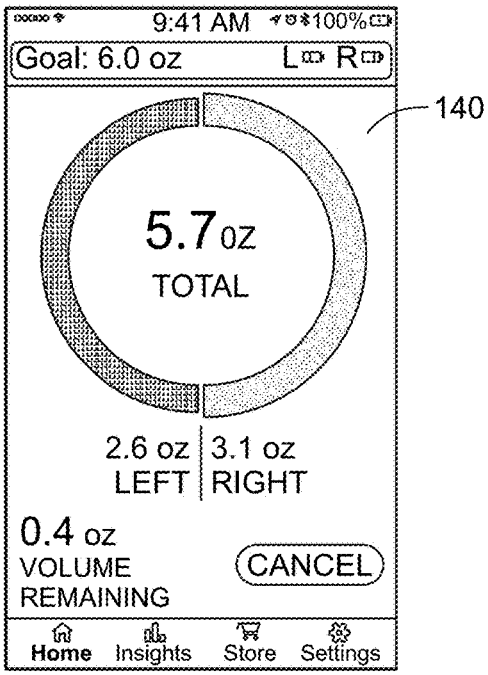

FIG. 37

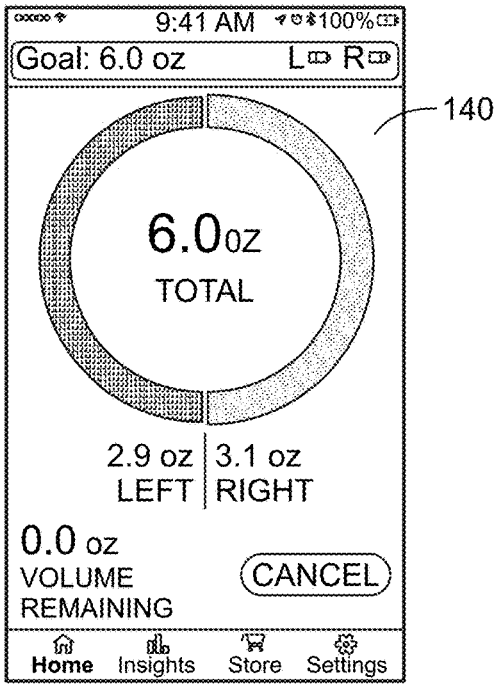

FIG. 38

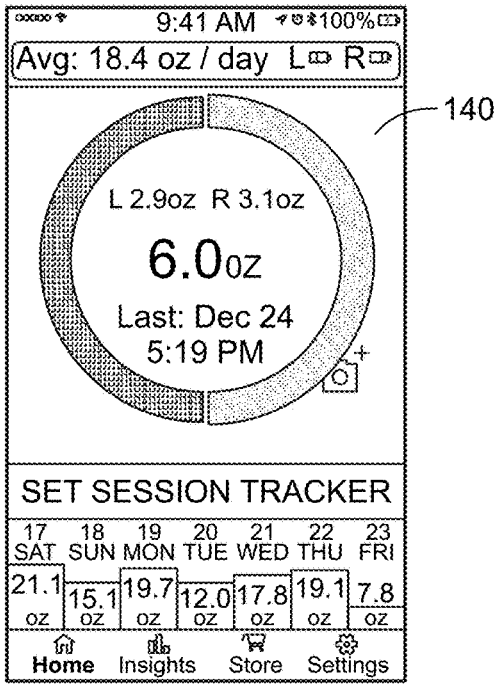

FIG. 39

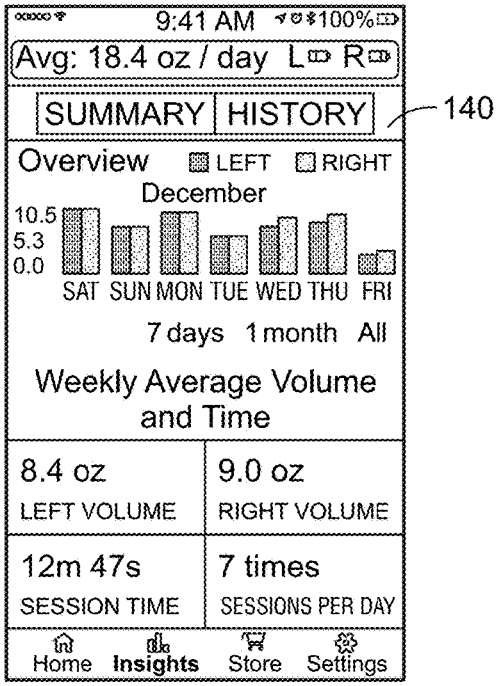

FIG. 40

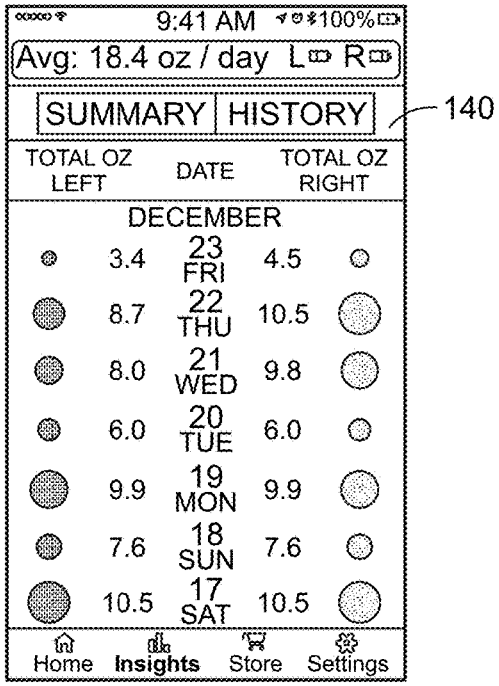

FIG. 41

BREAST PUMP ASSEMBLY AND METHODS

FIELD OF THE DISCLOSURE

[0001] The present disclosure generally relates to portable breast pump systems and methods for collecting milk from a breast of a nursing mother.

BACKGROUND OF THE DISCLOSURE

[0002] As more women become aware that breastfeeding is the best source of nutrition for a baby, and also offers health benefits to the nursing mother, the need is increasing for breast pump solutions that are user-friendly, quiet, discrete and versatile for use by a nursing mother in various situations. This is particularly true for the working mother, who is away from the home for eight to ten hours or more and needs to pump breast milk in order to have it available for her baby, but it is also a requirement for many other situations where the mother is away from the privacy of the home for an extended period, such as during shopping, going out to dinner or other activities.

[0003] Although a variety of breast pumps are available, a number are awkward and cumbersome, requiring many parts and assemblies and being difficult to transport. Hand pump varieties that are manually driven are onerous to use and can be inconvenient to use. Some powered breast pumps require an AC power source to plug into during use. Some systems are battery driven, but draw down the battery power fairly rapidly as the motorized pump continuously operates to maintain suction during the milk extraction process. Many of the breast pumps available are clearly visible to an observer when the mother is using it, and many also expose the breast of the mother during use.

[0004] There is a continuing need for a small, portable, self-powered, energy efficient, wearable breast pump system that is easy to use, that mimics natural nursing, and is discrete by not exposing the breast of the user and nearly unnoticeable when worn.

[0005] To ensure that the nursing baby is receiving adequate nutrition, it is useful to monitor the baby's intake. It would be desirable to provide a breast pump system that easily and accurately monitors the volume of milk pumped by the system, to make it convenient for the nursing mother to know how much milk has been extracted by breast pumping. It would also be desirable to track milk volume pumped per session, so that the volume of milk contained in any particular milk collection container can be readily known.

[0006] There is a continuing need for a breast pump system that is effective and convenient to use. The present disclosure addresses these and other needs.

SUMMARY OF THE DISCLOSURE

[0007] Briefly and in general terms, the present disclosure is directed toward breast pump systems or methods. The system includes breast contacting structure and a collection or storage container or assembly, and structure that delivers milk from a breast to the collection assembly. The method involves pumping milk from a breast and delivering the pumped milk into the collection assembly or storage container. In one particular aspect, the breast pump system responds in real time to optimize pumping action for a particular user during a particular pumping session.

[0008] According to one aspect of the present disclosure, a system for pumping milk from a breast includes one or more of: a skin contact member or flange configured to form a seal with the breast; a conduit in fluid communication with and connected to the skin contact member; a driving mechanism configured to establish a vacuum profile within the conduit; an external shell; a milk collection container; and a non-transitory computer readable medium having stored thereon instructions executable by a computing device to cause the computing devices to perform functions associated with and directed by the instructions; wherein the external shell comprises a compartment; wherein the skin contact member, the conduit and the driving mechanism are received in the compartment of the external shell; wherein the milk collection container is positionable within the shell; and wherein the system is shaped and configured to be contoured to the breast of a user.

[0009] In one or more embodiments, the system can include one or more of structure configured to address fluid ingress, pinch protection structure, a flex-tube structured to accomplish efficient and predictable pumping of fluid and the creation of desirable pressure profiles, and cooperating structure for fluid collection secure attachment and removal.

[0010] In various embodiments, the storage container can be specifically configured to prevent kinking and for durability and handling. The storage container can be designed to hold, accept or retain milk or other fluids. A flow feature can be incorporated into the storage container in the form of a scallop structure, valves and materials can be chosen to facilitate removing air or gases, tabs and wings can be provided for handling, and structure adapted for the removal of milk from a collection assembly.

[0011] In various of the disclosed embodiments, the system defines a breast profile. The natural breast profile is contemplated to fit comfortably and conveniently into a bra of a user and to present a natural look. As such, the profile is characterized by having a non-circular base. Moreover, like natural breasts, the profile of the device or system is contemplated to define one or more asymmetric curves and off-center inertial centers. In one aspect, the system defines a breast enhancement system for enlarging the appearance of the user's breast.

[0012] In at least one embodiment, the system functions by operating a control system that tracks internal pressure of the system against a known waveform. In this regard, the waveform can be a vacuum waveform indicative of pressures applied to a breast, and can define a sine wave fluctuating between about 60 mmHg of vacuum to a vacuum from about 120 mmHg to about 250 mmHg, or other desirable or useful waveform.

[0013] In one or more embodiments, the system includes a controller that accomplishes real time pressure control inside the system.

[0014] In one or more embodiments, the system includes a controller providing automated compliance sensing and response.

[0015] In one or more embodiments, the system includes a non-contact pressure sensing arrangement that does not touch the skin or the milk inside the tube while accurately determining internal pressure of the tube.

[0016] In one or more embodiments, the system includes one or more controllers that automatically detects one or more of letdown, overfill and flow.

[0017] In one or more embodiments, the system is disabled when the flange is not placed in an operating position.

[0018] In one or more embodiments, the system can be adapted to visualize a user's data and trends as it relates to volume (from each breast and total), and number of sessions on several dimensions (per day, per week and per month). Data and analytics can also be provided on pumping session.

[0019] In at least one embodiment, the flange or skin contact member, the conduit, the driving mechanism, the external shell and the milk collection container are all contained within a cup of a brassiere. In other embodiments, the container need not be contained within the housing, and the pump need not be in a cup of a brassiere, but can be unsupported or supported by itself or by other clothing or a nursing tank top or a band surrounding the user's body.

[0020] In at least one embodiment, the system is battery powered, the system comprising a battery, wherein the battery is received in the compartment of the external shell.

[0021] In at least one embodiment, the milk collection container comprises a one-way valve that permits milk inflow into the milk collection container but prevents milk backflow from the milk collection container to the conduit. In one embodiment, the collection container or container assembly includes an extra part, valve or fitment that is attached thereto and facilitates creating a seal with the container to establish a closed system. In one embodiment, the milk container can include a one-way valve that cannot be removed without destroying milk container or valve function. The valve can assume a myriad of shapes and kinds including an umbrella valve, a duckbill valve, a ball valve or other valve. Moreover, in one or more embodiments, the container can be flexible or rigid, or disposable or reusable.

[0022] According to another aspect of the present disclosure, a system for pumping milk from a breast includes one or more of: a flange or skin contact member configured to form a seal with the breast; a conduit in fluid communication with and connected to the skin contact member; a driving mechanism configured to establish a vacuum profile within the conduit by cyclically compressing and allowing decompression of a portion of the conduit; and an external shell containing the conduit and the driving mechanism and supporting the skin contact member.

[0023] In at least one embodiment, the system further includes a milk collection container, wherein the milk collection container is in fluid communication with the conduit.

[0024] In at least one embodiment, the skin contact member includes: a breast contact portion configured and dimensioned to fit over and form a seal with a portion of the breast; and a nipple receiving portion extending from the breast contact portion.

[0025] According to another aspect of the present disclosure, a method of operating a system for pumping milk includes one or more of: providing the system comprising a skin contact member configured to form a seal with the breast, a conduit in fluid communication with and connected to the skin contact member; a driving mechanism including a compression member configured to compress and allow decompression of the conduit in response to inward and outward movements of the compression member, a sensor, and a controller configured to control operation of the driving mechanism; sealing the skin contact member to the breast; operating the driving mechanism to generate predetermined pressure cycles within the conduit; monitoring by the controller of at least one of position and speed of movement of the compression member relative to the conduit; measuring or calculating pressure within the conduit; maintaining or modifying motion of the compression member as needed, based upon feedback from the calculated pressure and at least one of force, position and speed of movement of the compression member, to ensure that the predetermined pressure cycles continue to be generated.

[0026] In at least one embodiment, the predetermined pressure cycles comprise extraction pressure cycles, and the controller increases a stroke distance of the compression member relative to an amount of milk entering the conduit, to maintain predetermined pressures during the extraction pressure cycles.

[0027] In at least one embodiment, the predetermined pressure cycles comprise latch cycles, wherein upon determination that milk has entered the conduit or after a predetermined period of time, the controller operates the compression member to achieve predetermined extraction pressure cycles, wherein the predetermined extraction cycles differ from the predetermined latch cycles by at least one of maximum suction level, cycle frequency or waveform shape. Moreover, in one or more embodiments, the system includes structure or functions to recognize when a user is done pumping, or includes structure or functions such that when there is a loss of vacuum recognition which allows the user to easily end a pumping session by simply pausing and pulling the device off of the breast. Additionally, in one or more embodiments, the system can include an auto-purge function or an accelerometer functioning as gesture recognition so that the device can interpret what the user is attempting to accomplish.

[0028] According to another aspect of the present disclosure, a system for pumping milk includes one or more of: a flange or skin contact member configured to form a seal with a breast; a conduit in fluid communication with and connected to the skin contact member; a driving mechanism including a compression member configured to compress and allow decompression of the conduit in response to inward and outward movements of the compression member; a sensor; and a controller configured to control operation of the driving mechanism; wherein upon sealing the skin contact member to the breast, the controller operates the driving mechanism to generate predetermined pressure cycles within the conduit, monitors at least one of position and speed of movement of the compression member relative to the conduit, measures or calculates pressure within the conduit based upon signals received from the sensor, and maintains or modifies motion of the compression member as needed, based upon feedback from the calculated pressure and at least one of force, position and speed of movement of the compression member, to ensure that the predetermined pressure cycles continue to be generated.

[0029] These and other features of the disclosure will become apparent to those persons skilled in the art upon reading the details of the systems and methods as more fully described below.

BRIEF DESCRIPTION OF THE DRAWINGS

[0030] FIG. **1**A shows a perspective view of a breast pump system according to an embodiment of the present disclosure.

[0031] FIG. **1**B is a rear view, depicting the flange of the pump system of FIG. **1**A.

[0032] FIG. **2** shows a front view of the system of FIG. **1** with the shell removed.

[0033] FIG. **3** depicts a back view of the system of FIG. **1** with the flange removed.

[0034] FIG. **4** is a cross-sectional side view of the system of FIG. **1**.

[0035] FIG. **5** is an inside view of the system of FIG. **1**, depicting the flex conduit of the pump assembly.

[0036] FIG. **6**A is an exploded view of the system of FIG. **1**, depicting mechanical components of the system.

[0037] FIGS. **6**B-D depict views of an alternative approach to housing structure.

[0038] FIGS. **6**E-G depict views of yet another alternative approach to housing structure.

[0039] FIG. **6**H is a perspective view, depicting a first approach to a system including a removable battery structure.

[0040] FIG. **6**I is a perspective view, depicting a second approach to a system including a removable battery structure.

[0041] FIG. **6**J is a perspective view, depicting a third approach to a system including a removable battery structure.

[0042] FIG. **7**A is a schematic representation, depicting operational components of the system.

[0043] FIG. **7**B is a graphical representation, depicting motor position and vacuum versus time.

[0044] FIG. **7**C is a graphical representation, depicting motor position versus volume.

[0045] FIG. **8** is a top view, depicting one embodiment of a storage collection assembly of the present disclosure.

[0046] FIG. **9** is an enlarged view, depicting a neck and valve of the storage collection assembly of FIG. **8**.

[0047] FIG. **10** is an enlarged view, depicting a valve assembly of the storage collection assembly.

[0048] FIG. **11**A is a perspective view, depicting a storage collection assembly connected to the system.

[0049] FIG. **11**B is a perspective view, depicting a first step in installing a collection assembly.

[0050] FIG. **11**C is a perspective view, depicting a second step in installing a collection assembly.

[0051] FIG. **11**D is a top view, depicting a third installation step.

[0052] FIG. **11**E shows yet another collection assembly installation step.

[0053] FIG. **12** is a cross-sectional view, depicting a portion of the system.

[0054] FIG. **13** is a perspective view, depicting a door assembly of the system.

[0055] FIG. **14** is a cross-sectional view, depicting details of the door assembly.

[0056] FIG. **15** shows details of the door assembly.

[0057] FIG. **16** is an enlarged view, depicting structure of a pinch protection assembly.

[0058] FIG. **17** is an enlarged view, depicting other structure of a pinch protection assembly.

[0059] FIG. **18** is a perspective view, depicting a flex circuit of the system.

[0060] FIG. **19** is a top view, depicting a user interface assembly.

[0061] FIG. **20** is a bottom view, depicting further details of the user interface assembly.

[0062] FIG. **21** shows power access support structure of the system.

[0063] FIGS. **22-28** depict various aspects of a remote user interface system.

[0064] FIGS. **29-41** depict various further aspects of a remote user interface system.

DETAILED DESCRIPTION OF THE DISCLOSURE

[0065] Before the present systems and methods are described, it is to be understood that this disclosure is not limited to particular embodiments described, as such may, of course, vary. It is also to be understood that the terminology used herein is for the purpose of describing particular embodiments only, and is not intended to be limiting, since the scope of the present disclosure will be limited only by the appended claims.

[0066] Where a range of values is provided, it is understood that each intervening value, to the tenth of the unit of the lower limit unless the context clearly dictates otherwise, between the upper and lower limits of that range is also specifically disclosed. Each smaller range between any stated value or intervening value in a stated range and any other stated or intervening value in that stated range is encompassed within the disclosure. The upper and lower limits of these smaller ranges may independently be included or excluded in the range, and each range where either, neither or both limits are included in the smaller ranges is also encompassed within the disclosure, subject to any specifically excluded limit in the stated range. Where the stated range includes one or both of the limits, ranges excluding either or both of those included limits are also included in the disclosure.

[0067] Unless defined otherwise, all technical and scientific terms used herein have the same meaning as commonly understood by one of ordinary skill in the art to which this disclosure belongs. Although any methods and materials similar or equivalent to those described herein can be used in the practice or testing of the present disclosure, the preferred methods and materials are now described. All publications mentioned herein are incorporated herein by reference to disclose and describe the methods and/or materials in connection with which the publications are cited.

[0068] It must be noted that as used herein and in the appended claims, the singular forms "a", "an", and "the" include plural referents unless the context clearly dictates otherwise. Thus, for example, reference to "a sensor" includes a plurality of such sensors and reference to "the pump" includes reference to one or more pumps and equivalents thereof known to those skilled in the art, and so forth.

[0069] The publications discussed herein are provided solely for their disclosure prior to the filing date of the present application. The dates of publication provided may be different from the actual publication dates which may need to be independently confirmed.

[0070] Various details of the present system can be found in PCT Application Nos. PCT/US15/41257, PCT/US15/41271, PCT/US15/41277, and PCT/US15/41285 each filed Jul. 21, 2015, and PCT/US15/50340 filed Sep. 16, 2015, each of which are hereby incorporated herein, in their entireties, by reference thereto.

[0071] FIGS. **1**A-B are perspective and back views of a breast pump system **10** according to an embodiment of the present disclosure. The breast pump system **10** can include one or more of the below introduced or described features or functions, or a combination thereof. The housing or outer

shell **12** of system **10** can be shaped and configured to be contoured to the breast of a user and to thus provide a more natural appearance when under the clothing of the user. As can be appreciated from the figures, the system can define a natural breast profile. The natural breast profile is contemplated to fit comfortably and conveniently into a bra of a user and to present a natural look. As such, the profile is characterized by having a non-circular base unlike that embodied in a generally dome-shaped configuration. Extending from the base are curved surfaces having asymmetric patterns. Moreover, like natural breasts, the profile of the device or system is contemplated to define one or more asymmetric curves and off-center inertial centers. Various natural breast shapes can be provided to choose from to the tastes and needs of a user. An opposite side of the pump system **10** is configured with a flange **14** which is sized and shaped to engage a breast of a user. The flange **14** is contoured to comfortably fit against a wide range of user's bodies and to provide structure for sealingly engaging with breast tissue. In one particular embodiment, the flange **14** can form generally rigid structure, and alternatively or additionally unlike a standard flange can lack sharp edges or a lip portion against which breast tissue might be engaged during use. In this regard, the flange includes surfaces that extend outwardly from a nipple receiving portion of the flange to engage breast tissue, thus providing extra surface area for comfortably contacting tissue. Various approaches are contemplated to the flange with respect to a user's nipple. One approach involves aligning a horizontal line formed within the flange structure a bit higher than center with the rationale that the perspective of the mother is from above. This perspective allows the user to better align the breast with the horizontal line to better center the nipple in the actual center of a nipple receiving portion of the flange, thus offsetting any tendency to aim/line up low associated with centered lines because the user's perspective is from above the line and also because the device is pivoted into place in certain instances.

[0072] FIG. **2** is a front view of the system **10** of FIG. **1**, with the housing or outer shell **12** having been removed and made transparent to show components otherwise covered by the housing **12**. In particular, with the housing **12** removed, various electronic components can be identified. The system controller is embodied in a circuit board **15** that is in communication with a flex-circuit **16**, each cooperating to connect to and control various electro-mechanical components of the system **10**. A control panel **17** is in electronic communication with the controller via the flex-circuit **16** and provides the user with the ability to power the system on and off as well as to alter functioning. One or more motors **44**, **46** are further provided and controlled electronically by the system to effect manipulation of actuators (described below) operating on a conduit or flex-tube **32** (See FIGS. **4** and **5**). A battery **48** is included to provide a rechargeable power source and is configured to be plugged into a power source for charging. Further, there is provided a load cell assembly **54** that is configured to provide a pressure sensing function as described below. It is contemplated that at least in one embodiment, the conduit or flex-tube **32** is oriented to run from inferior to superior relative to the nipple of a breast when the user is upright.

[0073] FIG. **3** shows an opposite side of the system **10** with the flange **14** removed to illustrate more details of the pumping function. The conduit or flex-tube **32** (See FIGS. **4-6**) includes generally spherically shaped connectors **33** that are sized and shaped to be removably received in recesses **34** formed in a pump chassis **35**. The connectors **33** are designed to automatically engage with moving motor paddles without the user being aware or having to make adjustments, or assemble parts. The pump chassis **35** functions to support the electronic and electro-mechanical structures of the system **10** (See also FIG. **2**). It also provides spacing for a pinching actuator **36** that is configured to be advanced and retracted toward and away from the conduit or flex-tube **32** as described further below. Other pumping action is accomplished through the engagement of the conduit or flex-tube **32** with recesses **34** by a compression and expansion member **38** (See FIG. **7**A). Embossed engraving is further provided within a well formed in the chassis **35**, the engraving providing product and other information relevant to the breast pump. In this way, certain adhesive labels need not be applied to the breast pump structure.

[0074] In general, real-time pressure control can be managed by a controller of the system **10**. The controller tracks pressure and moves a pump motor either in or out to influence the pressure in the direction of its choosing. By way of oscillating motion of the motor, the pump can be configured to pull on the connectors **33** of the conduit or flex-tube **32** structure to increase its volume. If there is vacuum in the system **10** that vacuum can be increased as the volume of the tube increases. Pushing in the tube decreases its volume. This in turn causes the vacuum level to decrease in the tube, and can cause a relative positive pressure if vacuum decreases enough. The pump controller applies these principles, sensing the current pressure and then nudging a compression member or paddle of the motor assembly in a direction required to generate a pressure target. By doing this repeatedly in real time, the system can create a controlled vacuum waveform that matches waveforms desired to be applied to a user's nipple.

[0075] The pump can slowly pull the compression member or paddle out until it hits a pre-determined target. Should the paddle be moved to the end of its range without being able to generate a desired vacuum, the system will be purged to generate more vacuum potential. The purge functions to push material out of the system to create a strong vacuum potential. It accomplishes this by first closing a pinch on the conduit or flex-tube or closing off the flex-tube with a flap, dam, etc., then evacuating the flex-tube, for example, by pushing closed the paddle, which forces volume out of the flex-tube and any fluid or air that was inside that volume is also ejected through the one-way valve and into the collection receptacle. When the paddle retracts again, it can then generate much higher vacuum as contents of the tube had been previously purged. Once a higher vacuum can be generated, the system can open the pinch valve so that the desired vacuum profile can be applied to a breast and desired pressure waveform can be produced.

[0076] When the system is filled with air, it is very compliant such that a large change in motor positioning makes only a small change in vacuum. When the system is filled with fluid on the other hand, a small change in motor positioning makes a big change in vacuum. In one particular approach, an encoder including a plurality of spaced magnets is associated with the motor. The magnets can be placed along a periphery of a generally disc shaped encoder with the magnets oriented parallel to the axis of rotation of the encoder. One or more hall effect sensors can be configured

on or surface mounted to the circuit board **15** and positioned to read the motion and position of the magnets. In this way, the position of the motor can be determined and monitored. Thus, a challenge can be to configure the system so that it is stable when the system is responsive, and effective when it is not as responsive. One contemplated approach is to tune the controller for a relatively rigid system and to input unit-less quantities that move the motor in required directions where the amplitude of which is modified depending on the output of the system. Accordingly, a cascade controller can be created to grow an input wave if system output is smaller than desired to hit pressure targets and can be shrunk if the system output is larger than required. This can be accomplished in real time by observing output verses input. In this way, the controller can be continuously adjusting target waveforms. Top half and bottom half waveforms can have independent control which facilitates centering waveforms in an effective manner, and results in a system that is both very accurate and quick to adjust.

[0077] The system can further be provided with automated letdown detection. The pump can sense when it is full of fluid and responds accordingly by switching between pumping and letdown when fluid has begun to flow. In one approach an algorithm incorporated into the system can operate to look at the ratio of maximum and minimum of a target wave in the pump and compare that against the output of the pump. The result is a unit-less but very reliable sensing of system compliance. This can be tuned to trigger an internal event when the compliance crosses some known values that represent when the system is full of fluid. Any other measurement of compliance can be used in an equivalent way.

[0078] In another approach to letdown detection, it is noted that pushing a tube of air does not generate the same forces as pushing a tube of fluid. Tracking the force generated during a purge can also give a strong indication of when the system is full of fluid. An event can be generated to track this such that when the force of a purge crosses some known threshold the system can be said to be full of fluid rather than air. This approach may involve less tracking of data and less tuning that is subject to change with pump design or breast tissue. In yet another approach, letdown detection can be based upon tracking flow. That is, when flow begins, letdown must have occurred and when a small volume of flow has been collected the system can switch to pumping. Further, letdown can be tracked by looking at the relative rate of change of vacuum measured to motor position. Note that this relative rate of change is a measurement of compliance. As this ratio goes up in magnitude, it can be concluded that the system is filling with fluid.

[0079] FIG. **4** illustrates a cross-section of components of a system **10** according to an embodiment of the present disclosure. Flex-tube or conduit **32** (isolated in FIG. **5**) includes a large conduit portion **32**L that is relatively larger in cross-sectional inside area than the cross-sectional inside area of small conduit portion **32**S. The large conduit portion **32**L terminates with an opening sized for cleaning and is generally sized to accept a small finger tip. Although both portions **32**S and **32**L are shown as tubular portions, the present disclosure is not limited to such, as one or both portions could be shaped otherwise. When tubular, the cross-sections may be oval, square, other polyhedral shape, non-symmetrical, or non-geometric shape. Further, the flex-tube **32** can include an enlarged bulbous portion **32**B configured near a terminal end of the large conduit portion **32**L that is provided to help accommodate system hysteresis.

[0080] FIG. **6**A depicts an exploded view of structural and mechanical components of the system **10**. Configured between the housing **12** and flange **14** is the chassis **35**. Notably, the chassis can be configured to snap into engagement with the housing **12**. Moreover, in a preferred embodiment, the chassis **35** supports directly or indirectly all of the pump components. In particular, a PCB controller mount **62** is supported by the chassis **35** and is configured to be connected to and support the circuit board **15** (See also FIG. **2**). A battery bracket **64** is also supported by the chassis **35** and is sized and shaped to receive a rechargeable battery **48** assembly that powers the system **10**. A cover jack **65** is further included to provide access to the battery assembly and for accepting a power cord connector (not shown). Motor mounting **66** and motor receiver structure **67** is also supported by the chassis **35** and are configured to receive and support the system motor which is powered by the battery and which functions to move actuators operating on the conduit or flex-tube **32**. Also supported by the chassis **35** are an actuator bracket **69**, and a load cell bracket **70** and load cell receiver **71**. Moreover, user interface panel can include a button membrane **72** and a button membrane housing **73** each supported on the housing **12** and placed in engagement with the flex-circuit **16** that provides the user with system control.

[0081] In order to connect the conduit or flex-tube assembly **32** to the system **10**, there are provided a flex-tube ring **80** and a flex-tube collar **82**. The flex-tube collar **82** is sized and shaped to be received into slots **84** on the flange. A fluid container fitment **86** (shown in isolation from the container) is sized and shaped to be received into the flex-tube collar **82**. A door assembly **90** is attached to the flange **14** and configured to swing open and closed to both provide access to an interior of the system **10** as well as to support a robust connection between the fitment **86** and flex-tube collar **82**. Accordingly, it is contemplated that in at least one embodiment, the collection or container assembly is supported and maintained in attachment by friction around a shaft of the conduit to the collection or container assembly, and partially by the door assembly **90** which can enclose and hold the collection or container assembly in place. In alternative embodiments, the breast pump assembly can omit a door assembly entirely. Thus, the flange itself can include structure for retaining the container assembly in place. Moreover, the door assembly or other structure that replaces the door assembly can be transparent so that a direct view to the container assembly is provided.

[0082] In alternative embodiments, the housing **14** is defined by an irregular shape that includes contours that track or mimic the internal components and structure of the pump system. In one particular approach as shown in FIGS. **6**B-D, an outer surface of the housing **14** is characterized by an irregular shaped indentation **91**, providing the outer surface with an irregular shape. Various differently shaped indentations **91** can be employed (See also FIGS. **6**E-G). Various configurations of a separate breast cup skin or interface structure **98** is sized and shaped to fit over the housing **14** and indentation **91** to form a desired shape such as the breast shape depicted in the figures. It is noted that the breast pump system can work with or without the breast cup skin or interface structure. Alignment and attachment structure or holes can be further provided to facilitate the mating

of the interface structure **91** with the housing **14** and the interface structure can assume a myriad of colors, textures and durometer to enhance or change tackiness, softness for security and outer feel in the bra. Various other breast and other shaped can also be provided.

[0083] In yet further combined or separate embodiments (See FIGS. **6**H-J), the housing **14** can be adapted or configured to additionally or alternatively accommodate a replaceable battery. Here, the housing **14** includes various other shaped indentations **91** sized and shaped to accommodate the battery. In this approach, the battery includes its own attachable housing **99** that mates with the housing **14** indentation **91**, the housing **14** covering other pumping structures. In one approach, mating features include flat, right-angled structures, and alignment and attachment holes and structures are further provided.

[0084] As shown schematically in FIG. **7**, latching, pumping and extraction forces can be established by two compression members **36**, **38** that are actively driven by motor drivers **44** and **46** respectively. Although more than two compression members could be used and one or more than two drivers could be used, the currently preferred embodiment uses two compression members respectively driven by two drivers as shown. A system controller or system software and/or firmware controls the action of the drivers in real time, responsive to pre-determined latching and production targets or schemes as detected by the pressure sensor or load cell assembly. The firmware can be written so that such targets can be approached at various speeds, sometimes relatively quickly and other times more slowly or gently to thereby provide multiple stimulation and expression levels. Thus, for example, latch can be achieved taking alternatively more gradual or quicker approaches, and there can be controls determining the level at which latch is achieved. Various levels of suction can be present during expression as well. Tubing portions **32**S and **32**L can be closed off, or substantially closed off by compression members **36** and **38**, respectively. Moreover, such active pumping members can be configured to engage upon a tubing channel generally perpendicularly to the net flow of fluid or milk within the channel. Also, a pinch region of the tubing channel can be configured to open through passive recoil located next to a compression region of the tubing channel which opens through an assistive active support. Upon powering up the system **10** the compression member **36** opens and the compression member **38** begins to withdraw away and through its connection to structure such as the ball connector of the conduit or flex-tube **32** thereby gradually increases the suction level within tubing **32**. When a predetermined maximum suction level is achieved (as confirmed by pressure readings taken from a pressure sensor, described below), the compression member **38** ceases its travel in the current direction, and either maintains that position for a predetermined period of time (or moves slightly in the same direction to compensate for decreasing suction as milk enters the system) when the operating mode of the system **10** has a predetermined time to maintain maximum suction, or reverses direction and compresses the tube **32**L until the latch suction level is achieved. If the maximum suction level has not yet been achieved by the time that the compression member can be fully retracted away on the first stroke, then the compression member **36** again compresses the tube **32**S to seal off the current vacuum level in the environment of the breast, and the compression member **38** fully compresses the tube portion **32**L to squeeze more air out of the system. Then the compression member **36** reopens to fully open tube portion **32**S and compression member carries out another stroke, again moving away to generate a greater suction level. This cycling continues until the maximum suction level is achieved. It is noted that it is possible in some cases to achieve the maximum suction level on the first stroke, whereas in other cases, multiple strokes may be required.

[0085] Upon achieving the maximum suction, the system may be designed and programmed so that the compression member **38** does not travel to its fullest possible extent in either direction to achieve the maximum and latch suction levels, so as to allow some reserve suction and pressure producing capability. When the maximum suction level has been achieved, and the pumping profile can return to latch vacuum, the compression member **38** advances compressing tubing portion **32**L, thereby raising the vacuum in the tubing **32**. Upon achievement of the latch suction vacuum, compression member **36** closes off the tubing **32**S again to ensure that the latch vacuum is maintained against the breast, so that sufficient suction is maintained. At this stage, the compression member **38** again begins moving away to increase the suction level back to maximum suction, and compression member **36** opens to allow tube **32**S to open and the breast **2** to be exposed to the maximum suction. Alternatively, the system may be programmed so that the compression member **38** cycles between maximum and latch suction levels without the compression member **36** closing during a point in each cycle, with the compression member **36** closing when the latch vacuum is exceeded.

[0086] Upon commencing milk extraction, the compression member **36** and compression member **38** can function in the same manner as in latching, but in a manner that follows an extraction waveform determined by the selected extraction pumping determined in real time by system controls which are responsive to the load cell assembly or pressure sensing assembly. At this stage, any sounds created by the pumping action of the system are decreased as milk or fluid flows through the pump mechanism. During the compression stroke of compression member **38**, compression member **36** closes when the latch pressure/suction level is achieved. Continued compression by the compression member **38** increases the pressure in the tubing **32** downstream of the compression member **36** to establish a positive pressure to drive the contents (milk) of tube portion **32**L out of the tube portion **32**L through smaller tubing portion **32S2** downstream of **32**L and out through a one-way valve. The positive pressure attained is sufficient to open the one-way valve for delivery of the milk out of the tubing **32** and into a milk collection container. In one embodiment, the positive pressure is in the range of 20 mm Hg to 40 mm Hg, typically about 25 mm Hg. Upon reversing the motion of compression member **38**, compression member **36** opens when the suction level returns to the latch suction level and compression member **38** continues to open to increase the suction level to the maximum suction level.

[0087] The present disclosure can establish a latch vacuum to cause the flange or skin contact member/breast **14** to seal to the breast. The latch vacuum established by the system is currently about 60 mmHg, but can be any value in a range of from about 20 mmHg to about 100 mmHg. Once the system **10** has been latched to the breast via skin contact member **14**, the system then cycles between the latch vacuum and a target (also referred to as "peak" or "maxi-

mum") suction level. Due to the fact that the system **10** does not cycle down to 0 mmHg, but maintains suction applied to the breast, with the minimum end of the suction cycle being the latch suction level (e.g., about 60 mm Hg), the nipple does not contract as much as it would with use of a prior art breast pump system. It has been observed that the nipple draws into the skin attachment member **10** with the initial latch achievement in an analogous fashion as the formation of a teat during breastfeeding. Once the vacuum cycles between the latch and target vacuum levels, there is significantly less motion of the nipple back and forth with the vacuum changes, as compared to what occurs with use of prior art systems. The nipple motion (distance between fully extended and fully retracted) during use of the present system is typically less than about 2 mm, and in some cases less than about 1 mm. Accordingly, the system provides latching that is not only more like natural nursing, but the reduced nipple motion is also more like natural nursing as evidenced by scientific literature. In one particular approach, the system can employ ultrasound to observe nipple motion during pumping to ensure that desired nipple motion is achieved.

[0088] This greatly reduced motion of the nipple during cycling results from establishment of the latch at latch vacuum level, and then limiting the range of vacuum swing between latch vacuum (suction) and peak vacuum (suction). Typically the difference in vacuum between latch vacuum and peak vacuum is less than 200 mmHg, more typically less than 150 mmHg. In one example, the latch vacuum was 50 mmHg and the peak vacuum was 200 mmHg, resulting in a vacuum difference of 150 mmHg.

[0089] Limiting the nipple motion as described with use of the present system offers several benefits to the user. One benefit is that there is less friction on the side of the nipple against the flange wall, thereby greatly reducing the risk of irritation, skin damage, pain, swelling, etc. As a result, the present system is significantly more comfortable to use by a nursing mother, and this benefit is increasingly noticeable over repeated uses. By maintaining at least a latch suction level at all times, the present system provides a more secure and persistent seal to the breast and significantly reduces the potential for leaks of air and/or milk. Because the nipple moves significantly less, this provides a more "natural" feel to the user that more closely simulates the feel of a nursing baby. Because the nipple travels less, this allows for the skin attachment member/flange **14** to be designed as a lower profile component, as its length can be shorter since it does not need to accommodate the greater length in nipple movement experienced by prior art systems. This allows the overall amount of protrusion of the system **10** from the breast to less than that in the prior art, as the overall length of the system is reduced by the reduction in length of the skin contact member/flange **14**. Thus, the distance from the tip of nipple to exposed end of the housing the system is reduced.

[0090] The breast contact portion can be symmetrical about the nipple receiving portion although, alternatively, the nipple receiving portion could be offset. The skin contact member **14** is designed to reduce the internal volume of the nipple receiving portion, which is enabled by the significantly reduced amount of motion experienced by the nipple during a milk extraction process using a system **10** including skin contact member **14**, according to the present disclosure. The nipple receiving portion of the skin contact member **14** is contoured to more closely match the natural shape of the nipple, thereby eliminating or significantly reducing dead space that exists around the nipple in prior art systems. The nipple receiving portion can be cylindrical in the portion adjoining the breast contact portion, and then can taper conically. This design allows for receiving a portion of the areola into the nipple receiving portion while also limiting dead space. The diameters of all cross-sections of the nipple receiving portion are contemplated to be large enough to allow nipple dilation. The length of the nipple receiving portion can be about 23 mm and the length may vary within a range of about 22 mm to about 29 mm. The length of the nipple receiving portion is sufficient to allow engorgement of the nipple under vacuum, without the distal tip of the nipple contacting the proximal end of the nipple receiving portion. In an alternative approach, the nipple receiving portion can be sized and/or shaped to mimic the anatomy of a child that is nursing. In this regard, rather than being generally cylindrical, the nipple receiving portion define more of a natural mouth shape or a generally rectangular sleeve with rounded corners and curved surfaces. The teat of the breast is thus formed into a more natural nursing shape by the natural shaped nipple receiving portion.

[0091] The internal contour **120** of the flange **14** is designed for use with the present system **10** and to maximize comfort of the user. The internal angles and generally flat portions also facilitate the ability to restrict portions of the breast from moving forward too much into the nipple receiving portion. The wider angle helps to prevent the breast tissue from being funneled into the nipple receiving portion, so that less breast tissue is received in the nipple receiving portion, making use of the flange **14** more comfortable than flanges of the prior art and providing space for nipple engorgement. By providing the wider angles, this also allows the overall system to be effectively shortened and allows the system to lie flatter against the breast to improve both comfort and appearance.

[0092] In one embodiment, the total system volume is about 24.0 cc. The total volume is calculated as the space in the nipple receiving portion (that is not occupied by the nipple) and tube portions **32**S, **32**L and **32S2** up to the milk collection or container assembly. In the embodiment with total system volume of about 24.0 cc, the active pump volume, i.e., the volume displacement achievable by compressing tube portion **32**L from fully uncompressed to the limit of compression by compression member **38** is about 3.4 cc. When there is only air in the tubing **32** of the system **10**, pressure swing by moving the compression member **38** inwardly against the tubing portion **32**L and outwardly away from the tubing portion is limited, due to the compressibility of the air. In this embodiment, with the system under vacuum of −60 mmHg, a full stroke of the compression member (from compressed to fully uncompressed tube portion **32**L) increases the vacuum to −160 mmHg. The ratio of pumping volume to total system volume can be important with regard to power and size of the pumping system. In this embodiment, the tube portion **32**L was made of silicone. It has been recognized that reduced motion of the compression members when pumping allows for more quiet action of the pump motor, and a more quiet system overall. Further, the present system employs the milk expressed as the medium for system hydraulics, and this medium is in direct contact with the user's breast against which a vacuum is drawn. Thus, the system can employ air suction against the breast

for initial latching and pumping and then converts to utilize expressed breast milk for pumping action or power.

[0093] During let down operation, the system **10** operates to effect let down of the milk in the breast, prior to extraction, with a maximum suction target of up to 120 mmHg (typically, about 100 mmHg (−100 mmHg pressure)) to establish let down. The goal of letdown (or non-nutritive suction) is to stimulate the breast to express milk. The relatively shallow (small vacuum change range) and relatively fast frequency of the pumping during this phase are meant to mimic the initial suckling action of a child at the breast. This is because during let down phase, the suction pressure is not allowed to exceed the maximum let down suction of 110 mmHg or 120 mmHg, or whatever the maximum let down suction is set at. Therefore, as the compression member **38** is drawn in a direction away from the tube portion **32**L, the system **10** is designed to reach −100 mmHg (a suction pressure of 100 mmHg) (or −120 mmHg, or whatever the maximum let down suction is designed to be), by the time that the compression member **38** has reached a position in which tube **32**L is mostly uncompressed.

[0094] During let down (non-nutritive) the system software and/or firmware communicates instructions to system motors based upon readings taken and communicated from the pressure sensing assembly so that the system is configured to operate between −60 mmHg and −100 mmHg in one example. In this example, the compression member **38** can compress the tubing portion **32**L nearly fully and then be moved away from the tubing portion **32**L to generate vacuum. The maximum latch suction pressure of −100 mmHg will be reached with a small amount of rebound of the tubing portion **32**L and the compression member **38** can be cycled relative to the tubing portion **32**L between −100 mmHg and −60 mmHg in a narrow range or band near full compression of the tube portion **32**L. As milk flows, that narrow band shifts at which point the tube portion **32**L will be purged by fully compressing it to drive out the contents and thereby regain more capacity for pumping with relatively less compression of the tube portion **32**L again.

[0095] The system **10** is responsive to pressure changes within the tubing **32** caused by entry of milk into the tubing **32**. Referring again to FIG. **7**, the compression elements **36** and **38** are operatively connected to a driver **44**, **46**, respectively, for independent, but coordinated driving and retraction of the compression elements **36**, **38**. When electrically-powered drivers are used, a battery **48** is electrically connected to the drivers **44**, **46**, as well as the controller **52** and pressure sensor **54**, and supplies the power necessary to operate the drivers **44**, **46** to drive the compression and retraction of the compression elements **36**, **38**.

[0096] The sensor **54** is used to provide feedback to the controller **52** for controlling the pumping cycles to achieve and/or maintain desired vacuum levels. Sensor **54** is preferred to be a load cell sensor providing data utilized to calculate system pressure, but could also be a pressure, flow, temperature, proximity, motion sensor or other sensor capable of providing information usable to monitor the safety or function of the pump mechanism of system **10**. As shown, sensor **54** is a non-contact sensor **54**, meaning that it is not in fluid communication with the milk or vacuum space of the system **10**.

[0097] As described above, the conduit or flex-tube **32** is placed in operative connection with a motor. An opposite side of the flex-tube **32** is equipped with the sensor **54** that takes the form of a load cell. The positioning of the motor is tracked and the force on the tube **34** is assessed to determine internal vacuum. By employing machine learning or supervised learning regression techniques, the system **10** can be trained to interpret the motor positioning and tubing strain (as well as motor speed or pump settings), while compensating for noise and hysteresis, to arrive at a pressure/vacuum level. More specifically, a neural net system or any mathematical regression of the data can be incorporated into system firmware so that sensor input can be translated to pressure/vacuum levels. In this regard, the system **10** can include or communicate with a non-transitory computer readable medium having stored thereon instructions executable by a computing device of the system or external to the system to cause the computing devices to perform functions associated with and directed by the firmware.

[0098] To train the neural net, large amount of data is generated, both from an accurate vacuum reading as well as strain gauge readings. All of the data is sent to software so that post processing can be conducted. It has been determined that data taken during normal pump flow lends itself best to training the system **10**. For example, data can be gathered when flow is at 2-3 ml/min, and when system pumping is slow at each pressure target. This approach ensures that the motor moves along its entire travel cycle relatively evenly and noise associated with high flow is not introduced into calculations. Highly controlled settings are also used to generate data so that unbiased data is generated. Further, system accuracy can be increased when using specifically generated neural nets for specific ranges of pressures. A special code is employed to isolate data from different pumping limits in training data, and uses only that data to generate a neural net that is used later when pumping to the same limits.

[0099] Turning now to FIGS. **8-10**, one embodiment of a collection or container assembly **60** is shown. In one particular embodiment, the collection or container assembly **60** can be formed from two 2.5-3.0 mil sheets of material that can be band welded or otherwise joined together along a perimeter **92** of the assembly, and can be sized to retain up to 4.5 ounces, or alternatively 8 ounces of fluid. In particular, the collection or container assembly **60** can be pre-formed to optimize or maximize the space inside the pump system and flange. For shipping, the collection or container assembly can be pulled closed with a vacuum to make it flat or thin for packaging or handling. A body of the collection or container assembly is generally bladder shaped and includes a generally asymmetrical oval central opening **93** created by an interior band seal. In one particular approach, the body can additionally include gussets to provide more volume. A pair of wings **94** extend into the central opening **93** and are provided for handling and facilitating positioning of the collection or container assembly **60** within a pump system **10**. A narrow neck portion **95** is centrally positioned and extends longitudinally away from the central opening **93**. The neck portion **95** includes a tab portion **96** that provides structure for grasping and removal, and can further include one or more cut-outs or tear-able elements **97** provided for aiding in tearing the container **90**. Further scoring is also contemplated to help in the tearing of the bag assembly **90**. Also, in alternative embodiments, the collection or container assembly **90** can be re-sealable, re-usable, include larger or smaller openings or include spout structure for pouring

contents. A spout can also be attached to the fitment or valve of the collection assembly to facilitate pouring. Such a spout could further include structure which temporarily or permanently defeats the valve or fitment. The valve of the collection or container assembly can also be re-usable with a second or subsequent collection or container assembly, and therefore is removable from the container assembly.

[0100] Moreover, in one particular embodiment, the collection or container assembly **90** can be made from polyethylene and can be bisphenol A free, as well as food grade material. It should be freezable without tearing and withstand approximately 0-80 degree Celsius temperatures. Additionally, tensile strength can be from 2300-2900 psi and tear strength from 440-600 psi, with a water vapor transmission rate max of about 0.5 g/100 in^2/24 hrs and an oxygen transfer rate of about 150 cc/100 in^2/24 hrs. In alternate embodiments, the material of the collection or container assembly can be Gore-tex or Tyvek, for example. Such alternative materials can permit out-gasing. Accordingly, a non-closed or un-sealed system is also contemplated. In this specific regard, other vents or approaches to venting the system can be incorporated into one or more embodiments. Thus, self-venting of the container assembly or active venting while using the pump system or after use can be accommodated. In one approach, a pressure valve can be incorporated into the system and configured to activate after some system pressure is reached, and further the valve can be designed to act as a fluid barrier, only allowing air and not fluid to escape.

[0101] It is contemplated that the system is configured to pump into a sealed collection or container assembly **60**, or one that includes an integral valve or an otherwise airtight collection or container assembly **60**, or combinations thereof. In this specific regard, the system can alternatively or additionally be closed and never vented to the atmosphere, and/or the system suction is only reduced through the flow of milk into the system. Thus, in at least one approach, milk or fluid that is pumped through the system is never exposed to new outside air from the environment once it enters the collection or container assembly. Accordingly, the orientation of the pump system or person has virtually no impact on the functioning of the system (i.e., no spills). The collection or container assembly can include a rigid or flexible sealing component, such as a ring or gasket into which the pump or container valve is pushed or twisted and sealed. The collection or container assembly can also include an opening or hole or structure that is pierced such that the container assembly seals about the member that goes into it. Moreover, there are contemplated a range of disposable and durable combinations of container **101** and valve fitment **102** arrangements such that one or both of the container bag **101** and fitment **102** are disposable or reusable. Additionally, the container can configured to be inside or outside of the pump housing.

[0102] The fitment **102** can embody a valve such as an umbrella valve assembly **103** or other type of one-way valve connected in fluid communication with the storage container **101**. The fitment can also assume a myriad of alternative embodiments, and can additionally or alternatively be formed integral with the container. For example, in one contemplated approach, the fitment and/or the valve can be formed as part of the container rather than define a separate component attached to the container. As shown in FIGS. **8-10**, however, the tail **104** of the umbrella valve **103** can be employed to defeat the valve when desired such as to remove gases, by turning it and engaging the tail against the valve body. Additionally, the valve includes a generally cylindrical portion having a diameter of approximately 0.585 inches extending from a flat base **104** having a width of approximately 0.875 inches. It is the flat base portion **104** that is captured and sealed between the two sheets of bag container material and includes a tail **106**. The tail **106** functions to ensure flow through the neck portion of the container assembly **60** particularly when it is placed into the pump assembly (See FIG. **11**A), and has a narrow, elongated shape that permits flow thereabout. That is, the tail **106** maintains flow through the neck even when the neck is folded as the container assembly is attached to the breast pump body. Valve **103** prevents back flow of milk into the flex-tube **32**, and facilitates maintaining the suction (vacuum) level in the flex-tube **32**. In other embodiments, other features can be provided or built into a valve to allow for depression or otherwise overcome the valve to vent air. Such approaches can involve a protrusion that is attached or associated with the valve so that as the protrusion is pushed toward the collection or container assembly, an edge of the valve is translated to thereby break the valve internal seal. Moreover, a nub can be attached to valve structure and configured inside the container assembly. Tugging on the nub through a layer of the container assembly thus results in freeing an edge of the valve and breaking the valve seal.

[0103] In at least one embodiment, the pressure at which the valve **103** opens to allow flow into the milk collection container **60** is about 25 mm Hg. The valve **103** can be configured and designed such that it allows fluid to flow through it when the pressure in conduit or flex tubing **32** is positive, e.g., about 25 mm Hg, or some other predesigned "crack pressure". The action of the compression elements cycles between increasing vacuum when the compression elements move in a direction away from flex-tube **32** and decreasing when the compression elements compress the flex-tube **32**, but typically should not increase the vacuum to greater than the predetermined maximum vacuum. As the compression elements **36**, **38** compress the flex-tube **32**, the pressure in the system **10** goes up and reaches the minimum suction level (e.g., latch suction level, such as −60 mmHg, −30 mm Hg, or some other predetermined latch suction level), at which time the compression member (pinch valve) **36** seals off portion **32**S thereby maintaining the minimum suction (latch suction) against the breast. Continued compression of portion **32**L by compression member **38** continues to increase the pressure downstream of compression member **36**, until the crack pressure is reached (e.g., 25 mm Hg or some other predetermined, positive crack pressure), that opens the valve **103**. The compression elements **36**, **38** continue compressing flex-tube **32**, pumping fluid (milk) through the valve **103** and into the collection container assembly **60** until the compression element **38** reaches an end point in travel. The end point in travel of the compression element **38** against portion **32**L may be predetermined, or may be calculated in real time by the controller **52** using feedback from pressure sensor **54** and feedback from the driver of the compression element **38**, from which the controller **52** can calculate the relative position of the compression element **38** over the course of its travel. The compression member **36** remains closed throughout this process, as it is used to seal off the tube **32** the entire time that the compression element **38** is pumping milk out into

the collection container assembly **60**. As the compression elements **36**, **38** reverse direction and pull away from the flex-tube **32**, they start the cycle again.

[0104] As milk enters the system, the suction level decreases (pressure increases). The feedback provided by pressure monitoring via pressure sensor **54** provides input to a feedback loop that adjusts the position of the compression member **38** to maintain the desired vacuum (pressure) within the conduit or flex tubing **32** by compensating for the changes in pressure that occur to changing amounts of milk in the flex tubing **32**. For example, for a relatively larger amount of milk in the tubing, this will require a relatively shorter stroke of the compression member **38** to achieve the latch pressure. This modification can be addressed by either slowing the movements of the compression member **38** to achieve the same timing cycle for pumping, or increasing the cycle frequency due to the less time taken for the shorter strokes of the compression member **38**.

[0105] Use of a system **10** provided with a non-contact pressure sensor **54** would include loading the collection or container assembly **60** into the system **10** (See FIGS. **11**A-E). In a first step (FIG. **11**B), the flange **14** is removed from engagement with the remainder of the system **10**. Attached to the flange is the conduit or flex-tube **32**. The central opening **93** is placed over a central projection of the flange **14** and the flex-tube **32**. Next, the user can pinch the wings **94** under the flex-tube **32** (FIG. **11**C) followed by tucking the collection or container assembly **60** into the flange **14**. The fitment **102** is placed within the collar **82** of the flex-tube **32** (See FIGS. **11**A and **11**E). In certain embodiments, the collection or container assembly **60** can have useful labels, icons or notifications. For example, milk droplet icons can be printed on the collection or container assembly **60** in increasing size to indicate the degree to which the container is filled, and a "this side up" message can be included to aid the user in properly installing collection or container assembly **60**. Also, the container assembly **60** includes a number of surfaces away from storage areas where printing or handwriting can be placed. For example, the wings **94** can be used as a writing or printing surface as can the pull tab **96**. Similar labeling or messages (for example, a "thanks mom" message) can be included on the collar **84** or other portion of the flex-tube **32** to aid in properly orienting the flex-tube with respect to the flange **14**. It is to be recognized that the collection or container assembly can be placed in alternative locations as well. For example, the collection or container assembly can be configured around the nipple of the breast. In this regard, the container assembly itself can form the desired flange or breast contacting structure into its core construction. In one specific approach, the container assembly can also include more surface area facing the breast superior to the nipple than inferior thereto.

[0106] It is contemplated that the door assembly **90** be employed to both provide a continuous contour of the flange **14** for engaging a user's breast as well as to support the engagement of the collection or container assembly **60** with the system **10**. Thus, the door assembly **90** can be configured to pivot with respect to the flange **14**, and employed to close the system **10** as it is snapped over and closes the pump. With this approach, the fitment **102** and container bag **101** are securely sandwiched between the collar **82** of the conduit or flex-tube **32** and the door assembly **90**, with a cylindrical portion of the fitment **102** received within the collar **82**. The collar **82** can also provide rigidity to the flex-tube **32** so that it can be loaded into the flange **14** as well as to provide an annular back-up when the fitment **102** is inserted. Ribs or o-rings can be provided on an interior surface of the flex-tube to facilitate sealing with the fitment **102** and can have a radius of approximately 0.64 mm. In one embodiment, the interior diameter of the flex-tube between the ribs can be approximately 14.6+/−0.17 mm, while the outer diameter of the fitment **102** can be on the order of 14.8+/−0.17 mm so that an interference fit results, with a force of around 1-2.5 lbs.

[0107] As best seen in FIGS. **12** and **13**, the door assembly **90** further includes a pair of spaced and curved guiding arms **105**. The arms **105** are contoured to guide the door assembly **90** as it closes over and about a pair of curved railings **107**. In this way, as the door assembly **90** rotates toward the conduit or flex-tube **32**, a latch **109** of the door assembly **90** first clears and then seats beyond and behind the railings **107** to thereby provide a robust engagement with the flange **14** and bag assembly **60** when it is loaded in the system **10** (See also FIG. **11**). As best seen in FIGS. **8** and **9**, the fitment **102** includes a scalloped portion **110** which functions to facilitate this robust engagement and provide relief of undue stresses being placed upon the bag assembly when securely mounted within the system by resisting kinking. The door assembly can further include one or more ribs **111** (FIG. **15**) that engage and provide directed support to the fitment **102**.

[0108] Turning now to FIGS. **16-18**, there is shown an approach to protecting against pinching by moveable parts of the pump system **10**. One or more magnets **118** can be attached to the flange **14**. A corresponding sensor **119** (such as a hall effect sensor) can be attached to the flex circuit **16** that is mounted to a mounting bracket **120** (See also FIG. **3**). The system **10** can be configured to only permit the motor to be activated when the sensor detects the magnet **118**. In this way, the pumping action of the system and in particular, the compression members will not move until the flange **14** is attached properly to the housing **12**, consequently avoiding any pinching or engagement of such components with the user. In other approaches, mechanical or electronic switches or RFID technology, or optical sensor or sonar technology can be incorporated into the system to provide the desired safeguards, such that the system will not operate unless all components of the system (i.e., flange, tubing and storage) are fully connected.

[0109] In another approach, the system **10** can include firmware that operates to track system pressure on a load cell. Here, the motor paddle can be arranged and controlled by firmware so that it is moved outwardly 0.5 mm or some defined distance and pressure on the load cell is observed to see if the conduit or flex-tube is properly installed. Where the pressure observed is not as expected, such as if there is no pressure, the motors will not be permitted to move inward for pumping. Using a similar technique, proper collection container install can be tested. After the motor extends, the pinch can seal the flex-tube. Once the motor comes back out, a vacuum will only be measured if the bag is properly installed, sealing air from filling the tube on the container side.

[0110] It has also been recognized that fluid ingress protection may be necessary for the pump system. Thus, it is contemplated that various gaskets can be configured within the structure of the system. One particular location for a gasket is the interface between the chassis and housing, and accordingly, a specially designed gasket is configured about

a perimeter of the chassis along a section which is intended to engage the housing. In this regard, a 0.3 mm interference fit is contemplated between the gasket and the housing. Also, gaskets can be configured about moving receiver structure such as that of the load cell and motor to help prevent fluid ingress.

[0111] Once the flange or skin contact member **14** is placed onto the main body/pump housing **34** then pump power can be engaged. Referring now to FIGS. **19-20**, there is shown an enlarged view of the user interface panel which as stated above includes a button membrane **72** and a button membrane housing **73** each supported on the housing **12** and placed in engagement with the flex-circuit that provides the user with system control. Here, the membrane **72** acts as a light pipe. Light emission, intensity and button deflection forces are configured for convenient and effective interaction by the user. Accordingly, pressing the power button **130** functions to start the pump system **10** through its interaction with a switch **131** configured on the flex circuit **16** (See FIG. **18**). It is noted that other switches **132** can further be provided on the flex circuit which line up with other contemplated system control buttons included on the flex membrane **72**. Should the system **10** require external power or the battery charged, access to supporting electronics is gained through the cover jack **65** that is configured in the shell **12** (FIG. **21**).

[0112] As the pump system **10** goes through a power up routine, the controller **52** reads force on the load cell when a load cell is used as the pressure sensor **54**. This is the load measured by the load cell, before the skin contact member **14** has been applied to the breast, so in one approach it is a state in which the pressure in the conduit or flex-tube **32** is atmospheric pressure. The controller **52** then calibrates the system such that the preload force or position or measured load or strain equates to atmospheric pressure. Based upon a neural network or computer learning, load or strain detected at the flex-tube **32** can be converted to pressure readings in the system **10** during operation of the breast pump system **10** upon attachment to the breast.

[0113] The system **10** can calculate the volume of milk pumped into system or alternatively the volume collected in the milk collection container assembly **60**. By knowing the dimensions of the conduit or flex tubing **32** downstream of the compression member **36** when compression member **36** has sealed off tubing portion **32**S, the overall volume capacity of the system **10** downstream of compression member **36** can be calculated. With reference again to FIG. **7**, tracking of the position of the compression member **38** relative to the tube **32** (such as by knowing the driver **46** position at all times, for example), dictates the volume change in the tubing **32**. As the pumping process is carried out, pumping/purging of milk into the milk collection container occurs when the compression member **36** has closed off the small tube portion **32**S at the location of compression. When the compression member **36** has closed off tube portion **32**S, the change in position of compression member **38** that occurs to carry out the purge of milk from the flex tubing **32** and into the milk collection container **60** is used to calculate the change in volume of the tubing **32** downstream of the compression member **36**, which equates with volume of milk that is pushed into the milk collection container **60** bag.

[0114] In particular, under one algorithm, as flow enters the system **10**, it is recognized that the motor must move further and further out to generate latch vacuum. Tracking this movement and the rate of position change of compression or paddle members as they generate latch vacuum is one way of measuring flow. The slope of a line that is associated with tracking paddle locations for latch vacuum, for example, is directly proportional to flow. After a tuning step to correlate this relationship, calculating flow from the slope of this line can be readily accomplished.

[0115] Using another approach, the number of purges can be tracked when the system is full for the purpose of measuring flow. As stated, it can be determined when the system **10** is purging fluid versus purging air since the forces are much higher for purging fluid than purging air. Thus, counting the number of purges that contain fluid, and knowing the volume that is purged for each purge leads to a calculation of flow without requiring significant system tuning or calibration, and avoiding confusing a slow air leak with flow. Leaks can also be detected by employing an algorithm involving closing the pinch compression member, followed by closing the pump compression or paddle member, and then pulling the pump compression member outwardly to create a vacuum. By then holding the pump compression member in this position and verifying the vacuum is maintained, it can be determined if there is a leak in the system **10**.

[0116] In addition to calculating the volume of milk purged with each purge cycle, the system (via controller **52**) can sum the volumes from all purge cycles to calculate the total volume entering the pump or alternatively pushed into the milk collection container **60** during a milk extraction session. This volume can be stored with a unique identifier provided to the milk container so that the system **10** keeps a record of how much milk is stored in each milk collection container **60**. This information can also be time stamped so that the user will know the time and date that milk was collected, regarding each milk collection container. Additional statistics can be calculated, including, but not limited to: average volume per extraction session, total volume extracted for any given day, average milk extraction volume per day, etc. Any and all of this data can be exported to an external computer, either manually, or it may be automatically uploaded to the computer when the computer is within range of the system **10** for wireless communication, or when the computer is connected to the system by wire. Further optionally, any or all of this data can be either manually or automatically uploaded to a cloud service over the Internet, either wirelessly or by wire.

[0117] In one preferred approach, volume that is extracted from a breast is calculated by building a map of motor location versus volume at a specific vacuum such as −60 mmHg, since the same is a reliable and predictably repeatable vacuum level. To build this relationship, various known rates of flow are created within the breast pump, and motor locations at −60 mmHg are identified and stored as data. A script is then employed to extract such data to build this motor versus volume scale. In particular, as shown in FIG. **7**B line M represents motor location versus time and line V represents vacuum versus time. This data is entered into the script to arrive at a graph of volume over time. The script looks at indications of times of purge and tosses out data except a first clean start and finish of a cycle between purges represented by the spike S in FIG. **7**B. An adjustment is made for time such that relative time for the data selected replaces absolute time. The script also functions to filter out data that is too far above or below −60 mmHg. Relative time

is then turned into volume in that motor location becomes volume difference over a relative time span. This data can be plotted as a line (See FIG. **7**C), the area under which represents volume. The output of the script represented as a line having a particular slope is expressed as numbers and as a 6th order equation representing the line. This 6th order equation is incorporated into the code base and is employed during real time to convert measured motor locations during pumping at approximately −60 mmHg into volume. Calculus is thus ultimately employed to arrive at this volume calculation in that motor location versus volume is integrated between two points to determine differences in volume. At certain levels of flow there can be an adjustment factor multiplied by volumes calculated when comparing calculated flows with real world experimentation, in particular to accommodate for flows shortly before and after purging, for example, or for flow above 15 ml/minute. Additionally based upon empirical observations, when the pump is filled with air, a mathematical constant is incorporated into the volume calculations. A determination that the pump is filled with air can be made by observing how hard the motor has to work, and knowing that the motor has to work harder to create vacuum changes when the system is filled with air as opposed to when the system is fluid filled.

[0118] When calculating milk volume pumped from the system **10**, as stated, there is a need to distinguish between any air pumped by the system versus milk pumped from the system, as well as pumping mixtures of milk and air. When initiating a milk pumping/extraction session, there is air in the tubing **32** this initial volume of air needs to be pumped into the milk collection container **60** to prime the pumping system **10**. Again, distinction between pumping air versus pumping milk can be recognized by correlating pressure changes with the amount of movement of compression member **38** needed to establish the pressure changes. For example, when air is in the tubing, a greater change in position, or more overall travel of the compression member **38** is needed to establish the same pressure change than that needed when the tubing **32** is filled with milk. Thus, relatively more motion of the compression member with relatively less pressure change indicates air in the tubing **32**. This difference in pressure may also be detected when the compression member **36** is open (i.e., not closing off tube portion **32**S) and compression member **38** is retracting and this increasing the vacuum pressure.

[0119] When a user has completed the pumping phase of extracting milk from a breast, it is useful and efficient to purge as much milk that remains in the tubing **32** from the tubing **32** and into the milk collection container **60**. Ending of the extraction phase can be performed upon elapse of a predetermined extraction phase time, calculation of a predetermined amount of milk having been pumped, manual cessation of the extraction phase by the operator, or some other predetermined value having been achieved after performing the extraction. The direction of the pumping stroke of compression member **38** is reversed and the compression member **38** is run in the reverse direction to decrease suction within the tubing **32** and optionally create a small positive pressure within the tubing **32** to facilitate removal of the system **10** from the breast. Alternatively, the suction may be decreased to a level where a slight suction remains so that the user still pulls the system **10** of the breast to detach it. Preferably the vacuum is reduced to 0 mmHg, or a slightly positive pressure to automatically detach the system **10** from the breast. The end pressure value where the pressure reduction by reverse pumping is ceased can be in the range of about −20 mmHG (weak vacuum) to a positive 50 mmHg (e.g., the crack pressure of the valve to the container). The compression member **36** does not close off the tubing portion **32**S during this process, rather, tubing portion **32**S remains open. Initiation of this reverse pumping may occur automatically or, alternatively, may be initiated by the user. This process continues until the seal of the system **10** to the breast is broken, which is detected by the controller via sensor **54**. Once exposure of the tubing **32** to atmospheric pressure is detected, the stroke direction of pumping is again reversed thereby pumping the milk in tubing **32** under positive pressure and driving the milk from the tubing **32** into the container **60**. If by chance, the system **10** accidentally or otherwise becomes resealed to the breast during purge pumping, the system **10** can automatically shut down as it senses vacuum pressure being regenerated in the vicinity of the flange or breast/skin contact member **14**.

[0120] The system **10** can be configured to distinguish whether it has been attached to the left breast or the right breast of the user. This can be useful for tracking milk volume output per breast, per session, total daily volume per breast, etc. When using two of the pump systems, the tracking of data for each breast can still be maintained accurately, even when one of the pump systems **10** is attached to the left breast during a current pumping session after having been attached to the right breast during a previous pumping session. In one embodiment, the pumping systems **10** can establish current location (i.e., left or right breast) by receiving a signal from the other pumping system having been attached to the other breast. This established relative left-right locations of the two pumping systems **10**, so that each system **10** can accurately record as to whether milk is being extracted from the right breast or left breast. This identification is automatic, without any user input required and it also relieves the burden on the user to otherwise keep track of which pump system **10** is placed on each breast and to maintain this order with each successive pumping session. Left and right pump labeling is also contemplated such as by placing markings on the system housing or cover jack, for example, near the power connector.

[0121] Various approaches to assessing milk volume can be included in the pump system. Certain approaches are describe in co-pending International Application No. PCT/US15/50340, the entirety of contents of which are incorporated herein by reference. A further approach to assessing expressed milk volume involves placing one or more disposable data collection devices on the mom or child. One specific approach involves creating a boundary on the skin of a breast and employing a fiducial to conveniently measure the change in size of the boundary. This change in size is then correlated to milk production to arrive at a volume of milk expressed or pumped. A crib or bassinet can also include sensors and communication hardware that communicate with the pump system so both assess and management milk consumption and needs, and baby health.

[0122] The system **10** can calculate the pressure during operation in any of the manners described above. The suction (pressure) level can be varied as desired, and by continuously or repeatedly measuring/calculating pressure, the feedback provided by sensor(s) **54** to controller **52** provides a control loop that can be used to adjust the

compression member **38** position and/or speed to vary the suction pressure to a level desired, or maintain a desired suction pressure in real time. Thus, controller **52** can control the positions and speeds of compression members **36**, **38** to achieve any vacuum pressure pumping profile desired, and provide automatic, real time adjustments to maintain a desired vacuum pressure within the system. Also contemplated is responding in real time to maintain flow. This can accomplished independent or in conjunction with monitoring and regulating pressure in real time.

[0123] The controller **52** tracks the position of the compression member **38** relative to the tubing **32**L, such as by keeping track of the driver **46** position or shaft position (interconnecting linkage between driver **46** and compression member **38**), and calculates (or looks up) pressure based upon data received from sensor **54**. The system controller or firmware is programmed with or retains information relating values detected by system sensors with driver positions and speed and system pressure. Thus, changes in position and/or speed of the compression member **38** by controller **52** can be controlled by resulting changes in pressure calculated or looked up, relative to the pressure sought to be achieved. As stated above, by using machine learning or supervised learning regression techniques, the system **10** can be trained to interpret the motor positioning and tubing strain (as well as motor speed or pump settings), while compensating for noise and hysteresis, to arrive at a pressure/vacuum level. More specifically, a neural net system or other mathematical regression can be incorporated into system firmware so that sensor input can be translated to pressure/vacuum levels. Controller **52** can thus control compression member **36** in a similar manner, but control of member **36** is more focused on position control, as the compression member **36** needs to fully close off tube portion **32**S when maintaining latch suction against the breast/nipple. However, the closing off is timed and performed at the determined latch pressure, which is known from the data received from sensor **54**.

[0124] Turning now to FIGS. **22-28**, various aspects of remote control and data collection approaches are presented. In at least one contemplated embodiment, the system **10** can be configured to communicate with a server, a remote computer, smartphone or other device such as through signal, such as by Wi-Fi, BLUETOOTH, BLUETOOTH Low Energy (BTLE), RFID, NFC or the like. In particular, one or more chips can be incorporated into the controller of the pumping system **10** (by hard wire and/or wirelessly, preferably wirelessly) and configured to be in communication with an external computer. The controller and/or external computer communicates with the sensor(s)/chip(s) which indicate(s) when the system is in use, and can track usage. By tracking the times of use and/or number of uses, or even pump cycle counts, for example, the controller, or external computer can alert the user when it is time to change components or to report on usage aspects. In this way, information such as the tracking of extraction date and time, volume extracted, etc. can be recorded and stored with regard to each milk collection container used with the system **10** to extract milk. Thus, the system **10** can register individual milk collection containers, so that the user can readily identify when milk in each container was collected, the volume in each container, etc. The breast pump system can record the volume of milk in any given container during a pumping session. The data recorded can be sent to an external computer and/or over the Internet, either automatically or manually. Thus, user data and trends can be collected, stored and analyzed as they relate to volume (from each breast and in total), as can be the number of sessions on several dimensions (per day, week or month). Data and analytics can thus be provided to a user concerning pumping sessions.

[0125] In one particular approach, at least the session start time, the session end time and total volume of milk extracted from the breast can be stored and tracked. Sessions can be defined as the commencement of latch and can continue up to and through pauses of up to 5 minutes, for example. Thus, a pause of over 5 minutes can be defined as the end of the previous session. A language protocol is generated so that there is a two-way communication between an external device or program and the breast pump. That is, both the pump and external device can create and understand and are responsive to specific messages. Further, live data and historical data can be treated differently, and their data streams maintained separately. Live updates are generated and stored at the pump and are available by the external device to retrieve (for example, up or down button activations or volume updates). Accordingly, such live data can be reflected on and update the screen of the external device. Historical data is stored inside the pump in a stream and the pump can communicate with this stream to extract or act upon the same. An internal pump memory such as a disc within a chip or other internal flash stores, communicates with the pump so that session data is written to an internal history log. At the end of a session, for example, the pump will write the session data to its internal history log and the external device will ask if there is any data and if the pump indicates that there is, then the external device will download this historical data to update its non-live view screens. The external device can also make this same query after an extended time and then download multiple session data, and the query also can be made during a session. In one particular embodiment, as much as 600 sessions of data can be stored.

[0126] In one or more embodiments, the system can additionally or further include structure configured to accomplish or functionality operating as an Active Pause Mode, that allows the system to maintain latch vacuum, while remaining (especially under no/low flow) virtually silent. Such a system stays much quieter than pump mode, but ensures the system does not fall off the breast. It can be employed by the user mom when she needs to interact with others and does not want them to hear the pump, or for some other reason where she might not be ready to remove the device but does not want active pumping either.

[0127] The remote user interface **140** on an external device can take a myriad of forms. The pump system can also be personalized such as by giving one or more pumps a name (FIG. **22**). A user profile can be created for a child and linked to a child's birthdate (FIG. **23**). Other details such as tracking the child's age when use of the system commenced can be gathered so that analytics pertinent to the child's age can be generated. In this way, pump performance can be tracked to the growth of the child. Reminders can be entered into the system (FIG. **24**) so that the user can focus on matters other than breast pumping. Notifications can be keyed to time or volume of milk pumped while both of such criteria as well as battery life can be tracked and reflected on the remote computer (FIGS. **25-28**). Easily understood and convenient graphics are contemplated for expressing status

such as curved hemispherical strips **150** reflecting volumes pumped for each pump system, the same information also being shown in numerical form **152**. Timing countdowns as well as information from one or more previous sessions can also be graphically displayed for effectively communicating with a user. The ability to remotely begin a new session can also be made available to the user.

[0128] The remote user interface **140**, whether provided as an App, on a cell phone, computer or other computing device, can also include specific user control functionality, and various related easy to understand displays (See FIGS. **29-41**). As shown in FIG. **29**, in one or more approaches, the amount of milk pumped is tracked by day, and an option is provided to the user to set a session tracker by day. The amounts pumped are also tracked by breast. A user can set one or more of time and volume of pumping by breast for one or more pumping sessions. For example (FIGS. **30-31**), a volume target can be set by the user by various increments such as 0.1 ounces. This setting can be set and saved, or canceled. As shown in FIG. **32**, the user can then control whether to pump with one or both breasts, and then the system starts tracking pumped volume (see FIG. **33**). As pumping progresses (FIG. **34**), easily readable curved bars reflect the amount of volume being pumped by each breast, the bars becoming thicker as more volume is pumped. The user can adjust suction levels for one or both of the pumps attached to a breast (FIGS. **35-36**) to coordinate pumping or to otherwise pump as desired. After reflecting the changes in suction level, the user can return the system to tracking volumes pumped by breast (FIG. **37**), and an indication of volume remaining to be pumped is also provided. Once the pumping target is met, such as a target volume (FIG. **38**), the user interface will indicate that the session has been completed. Thereafter, an updated set tracker is presented, with an ability to set further pumping schedules (FIG. **39**). The user can then select an option to depict a summary of pumping or a history of pumping (see FIGS. **40** and **41**). The data provided by the user interface can include bar graphs and numerical data showing pumping by day and by breast and session times and number of session. Additionally, circles can be sized to represent relative amounts of pumping by date, and color coated by breast.

[0129] The pump system can also include a power management system that functions to save power. In one aspect, the pump system can be characterized as having multiple modules or threads, each running separate programs. Each thread, such as fifteen to twenty different threads, is designed to operate in a manner to save power. That is, each thread is controlled so that it seeks and finds its own maximum, minimum required power mode.

[0130] The pump system can be further configured so that the power management system includes a power hierarchy including various different levels at which the threads seek to achieve maximum, minimum required power. In one approach, the levels can include one or more of hibernate, standby, standby with LED's and active. Hibernate can be characterized as a deep sleep state and standby can be defined at a level where the system is running the computer chip and running calculations but not external components are being run. Standby with LED's can mean just that the LED's are engaged and active can mean that external components like the motors and sensors are working. The power system can thus function so that a query is sent to each thread asking for the thread's current state and it's minimum required mode. The power system then cycles through each thread and sets the power level at the maximum, minimum power level required so that each thread can properly operate.

[0131] In still yet further embodiments and approaches, the pump system can alternatively or additionally include built-in or computer or App based functionality to de-stress the user's life, empower the user to better take care of the nursing baby's health, maximize the user's mobility and freedom, and support all that is involved in becoming or being a parent. In these regards, pump system structure and functionality can include one or more of keying on pain points, physical conditions, sleep, pain relief, and post partum issues, tracking sleep, sensing and tracking baby vitals and movement, focusing on connected health with the mom as the caregiver, and/or providing education, guidance or instruction on movement and ways to carry a baby, fertility, post baby needs, health of the mom, ultrasound and fertility. The pump system can additionally include App integration with smart bottles, smart scales or the like to facilitate managing overall baby health and nutrition. App updates can additionally be provided about stimulation and letdown, and timing of pumping based upon such information, such as suggestion to begin pumping. System structure and functionality can also involve updating pumping profiles based upon baby age and needs, developing pumping functionality which enhance milk production, enhance efficiency or comfort or better mimic baby. Data can be stored in the cloud for analysis, and additional functionality can be provided to modify speeds and alternated between and among customized modes and profiles. Additional or a myriad of sizes of flanges and bag or container assemblies can be provided to the user as can nighttime pump functionality or programming including automated sessions with starts and stops.

[0132] Inventory management is further functionality that is provided as part of the structure of the pump system. In connection with the same, container assemblies can include structure that is scannable or which otherwise communicates with the inventory management system (eg., via bar codes, RFID chips). Further, operative communication structure can be provided so that the user can transmit data with and between a baby-center platform that stores data thus facilitating an avenue for the effective management of the baby's nutrition, and links can be made to automatically communicate with milk banks and donation centers. Additionally, a caregiver data share system can be included within the functionality and structure of the pump system. Texting is added to other forms and avenues for communicating such important and useful information.

[0133] While the present disclosure has been described with reference to the specific embodiments thereof, it should be understood by those skilled in the art that various changes may be made and equivalents may be substituted without departing from the true spirit and scope of the disclosure. In addition, many modifications may be made to adapt a particular situation, material, composition of matter, process, process step or steps, to the objective, spirit and scope of the present disclosure. All such modifications are intended to be within the scope of the present disclosure.

That which is claimed is:

1. A wearable system to pump fluid from a breast, the system comprising:

a skin contacting structure configured and dimensioned to form a seal with the breast; and

a conduit in fluid communication with the skin contacting structure;

wherein fluid extracted from the breast flows into a sealed collection assembly, or sealed collection assembly having an integral valve system or an airtight collection assembly for storing the fluid pumped from the breast.

2. The system of claim **1**, wherein the wearable system pumps fluid through the conduit against gravity.

3. The system of claim **1**, wherein the wearable system maintains at least a latch suction throughout a pumping cycle.

4. The system of claim **1**, further comprising a controller configured to control operational settings of the wearable system.

5. The system of claim **1**, wherein the sealed collection assembly further having a fitment sized to be received within the conduit.

6. The system of claim **1**, further comprising a controller configured to adjust pumping in real time.

7. The system of claim **1**, further comprising a flange and door configured in the flange, wherein the door engages the collection assembly and maintains an engagement between the collection assembly and the conduit.

8. The system of claim **1**, wherein the conduit includes spherical connectors, one spherical connector being placed into engagement with a compression member configured to facilitate pumping of fluid through the conduit.

9. The system of claim **1**, wherein the conduit includes a bulged portion configured to accommodate system hysteresis.

10. The system of claim **1**, further comprising a flange, a chassis and a housing, wherein the flange, chassis and housing snap together.

11. The system of claim **1**, further comprising structure for impeding fluid ingress into the wearable system.

12. The system of claim **1**, further comprising a controller, the controller controlling a pumping function and modifying pumping to reach targets in real time.

13. The system of claim **1**, further comprising further comprising a flange, a chassis and a housing, wherein the chassis supports internal components of the wearable system.

14. The system of claim **1**, further comprising structure configured to provide pinch protection.

15. The system of claim **1**, further comprising a sensor configured to sense whether the system is properly assembled and a controller adapted to prohibit pumping until the sensor detects that the system is properly assembled.

16. The system of claim **1**, wherein the collection assembly is placed within an interior of the system.

17. The system of claim **1**, wherein the collection assembly includes an umbrella valve.

18. The system of claim **1**, wherein the collection assembly is formed from two sheets bonded together.

19. The system of claim **1**, wherein the collection assembly includes a central opening and a pair of wings extending into the central opening.

20. The system of claim **1**, further comprising a computer configured to remotely control the system, the computer configured to collect, store and analyze user data and trends as related to volume from each breast and in total, and the number of sessions on several dimensions such as per day, week or month.

21. The system of claim **1**, wherein the collection assembly includes a fitment that is integral with the collection assembly.

22. The system of claim **1**, wherein the collection assembly includes a fitment that is attached to the collection assembly.

23. The system of claim **5**, wherein removing the fitment from the collection assembly destroys the collection assembly or fitment.

24. The system of claim **1**, wherein the collection assembly is disposable.

25. The system of claim **1**, wherein the collection assembly is reusable.

26. The system of claim **1**, wherein the system is sealed.

27. The system of claim **1**, wherein the system pumps milk.

28. The system of claim **1**, wherein a valve can be reattached to a second or subsequent collection assembly.

29. The system of claim **1**, wherein the system is not closed.

30. The system of claim **1**, further comprising a flange configured to engage breast tissue, wherein the flange includes a generally rigid flat section.

31. The system of claim **1**, wherein the container assembly is positioned around a nipple of a breast.

32. The system of claim **1**, wherein the skin contacting structure is incorporated into the collection assembly.

33. The system of claim **1**, wherein the container assembly includes more surface area superior to a nipple of a breast than inferior thereto.

34. The system of claim **1**, wherein the conduit is configured to run inferior to superior relative to a nipple of the breast when the user is upright.

35. The system of claim **1**, wherein a tube channel of the conduit includes a section that opens through passive recoil configured next to a section that opens through an assistive support.

36. The system of claim **1**, wherein the collection assembly is at least partially supported and maintained in attachment to the system by friction with the conduit, and partially by a door assembly that encloses and holds the collection assembly in place.

37. The system of claim **1**, wherein the collection assembly includes a one-way valve allowing fluid ingress but preventing backflow.

38. The system of claim **1**, wherein the collection assembly includes a tear-able element to allow removal of fluid.

39. The system of claim **1**, further comprising a safety mechanism configured to prohibit system functioning unless the system is completely assembled for use.

40. The system of claim **1**, wherein an air-tight passageway is provided from a nipple source to the collection assembly.

41. The system of claim **1**, wherein the system is never vented to the atmosphere.

42. The system of claim **1**, wherein suction in the system is reduced only through the flow of fluid therethrough.

43. The system of claim **1**, wherein any sounds generated by the system are reduced by fluid flow through the system.

44. The system of claim **1**, wherein orientation of the system has no effect on functioning on the system.

45. The system of claim **1**, wherein the system defines a breast enhancement system for enlarging the appearance of the user's breast, the system defining a natural breast profile.

46. A method of power management for a breast pump system having a plurality of modules each running individual programs, comprising:

providing a power hierarchy including a plurality of levels;

controlling the modules so that each module seeks and finds its maximum, minimum required power level;

generating a query asking for a current state and a minimum required mode for each module; and

cycling through each module and setting a power level for each module at its maximum, minimum power level required so that each module can properly operate.

47. The method of claim **46**, wherein the power levels include one or more of a hibernate level, a standby level, a standby with LED level and an active level.

48. A container assembly for a breast pump system, comprising;

a body, the body including a neck and a central opening;

a neck portion extending from the body; and

a fitment configured in the neck portion, the fitment including a tail sized and shaped to maintain the neck portion in an open position when the neck is bent.

49. The container assembly of claim **48**, further comprising wings, the wings defining structure for manipulating the container assembly.

50. The container assembly of claim **48**, the fitment further including a one-way valve.

51. The container assembly of claim **48**, further comprising a tab extending from the neck portion.

52. The container assembly of claim **48**, further comprising a tear-able section configured into the neck portion.

53. The container assembly of claim **48**, wherein the tail has a narrow and elongated shape so that fluid can flow around the tail.

54. A method for calculating volumes extracted from a breast by a breast pump, comprising:

tracking and storing motor location versus time;

tracking and storing vacuum versus time; and

determining a relationship between motor location and volume of milk extracted from a breast by the breast pump.

55. The method of claim **54**, comprising mapping motor location versus volume at a specific vacuum.

56. The method of claim **55**, wherein the specific vacuum level is −60 mmHg.

57. The method of claim **54**, further comprising generating known rates of flow within the breast pump at a known specific vacuum within the breast pump and identifying motor location.

58. The method of claim **54**, further comprising observing indications of purging of the breast pump and eliminating data other than that associated with a clean start and a clean finish between purges.

59. The method of claim **54**, further comprising adjusting for relative time to calculate volume.

60. The method of claim **54**, further comprising filtering out data associated with vacuum levels other than a range about a target specific vacuum level.

61. The method of claim **54**, further comprising adjusting volume calculations for flows above a pre-determined level.

62. The method of claim **54**, further comprising incorporating a mathematical constant into volume calculations to take into account when air is in the breast pump.

63. A method of handling data associated with a breast pump system, comprising;

generating and storing live data from operating the breast pump system;

generating and storing historical data from operating the breast pump system; and

maintain live data streams separate from historical data streams.

64. The method of claim **63**, wherein historical data is stored in the breast pump system.

65. The method of claim **63**, wherein live data is employed to update a device external to the breast pump system.

66. The method of claim **63**, further comprising updating an external device with historical data.

67. The method of claim **63**, further comprising storing session data, wherein a session is defined as commencing upon achieving latch and ending when latch ceases or there is a pause in pumping for over five minutes.

* * * * *