US008187227B2

(12) **United States Patent**
Luzbetak et al.

(10) **Patent No.: US 8,187,227 B2**
(45) **Date of Patent: May 29, 2012**

(54) **SELF RETURNING CONTAMINATION BARRIER**

(75) Inventors: **Mark A. Luzbetak**, Kildeer, IL (US); **Thomas A. Sutrina**, Rockford, IL (US); **Erich Pfenniger**, Ebikon (CH); **Patrik Bosshard**, Buonas (CH)

(73) Assignee: **Medela Holding AG**, Baar (CH)

(*) Notice: Subject to any disclaimer, the term of this patent is extended or adjusted under 35 U.S.C. 154(b) by 640 days.

(21) Appl. No.: **11/591,276**

(22) Filed: **Nov. 1, 2006**

(65) **Prior Publication Data**

US 2008/0171970 A1 Jul. 17, 2008

(51) **Int. Cl.**
A61M 37/00 (2006.01)

(52) **U.S. Cl.** ..... **604/141**; 604/892.1; 604/74; 604/75; 604/310; 604/316; 604/323; 261/69.2; 92/48; 92/49; 92/50; 92/96; 92/98 R

(58) **Field of Classification Search** ..... 604/74, 604/75, 141, 310, 316, 323; 261/69.2; 92/48–50, 92/96, 98 R
See application file for complete search history.

(56) **References Cited**

U.S. PATENT DOCUMENTS

301,535	A	7/1884	Tatum	
316,584	A	4/1885	Turner	
684,078	A	10/1901	Martin	
784,780	A	3/1905	Burrell	
1,670,610	A	5/1928	Colby	
2,148,918	A *	2/1939	Weber	417/103
2,273,679	A	2/1942	Westberg	
2,292,401	A *	8/1942	Orre	137/103
2,371,632	A *	3/1945	Lippincott	138/30
2,419,795	A	4/1947	Saunders	
2,687,845	A *	8/1954	Young et al.	92/250
3,083,943	A	4/1963	Stewart et al.	
3,140,085	A *	7/1964	Bourcier	267/64.23
3,465,112	A *	9/1969	Heinlein et al.	200/83 B
3,738,363	A	6/1973	Lunas et al.	
3,782,385	A	1/1974	Loyd	
3,822,703	A	7/1974	Davisson	
3,830,238	A	8/1974	Kurtz et al.	
3,911,920	A	10/1975	Susinn	
3,931,834	A *	1/1976	Caillet	138/30
4,249,481	A	2/1981	Adams	
4,263,912	A	4/1981	Adams	
4,323,067	A	4/1982	Adams	
4,411,603	A	10/1983	Kell	
4,427,470	A *	1/1984	Kolff	156/73.1
4,573,994	A *	3/1986	Fischell et al.	604/891.1

(Continued)

FOREIGN PATENT DOCUMENTS

DE 26 58 322 6/1978

(Continued)

Primary Examiner — Nicholas Lucchesi
Assistant Examiner — Scott Medway
(74) *Attorney, Agent, or Firm* — McDonnel Boehnen Hulbert & Berghoff LLP

(57) **ABSTRACT**

A barrier of a vacuum pump prevents contamination from entering a vacuum pump air line. The barrier separates parts of the pump and is moveable between an initial state and a distended state. The barrier is assembled within the pump with a pre-load. When the vacuum source is applied to the barrier, the barrier achieves a distended state and when the vacuum source is released, the barrier incrementally self returns to an initial state. The geometry and material construction of the barrier, along with the pre-load, assists in returning the barrier on its own to the initial state from the distended state.

8 Claims, 8 Drawing Sheets

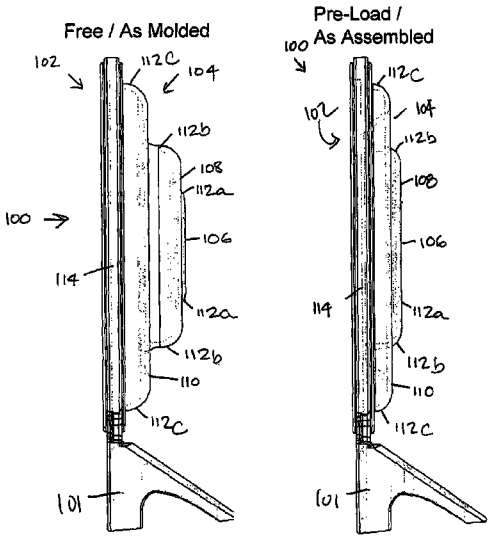

U.S. PATENT DOCUMENTS

4,583,970	A	4/1986	Kirchner	
4,634,430	A	1/1987	Polaschegg	
4,649,863	A	3/1987	Hoefelmayr et al.	
4,673,388	A	6/1987	Schlensog et al.	
4,759,385	A *	7/1988	Hudson, Jr.	137/512.15
4,775,366	A	10/1988	Rosenblatt	
4,799,922	A	1/1989	Beer et al.	
4,799,924	A	1/1989	Rosenblatt	
4,799,925	A	1/1989	Rosenblatt	
4,820,273	A *	4/1989	Reinicke	604/141
4,864,918	A *	9/1989	Martin	92/103 SD
4,883,464	A	11/1989	Morifuki	
4,886,494	A	12/1989	Morifuji	
4,915,017	A	4/1990	Perlov	
4,961,726	A *	10/1990	Richter	604/74
5,009,638	A	4/1991	Reidwig et al.	
5,071,403	A	12/1991	Larsson	
5,089,020	A *	2/1992	Koppert	623/3.21
5,123,332	A *	6/1992	Thayer et al.	92/103 M
5,145,336	A *	9/1992	Becker et al.	417/413.1
5,149,413	A *	9/1992	Maget	204/258
5,242,406	A *	9/1993	Gross et al.	604/132
5,349,896	A *	9/1994	Delaney et al.	92/98 R
5,358,476	A	10/1994	Wilson	
5,749,850	A	5/1998	Williams et al.	
5,785,508	A *	7/1998	Bolt	417/560
5,814,019	A *	9/1998	Steinbach et al.	604/131
5,817,001	A *	10/1998	Leschinsky et al.	600/18
5,941,847	A	8/1999	Huber et al.	
6,110,140	A *	8/2000	Silver	604/74
6,378,739	B1 *	4/2002	Maas et al.	222/383.1
6,390,338	B1 *	5/2002	Baudin	222/321.2
6,461,324	B1	10/2002	Schlensog	
6,499,729	B1 *	12/2002	Walterbusch	267/140.13
6,530,900	B1 *	3/2003	Daily et al.	604/132
D484,236	S *	12/2003	Renz et al.	D24/109
6,663,587	B2	12/2003	Silver et al.	
6,729,494	B2	5/2004	Portmann et al.	
6,746,637	B1 *	6/2004	Huss et al.	264/135
6,749,582	B2	6/2004	Britto et al.	
6,776,591	B1 *	8/2004	Rinninger et al.	417/571
6,863,648	B2 *	3/2005	Williams et al.	600/18
6,994,030	B2 *	2/2006	Perut et al.	102/202.5
7,029,454	B2	4/2006	Watanabe	
7,066,874	B2 *	6/2006	Riebman et al.	600/16
2003/0050623	A1 *	3/2003	Lord et al.	604/891.1
2003/0139702	A1	7/2003	Renz et al.	
2003/0149398	A1 *	8/2003	Renz et al.	604/74
2004/0087898	A1	5/2004	Weniger	
2004/0158199	A1 *	8/2004	McKendry et al.	604/74
2005/0154348	A1	7/2005	Lantz et al.	
2005/0154349	A1	7/2005	Renz et al.	
2006/0111664	A1	5/2006	Samson et al.	

FOREIGN PATENT DOCUMENTS

DE	87 14 995.8	2/1988
EP	0 466 462 A1	1/1992
FR	1 067 421	6/1954
GB	185521	9/1922
GB	2 082 920	3/1982
JP	2002 035111	2/2002
JP	2004 000486	1/2004
JP	2006 015004	1/2006
WO	WO 2004 058330	7/2004

* cited by examiner

FIG. 1A

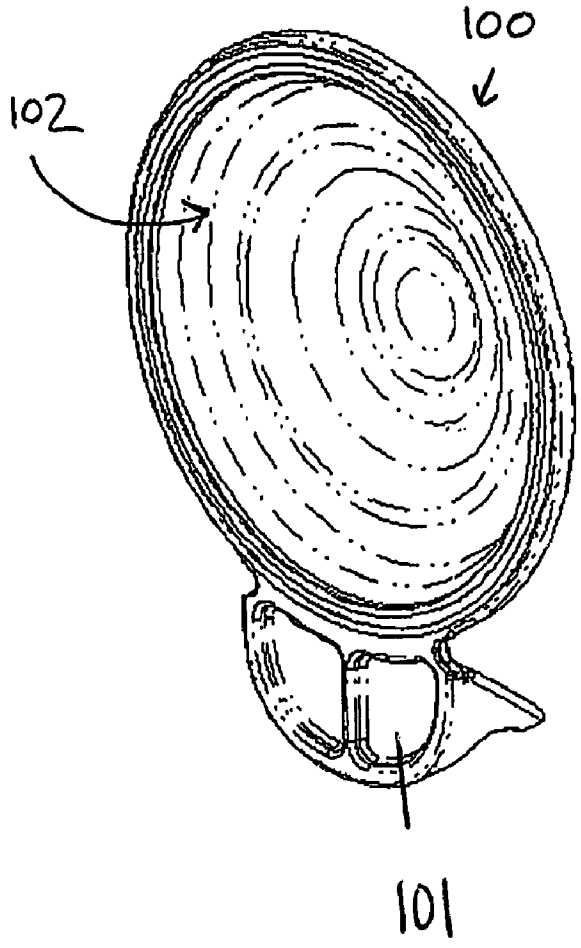

FIG. 1B

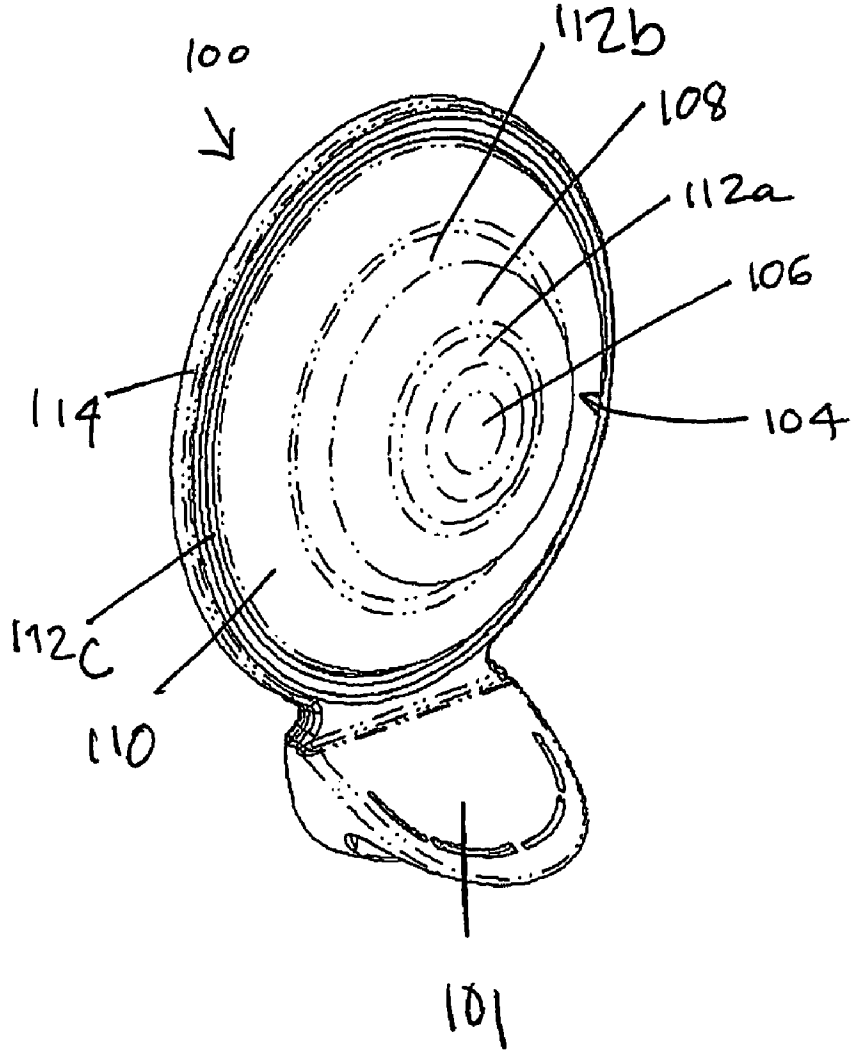

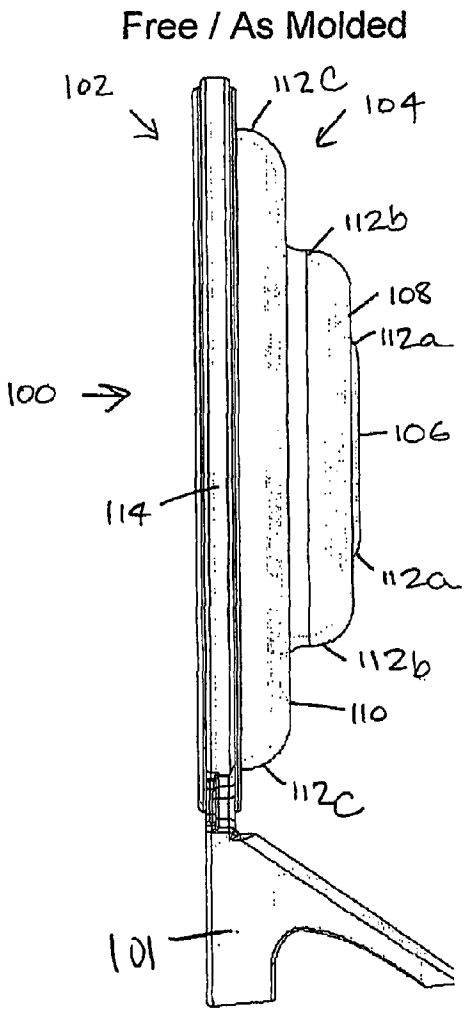

FIG. 2

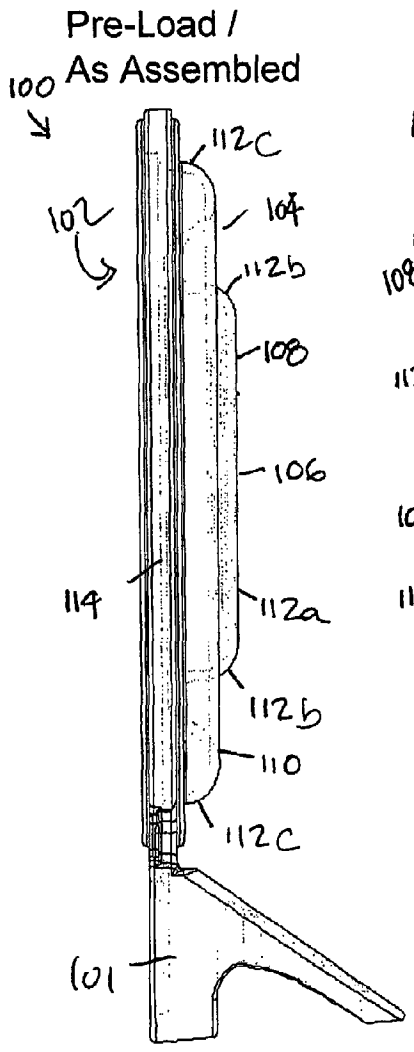

FIG. 6A

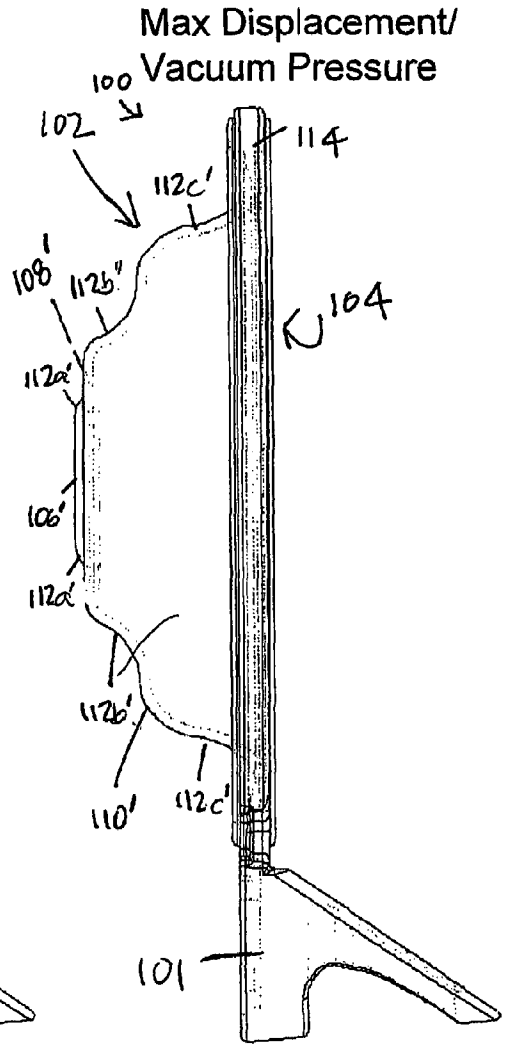

FIG. 6B

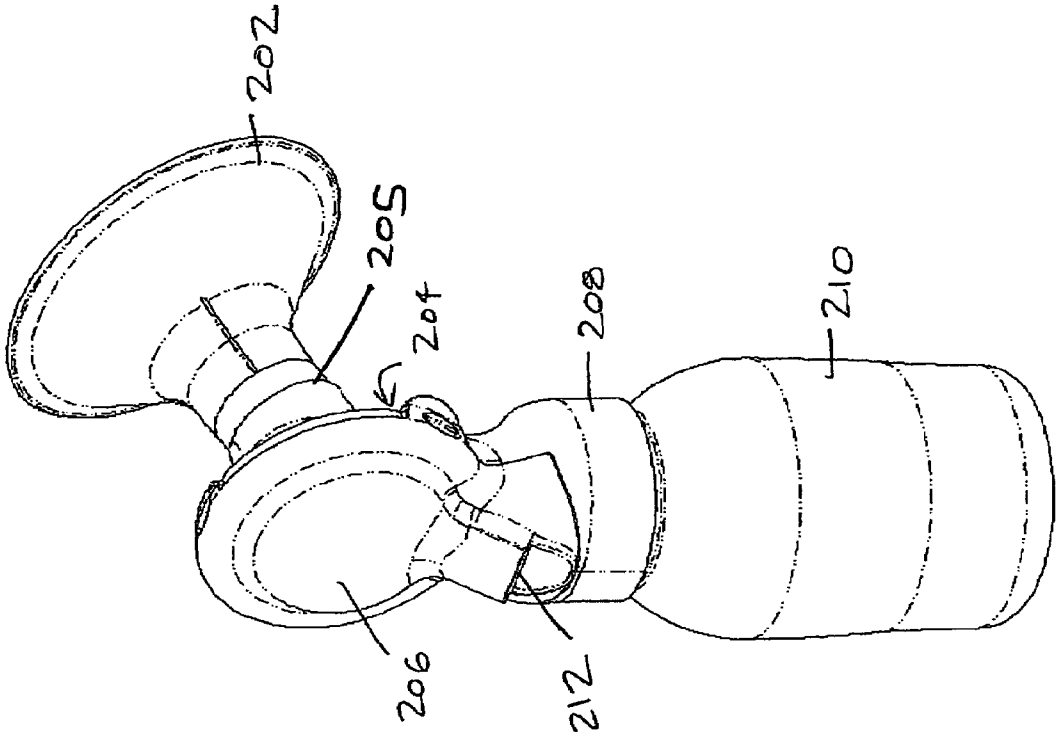

FIG. 3B

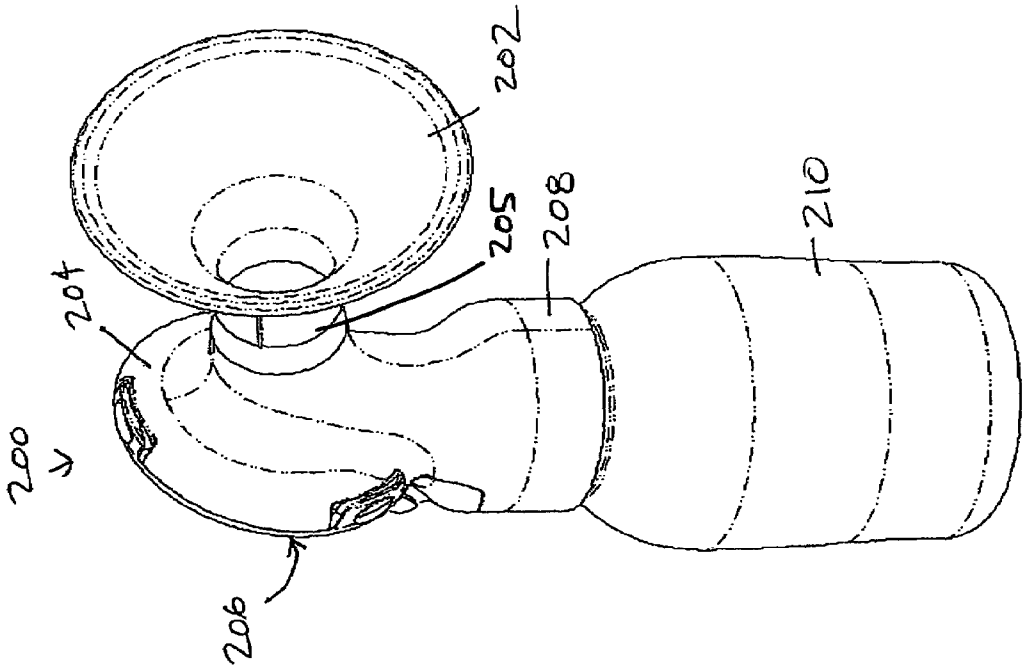

FIG. 3A

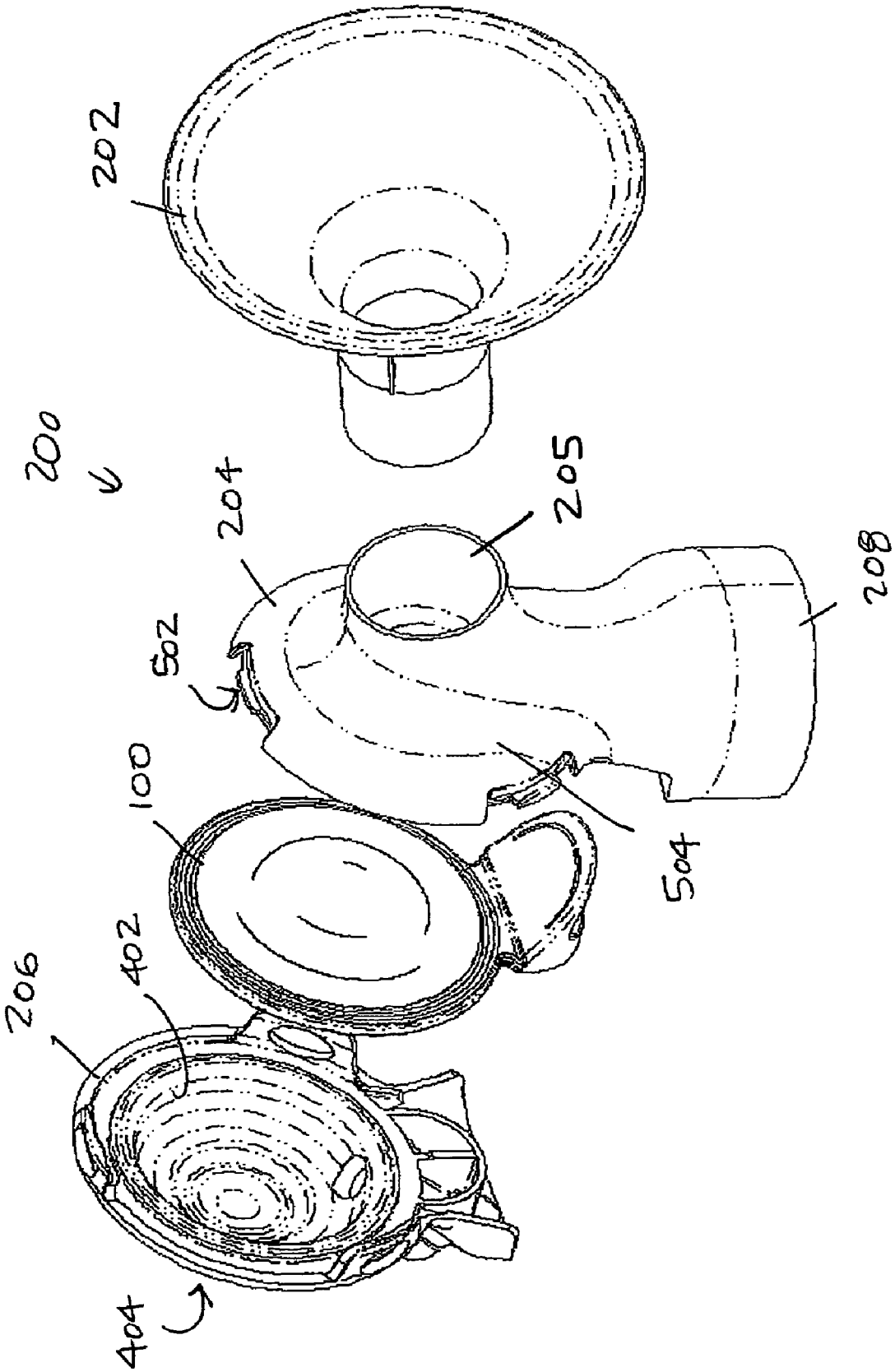

FIG. 4

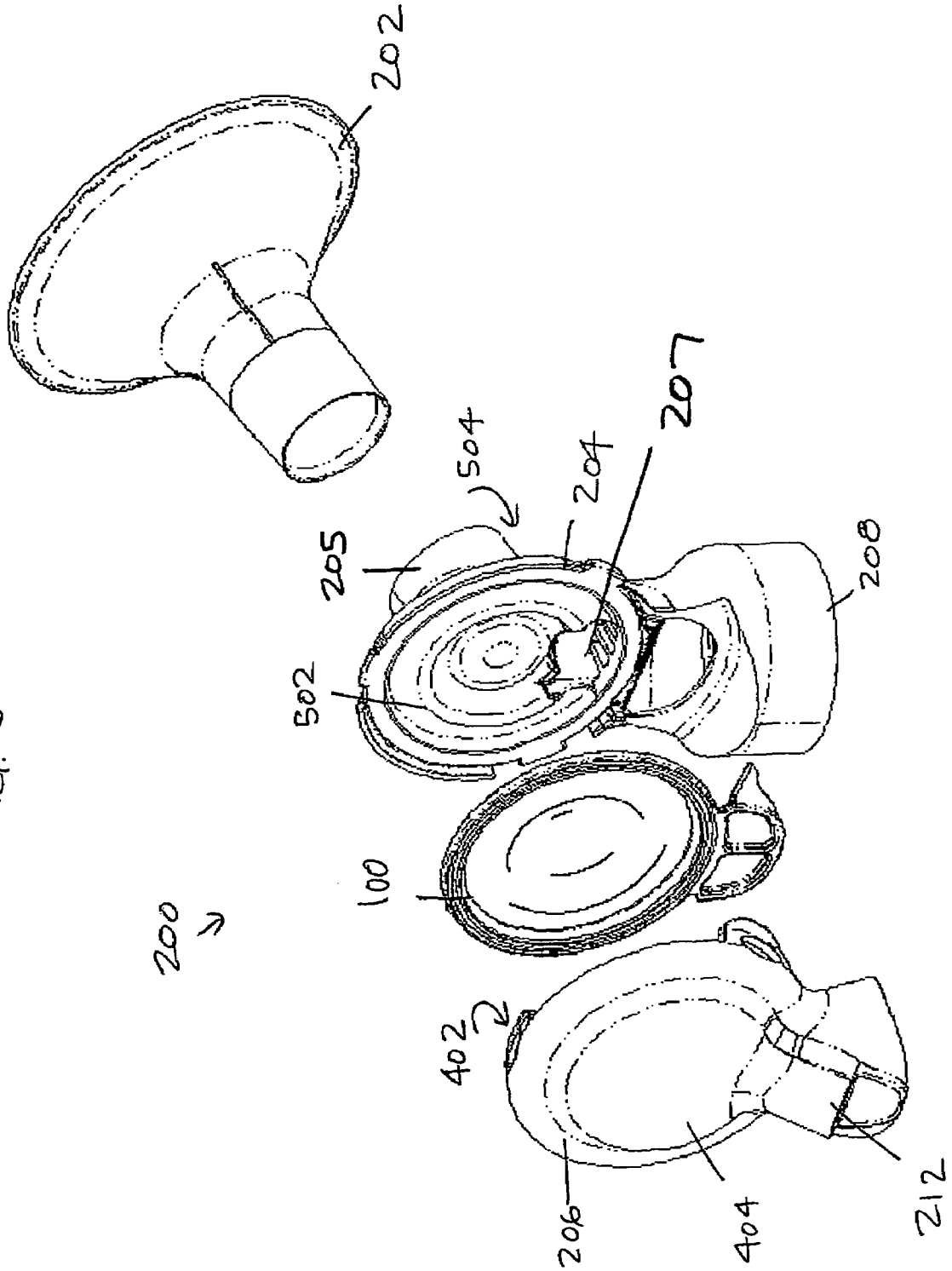

FIG. 5

FIG. 7B

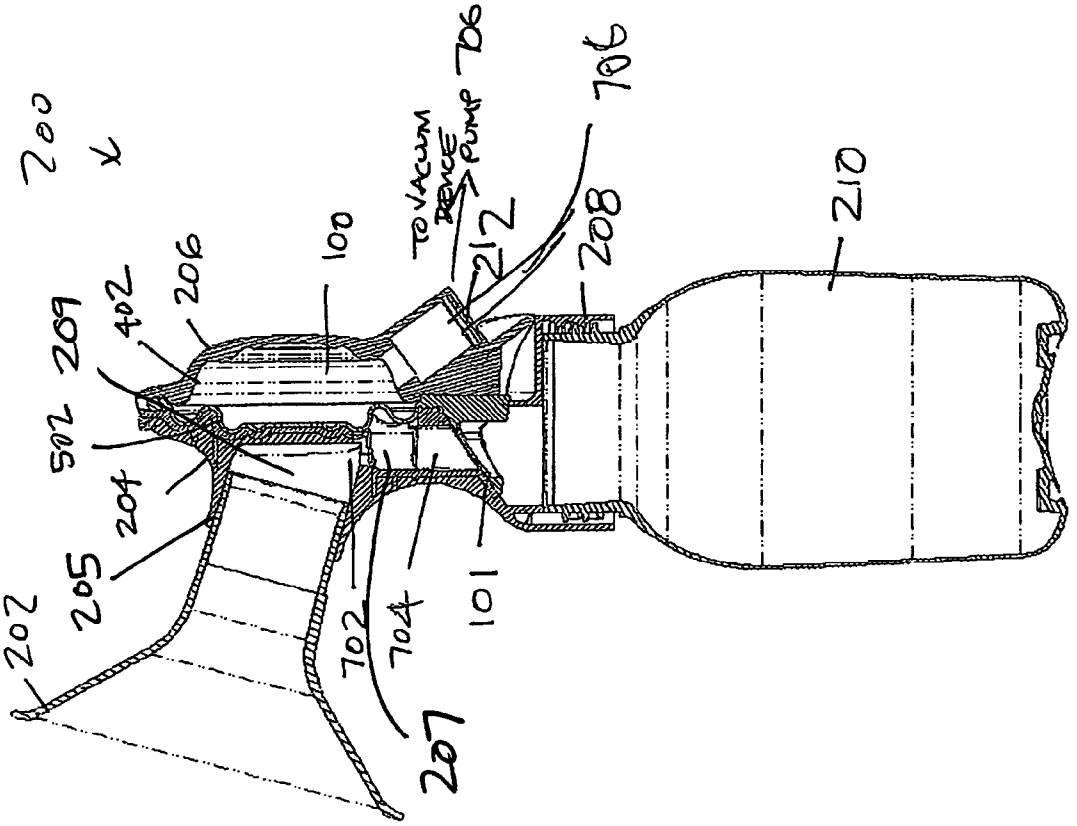
200
202
205
204
502
209
402
206
100
TO VACUUM PUMP
706
212
208
706
210
101
704
702
207

FIG. 7A

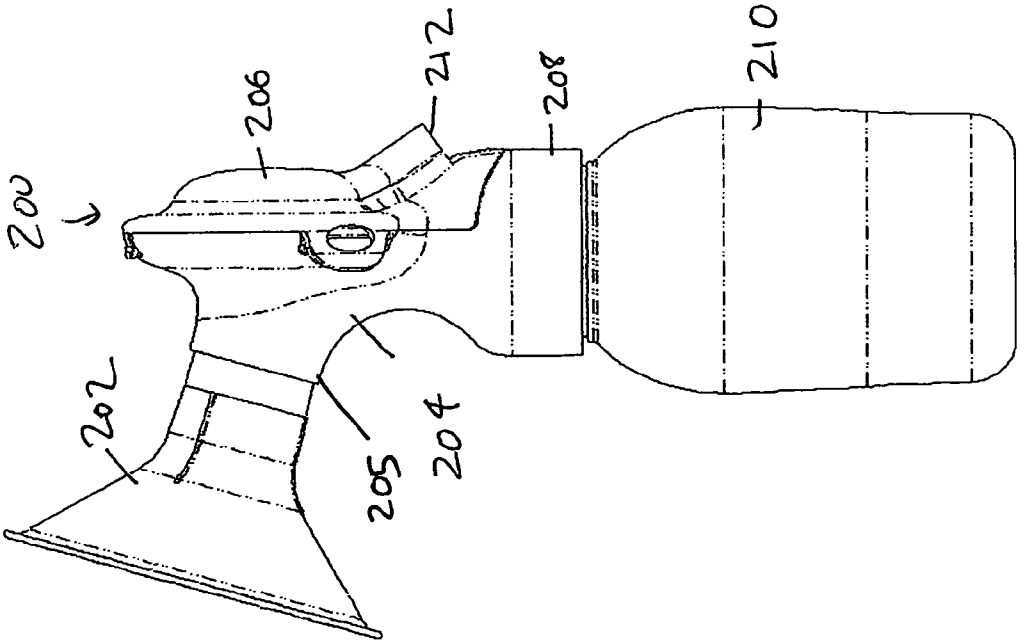
200
202
205
204
206
212
208
210

FIG. 8

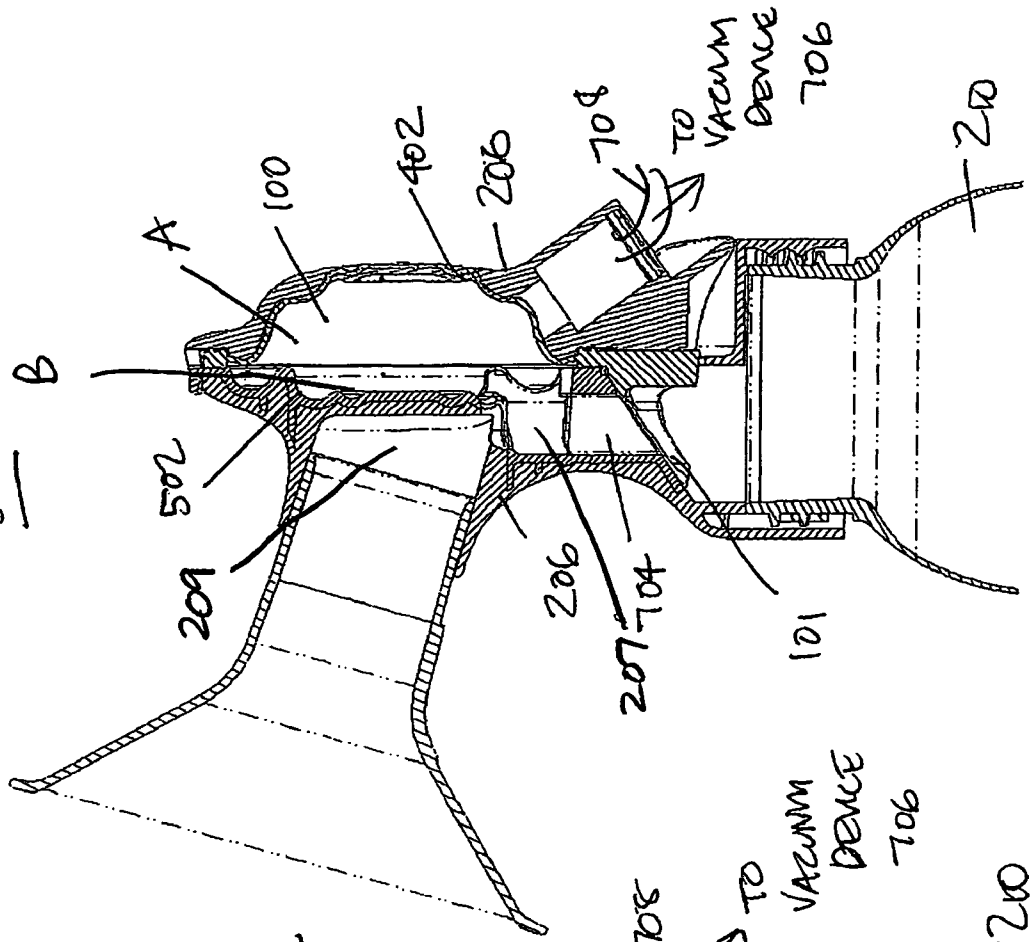
800
A
B
100
402
206
708
TO VACUUM DEVICE 706
210
502
209
206
207
704
101

FIG. 9

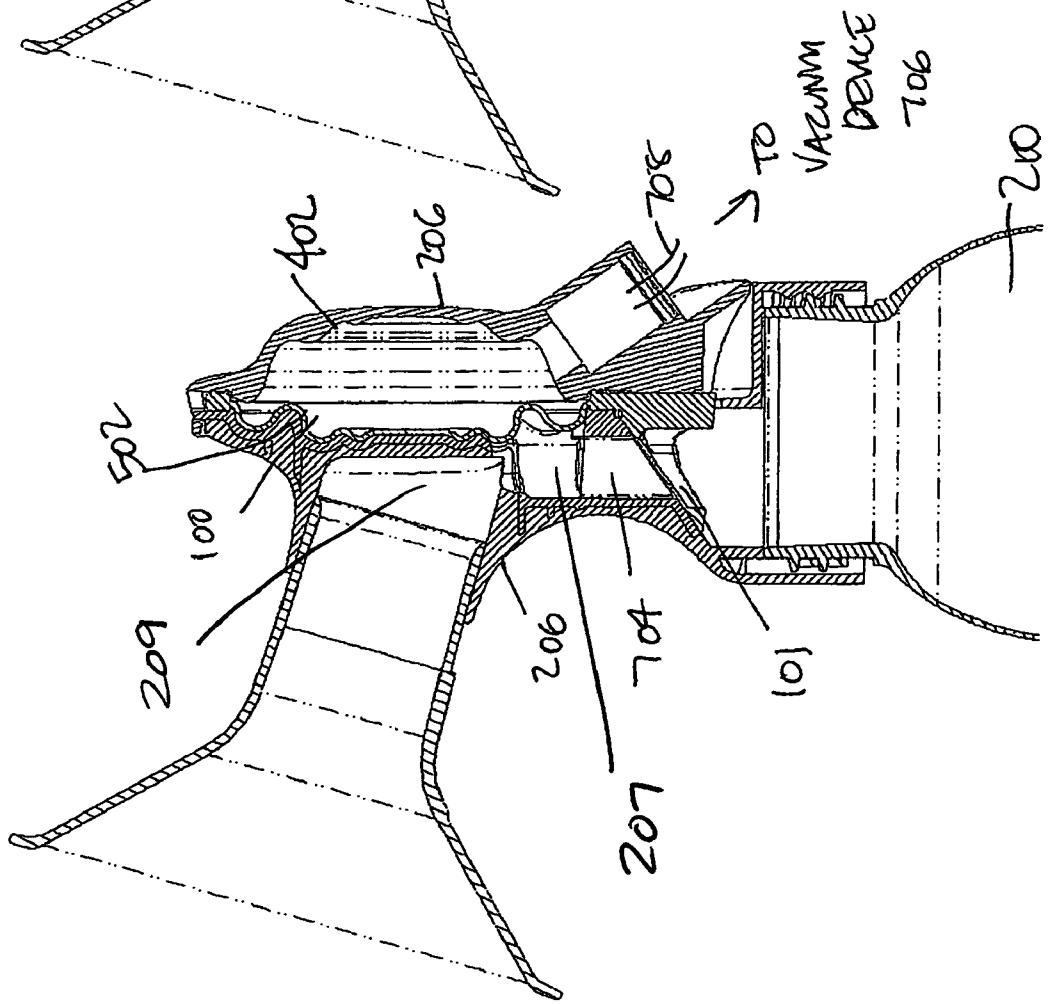
402
206
708
TO VACUUM DEVICE 706
210
502
100
209
206
704
101
207

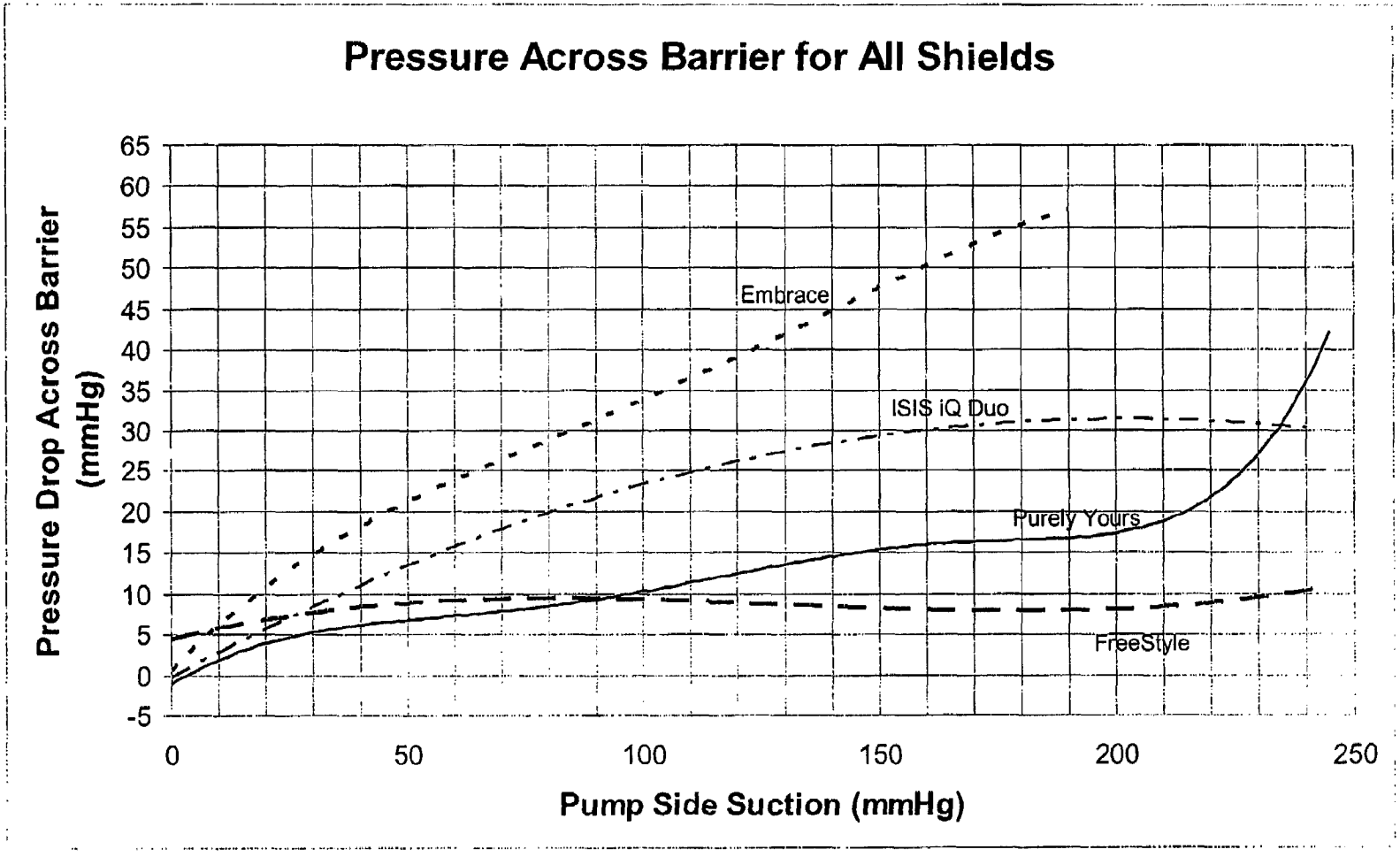
Pressure Across Barrier for All Shields
Pressure Drop Across Barrier (mmHg)
65
60
55
50
45
40
35
30
25
20
15
10
5
0
-5
0
50
100
150
200
250
Pump Side Suction (mmHg)
Embrace
ISIS iQ Duo
Purely Yours
FreeStyle

FIG. 10

SELF RETURNING CONTAMINATION BARRIER

FIELD OF THE INVENTION

The present invention relates generally to contamination barriers for pumps, and more particularly in one aspect to a breastpump assembly including an improved barrier to prevent milk from entering and possibly contaminating a pumping mechanism for the breastpump.

BACKGROUND OF THE INVENTION

Breastpumps are well known, and generally comprise a hood or shield that fits over the breast, a vacuum pump connected to the hood for generating an intermittent vacuum (or negative pressure) within the breastshield, and a receptacle for expressed milk. Negative pressure is pressure below atmospheric pressure. The intermittent suction action of the vacuum pump serves to pull on the breast and nipple and thereby express milk. The expressed milk typically flows from the hood, through a conduit structure and into a collection container, such as a baby bottle, for storage and later use.

Breastpumps can be manually or electrically operated. With manually operated pumps, the pumping action is done by reciprocating a piston or lever by hand, or compressing a flexible bulb, as shown in Medela's U.S. Publication No. 2004/0039330. With electrically operated pumps, the pumping action generated by a motor driven pump and typically conveyed by an air hose, or air line, that connects to the breastshield assembly.

In most instances, the pressure applied at the breast is a negative pressure (suction). That negative pressure is typically applied to the interior of the breastshield in a singular fashion, that is, without any kind of differential vacuum application over the breastshield as a whole. This has ordinarily been done through a cyclic pattern, e.g., intermittent suction. Breastpumps of this kind, which only pull and release suction, are known as simple pumps.

There are also breastpumps that apply a vacuum pressure and a positive pressure, typically applied to the interior of the breastshield, known as complex pumps. Typically, a vacuum pump that generates a positive pressure, (pressure above atmospheric pressure,) assists in forcing the expressed milk through a valve and into the collection container. A breastpump of the foregoing type is shown in U.S. Pat. No. 4,857,051 to Larsson, the disclosure of which is incorporated herein by reference for further details of a breastpump assembly in general.

Positive pressure opens the valve, often used with breastpumps, to assist in movement of the breast milk through the conduit structure and into the bottle. During pumping, the expelled milk will ultimately be separated from the air drawn back and forth in the air hose, and to and from the breastshield. Some breastpumps use gravity and geometry, such as a splashguard, to separate the milk and air (air being the working fluid), but these breastpumps are often difficult to clean, and the orientation of the breastshield in use may be thereby limited. Other breastpumps use a filter, for example a hydrophobic filter, to prevent milk from entering the air hose and/or pump. That filter can become saturated, shutting down pumping; it must also be cleaned and even periodically replaced. The objective of these efforts is to isolate parts of the breastpump from milk or other liquids/bacteriological material that would constitute a contaminant, or foul the works (such as milk finding its way to the pump mechanism). In institutional settings, for another example, it is desirable to

have a pump that can be transferred between mothers, yet the pump mechanism remains isolated from one mother to the next.

Some conventional electric breastpumps also use a moveable, sometimes collapsible, membrane or barrier, that separates the breastshield (including valve) from the pumping mechanism. During operation, two pressures are realized: a first pressure on the vacuum side of the membrane, or pump vacuum, and a second pressure on the breastshield side of the membrane, or breastshield vacuum. The vacuum pump communicates a negative pressure to the membrane via the air hose, such that the first pressure is greater than the second pressure, or in similar terms, the pump vacuum is greater than the breastshield vacuum. This differential vacuum causes the membrane to collapse or move. A problem with some conventional breastpumps of this type is that the membrane may not return to an initial state or position, i.e., it may end up locking or buckling.

This type of breastpump generally requires a positive pressure from the breastshield side of the membrane to push the membrane past a lock or buckle point in order to return the membrane to the non-collapsed state during a breastpump cycle. A breastpump of the foregoing type is shown in U.S. Pat. No. 5,941,847 to Huber. A typical issue with these types of pumps is that leakages, evaporation, expulsion of milk and breast extension hysteresis do not ensure that the membrane returns fully to its initial non-collapsed state without the assistance of a positive pressure.

Some conventional manual breastpumps also include a collapsible or movable membrane that has a significant energy loss in "transferring" vacuum from one side to the other. The mechanical coefficient across the barrier membrane needs dramatic improvement.

Accordingly, a breastpump that reduces or eliminates contamination in the upstream pump air line and pump by isolating the pressure source from the expressed milk is desired to protect the user and prevent damage to the pump mechanism. A much more energy efficient pump system that uses a movable membrane/barrier for vacuum communication is also highly desirable.

SUMMARY OF THE INVENTION

The present invention, in perhaps one of its broadest expressions, comprises a barrier for a pump or a pumping system, that separates parts of the pump while transferring a pressure change across the barrier. When a pressure, as from a vacuum source, is applied to the barrier, the barrier achieves a distended state and when the vacuum is released, as by a return to atmospheric pressure, the barrier has a natural bias that returns it to an initial "pre-loaded" state. This advantageously can actually yield a slight positive pressure from the system and the breastshield side or the downstream side of the barrier (relative to the upstream vacuum source). "Bias" is used herein to describe the pre-set tendency of the barrier to try and return to this initial state.

Although embodiments of the present invention discussed herein are directed to breastpump systems, it is contemplated that various other applications for a self-returning barrier exist, for example, in a general sense to similar pump systems. This applies to other attributes of the invention as well.

Another object of the present invention is to provide a self-returning barrier such that a source of positive pressure from the pump is not required to return the barrier to its initial state from a distended state during a breastpump cycle, and further that the mechanical transfer of vacuum across the barrier is highly efficient. The force required to distend the

barrier of the present invention is determined by material construction, breastshield size, breast size, and the vacuum level of the pump; but in any of these systems, displacement of the barrier to a distended state requires that the pump vacuum is greater than the breastshield vacuum, i.e., there is energy lost in the mechanical transfer of vacuum from one side of the barrier to the other. The present invention achieves a highly efficient mechanical transfer.

The geometry of the inventive barrier acts as a spring in a preferred form. The barrier geometry maintains a low spring rate. A sufficient spring force designed into the barrier returns the barrier to the initial state, and further can assist in the expulsion of milk through a valve and into a collection container.

Another object of the present invention is to provide a barrier with a pre-loaded residual force when assembled. That is, the barrier is compressed along a central axis in the assembled state. The barrier is thus pre-loaded, i.e., biased when in this assembled state.

Yet another object is to provide a self-returning barrier that returns to an initial state from a distended state in a brief time frame, i.e., 150 milliseconds or less, without assistance from the pump to thereby further, minimize energy expenditure on the breastpump system.

Another object of the present invention is to provide a barrier to isolate parts of the pump, as from contaminants or the like that could otherwise pass.

Yet another aspect of the present invention is to provide a self-returning barrier that collapses uniformly as well as returns to an initial state uniformly. The barrier of the present invention thereby eliminates the need to apply force to move through non-uniform states, such as in a lock or buckle condition of the prior art. The barrier of the present invention includes a corrugated geometry to prevent it from locking up or buckling. In one form this geometry comprises one or more undulations in the barrier that are generally concentric on a convex surface.

During collapse or achievement of a distended state, the barrier of the present invention in a preferred form never locks or buckles, even during circumstances when the pump vacuum remains less than the breastshield vacuum or when the pump vacuum is equal to the breastshield vacuum. Likewise, the barrier of the present invention never locks or buckles during return from a distended state to an initial state, even during the circumstances when the vacuum pressure is greater than the breastshield vacuum or the vacuums are equal.

Another aspect of the present invention is to provide a self-returning barrier that works with manually operated as well as electrically operated breastpumps. Furthermore, a self-returning barrier is provided that may function with complex electrical pumps providing a negative pressure and a positive pressure, and also with a simple pump providing only negative pressure (and a vent to atmosphere).

In particular, the barrier of the present invention does not require assistance from the vacuum pump, such as the positive force of air, for the barrier to return to its initial state during a breastpump cycle. The geometric and material construction of the barrier itself returns the barrier to its initial state after a suction phase.

In a broad embodiment, the present invention is a movable barrier for separating parts of a pump, as to prevent contamination that includes an initial state wherein the barrier is assembled as to possess a pre-load. When a vacuum source is applied to the barrier, the barrier achieves a distended state, and when the vacuum source is released, the barrier incrementally self-returns to an initial state.

The present invention, with application to a breastpump assembly, has a breastshield, a conduit structure and a collection container (bottle). A resilient barrier is assembled in a pre-loaded condition in a housing, which is located in an air pressure line, typically a vacuum line. When a vacuum is applied, the barrier achieves a distended state, and when the vacuum is released, the barrier utilizes the pre-load as a spring action to assist in transforming to its initial pre-load state.

In another aspect, a breastpump assembly has a contamination barrier located in a vacuum line between a vacuum pump and a breastshield. A housing has a breastshield side and a vacuum side, also referred to herein as vacuum pump side, separated and isolated from one another by the barrier. The barrier is assembled within the housing in an initial pre-loaded state such that said barrier has a bias toward the breastshield side when no vacuum is applied. When vacuum is applied, the barrier achieves a distended state, and when the vacuum is released, the barrier returns to the initial state.

In one embodiment, the barrier has a generally convex shape at least in part as presented by a convex barrier side, and is assembled within the foregoing housing so that the bias presses the convex barrier side against an internal breastshield side sidewall of the housing in the initial state. The convex barrier side has at least one undulation formed in its surface generally concentric with the center of the convexity of the barrier. In a most preferred form, the internal breastshield side sidewall has a shape that generally conforms to that of the convex barrier side, such that the barrier and the breastshield side sidewall substantially mate when in facial engagement (in the initial pre-load state or condition).

In the foregoing embodiment, the barrier becomes inverted under vacuum, and forms another generally convex shape when distended under vacuum, at least in part, as presented by the now inside-out barrier side in the distended state. A vacuum side sidewall has in this most preferred form, a shape that generally conforms to that of the distended barrier side, such that the barrier and the vacuum side sidewall substantially mate when in facial engagement.

In another aspect of the present invention, the barrier has a plurality of generally concentric undulations designed to provide bending moments for the barrier tending to return from a distended state to an initial state. This is contrasted with stretching of a barrier of the prior art, rather than bending.

It is yet another advantage of the present invention to provide a breastpump assembly which isolates parts of the pump in a vacuum line from contamination, such as between a breastshield and a vacuum source in communication with the breastshield via the vacuum line. The vacuum line is in communication with a housing that has a breastshield side and vacuum side. A resilient barrier having a form with a first surface that is, at least in part, generally domelike with an unassembled dome height as measured from a base of the dome to the first surface. The resilient barrier is assembled in the housing in a manner to separate and thereby isolate the breastshield housing side and vacuum housing side in an initial state with a pre-loaded condition for the barrier. The pre-loaded condition of the barrier has an assembled dome height that is less than the unassembled dome height.

Furthermore, the vacuum realized on the breastshield side follows a generally one to one relationship with the vacuum applied on the vacuum side, after an initial level of vacuum is realized on the vacuum pump side to overcome the pre-load condition. The initial level of vacuum to overcome the pre-load condition can be about 4 to 15 mmHg (negative) in one form of the invention. This yields a highly efficient vacuum transfer across the barrier. The foregoing embodiment can further include a milk conduit structure which conveys milk

from the breastshield to a container via a catch chamber and a one-way valve between the catch chamber and the container. The barrier, upon returning to an initial state with a predetermined minimum amount of milk in the catch chamber, generates an increased pressure in the catch chamber relative to the container so as to open the valve and release milk to travel into the container.

These, together with other objects and advantages will be further understood in the details of the construction and operation of the invention as more fully hereinafter described, reference being had to the accompanying drawings, forming a part hereof, wherein like numerals refer to like parts throughout, in which:

BRIEF DESCRIPTION OF THE DRAWINGS

FIG. **1**A is a perspective view of a contamination barrier in a free state according to the present invention;

FIG. **1**B is a perspective view of the barrier of FIG. **1**A from the other side;

FIG. **2** is a side view of the contamination barrier of FIG. **1**;

FIG. **3**A is a front side perspective view of a breastpump assembly according to the present invention;

FIG. **3**B is the breastpump of FIG. **3**A from the back side;

FIG. **4** is an exploded perspective view from the front side of the breastpump assembly of FIGS. **3**A and **3**B according to the present invention (without the bottle);

FIG. **5** is an exploded perspective view from the back side of the breastpump assembly of FIG. **4**;

FIG. **6**A is a side view of the contamination barrier of FIG. **2** in a pre-loaded state according to the present invention;

FIG. **6**B is a side view similar to that of FIG. **6**A with the barrier distended;

FIG. **7**A is a side sectional view of the breastpump assembly of FIGS. **3**A and **3**B;

FIG. **7**B is a sectional view of the breastpump assembly of FIG. **7**A.

FIG. **8** is an enlarged sectional view similar to that of FIG. **7**B in one phase;

FIG. **9** is a sectional view similar to that of FIG. **8** in another phase; and

FIG. **10** is a comparison chart of performance (curves) of various membranes.

DETAILED DESCRIPTION OF AN EMBODIMENT OF THE INVENTION

Although the embodiments of the present invention described herein are directed to breastpump assembly systems, which is the particular environment that the invention finds its origin, it is contemplated that the present invention has various other applications, such as any pump system that requires a barrier to prevent contamination, or that may benefit from a movable membrane that is very efficient in transmitting pressure changes from a volume (or working fluid) on one side to a volume (or working fluid) on the other side.

The barrier of the present invention works with simple manually operated breastpumps that may provide only suction (and a vent to atmosphere), as well as more complex pumps, such as motorized pumps, and pumps providing both suction and a positive pressure. Thus, while described in particular respects with a source of vacuum, the pressure source could also be a positive pressure moving the barrier.

FIGS. **1**A and **1**B illustrate a self-returning contamination barrier **100** in a "free" state according to the present invention; that is, unassembled, and as it may be molded. The barrier includes an inner surface **102**, and outer surface **104**. As shown, the outer surface **104** includes three concentric circular panels **106**, **108**, **110**, although any number of panels and any concentric shape are contemplated. The panels **106**, **108**, **110** are amalgamated, or joined, via sidewalls **112**. Sidewall **112***a* joins center panel **106** to intermediate panel **108**. Sidewall **112***b* joins intermediate panel **108** to exterior panel **110**. Exterior panel **110** is amalgamated (joined) with a rim **114** via sidewall **112***c*. As shown, and discussed in more detail hereafter, a valve **101** formed integral with barrier **100**, but it is contemplated that the valve **101** could be separate and apart from the barrier **100**.

The self-returning contamination barrier **100** is made of a resilient material, such as an elastomer, or any plastic and rubber combination that permits the barrier to function as a spring, described more fully below. The preferred embodiment is constructed of liquid injection molded silicone (LIMS), such as LIM **6050** that available from General Electric (GE).

The barrier **100** is assembled with a breastpump protection to eliminate contamination in the pump air line. FIGS. **3**A and **3**B illustrate a breastpump assembly **200**. The assembly **200** includes a detachable breastshield **202**. The breastshield **202** engages with a breast to form a seal to ensure suction to the breast, while maintaining comfortability. The front housing **204**, also referred to herein as first housing, front side, or breastshield side, includes an interface or base part **205** and bottle collar **208**. Breastshield **202** is detachably connected to the interface **205** of front housing **204** (although it could be made integral therewith). A collection container or bottle **210** is attached to the collar **208** of the front housing **204**. The rear housing **206**, also referred to herein as second housing, back side, or vacuum side, includes a port **212** to connect to an electrically operated pump, otherwise referred to as the vacuum source.

FIG. **4** and FIG. **5** illustrate an exploded view of the breastpump assembly **200** according to the present invention. The rear housing **206** includes an interior rearwall surface **402** and an exterior surface **404**. The front housing **204** includes an interior frontwall surface **502**, and an exterior surface **504**. As assembled, the barrier **100** is positioned between the interior rearwall surface **402** of the rear housing **206** and the interior frontwall surface **502** of the front housing **204**.

The frontwall surface **502** most preferably has a shape that generally matches the outer surface **104** of the barrier **100** when it is in facial engagement in the initial state. The interior rearwall surface **402** most preferably has a shape that generally matches the inner surface **102** of the barrier **100** in a distended (inverted) state, described more fully below. The rim **114** forms a seal between the interior surface **502** of the front housing part **204** and the interior surface **402** of the rear housing part **206**.

Once assembled within the housing, the barrier **100** separates and isolates the breastshield side of the housing **204** and the vacuum side of the housing **206**. The barrier **100** is assembled in a pre-loaded initial state, also referred to herein as a first or initial position, or state, and maintains a concave shape as viewed from the vacuum side or a convex shape as viewed form the breastshield side, between the housing parts **204**, **206**, as shown in FIG. **6**A. In this first position, the barrier **100** is biased toward the breastshield side of the housing **204**.

As can be seen from FIG. **6**A, the center panel **106** and sidewall **112***a* are substantially aligned with intermediate panel **108** in the pre-loaded state, i.e., when assembled. In addition, sidewalls **112***b*, **112***c* in a compressed configuration in the pre-loaded state, in comparison to the free state (FIG. **2**). Looking at this another way, the barrier **100** has a dome-

like shape, with a central axis. In the free state of FIG. **2**, the height of the dome, as taken along this axis from rim **114** to the front surface of the convex side (panel **106**), is h_1. In the pre-load state of FIG. **6**A, the dome is compressed to a height of h_2, where h_2 is less than h_1. The pre-loaded state assists in the functionality (spring action) of the barrier **100** during operation, described more fully below.

With reference to FIGS. **7**A and **7**B, the breastshield **202** connects to the interface (collar or shield base) **205** of the front housing **204**. When milk is expressed from the breast of a nursing mother, the milk thereby flows from the breastshield **202** through a liquid conduit **702** portion to a collecting or catch chamber **704**, and then to the collection container **210** (here, a bottle). At the outlet of the collection chamber **704** there is provided a valve **101** which closes the collection chamber **704**, leading to bottle **210**. Valve **101** in this instance is shown integrated with barrier **100**, but again, it is contemplated that the valve **101** could be separate and apart from the barrier **100**. This system is not dependent on this type of valve, in any event.

When a vacuum or negative pressure is applied to the breastshield **202** from a well known type of suction device **706**, which may be manually operated or motor driven, the valve **101** closes the collection chamber **704**, and a negative pressure is applied to the interior of the breastshield **202**. Milk is collected within the collection chamber **704**. When the negative pressure is released, the valve **101** opens to pass milk expressed into the breastshield **202** and thence to the collection chamber **704**, to flow into the bottle **210**. As noted, the valve mechanism may be of many types, for example a duckbill type.

The vacuum or suction device **706** here is a house-current driven vacuum pump using a tube, or air line **708** to convey the vacuum, although it is contemplated that the vacuum device **706** may be a manually operated piston pump, or a battery operated diaphragm pump. The invention herein is, however, not limited to any particular kind of vacuum device.

The vacuum source **706** connects via air line tube **708** to a port **212** formed on the rear housing **206**. The port **212** extends through surface **402** and communicates with the interior of the rear housing **206**. There is an interior surface **502** of the front housing **204**, against which the barrier **100** is initially positioned, as shown in FIG. **7**B. The breastshield side of the housing **204** has an aperture **207** that extends into the conduit structure communicating with interior space **209** within the connecting collar **208**. The vacuum in the rear housing **206** is thereby communicated to the breastshield **202** by movement of the barrier away from the front wall surface **502**, which in turn draws air through aperture **207** from space **209** and within the breastshield **202**. The above describes a vacuum conduit structure which conveys the vacuum from the source **706** to the breastshield **202**.

As stated, just before the vacuum source is applied, the barrier **100** is in facial engagement with the interior frontwall surface **502** of the front housing **204**. The frontwall surface **502** has a shape that generally matches the outer surface **104** of the barrier **100** in this initial state. This matching engagement, which could also be less exact for substantially matching engagement, provides the smallest amount of "dead" volume on the breastshield side. It should be appreciated that the invention provides a very efficient vacuum transfer mechanism, which will use less energy and therefore extend the useful life of a battery-operated pump.

The breastpump assembly **200** of the present invention operates through a breastpump cycle of suction, air line release, and milk release. FIGS. **8** and **9** illustrate the breastpump in the first phase, or suction phase. During operation, two pressures are realized on each side (breastshield side and vacuum side) of the barrier **100**: a first pressure A on the vacuum side of the barrier **100**, otherwise referred to herein as pump vacuum, and a second pressure B on the breastshield side of the barrier **100**, otherwise referred to herein as breastshield vacuum. The pump **706** communicates a negative pressure to the barrier **100** via the air line **708** such that the first pressure A is at least initially greater (more negative) than the second pressure B, yielding what is known as a differential vacuum. This differential vacuum ultimately causes the barrier **100** to reach a distended state. The pump **706** draws a negative pressure (relative to atmosphere), which pulls the barrier **100** back into a second position, or distended state (see FIG. **8**). The now inverted barrier **100** is in facial engagement with interior rearwall surface **402** of the rear housing **206** in the full distended state. The rearwall surface **402** has a shape that generally matches the inner surface **102** of the barrier **100** in this distended state.

As shown in FIG. **6**B, when a vacuum is applied to the inner surface **102** of the barrier **100**, the barrier **100** essentially turns inside out, such that an initial convex shape (FIGS. **2** and **6**A) is transformed to an inverted convex shape (FIG. **6**B). The center panel **106'** is displaced from intermediate panel **108'** via sidewall **112***a*', while the intermediate panel **108'** is displaced from the exterior panel **110'** via **112***b*' and the exterior panel **110'** is displaced from the rim **114** via sidewall **112***c*'. Sidewalls **112***a*', **112***b*', **112***c*' are substantially lengthened in the distended state **900** in comparison to both the free state (FIG. **2**) and the initial state (FIG. **6**A).

As the barrier transforms to and from a distended state and an initial state, the exact position of barrier between the front housing **204** and rear housing **206** is determined by the difference between the first pressure A on the vacuum side of the barrier and the second pressure B on the breastshield side, i.e., differential vacuum. In addition to a first pressure and second pressure, the barrier **100** defines a first volume on the vacuum side and a second volume on the breastshield side. It should be noted that as the barrier moves, the first volume and second volume (in addition to the first pressure and second pressure) change respectively.

In the collection chamber release phase, vacuum is released, typically by release to atmospheric pressure into the air line **708**. The breastpump enters the air line release phase where energy stored (pre-load) in the barrier **100** causes the barrier **100** to return to its initial state (FIGS. **6**A and **9**). The second pressure B returns to atmospheric level if no milk has been added to the collection chamber **704**. If no milk, or air from leakage around the breast, has been added to the collection chamber **704**, the valve **101** does not open and the breastpump cycle repeats until milk is collected in the collection chamber **704**. If milk is present, however, the air volume in the breastshield side will have been reduced by the milk volume. The barrier **100** pre-load then creates an overpressure (relative to the container) within the collection chamber **704**, opening the valve **101**. That is, as the barrier **100** transforms from the distended state, the differential vacuum reverses wherein the first pressure A decreases and the second pressure B increases. With a pressure equal or greater than atmospheric pressure within the collection chamber **704**, milk in the pathway can flow through valve **101** from the collection chamber **704** into the collection container **210**, i.e., milk release phase. The barrier **100** utilizes its pre-load during displacement to pneumatically apply a pressure to the milk thus opening the valve **101** and releasing the milk into the collection container **210**. As the milk is released, the pressure applied by the barrier **100** decreases to the pre-load represented by the initial state of the barrier. After the milk is

released, the valve **101** closes. The vacuum system then repeats the phases again through this cycle, beginning with the suction phase.

It will be noted that the invention may be adapted so that the barrier does not return completely to the initial state. This might be in a situation where minimum vacuum level is to be maintained in the breastshield during pumping. The tendency of the barrier nonetheless causes it to move toward that initial state, if not achieving it.

FIG. **10** is a comparison chart of performance (curves) of various contamination barriers. As indicated in the graph of FIG. **10**, pressure drop across the barrier, or differential pressure, is indicated along the y-axis (in millimeters of mercury) and vacuum side suction (in millimeters of mercury) is along the x-axis. The graph indicates values based on one pumping cycle drawn up to −250 mmHg. The pressure drop is the difference between the pressure on the breastshield side of the barrier and the pressure on the pump side of the barrier.

The FREESTYLE curve was made with an embodiment of the invention. As indicated, it had a pre-load of 4 mmHg, i.e., it required that amount of vacuum before the barrier began to move. PURELY YOURS, ISIS IQ DUO and EMBRACE are commercial products. They are assembled without a pre-load. As can by seen in FIG. **10**, FREESTYLE, which incorporates the advantages of the present invention, had the most consistent pressure drop across the barrier for the entire vacuum range. This illustrates an excellent mechanical transfer, and a reduced amount of energy required on the breastpump system, when a barrier contemplated by the present invention is implemented. The FREESTYLE barrier is most efficient in that the energy loss is minimal once the pre-load is overcome.

It is understood that there may be many shapes, sizes, and configurations of the barrier that will fall within the scope of the invention. The use of the terms dome, concave and convex does not limit the invention to a round barrier. Any shape, e.g., non-round barrier is contemplated with material thickness and shape varying with respect to distance and angle from the center of the barrier to achieve the spring action discussed herein. It is seen that the objects set forth above, among those made apparent from the preceding description, are efficiently attained and, since certain changes may be made in the above constructions without departing from the spirit and scope of the invention, it is intended that all matter contained in the above description or shown in the accompanying drawings shall be interpreted as illustrative and not in a limiting sense. It is also to be understood that the following claims are intended to cover all of the generic as well as specific features of the invention herein described, and all statements of the scope of the invention that, as a matter of language, might be said to fall therebetween.

While the present invention has been described with reference to a particular embodiment, those skilled in the art will recognize that many changes may be made thereto without departing from the scope of the present invention. Each of these embodiments and variants thereof is contemplated as falling with the scope of the claimed invention, as set forth in the following claims.

What is claimed is:

1. A movable barrier device for separating parts of a breastpump, as to prevent contamination and convey a pressure change from one side of the barrier to the other, comprising:

a barrier including a barrier circumference, a central axis, and a formed shape of convexity in an unassembled condition, wherein in an assembled condition said barrier is mounted within and separates parts of a housing and is compressed along said central axis through engagement with a part of said housing such that said barrier cannot reach said formed shape of convexity of said unassembled condition;

a distended state to which said barrier moves in response to an air pressure change applied to one side of said barrier; and

an initial state to which said barrier has a preset bias to return to, wherein said barrier achieves said initial state in response to the release of said pressure applied to said barrier;

wherein in said initial state said barrier is in said assembled condition and is compressed along said central axis;

wherein in said distended state, at least a part of said barrier passes along said central axis such that said barrier is in a position inverted from said formed shape of convexity.

2. A barrier device for a pumping system of a breastpump, comprising:

a resilient membrane having a center and at least one concentric undulation around said center, said resilient membrane being mounted along a barrier circumference to a chamber of a housing to divide said chamber into isolated parts, wherein a vacuum source applied to said resilient membrane in a first phase moves said barrier into a distended state; and an atmospheric pressure applied to said resilient membrane in a second phase returns said barrier to an initial state; and

wherein said barrier has a formed shape of convexity in an unassembled condition, and when mounted within said housing said barrier cannot reach said formed shape of convexity when said barrier is in said initial state, such that said barrier is pressed against a frontwall of said housing in said initial state;

wherein said barrier has a central axis between opposite sides of said circumference and at least part of said barrier passes along said central axis in said distended state.

3. The barrier of claim **1**, wherein said distended state is responsive to a differential vacuum.

4. The barrier of claim **3**, wherein said barrier has a bias toward said initial state and after said bias is overcome said differential vacuum remains about the same as said barrier moves to said distended state.

5. A barrier device and pumping element for a reciprocating pumping system, comprising:

a housing,

a barrier member mounted for repeated reciprocating movement within said housing, separating said housing into two chambers;

a first state for said barrier wherein said barrier includes a pre-load biasing at least part of said barrier out of a plane defined by a circumference of said barrier;

wherein a pressure source applied to said barrier in said first state causes said barrier to achieve a second state that is displaced from said first state, and said barrier returns towards said first state in part by said pre-load and wherein said barrier has a formed shape of convexity in an unassembled condition, and when mounted within said housing said barrier cannot reach said formed shape of convexity in said first state, such that said barrier is pressed against a frontwall of said housing in said first state and at least a portion of said barrier is inverted from said first state when in said second state.

6. The barrier of claim **5**, wherein said pre-load is determined in part by said barrier being made of a resilient material in combination with the shape of said barrier.

7. A pumping mechanism for a breastpump, comprising:

a barrier housing having an interior frontwall spaced apart from an interior rearwall and defining an interior space therebetween, said rearwall having a port;

a barrier mounted within and dividing said interior space into isolated compartments, said barrier having a generally convex shape;

said interior frontwall surface having a convex shape that generally matches said barrier convex shape in a first state, wherein said interior frontwall surface is in facial engagement with said barrier and presses said barrier against said convexity in said first state;

a source of pressure applied from said port to said interior space to repeatedly move said barrier in a reciprocating action;

said interior rearwall surface having a shape that generally matches said barrier shape in a second state, wherein said barrier is repeatedly moved by application of a pressure from said pressure source from said first state to said second state, and said barrier becomes deformed in said second state, wherein said interior rearwall surface is in facial engagement with said deformed barrier in said second state; and

said barrier being made of a resilient material which in combination with said barrier shape causes said barrier to return from said second state to said first state without assistance upon the release of said pressure;

wherein said barrier has a formed shape of convexity in an unassembled condition, and when mounted within said housing said barrier cannot reach said formed shape of convexity in said first state, such that said barrier is pressed against said housing frontwall in said first state.

8. The barrier of claim 1, wherein said barrier is pressed against a frontwall of said housing in said initial state.

* * * * *