US007641629B2

(12) United States Patent
Yuen

(10) Patent No.: US 7,641,629 B2
(45) Date of Patent: Jan. 5, 2010

(54) **BREAST PUMP**

(75) Inventor: **Yat Keung William Yuen**, Hong Kong (CN)

(73) Assignee: **Sea Profit (Hong Kong) Limited**, Kowloon (HK)

(*) Notice: Subject to any disclaimer, the term of this patent is extended or adjusted under 35 U.S.C. 154(b) by 911 days.

(21) Appl. No.: **10/821,924**

(22) Filed: **Apr. 12, 2004**

(65) **Prior Publication Data**

US 2005/0228342 A1 Oct. 13, 2005

(51) **Int. Cl.**
A61M 1/06 (2006.01)

(52) **U.S. Cl.** **604/74**; 604/73; 604/315; 604/346

(58) **Field of Classification Search** 604/73–76, 604/35, 36, 132, 133, 346; 450/36–38
See application file for complete search history.

(56) **References Cited**

U.S. PATENT DOCUMENTS

2,444,257	A	6/1948	Jenner	
3,551,069	A	12/1970	Morris, Jr.	
4,673,388	A *	6/1987	Schlensog et al.	604/74
4,883,464	A *	11/1989	Morifuki	604/74
4,886,494	A *	12/1989	Morifuji	604/74
5,542,921	A	8/1996	Meyers et al.	
5,947,923	A *	9/1999	Uehara et al.	604/74
6,045,529	A	4/2000	Nuesch	
6,090,065	A	7/2000	Giles	
6,355,012	B1	3/2002	Nuesch	
6,547,756	B1 *	4/2003	Greter et al.	604/74
6,673,036	B1	1/2004	Britto	
2005/0101908	A1 *	5/2005	Atkin et al.	604/74

FOREIGN PATENT DOCUMENTS

CN	2127873	Y	3/1993
CN	2141286	Y	9/1993
CN	2172649	Y	7/1994
CN	2523431	Y	12/2002
CN	2580971	Y	10/2003

* cited by examiner

Primary Examiner—Nicholas D Lucchesi
Assistant Examiner—Quynh-Nhu H Vu
(74) *Attorney, Agent, or Firm*—Buchanan Ingersoll & Rooney PC

(57) **ABSTRACT**

An electric breast pump is disclosed as including a hood to be fitted over a breast of a user, a chamber in fluid communication with the hood member via a one-way valve, a pump motor operatively associated with a pump diaphragm movable to draw air from the hood into the chamber via the valve, in which the chamber has an opening and a lid which is operatively associated with the motor, in which the lid is movable between a first position to close the opening and a second position in which the opening is open, and in which the lid is at the first position when the motor is in operation and is at the second position when the motor is not in operation. The breast pump also includes sensors for detecting the passing of milk, and a microcontroller for calculating the rate of flow of milk on the basis of data received from the sensors.

54 Claims, 13 Drawing Sheets

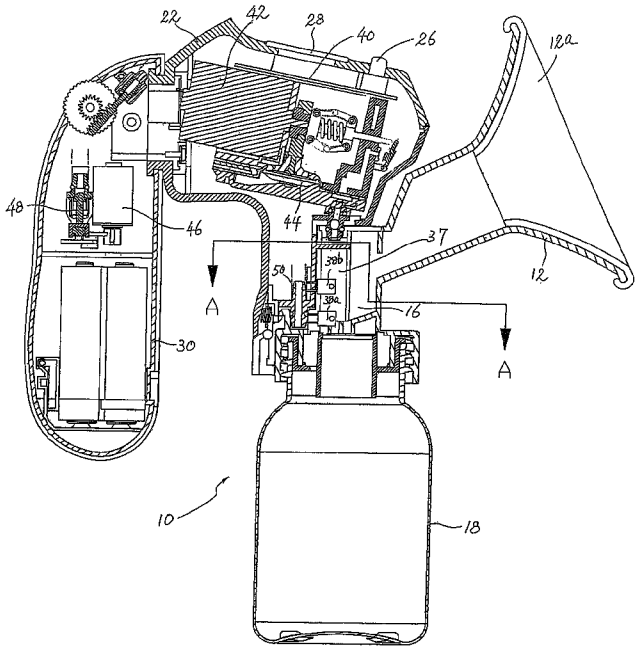

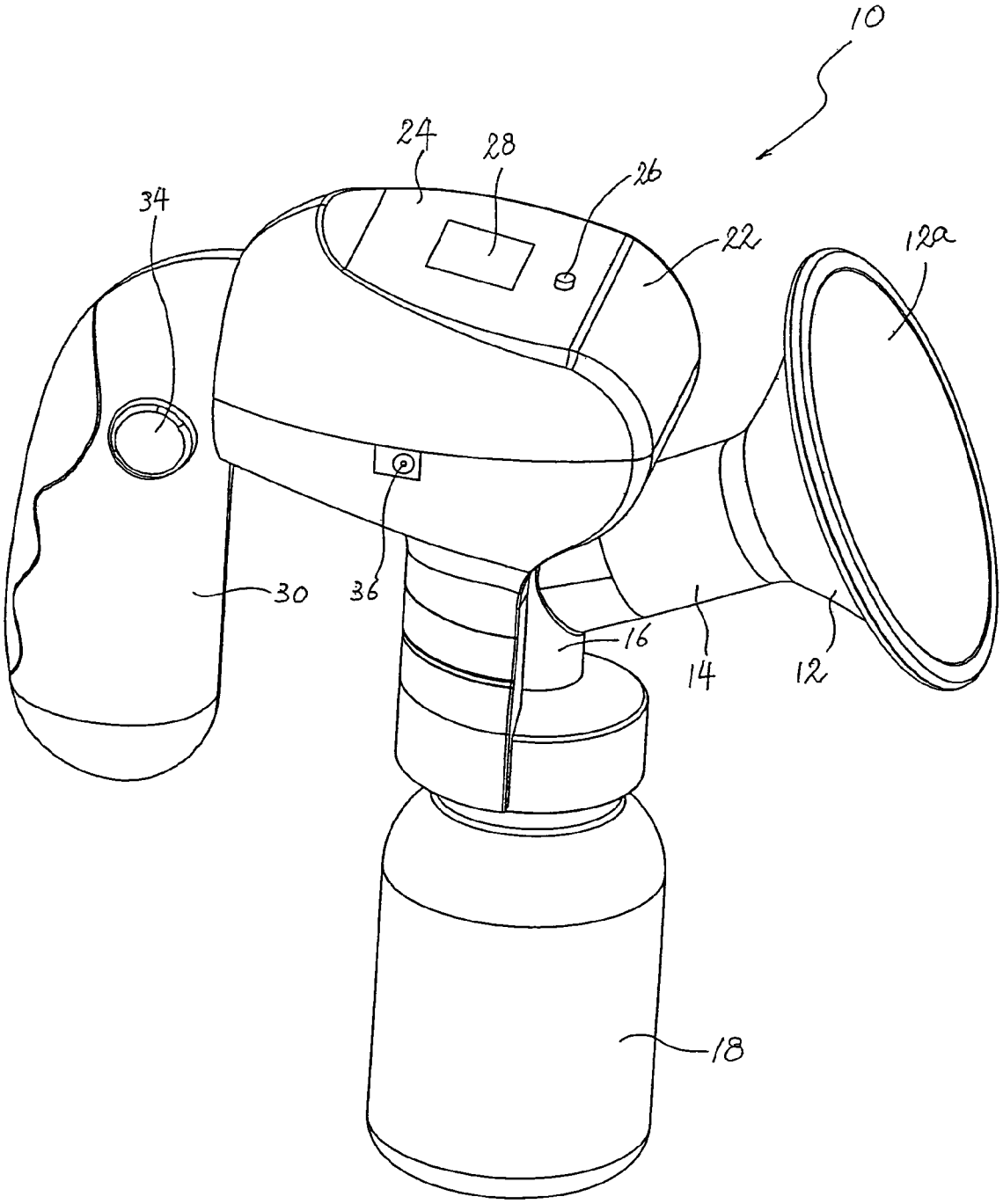

Fig. 1

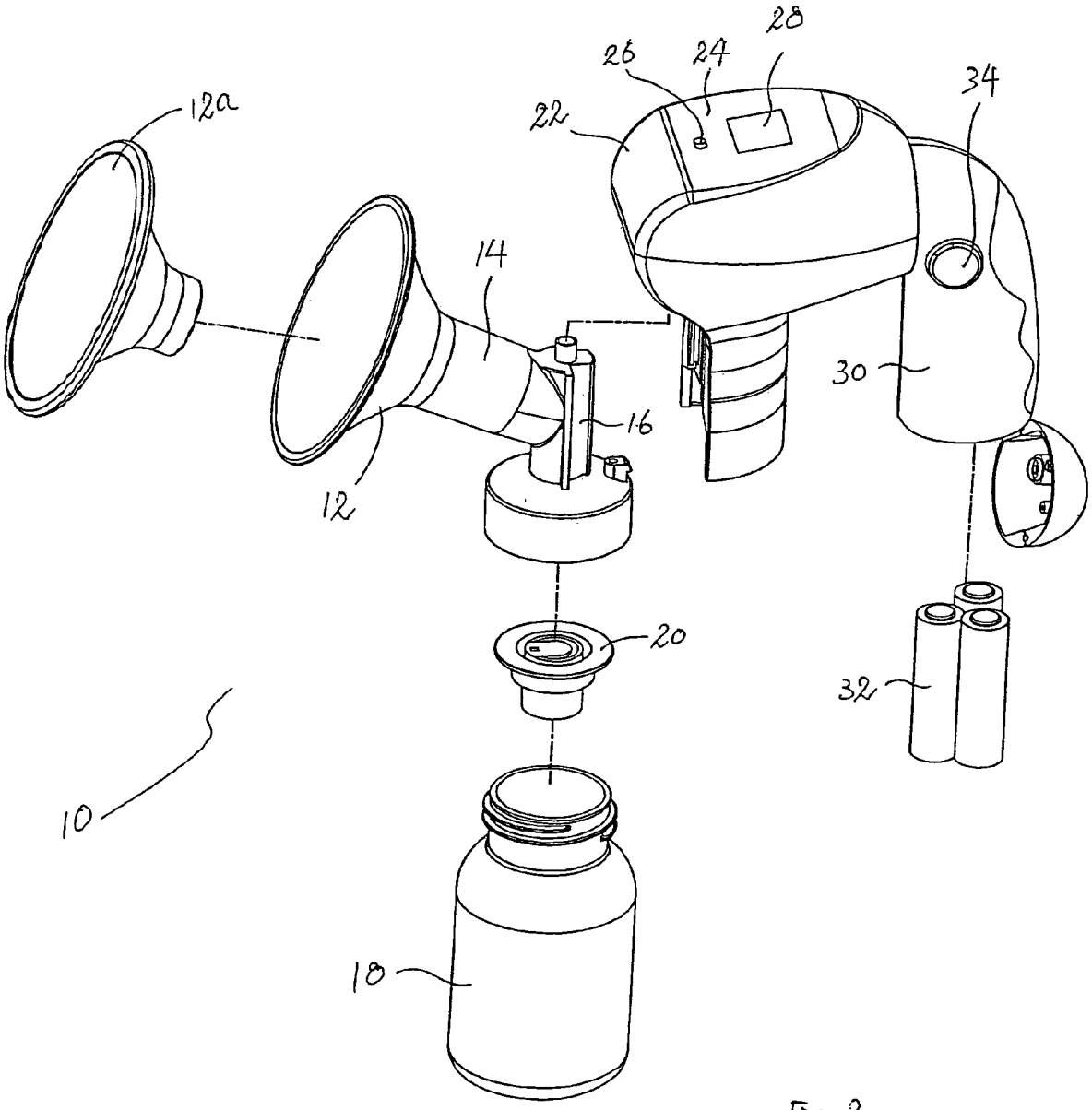

Fig. 2

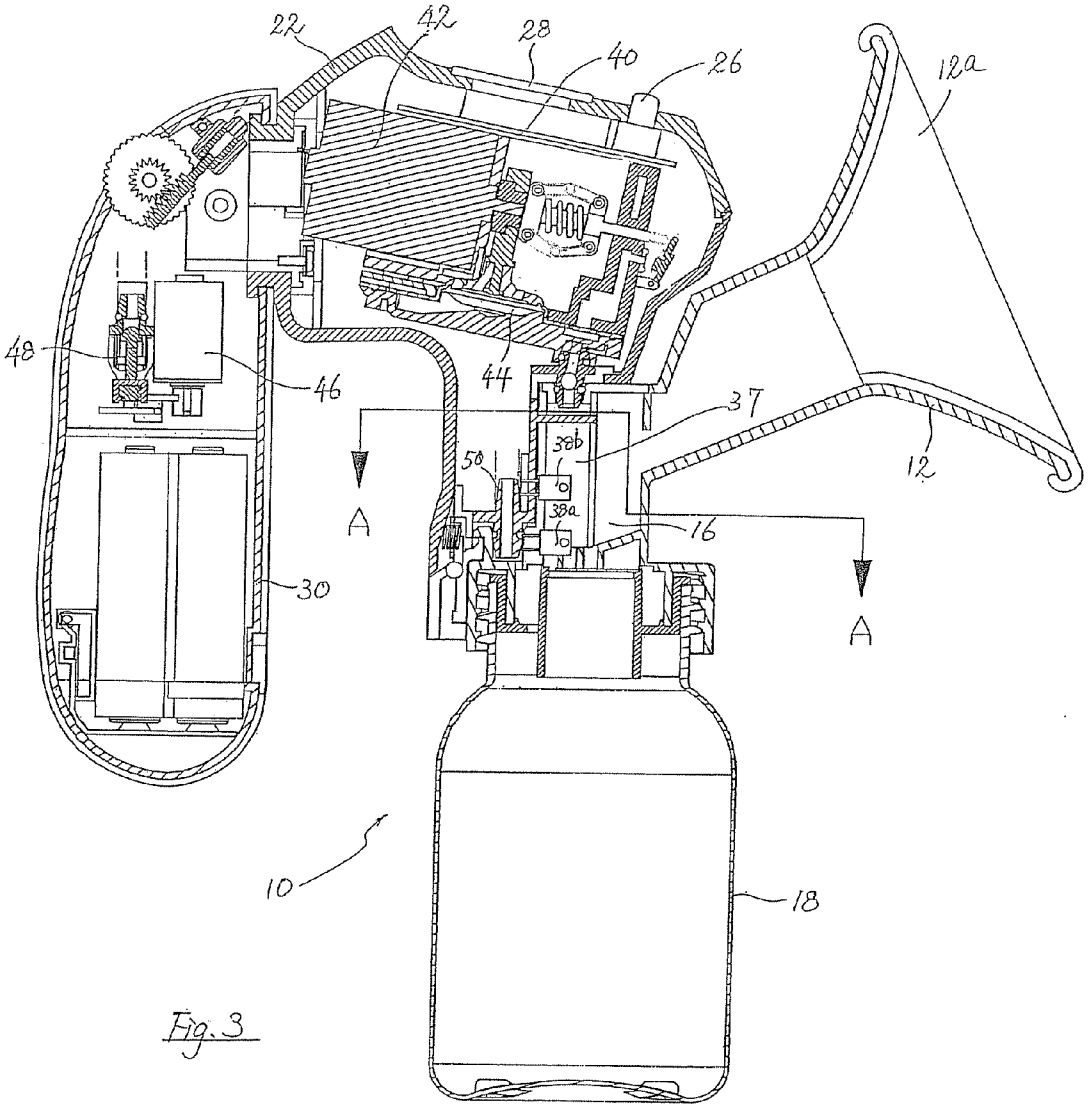

Fig. 3

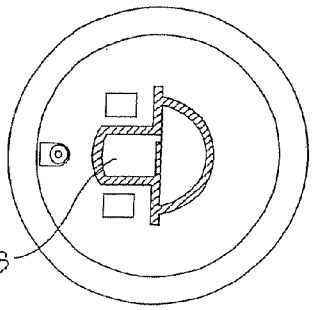

Fig. 4

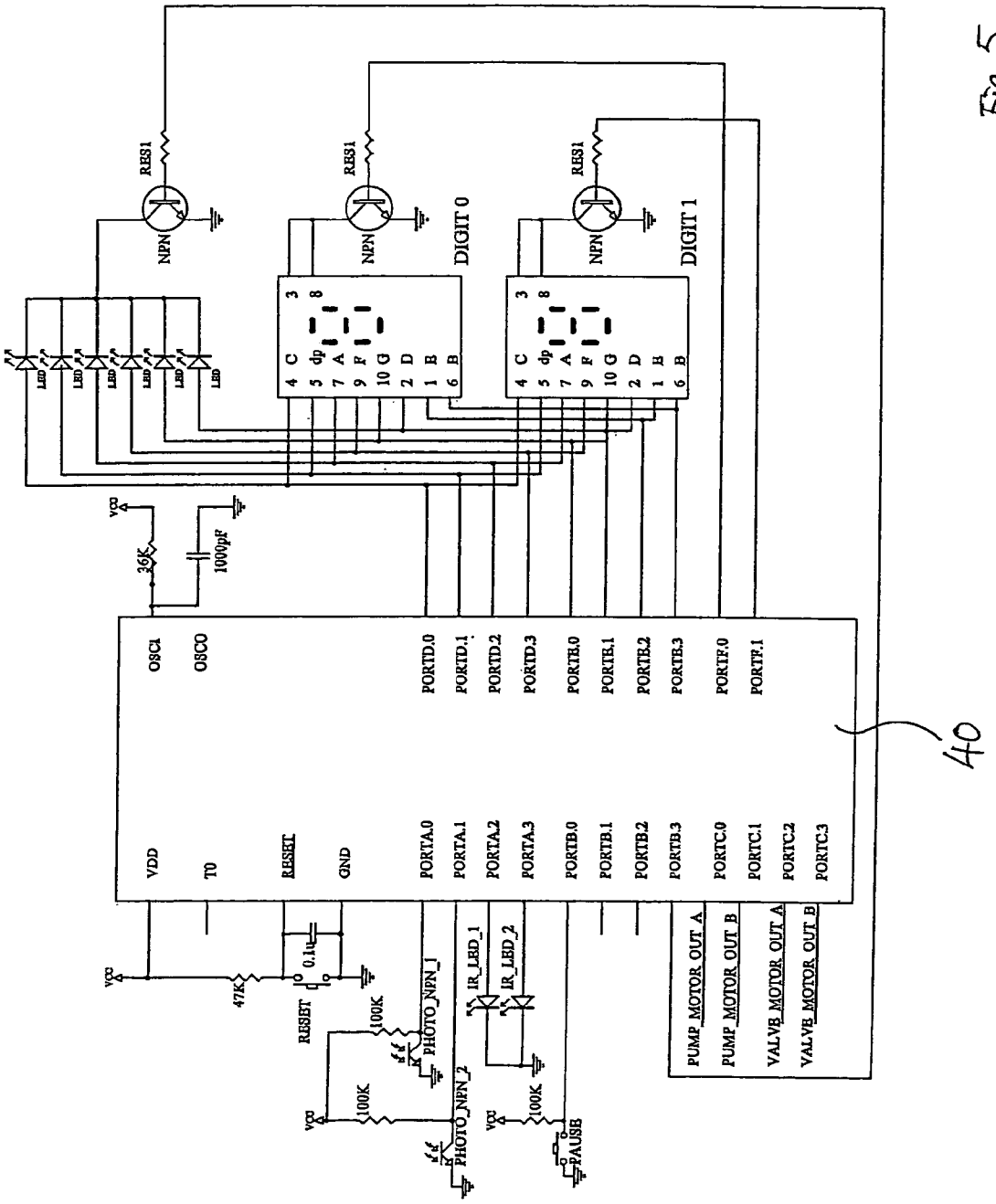
RES1
NPN
DIGIT 0
DIGIT 1
LED
VCC
36K
1000pF
OSC1
OSCO
PORTD.0
PORTD.1
PORTD.2
PORTD.3
PORTB.0
PORTB.1
PORTB.2
PORTB.3
PORTF.0
PORTF.1
VDD
T0
RESET
GND
PORTA.0
PORTA.1
PORTA.2
PORTA.3
PORTC.0
PORTC.1
PORTC.2
PORTC.3
PUMP_MOTOR_OUT_A
PUMP_MOTOR_OUT_B
VALVE_MOTOR_OUT_A
VALVE_MOTOR_OUT_B
47K
0.1u
RESET
100K
PHOTO_NPN_1
PHOTO_NPN_2
IR_LED_1
IR_LED_2
PAUSE
40

Fig. 5

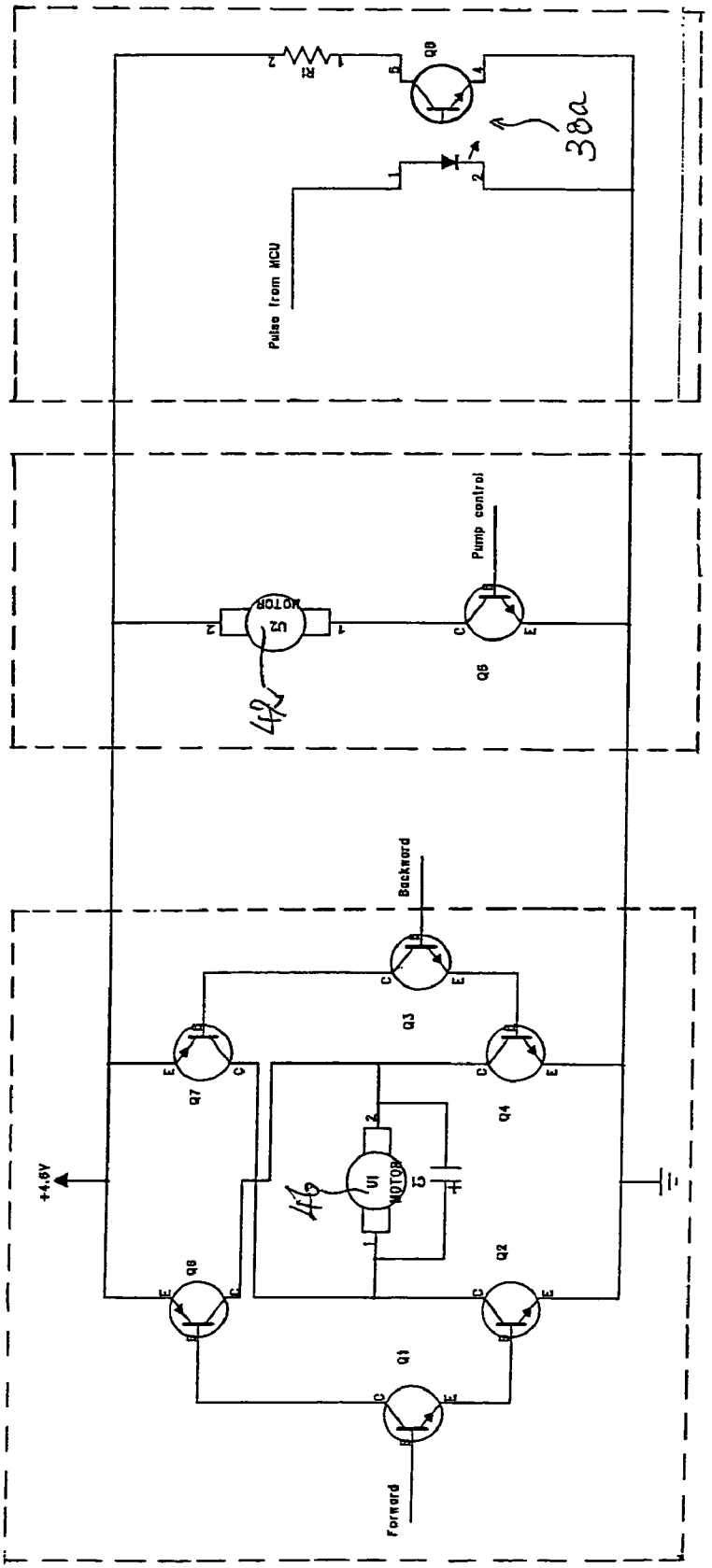
Pulse from MCU
Q9
R2
38a
Pump control
Q6
U2
MOTOR
42
Backward
Q3
Q7
Q4
+4.6V
U1
MOTOR
C5
46
Q8
Q2
Q1
Forward

Fig. 6

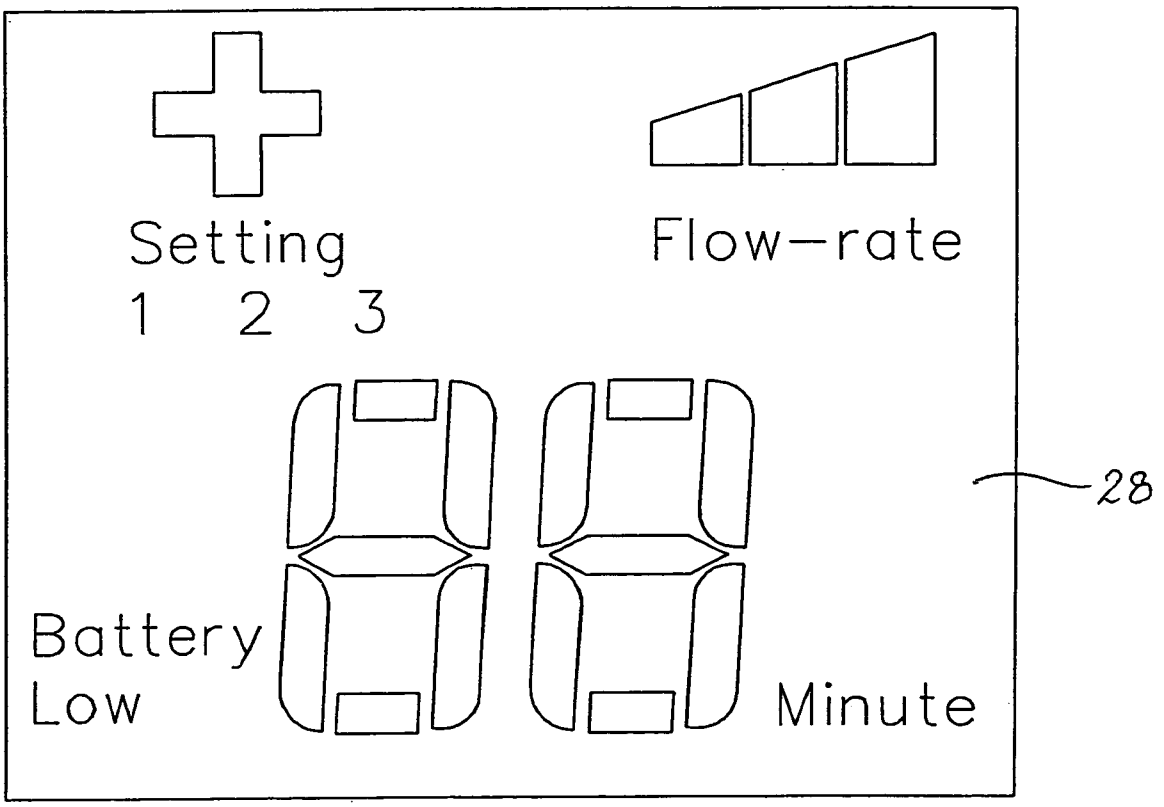

Fig. 7

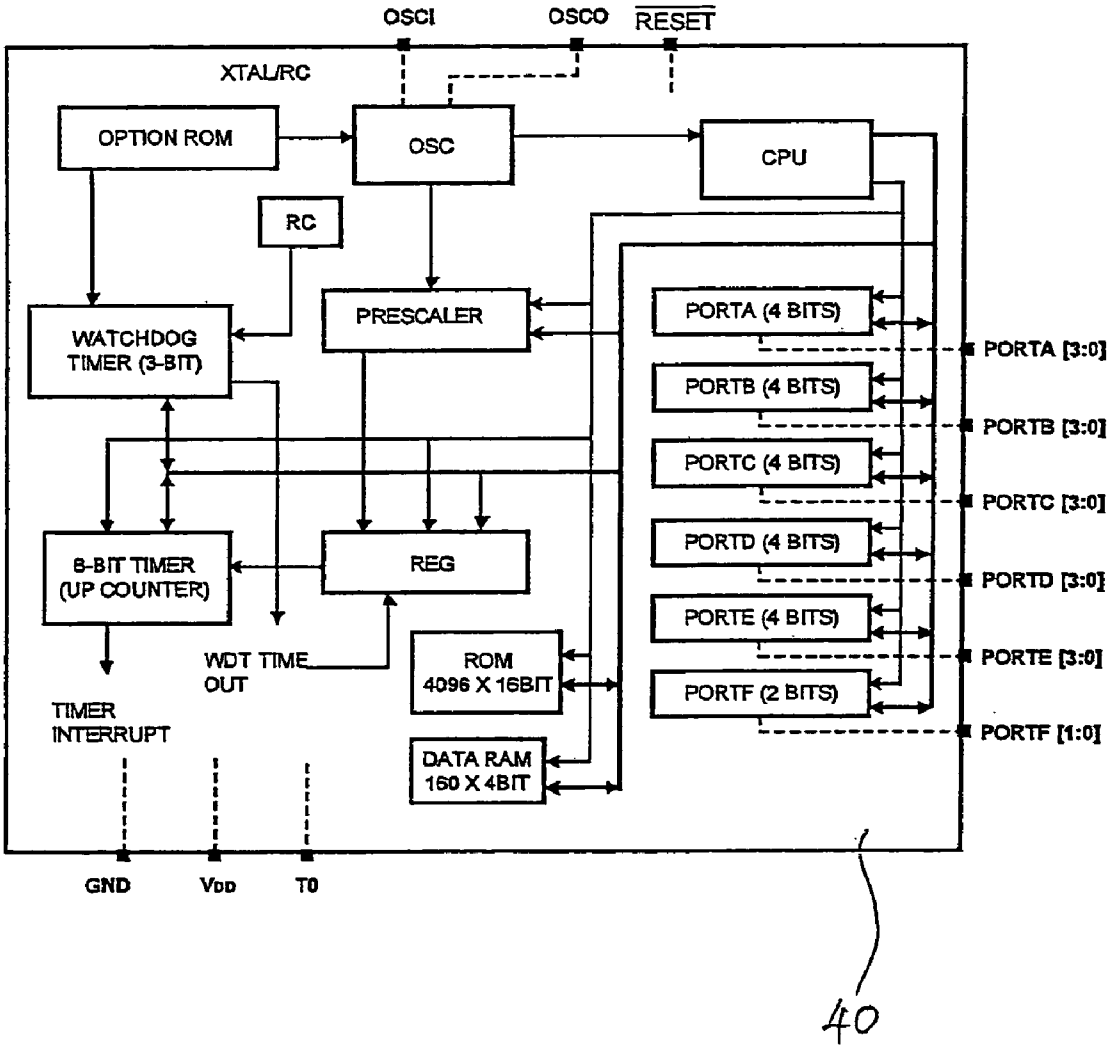
OSCI
OSCO
RESET
XTAL/RC
OPTION ROM
OSC
CPU
RC
WATCHDOG TIMER (3-BIT)
PRESCALER
PORTA (4 BITS)
PORTB (4 BITS)
PORTC (4 BITS)
PORTD (4 BITS)
PORTE (4 BITS)
PORTF (2 BITS)
PORTA [3:0]
PORTB [3:0]
PORTC [3:0]
PORTD [3:0]
PORTE [3:0]
PORTF [1:0]
8-BIT TIMER (UP COUNTER)
REG
WDT TIME OUT
ROM 4096 X 16BIT
TIMER INTERRUPT
DATA RAM 160 X 4BIT
GND
VDD
T0
40

Fig. 8

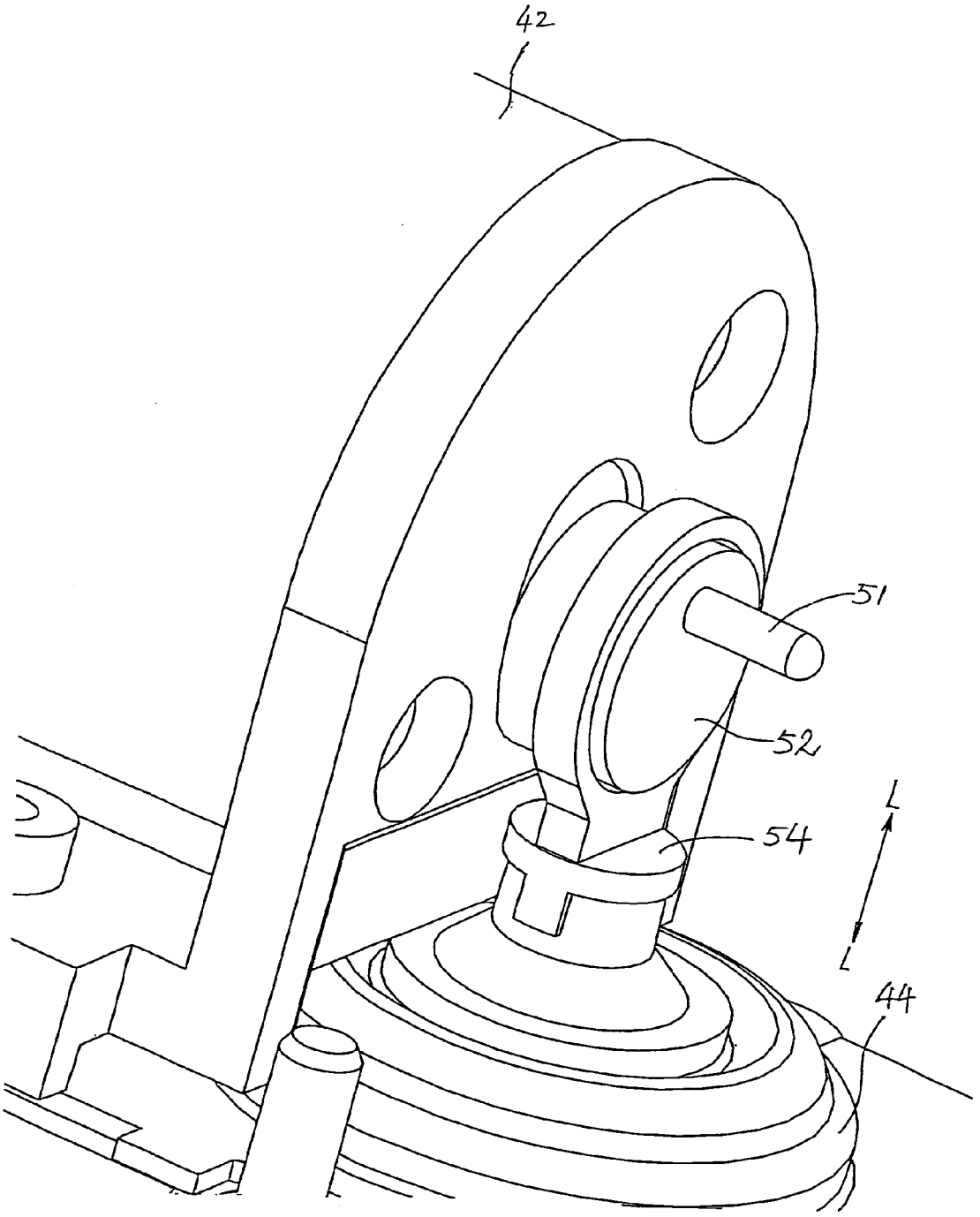

Fig. 9

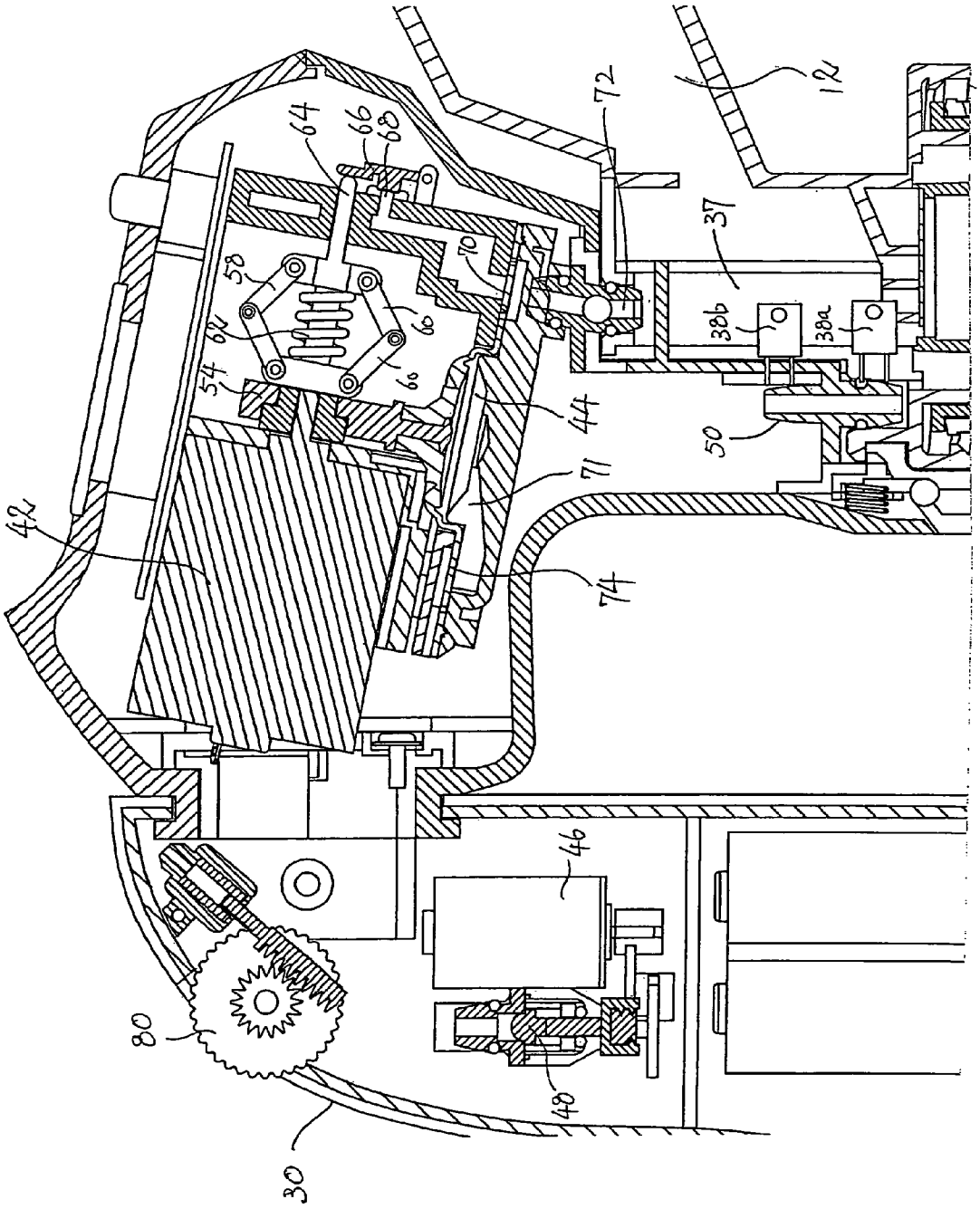

Fig. 10

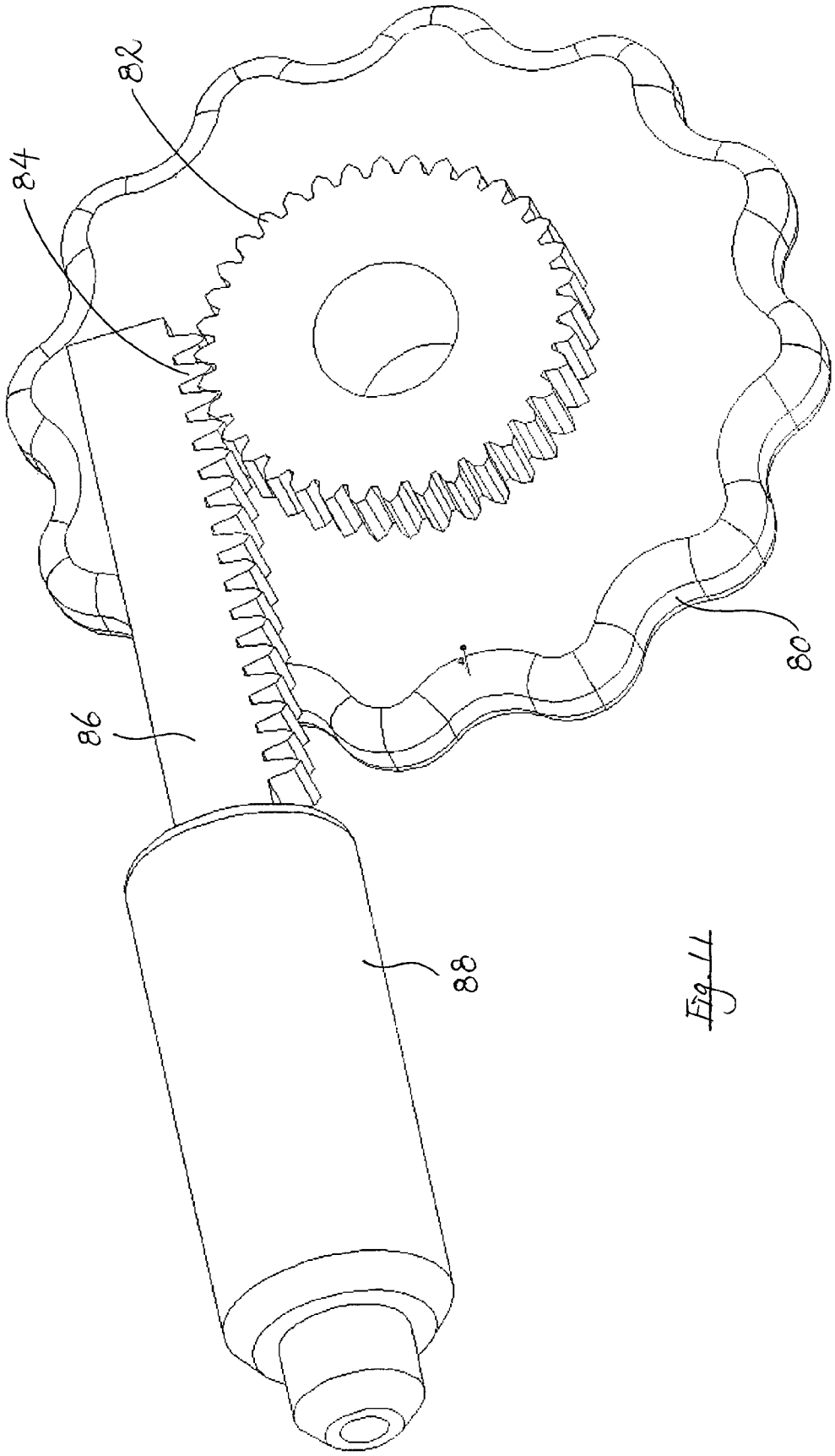

Fig. 11

Fig. 12

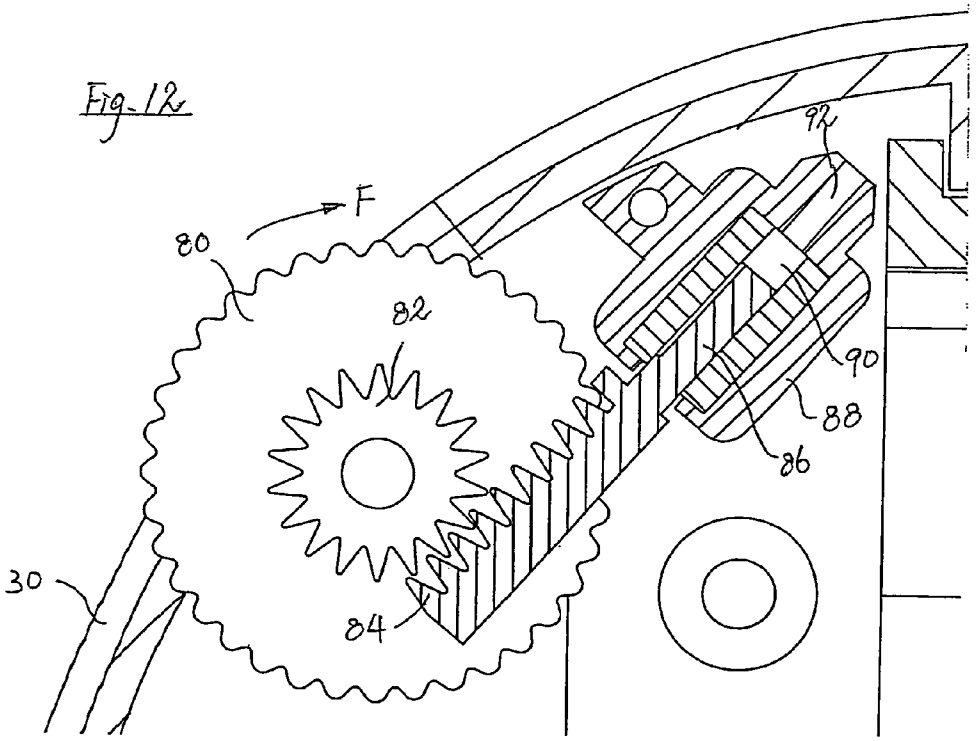

Fig. 13

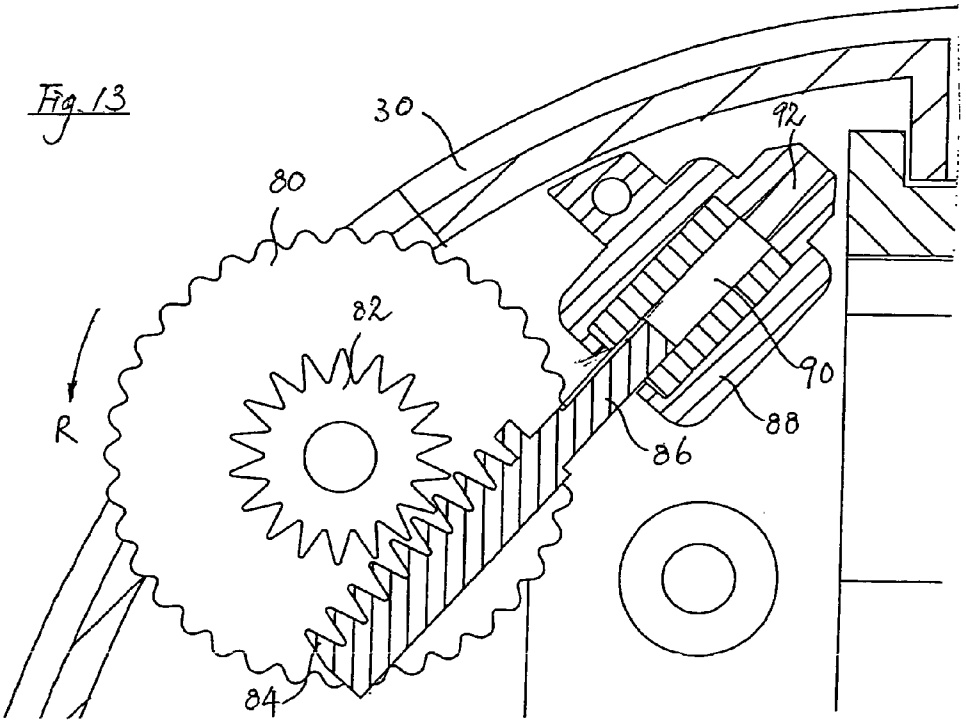

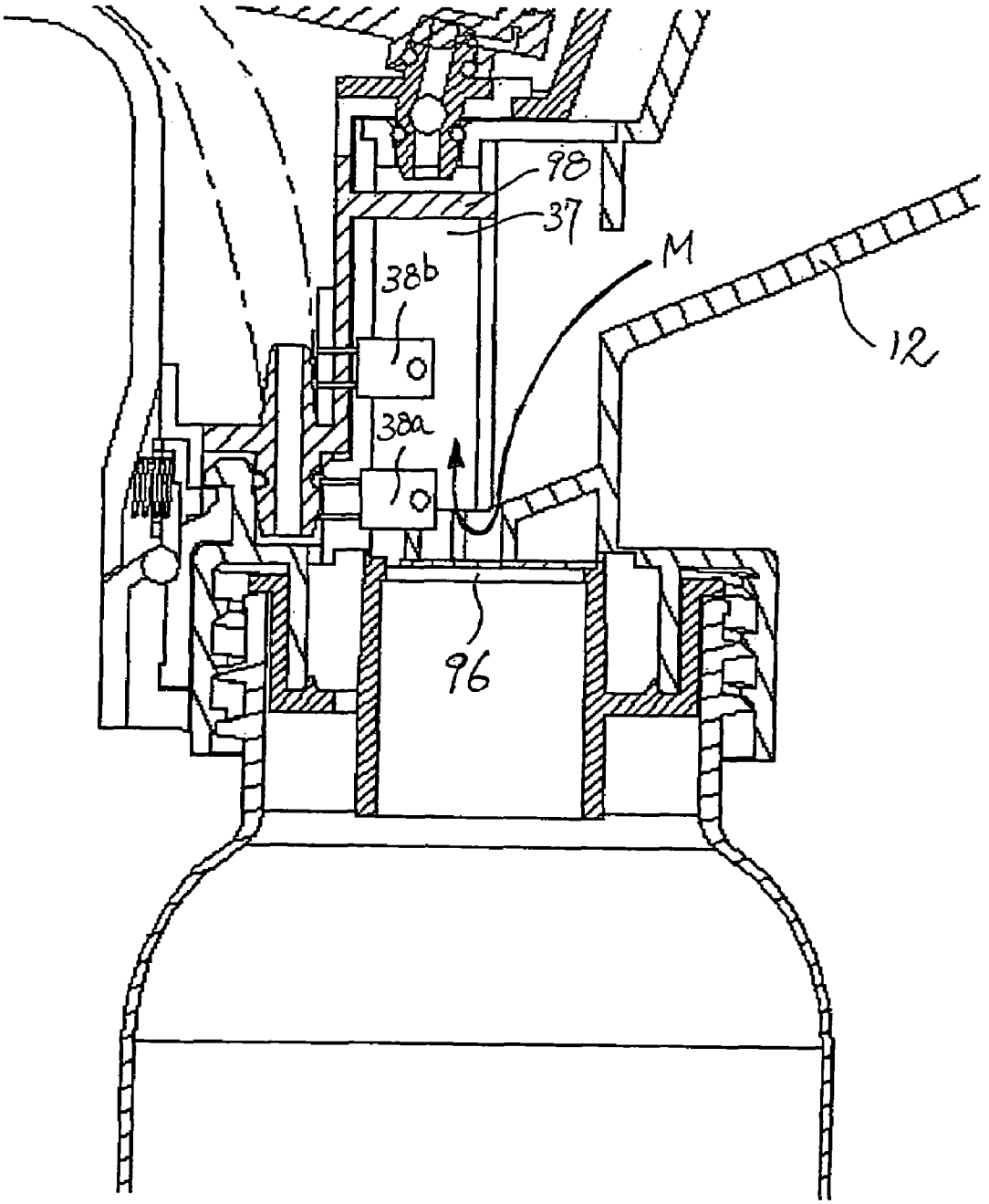

Fig. 14

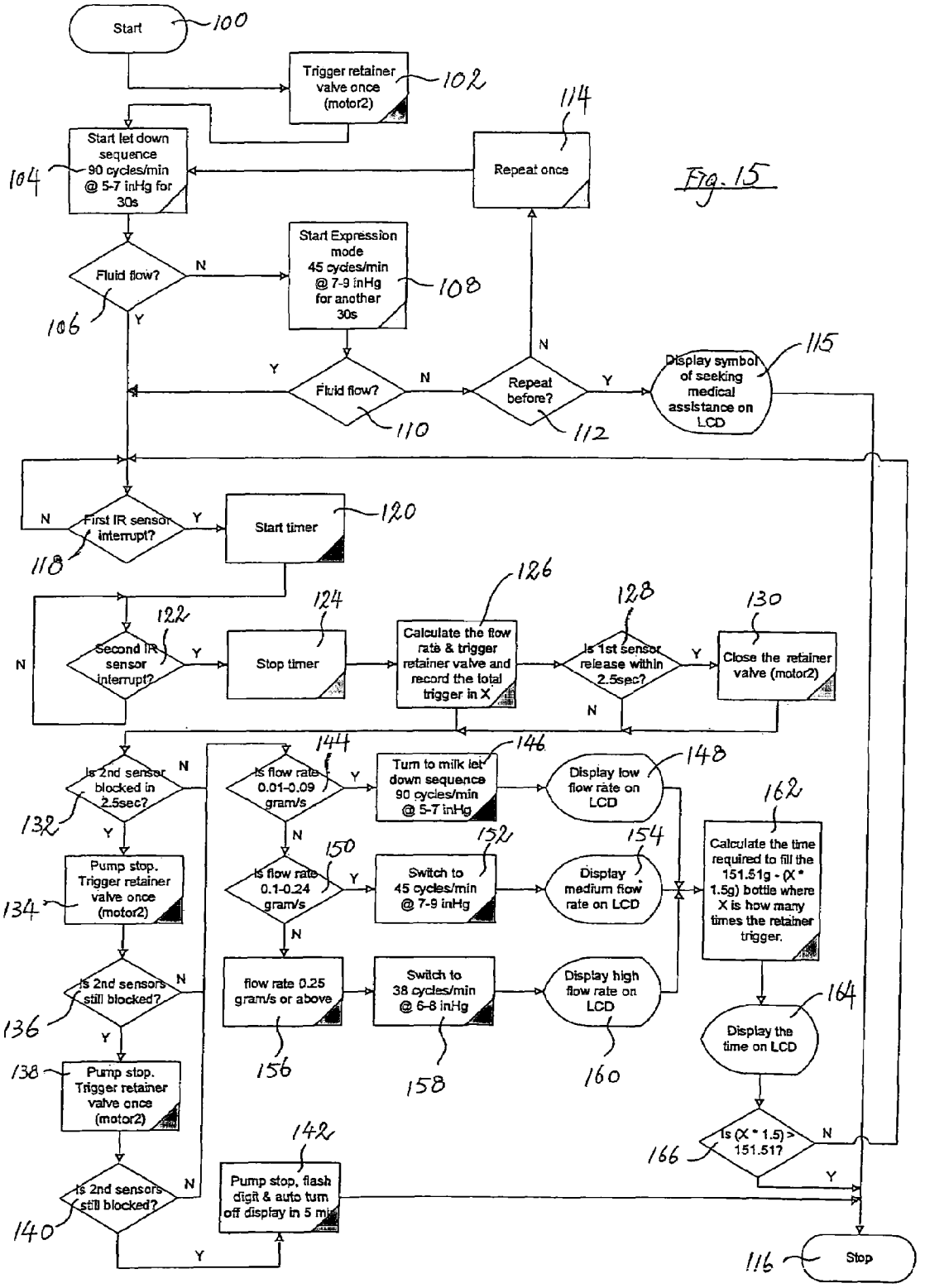
Start
100
Trigger retainer valve once (motor2)
102
Start let down sequence 90 cycles/min @ 5-7 inHg for 30s
104
Repeat once
114
Fig. 15
Fluid flow?
106
N
Y
Start Expression mode 45 cycles/min @ 7-9 inHg for another 30s
108
Fluid flow?
110
Repeat before?
112
Display symbol of seeking medical assistance on LCD
115
First IR sensor interrupt?
118
Start timer
120
Second IR sensor interrupt?
122
Stop timer
124
Calculate the flow rate & trigger retainer valve and record the total trigger in X
126
Is 1st sensor release within 2.5sec?
128
Close the retainer valve (motor2)
130
Is 2nd sensor blocked in 2.5sec?
132
Pump stop. Trigger retainer valve once (motor2)
134
Is 2nd sensors still blocked?
136
Pump stop. Trigger retainer valve once (motor2)
138
Is 2nd sensors still blocked?
140
Pump stop, flash digit & auto turn off display in 5 min
142
Is flow rate 0.01-0.09 gram/s
144
Turn to milk let down sequence 90 cycles/min @ 5-7 inHg
146
Display low flow rate on LCD
148
Is flow rate 0.1-0.24 gram/s
150
Switch to 45 cycles/min @ 7-9 inHg
152
Display medium flow rate on LCD
154
flow rate 0.25 gram/s or above
156
Switch to 38 cycles/min @ 6-8 inHg
158
Display high flow rate on LCD
160
Calculate the time required to fill the 151.51g - (X * 1.5g) bottle where X is how many times the retainer trigger.
162
Display the time on LCD
164
Is (X * 1.5) > 151.517
166
Stop
116

BREAST PUMP

This invention relates to a breast pump and, in particular, an electrically operated breast pump for drawing milk from a user.

BACKGROUND OF THE INVENTION

There are in existence a large number of electrically operated breast pumps, allowing a user, e.g. a mother, to pump milk from her breast. Various pumping mechanisms have been proposed for drawing milk from the mother's breast, including, for example, ones disclosed in U.S. Pat. Nos. 6,045,529 and 6,355,012 issued to Nüesch. Such mechanisms are generally speaking rather complicated, and thus costly to manufacture. In addition, most such mechanisms include gear trains which would generate much noise, especially when the motor is operating at a relatively high speed.

In addition, although a user may, with some existing breast pumps, be able to adjust the pumping cycles, e.g. by varying the number of suction cycles per minute, or adjusting the vacuum level for pumping milk from the user's breast, it is up to the user to decide whether to make such variation or adjustment, and the user may simply have no information on which to decide whether the current pumping rate is suitable or not. In this connection, U.S. Pat. No. 6,547,756 issued to Greter et al. discloses a programmable breast pump which may be programmed to generate a number of different milk expression (extraction) sequences, or curves. In this arrangement, a motorized pump is provided with a microprocessor-based controller. Cards, with microprocessor "chips", containing instructions for different suction curves are also included, which may be inserted into the breast pump, so that the instructions in the cards may be read and acted upon by the breast pump. However, as in the case of other adjustable breast pumps discussed above, it is still up to a user to decide whether to change the mode of pumping operation of the breast pump, and a user may not know whether an alternative, and if so which, suction curve should be applied. A further shortcoming associated with conventional electric breast pumps is that the user is provided with no information as to the time required to fill up the milk receptacle, e.g. bottle.

Such and other shortcomings discussed above are also present in breast pumps disclosed in U.S. Pat. No. 6,673,036 issued to Britto and U.S. Pat. No. 6,090,065 issued to Giles.

It is thus an object of the present invention to provide an electric breast pump in which the aforesaid shortcomings are mitigated or at least to provide a useful alternative to the public.

SUMMARY OF THE INVENTION

According to a first aspect of the present invention, there is provided an electric breast pump including at least one hood member adapted to be fitted over a breast of a user; a chamber adapted to be in fluid communication with said hood member via a first valve; a first motor operatively associated with a pumping member which is movable to draw air from said hood member into said chamber via said first valve; said chamber having at least a first opening and a closure member operatively associated with said first motor, wherein said closure member is movable between a first position to close said first opening and a second position in which said first opening is open; and wherein said closure member is at said first position when said first motor is in operation and is at said second position when said first motor is not in operation.

According to a second aspect of the present invention, there is provided an electric breast pump including at least one hood member adapted to be fitted over a breast of a user; and at least a first sensing unit adapted to detect the passing of milk.

BRIEF DESCRIPTION OF THE DRAWINGS

A preferred embodiment of the present invention will now be described, by way of example only, with reference to the accompanying drawings, in which:

FIG. **1** is a perspective view of an electric breast pump according to the present invention;

FIG. **2** is an exploded view of the breast pump shown in FIG. **1**;

FIG. **3** is a sectional view of the breast pump shown in FIG. **1**;

FIG. **4** is a sectional view taken along the line A-A in FIG. **3**;

FIG. **5** is a circuit diagram of the breast pump shown in FIG. **1**;

FIG. **6** shows part of the circuitry in the breast pump shown in FIG. **1**;

FIG. **7** shows a liquid crystal display (LCD) setting in the breast pump shown in FIG. **1**;

FIG. **8** is a block diagram of an exemplary microcontroller which may be used in the circuit shown in FIG. **5**;

FIG. **9** is an enlarged view showing the engagement between the pump motor and the diaphragm in the breast pump shown in FIG. **1**;

FIG. **10** is an enlarged sectional view of part of the breast pump shown in FIG. **3**;

FIG. **11** is an enlarged perspective view showing the mechanism for manual adjustment of the level of vacuum in the breast pump shown in FIG. **1**;

FIG. **12** shows a first configuration of the manual vacuum adjustment mechanism shown in FIG. **11**;

FIG. **13** shows a second configuration of the manual vacuum adjustment mechanism shown in FIG. **11**;

FIG. **14** shows an enlarged sectional view of the milk flow sensing mechanism in the breast pump shown in FIG. **1**; and

FIG. **15** is a flow chart showing the steps of operation of the breast pump shown in FIG. **1**.

DETAILED DESCRIPTION OF THE PREFERRED EMBODIMENT

FIGS. **1** and **2** show an electrically operated breast pump according to a preferred embodiment of the present invention, generally designated as **10**. The breast pump **10** has a hood **12** adapted to be fitted over a breast of a user in an essentially gas-tight manner, for pumping milk from the breast. An insert **12***a* for contacting the user's breast is received within the hood **12**. The insert **12***a* is made of a soft plastic material, e.g. silicone, to provide comfort to the user during use. The hood **12** is in funnel shape and has a tunnel **14** leading to a connector **16**, which fluidly communicates with the hood **12**, and with a milk-receiving bottle **18** via a valve seat **20**, the structure and function of which will be further discussed below.

The connector **16** is engaged with a head portion **22** which houses most of the operating components of the breast pump **10**, as will be clear from the ensuing discussion. On a top surface **24** of the head portion **22** is provided with an ON/OFF button **26** for selectively activating/deactivating the breast pump **10**. Also provided on the top surface **24** of the head portion **22** is a liquid crystal display (LCD) **28** for displaying various operation information and data relating to the opera-

tion of the breast pump **10**. The head portion **22** is connected with a handle **30**, which also acts as a battery compartment for housing a number of batteries **32** for powering the breast pump **10**. The handle **30** is swivellable relative to the head portion **22** for easy handling. On each side of the handle **30** is provided a PAUSE button **34**, allowing a user to temporarily suspend the operation of the breast pump **10** by pressing the button **34** once, and to resume its operation by pressing the button **34** once again. On a side of the head portion **22** is a power jack **36** which allows the breast pump **10** to be powered by an A/C source, possibly via a transformer (not shown).

FIG. **3** shows a sectional view of the breast pump **10**. As shown in FIG. **3**, provided in a chamber **37** of the connector **16** are two infrared (IR) units **38***a*, **38***b*, each including an IR transmitter and an IR receiver. Housed in the head portion **22** is a pump motor **42** for operating a pump diaphragm **44** for generating a low pressure (vacuum) in the breast pump **10**. Within the handle **30** is a valve motor **46** for operating a needle valve **48**. The valve **48** is pneumatically connected, e.g. via a hose (not shown), with a nozzle **50** which is in turn pneumatically connected with the milk-receiving bottle **18**.

Housed in the head portion **22** is a microcontroller **40** for controlling the operation of various electronic and electrical components of the breast pump **10**. As shown in FIG. **5**, the microcontrolller **40** is electrically connected with and controls the operation of the pump motor **42**, the valve motor **46**, and the LCD display **28**. The microcontroller **40** is also connected with and receives instructions and/or signals from the PAUSE buttons **34** and the IR units **38***a*, **38***b*. FIG. **6** shows in more detail a circuitry which controls the operation of the valve motor **46**, the pump motor **42**, and the IR units **38***a*, **38***b*, of which only one set **38**a is shown here.

FIG. **7** shows the setting of the LCD display **28**, and it can be seen that the LCD display **28** may display such information as the setting being used, the flow-rate (slow, medium, high), battery low, and the remaining time (in minutes) required for filling the bottle **18**.

A microcontroller **40** suitable for use in the breast pump **10** may be one traded by Sino Wealth Microelectronics Corporation Limited, of Hong Kong, under serial number SH6622A, although other similar microcontrollers may also be used. SH6622A is a 4-bit microcontroller, which integrates a 4-bit CPU core with SRAM, 4K program ROM, timer and I/O Port. FIG. **8** shows a block diagram of SH6622A. The CPU of SH6622A contains the following function blocks: Program Counter, Arithmetic Logic Unit (ALU), Carry Flag, Accumulator, Table Branch Register, Data Pointer (INX, DPH, DPM, and DPL), and Stack.

FIG. **9** shows an enlarged perspective view of the pump motor **42**, having an output spindle **51** engaged with an eccentric cam **52** which in turn carries a yoke **54** fixed with the pump diaphragm **44**. By way of such an arrangement, rotational movement of the output pin **51** is converted into linear reciprocal movement of the diaphragm **44** in the direction of the bi-directional arrow L-L.

As can be clearly seen in FIG. **10**, fixed to the output spindle **51** of the pump motor **42** is a linkage mechanism **58** comprising six links **60** linked with one another in a hexagonal ring-shaped structure. Each link **60** is swivellable relative to two adjacent links **60** to which it is pivotally hinged. Over the output spindle **51** is also provided with a spring **62** which biases an end pin **64** outwardly, which in turn acts on and biases a lid **66** away from a vent hole **68**. The diaphragm **44** is positioned in a chamber **71** which is closeable by the lid **66**, a first one-way valve **70**, and a second one-way valve **74**. The first one-way valve **70** only allows air to enter the chamber **71** from a conduit **72**, which is in turn in fluid communication with the hood **12**. The second one-way valve **74** only allows air to exit the chamber **71**.

When the motor **42** is not in operation, the linkage mechanism **58** will be biased by the spring **62** to assume the shape and configuration as shown in FIGS. **3** and **10**. During operation of the pump motor **42**, rotation of the output spindle **51** will bring about simultaneous and corresponding rotation of the linkage mechanism **58**, whereby the hexagonal ring-shaped structure **58** will "flatten" because of the centrifugal force generated by the rotation, thus retracting the end pin **64** against the outward biasing force of the spring **62**. The lid **66** will thus close the vent hole **68**. With the vent hole **68** closed by the lid **66**, linear reciprocal movement of the diaphragm **44** in the direction of the bi-directional arrow L-L will draw air from the hood **12**, through the conduit **72** and the first one-way valve **70**, into the chamber **71**, and push the air out through the second one-way valve **74**, thus generating a lower pressure ("vacuum") in the hood **12** relative to the outside atmospheric pressure, and mimicking a sucking action of a baby on a mother's breast. The sucking/releasing cycle is completed by a releasing action when the motor **42** stops rotation. Upon stopping of the motor **42**, the linkage mechanism **58** will, under the biasing force of the spring **62**, resume the stable shape and configuration as shown in FIGS. **3** and **10**, whereupon the lid **66** will be pushed by the end pin **64** away from the vent hole **68**, to thereby open the vent hole **68** as shown in FIG. **3**. When the vent hole **68** is opened, air will enter the vent hole **68**, and then back into the hood **12**, thus releasing the "vacuum" in the hood **12**.

To allow further versatility of the breast pump **10**, a manual pressure adjustment mechanism is provided, allowing the user to manually adjust the level of "vacuum" applied during operation of the breast pump **10**, to suit individual need in different times. As shown in FIG. **11**, the manual pressure adjustment mechanism includes a wheel **80** with a gear **82** in mesh with a pinion **84** on an end of a pin **86** and a valve seat **88**. As can be seen in FIGS. **10**, **12** and **13**, the wheel **80** is fixed to the handle **30** for rotational movement. The wheel **80** may be moved by a thumb of a user to rotate relative to the handle **30**, about the longitudinal axis of the wheel **80**. The valve seat **88** is also fixedly secured to the handle **30**. By way of such an arrangement, and because of the engagement between the gear **82** and the pinion **84**, rotation of the wheel **80** will cause the pin **86** to move in or out of a recess **90** in the valve seat **88**. In particular, rotation of the wheel **80** in the direction indicated by the arrow F in FIG. **12** will retrieve the pin **86** from the recess **90**, whereas rotation of the wheel **80** in the direction indicated by the arrow R in FIG. **13** will insert the pin **86** further into the recess **90**.

The valve seat **88** is made of a thermoplastic elastomer (TPE) or silicone, and when the pin **86** is fully received within the recess **90**, the valve seat **88** is fully sealed, whereas air may enter the valve seat **88** if the pin **86** is retrieved from the valve seat **88**, and the amount of air allowed to enter the valve seat **88** will depend on the extent to which the pin **86** is retrieved from the valve seat **88**. The recess **90** is in fluid communication with a nozzle **92**, which is in turn in fluid communication with the hood **12**, e.g. via a hose (not shown) connected to the conduit **72**, so that the pressure within the hood **12** when such is applied over a breast of a user may be fine-tuned by the user by manually operating the wheel **80**.

When the breast pump **10** is fitted over a breast of a user and the pump motor **42** is activated, the pump diaphragm **44** will reciprocate to generate a lower pressure ("vacuum") in the hood **12**, thus stimulating milk ejection reflex and subsequent expression of milk. Milk from the breast of the user will flow

into the hood **12** and subsequently into the chamber **37** in the direction of the arrow M. The milk will accumulate in the chamber **37**, first blocking the transmission of infrared signals between the transmitter and receiver of the lower IR unit **38***a*, and subsequently that between the transmitter and receiver of the upper IR unit **38***b*.

In the valve seat **20** is a one-way valve **96** which allows milk to enter the bottle **18**, but not vice versa. Because the hood **12** is at a lower pressure than the bottle **18** during operation of the pumping action of the diaphragm **44**, the higher pressure in the bottle **18** will prevent the milk in the chamber **37** from entering the bottle **18**, thus allowing the milk level to rise in the chamber **37**. It may take several sucking/releasing cycles before the milk level rises to, and blocks the transmission of infrared signals between the transmitter and receiver of, the upper IR unit **38***b*. When the milk level rises to the upper IR unit **38***b*, the motor **42** will stop, thus releasing the "vacuum" in the hood **12**, in the manner discussed above. In addition, the needle valve **48** will be opened by the valve motor **46**, whereby air will exit the bottle **18** via the nozzle **50**, and subsequently out of the needle valve **48**. The milk in the chamber **37** will thus fall, on its own weight, through the one-way valve **96** into the bottle **18**, during the course of which the level of milk in the chamber **37** will fall. The transmission of IR signals between the transmitter and receiver of the upper IR unit **38***b* will thus resume, and then that between the transmitter and receiver of the lower IR unit **38***a* will resume.

As shown clearly in FIGS. **4** and **14**, above the upper IR unit **38***b* is a partition **98** which prevents milk from entering the interior of the head portion **22**, e.g. when the breast pump **10** is accidentally knocked over. Milk entering the interior of the head portion **22** may damage the movement parts of the breast pump **10**, thus shortening its useful life, or necessitating servicing.

Researches indicate that a baby's feeding is not a single continuous process, but rather a two-phased process in which the baby will initially suckle rapidly, called "stimulation". Once the breast has been sufficiently stimulated, milk begins flowing and the baby will settle into a slower, more relaxed sucking speed for the actual feeding phase, called "expression". The breast pump **10** can mimic the natural feeding pattern of a baby by first exhibiting rapid sucking/releasing actions to stimulate the milk ejection reflex (MER) or "let down". Once milk begins to flow, the breast pump **10** will then exhibit slower and longer sucking/releasing actions which help to maximize milk flow in less time.

The manner of operation of the breast pump **10** will be further discussed by reference to FIG. **15**, which shows a flow,v chart of the steps of operation of the breast pump **10**. Once the breast pump **10** is started (Step **100**), the valve motor **46** will be triggered once to close the needle valve **48**, which is called "retainer valve" in FIG. **15** (Step **102**). A "let down" sequence will be operated in which sucking/releasing actions will be carried out at a speed of **90** cycles per minute at a pressure of 5-7 inch mercury (in Hg) for 30 seconds (Step **104**). If no milk flows (Step **106**), an "expression" mode will be operated in which sucking/releasing actions will be carried out at a speed of 45 cycles per minute at a pressure of 7-9 in Hg for 30 seconds (Step **108**). If there is still no milk flow (Step **110**), the microcontroller **40** of the breast pump **10** (hereinafter simply referred to as the "breast pump **10**" for simplicity) will determine if this is the first time such occurs since the breast pump **10** is started (Step **112**). If not, the breast pump **10** will repeat the above process (Step **114**) by carrying out the "let down" sequence again (Step **104**). If, however, such a situation has already occurred once in this operation, a sign or symbol alerting the user to seek medical assistance, e.g. to undergo certain milk flow stimulation operation, will be displayed on the LCD display **28** (Step **115**), and the breast pump **10** will also cease operation immediately (Step **116**). For carrying out sucking/releasing actions at a frequency of 45 cycles per minute, the pump motor **42** may be activated for 0.8 second, then deactivated for 0.53 second, and then activated for 0.8 second, and so on.

If milk flows after the "let down" sequence (Step **104**) or the "expression" sequence (Step **110**), the breast pump **10** will then check whether transmission of IR signals in the lower IR unit **38***a* is interrupted (Step **118**). If so, a timer in the microcontroller **40** will start timing (Step **120**). The breast pump **10** will then check whether transmission of IR signals in the upper IR unit **38***b* is interrupted (Step **122**). If so, the timer will stop (Step **124**). Because the volume in the chamber **37** between the lower IR unit **38***a* and the upper IR unit **38***b* is known, it is possible to thus calculate the rate of flow of milk (in grams per second, g/s) and such is calculated. The valve motor **46** will be triggered once to open the needle valve **48**, thus allowing milk in the chamber **37** to fall into the bottle **18**. The breast pump **10** will also count the number of times of such triggers of the valve motor **46** as "X" (Step **126**).

The breast pump **10** will then check whether transmission of IR signals in the lower IR unit **38***a* resumes ("released") within 2.5 seconds (Step **128**). If so, the valve motor **46** will be triggered once to close the needle valve **48** (Step **130**). If transmission of IR signals in the lowver IR unit **38***a* does not resume ("released") within 2.5 seconds (Step **128**), or after the closing of the needle valve **48** (Step **130**), the breast pump **10** will then check if transmission of IR signals in the upper IR unit **38***b* is still blocked in 2.5 seconds (Step **132**). If so, the pump motor **42** will stop operation, and the needle valve **48** will be opened once again (Step **134**). If transmission of IR signals in the upper IR unit **38***b* is still blocked (Step **136**), the pump motor **42** will stop operation again, and the needle valve **48** will be opened once again (Step **138**). If transmission of IR signals in the upper IR unit **38***b* is still blocked (Step **140**), the pump motor **42** will stop, a warning signal will be given on the LCD display **28**, and the LCD display **28** will be turned off automatically in 5 minutes, (Step **142**), and the operation of the breast pump **10** will also stop automatically (Step **116**). Such will prevent the motor **42** from continuing operation when, e.g. the breast pump **10** accidentally topples over.

If transmission of IR signals in the upper IR unit **38***b* is not blocked after Step **132**, Step **136** or Step **140**, the breast pump **10** will operate according to the milk flow rate obtained in Step **126**. If the flow rate is between 0.01 to 0.09 g/s (Step **144**), the breast pump **10** will switch to "let down" sequence (Step **146**) in which sucking/releasing action is carried out at a frequency of 90 cycles per minute at a pressure of 5-7 in Hg, and a sign or symbol indicating low flow rate will be displayed on the LCD display **28** (Step **148**). If the flow rate is between 0.1 to 0.24 g/s (Step **150**), the breast pump **10** will carry out sucking/releasing action at a frequency of 45 cycles per minute at a pressure of 7-9 in Hg (Step **152**), and a sign or symbol indicating medium flow rate will be displayed on the LCD display **28** (Step **154**). If the flow rate is 0.25 g/s or above (Step **156**), the breast pump **10** will carry out sucking/releasing action at a frequency of 38 cycles per minute at a pressure of 6-8 in Hg (Step **158**), and a sign or symbol indicating high flow rate will be displayed on the LCD display **28** (Step **160**).

According to the present example, the bottle **18** is designed to hold 151.51 g of milk, and in each cycle, the milk that enters, and is thus collected by, the bottle **18** is 1.5 g. Based on such information, and the frequency at which sucking/releasing action is carried out, the breast pump **10** is able to calcu-

late and display the remaining time required to fill the bottle **18**. In this example, it normally requires **101** triggers of the valve motor **46**, "X", to fill the bottle **18**. Depending on the number of times, "X", the valve motor **46** has already been triggered to open the needle valve **48**, the breast pump **10** can calculate the remaining time required for filling up the bottle **18** (Step **162**). The remaining time required will be displayed on the TCD display **28** (Step **164**).

If 1.5X>151.51 (Step **166**), it means that the bottle **18** is filled up, the breast pump **10** will stop (Step **116**). If not, the breast pump **10** will check again if transmission of IR signals in the lower IR unit **38***a* is interrupted (Step **118**), and the pumping action will go on again.

It should be understood that the above only illustrates an example whereby the present invention may be carried out, and that various modifications and/or alterations may be made thereto without departing from the spirit of the invention. For example, although the present invention is here described in the context of a "one-pump" model, it is equally applicable to a "two-pump" model, in which a second breast pump is pneumatically connected with the first pump to share in the suction vacuum generated by the pump motor.

It should also be understood that certain features of the invention, which are, for clarity, described in the context of separate embodiments, may be provided in combination in a single embodiment. Conversely, various features of the invention which are, for brevity, described in the context of a single embodiment, may also be provided separately or in any appropriate sub-combinations.

What is claimed is:

1. An electric breast pump comprising:

at least one hood member adapted to be filled over a breast of a user;

a chamber in air communication with said hood member via a first valve;

a first motor;

a pumping member movable by said first motor to draw air from said hood member into said chamber via said first valve;

a milk-receiving bottle in liquid communication with said hood member; and

a second valve in air communication with said bottle,

wherein said chamber has at least a first opening and a closure member which is movable by said first motor between a first position to close said first opening and a second position in which said first opening is open; and

wherein said closure member remains at said first position when said first motor is in operation and remains at said second position when said first motor is not in operation.

2. A breast pump according to claim **1** wherein said closure member is biased towards said second position.

3. A breast pump according to claim **2** wherein said closure member is biased towards said second position by a spring member.

4. A breast pump according to claim **1** wherein said first valve is a one-way valve.

5. A breast pump according to claim **1** wherein said first motor is engaged with said closure member via at least one ring-shaped structure.

6. A breast pump according to claim **5** wherein said ring-shaped structure is movable between a stable first configuration to which said ring-shaped structure is biased and a second configuration in which said closure member is allowed to occupy said first position.

7. A breast pump according to claim **5** wherein said ring-shaped structure is at said stable first configuration when said first motor is not in operation and at said second configuration when said first motor is in operation.

8. A breast pump according to claim **7** wherein said ring-shaped structure rotates when said first motor is in operation.

9. A breast pump according to claim **8** wherein said ring-shaped structure moves from said first configuration to said second configuration by centrifugal force when said ring-shaped structure rotates.

10. A breast pump according to claim **1** wherein said chamber includes at least a second opening closable by a third valve.

11. A breast pump according to claim **10** wherein said third valve is a one-way valve.

12. A breast pump according to claim **11** wherein said third valve only allows air to exit said chamber.

13. A breast pump according to claim I further including an adjustment member manually operable to adjust the air pressure in said hood member.

14. A breast pump according to claim **13** wherein said adjustment member includes a fourth valve member in air communication with said hood member.

15. A breast pump according to claim **14** wherein said adjustment member further includes a wheel member manually operable to adjust the amount of air allowed to enter the fourth valve.

16. A breast pump according to claim **1** further including a second motor for selectively opening or closing said second valve.

17. A breast pump according to claim **1** further including at least one sensing unit adapted to detect the passing of milk.

18. A breast pump according to claim **17** further including a data processing unit adapted to calculate the rate of flow of milk on the basis of data received from said sensing unit.

19. A breast pump according to claim **18** wherein said data processing unit is adapted to calculate the remaining time required for filling a receptacle of milk associated with said breast pump.

20. A breast pump according to claim **18** wherein the frequency of movement of said pumping member is adapted to be varied on the basis of the rate of flow of milk calculated by said data processing unit.

21. A breast pump according to claim **17** wherein said sensing unit includes at least one infrared (IR) transmitter and an IR receiver adapted to receive IR signals from said IR transmitter.

22. A breast pump according to claim **21** wherein IR signals transmitted by said IR transmitter are prevented from being received by said IR receiver upon passing of milk therebetween.

23. A breast pump according to claim **22** wherein said first motor is adapted to stop operation when IR signals transmitted by said IR transmitter are prevented from being received by said IR receiver for a predetermined period of time.

24. A breast pump according to claim **17** further including at least a second sensing unit.

25. A breast pump according to claim **24** wherein said first and second sensing units are arranged in series in the path of flow of milk in said breast pump.

26. A breast pump according to claim **25** further including a timer for determining the time duration between when passing of milk is detected by said first sensing unit and when passing of milk is detected by said second sensing unit.

27. A breast pump according to claim **17** further including a display for visually indicating the general rate of flow of milk into said breast pump.

28. An electric breast pump comprising:

at least one hood member adapted to be fitted over a breast of a user; and

a first chamber in air communication with said hood member via a first valve;

a first motor;

a pumping member movable by said first motor to draw air from said hood member into said chamber via said first valve;

a milk-receiving bottle in liquid communication with said hood member;

a second valve in air communication with said bottle; and

a second chamber in liquid communication with said hood member and said bottle;

said second chamber including at least an infrared (IR) unit, said

IR unit including at least one IR transmitter for transmitting IR signals and at least one IR receiver for receiving said IR signals transmitted by said IR transmitter.

29. An electric breast pump according to claim **28** further including a data processing unit adapted to calculate the rate of flow of milk on the basis of data received from said IR unit.

30. A breast pump according to claim **29** further including a display for visually indicating the general rate of flow of milk into said breast pump.

31. A breast pump according to claim **29** wherein said data processing unit is adapted to calculate the remaining time required for filling said bottle.

32. A breast pump according to claim **29** wherein the frequency of movement of said pumping member is adapted to be varied on the basis of the rate of flow of milk calculated by said data processing unit.

33. A breast pump according to claim **28** further including at least a second IR unit.

34. A breast pump according to claim **33** wherein said first and second IR units are arranged in series in the path of flow of milk in said breast pump.

35. A breast pump according to claim **34** further including a timer for determining the time duration between when passing of milk is detected by said first sensing unit and when passing of milk is detected by said second IR unit.

36. A breast pump according to claim **28** wherein IR signals transmitted by said IR transmitter are prevented from being received by said IR receiver upon passing of milk therebetween.

37. A breast pump according to claim **36** wherein said first motor is adapted to stop operation when IR signals transmitted by said IR transmitter are prevented from being received by said IR receiver for a predetermined period of time.

38. A breast pump according to claim **28** wherein said first valve is a one-way valve.

39. A breast pump according to claim **28** wherein said chamber has at least a first opening and a closure member which is movable by said first motor between a first position to close said first opening and a second position in which said opening is open, and wherein said closure member remains at said first position when said first motor is in operation and remains at said second position when said first motor is not in operation.

40. A breast pump according to claim **39** wherein said closure member is biased towards said second position.

41. A breast pump according to claim **40** wherein said closure member is biased towards said second position by a spring member.

42. A breast pump according to claim **39** wherein said first motor is engaged with said closure member via at least one ring-shaped structure.

43. A breast pump according to claim **42** wherein said ring-shaped structure is movable between a stable first configuration to which said ring-shaped structure is biased and a second configuration in which said closure member is allowed to occupy said first position.

44. A breast pump according to claim **43** wherein said ring-shaped structure is at said stable first configuration when said first motor is not in operation and at said second configuration when said first motor is in operation.

45. A breast pump according to claim **44** wherein said ring-shaped structure rotates when said first motor is in operation.

46. A breast pump according to claim **45** wherein said ring-shaped structure moves from said first configuration to said second configuration by centrifugal force when said ring-shaped structure rotates.

47. A breast pump according to claim **39** further including a second motor for selectively opening or closing said second valve.

48. A breast pump according to claim **28** wherein said first chamber includes at least a second opening closable by a third valve.

49. A breast pump according to claim **48** wherein said third valve is a one-way valve.

50. A breast pump according to claim **49** wherein said third valve only allows air to exit said chamber.

51. A breast pump according to claim **28** further including an adjustment member manually operable to adjust the air pressure in said hood member.

52. A breast pump according to claim **51** wherein said adjustment member includes a fourth valve member in air communication with said hood member.

53. A breast pump according to claim **52** wherein said adjustment member further includes a wheel member manually operable to adjust the amount of air allowed to enter the fourth valve.

54. An electric breast pump including:

at least one hood member adapted to be fitted over a breast of a user;

a chamber in air communication with said hood member via a first valve;

a first motor;

a pumping member movable by said first motor to draw air from said hood member into said chamber via said first valve;

a milk-receiving bottle in liquid communication with said hood member; and

a second valve in air communication with said bottle; and

a second motor for selectively opening or closing said second valve

wherein said chamber has at least a first opening and a closure member which is movable by said first motor between a first position to close said first opening and a second position in which said first opening is open; and

wherein said closure member is at said first position when said first motor is in operation and is at said second position when said first motor is not in operation.

* * * * *