US 20060132382A1

(19) United States

(12) Patent Application Publication

Jannard

(10) Pub. No.: US 2006/0132382 A1

(43) Pub. Date: Jun. 22, 2006

(54) DATA INPUT MANAGEMENT SYSTEM FOR WEARABLE ELECTRONICALLY ENABLED INTERFACE

(76) Inventor: **James H. Jannard**, Eastsound, WA (US)

Correspondence Address:
KNOBBE MARTENS OLSON & BEAR LLP
2040 MAIN STREET
FOURTEENTH FLOOR
IRVINE, CA 92614 (US)

(21) Appl. No.: 11/022,367

(22) Filed: Dec. 22, 2004

Publication Classification

(51) Int. Cl.
G09G 5/00 (2006.01)

(52) U.S. Cl. 345/8

(57) ABSTRACT

A data input management system is disclosed, for allowing a user to select one or more data sources, to be placed either simultaneously or one at a time into electrical communication with a single user interface. The user interface may comprise a wearable support, such as an eyeglass frame, adapted to carry one or more of speakers, microphone and video display, depending upon the desired functionality. Source electronics may be carried by the support or carried remotely, and in wireless communication with the support using Bluetooth protocols or other data transmission technology.

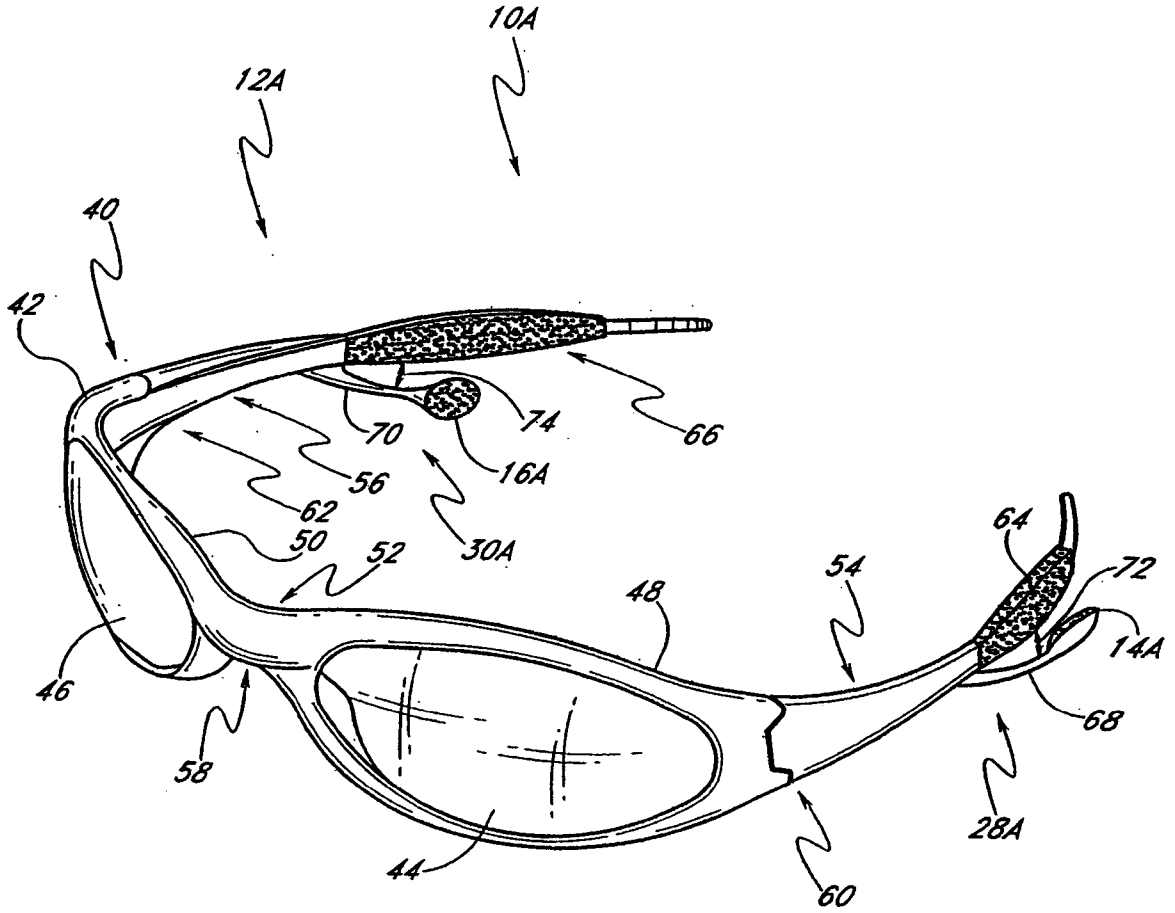

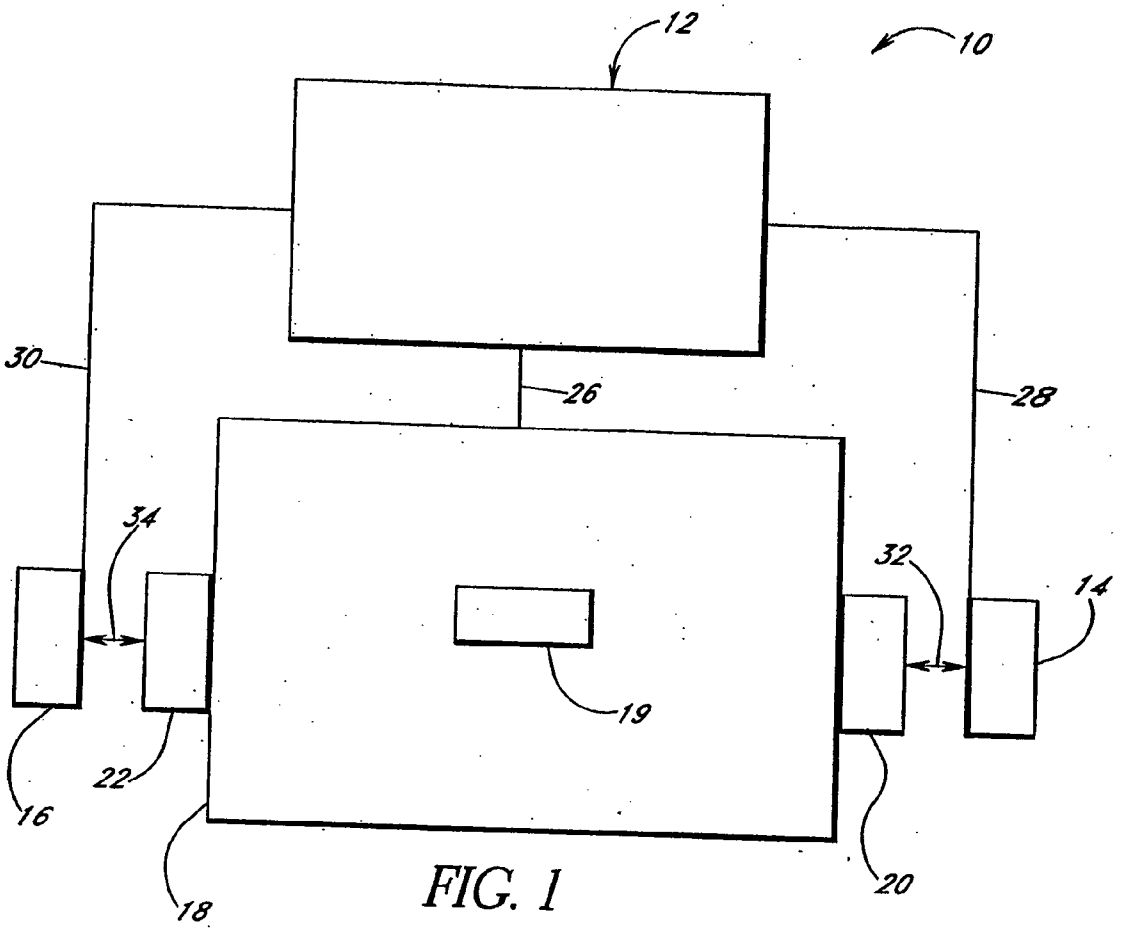

FIG. 1

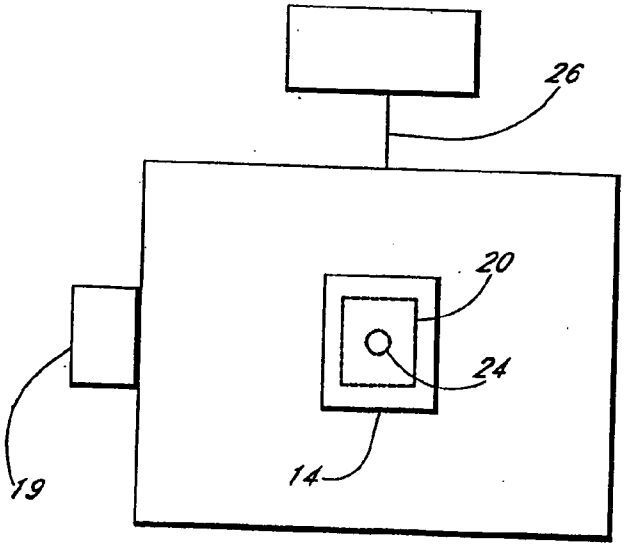

FIG. 2

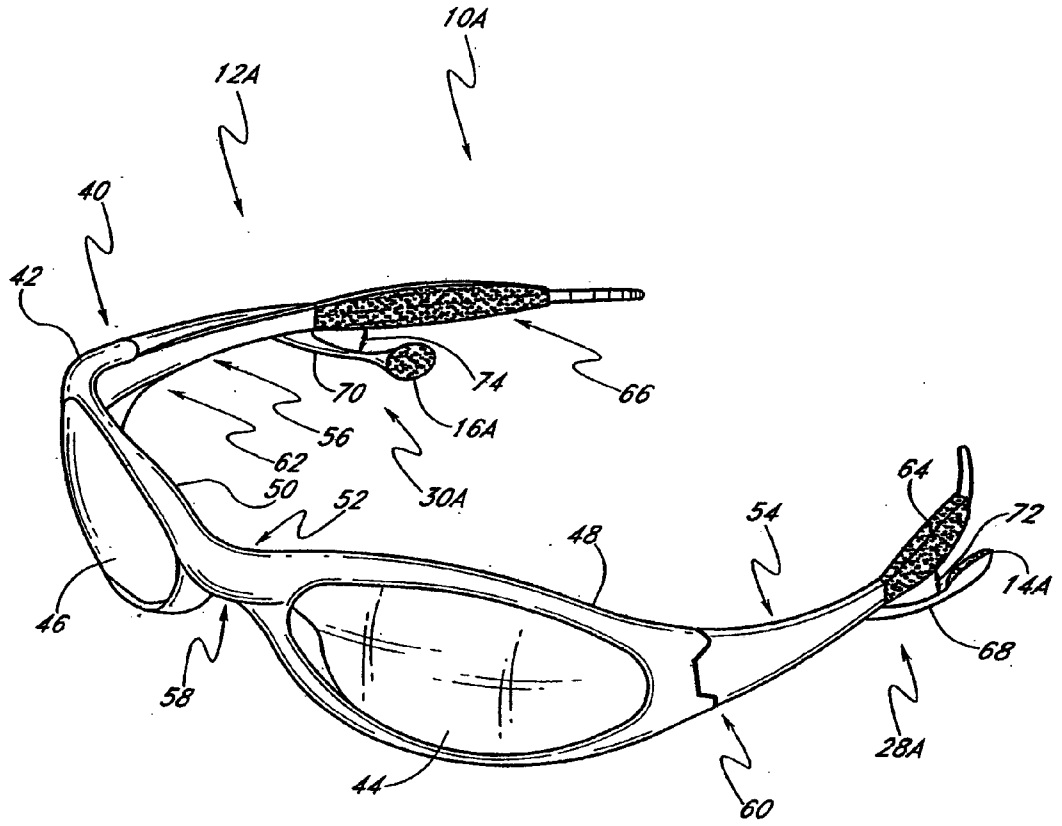
10A
12A
40
42
70
74
66
56
16A
62
30A
50
52
64
72
54
48
14A
46
68
58
28A
44
60

FIG. 3A

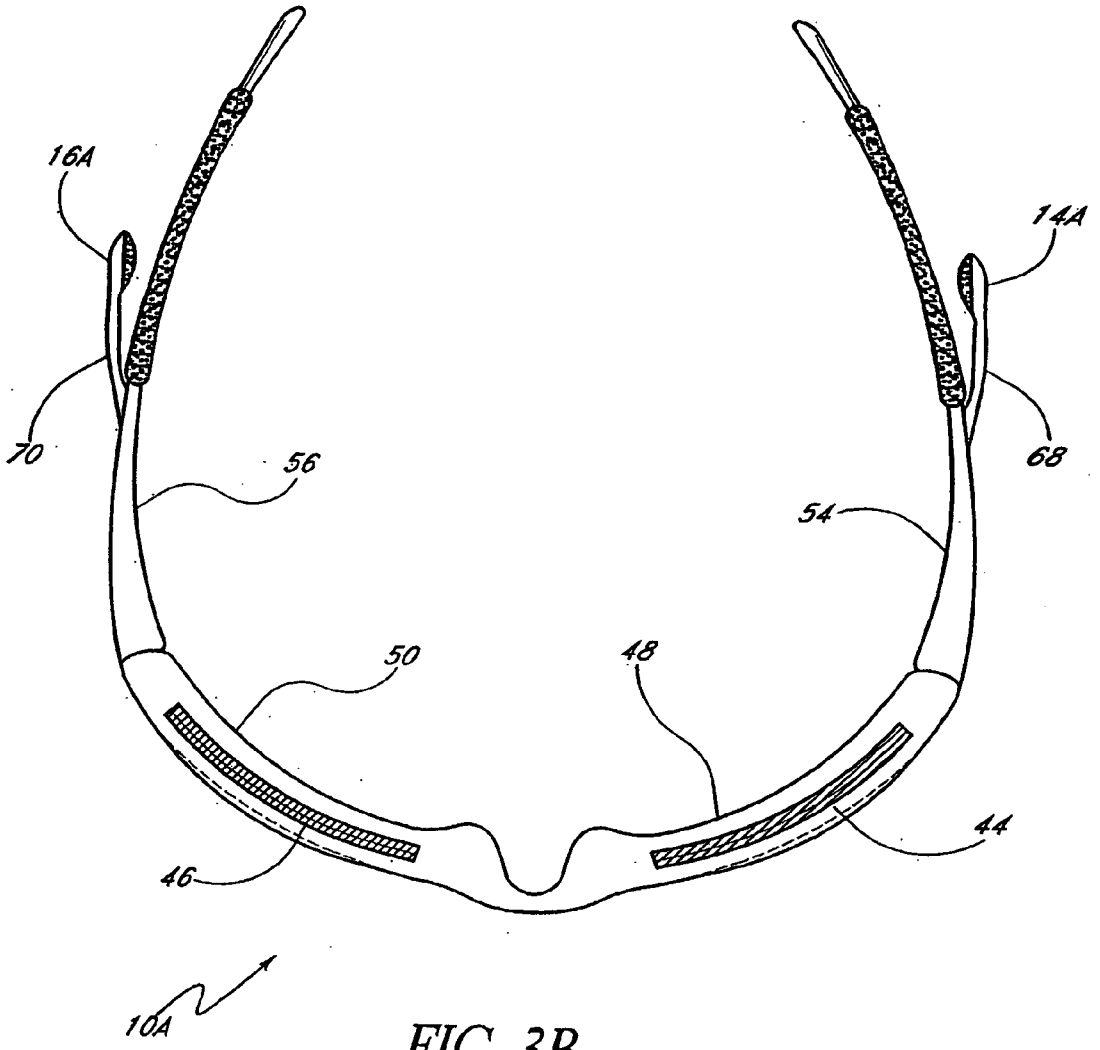

FIG. 3B

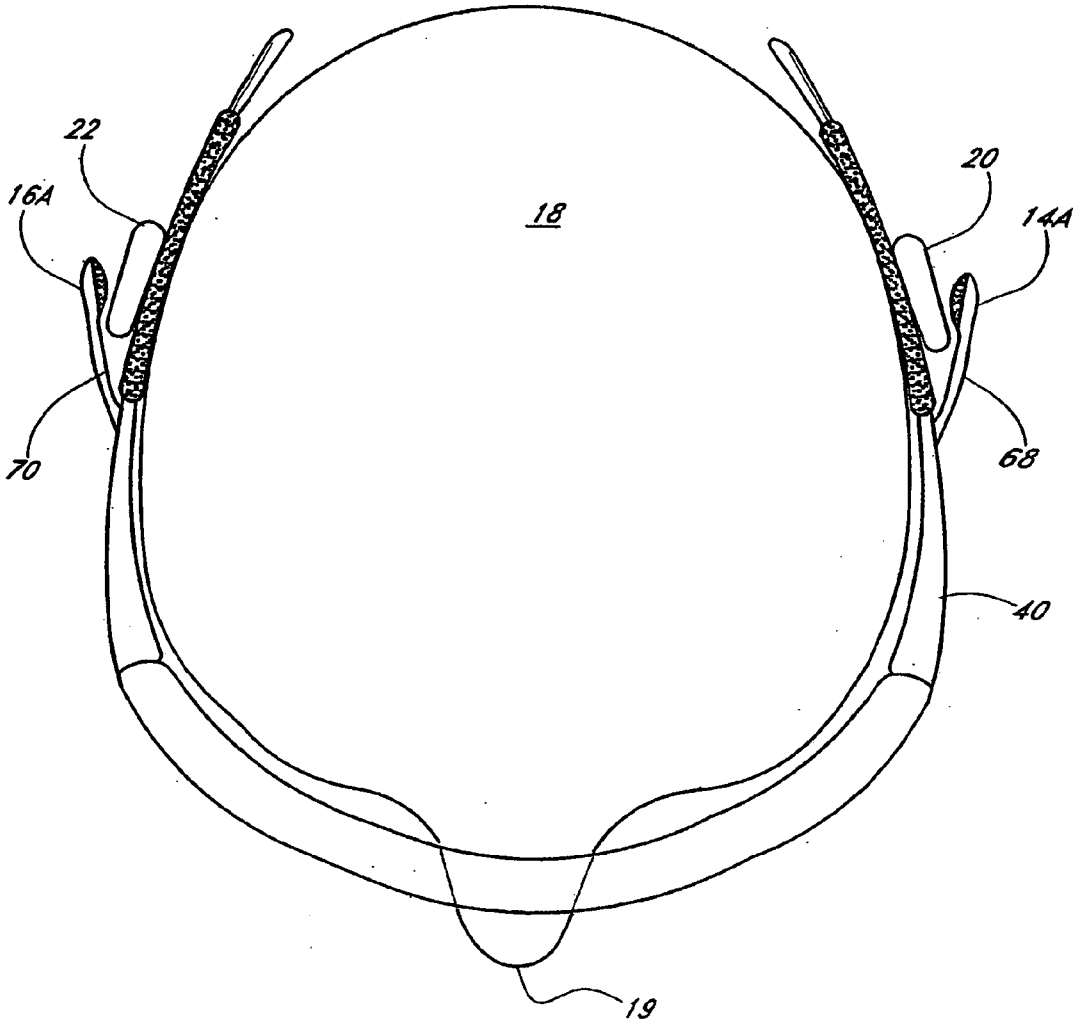

FIG. 3C

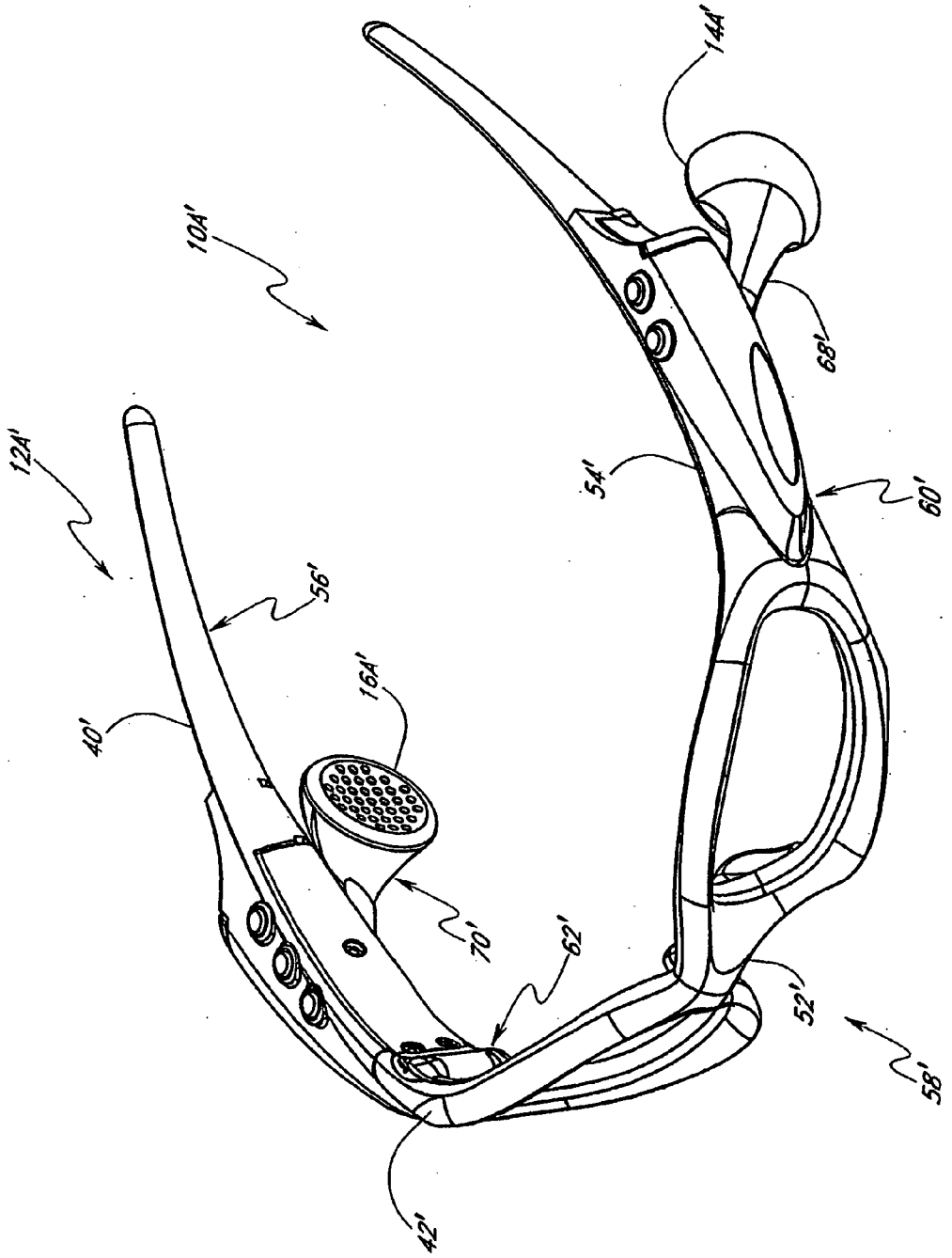

FIG. 3D

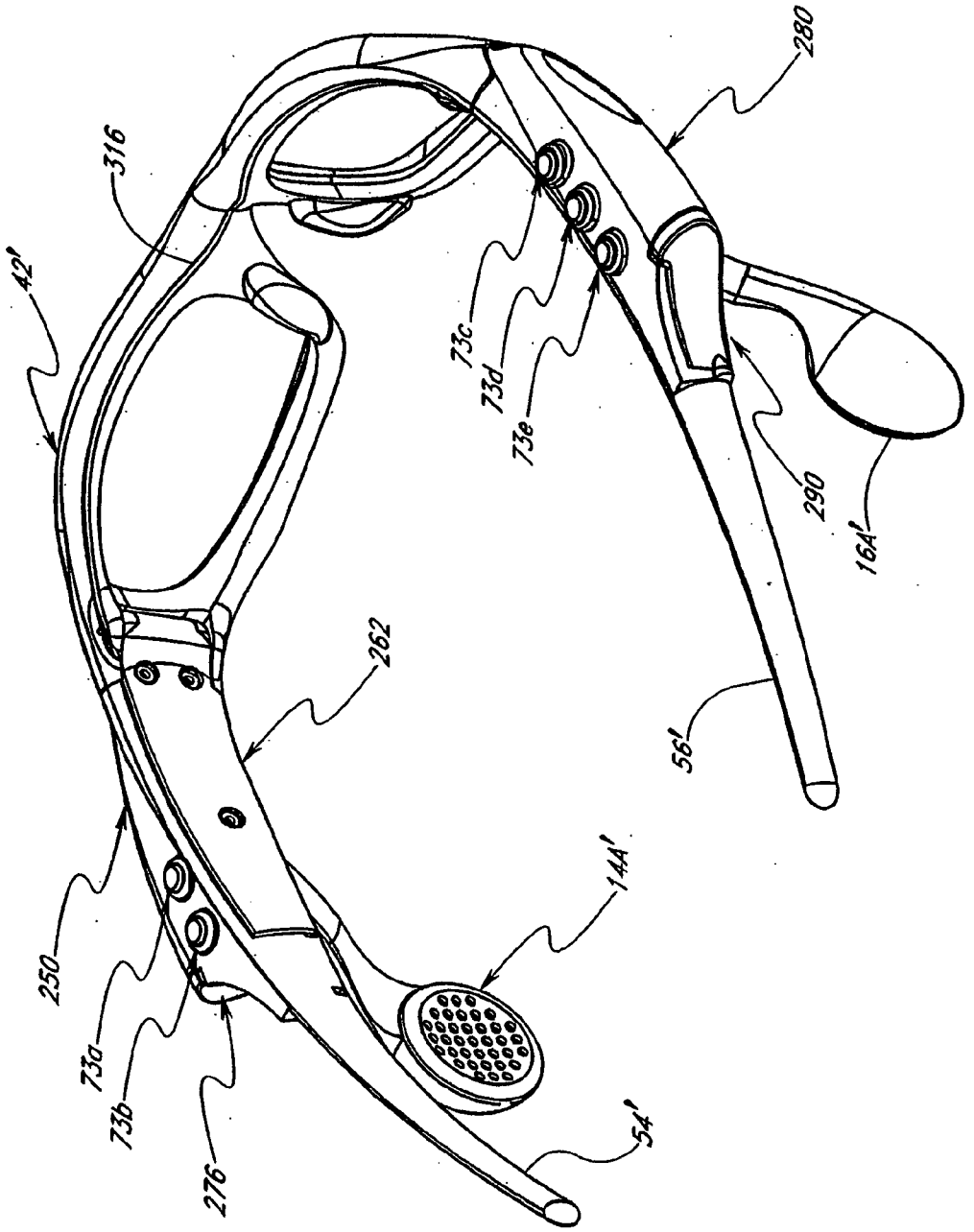

FIG. 3E

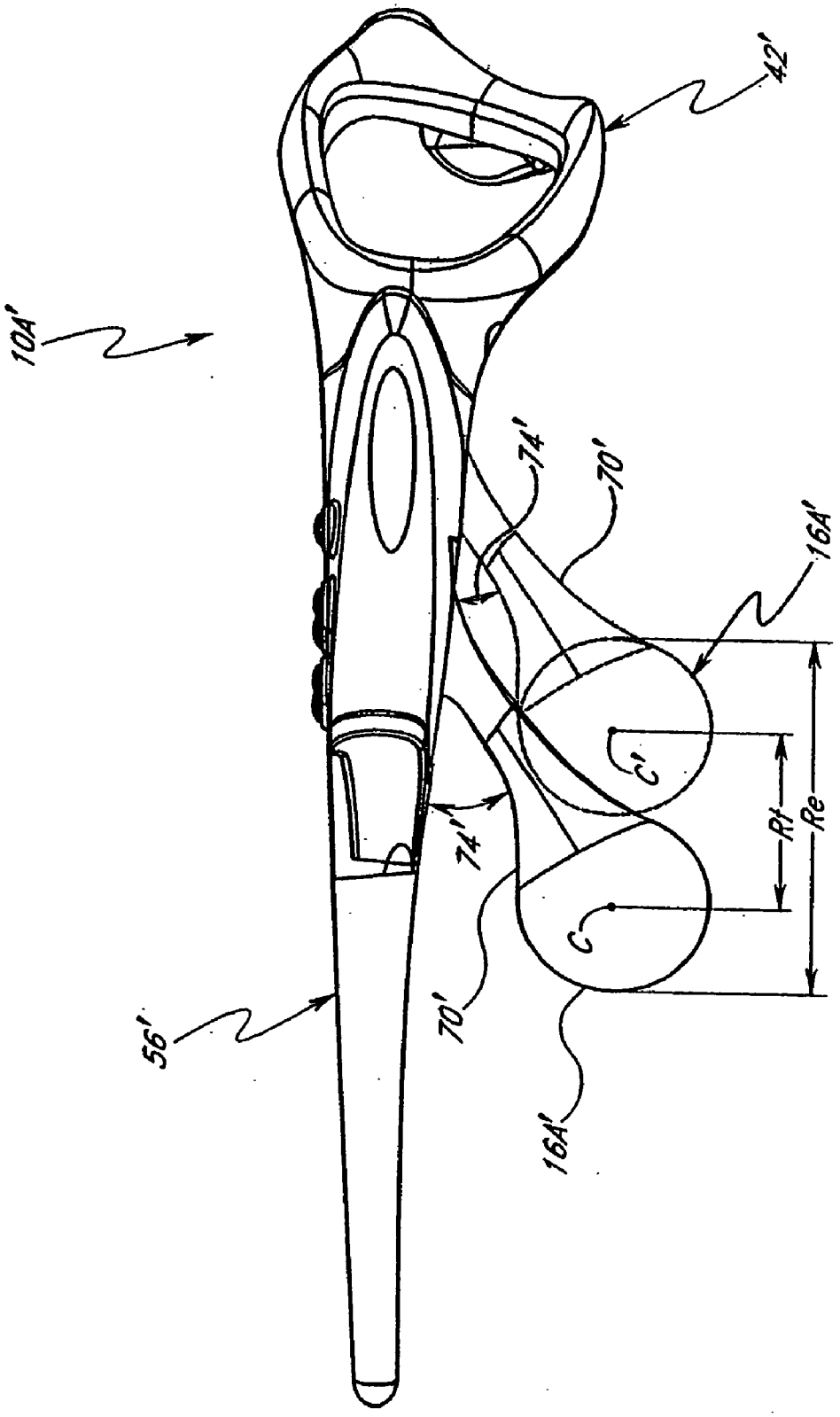

FIG. 3F

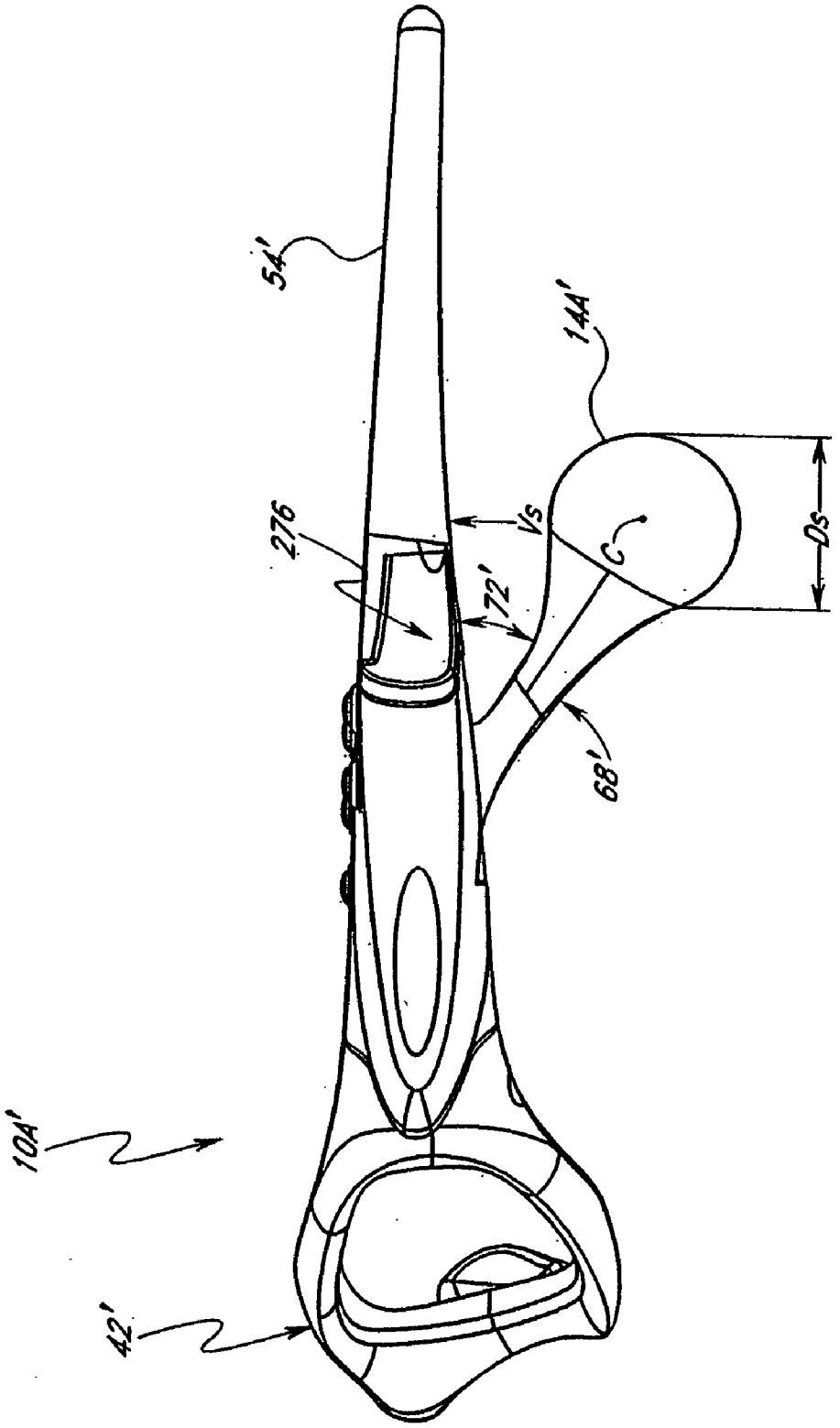

FIG. 3G

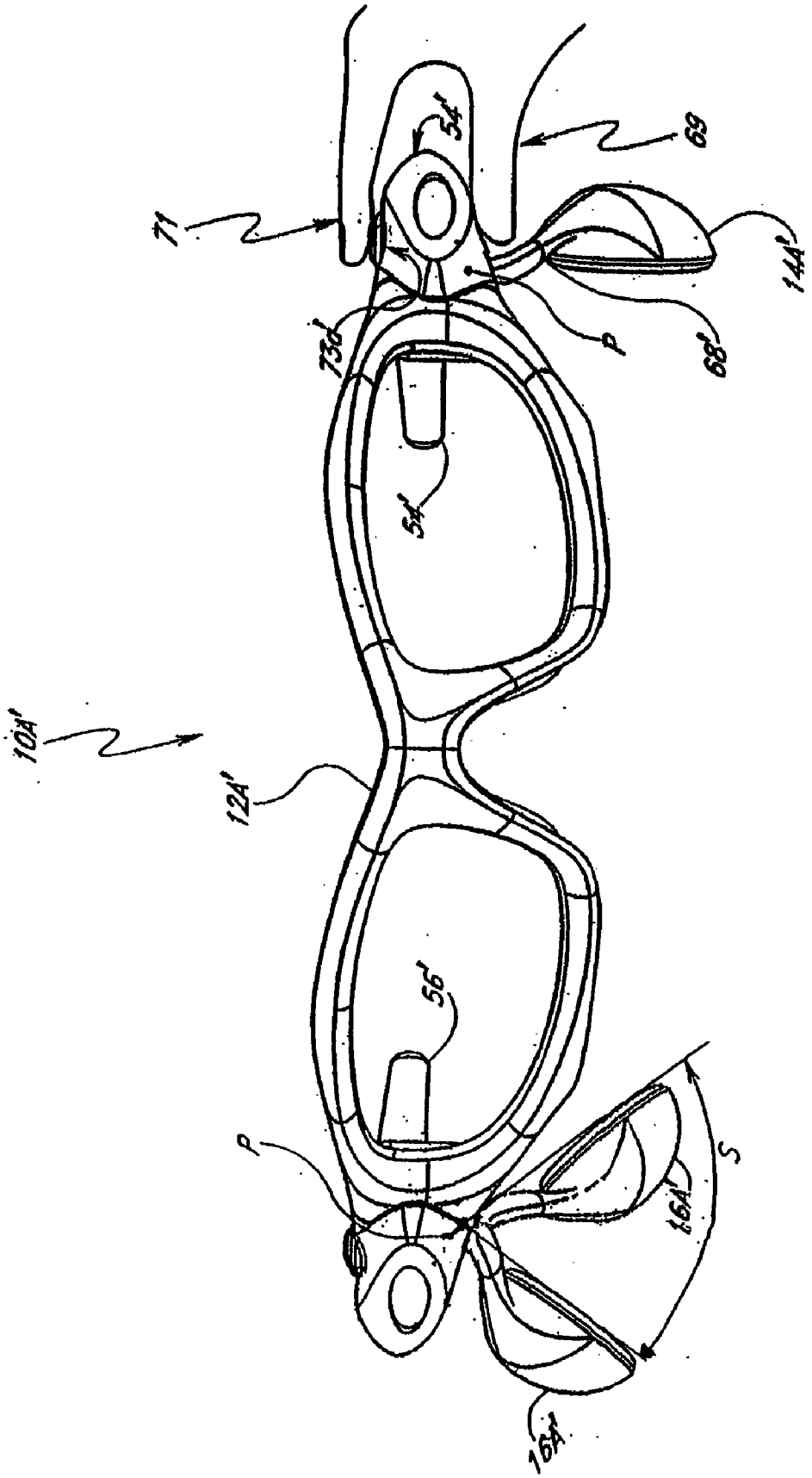

FIG. 3H

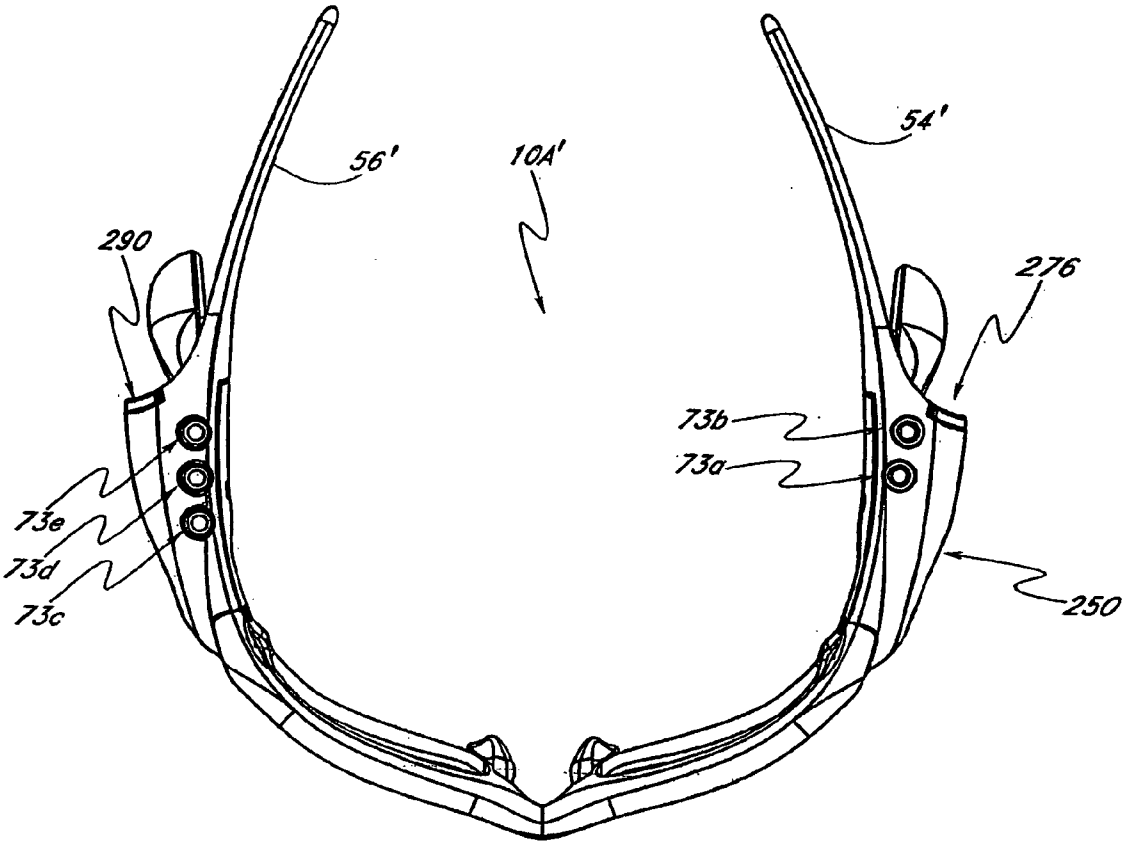

FIG. 3I

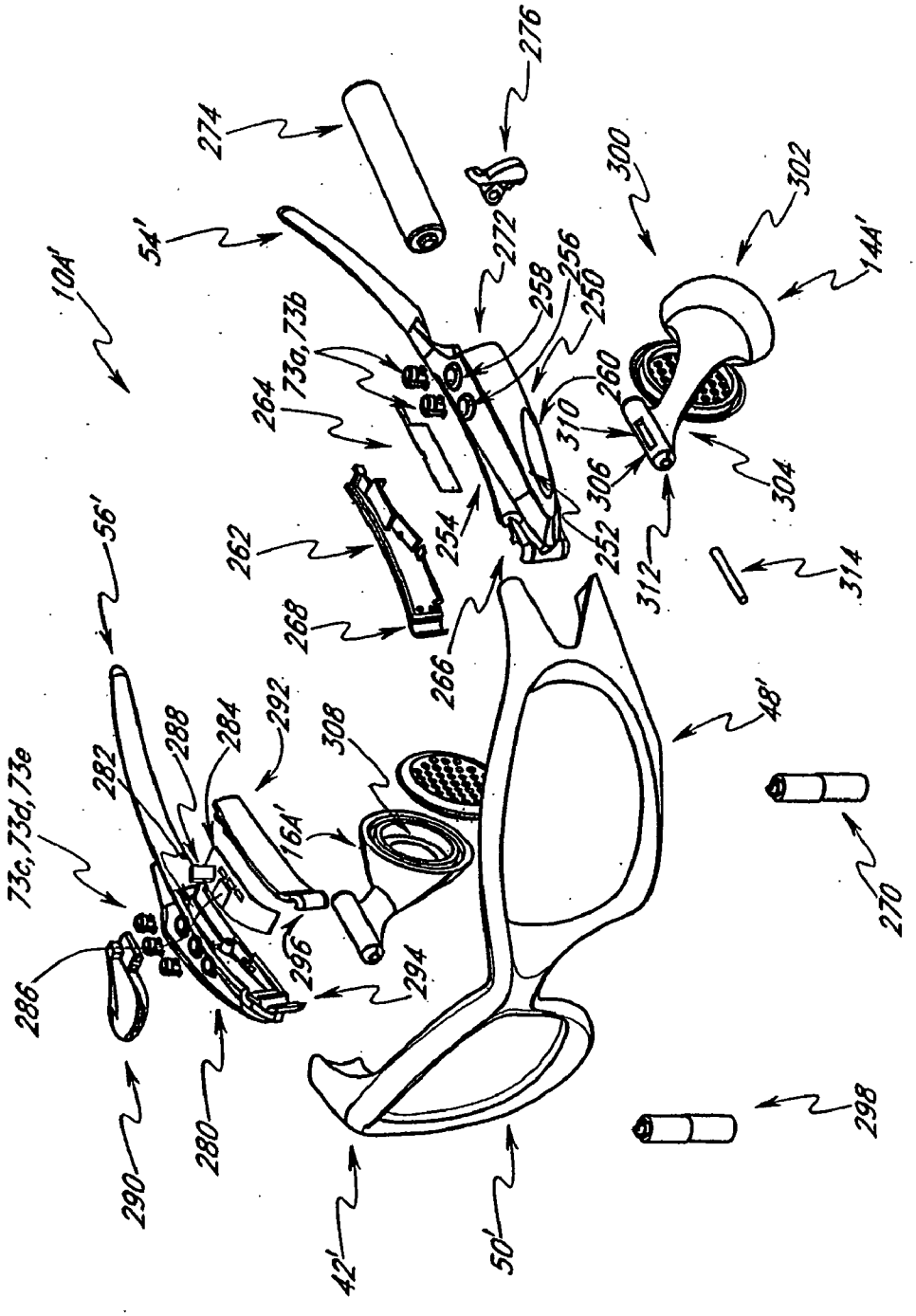
104'
54'
274
276
272
258
256
250
300
302
144'
73a,73b
264
260
310
306
304
56'
262
254
252
312
314
268
266
48'
73c,73d,73e
282
288
284
292
308
164'
286
296
294
270
290
280
298
42'
50'

FIG. 3J

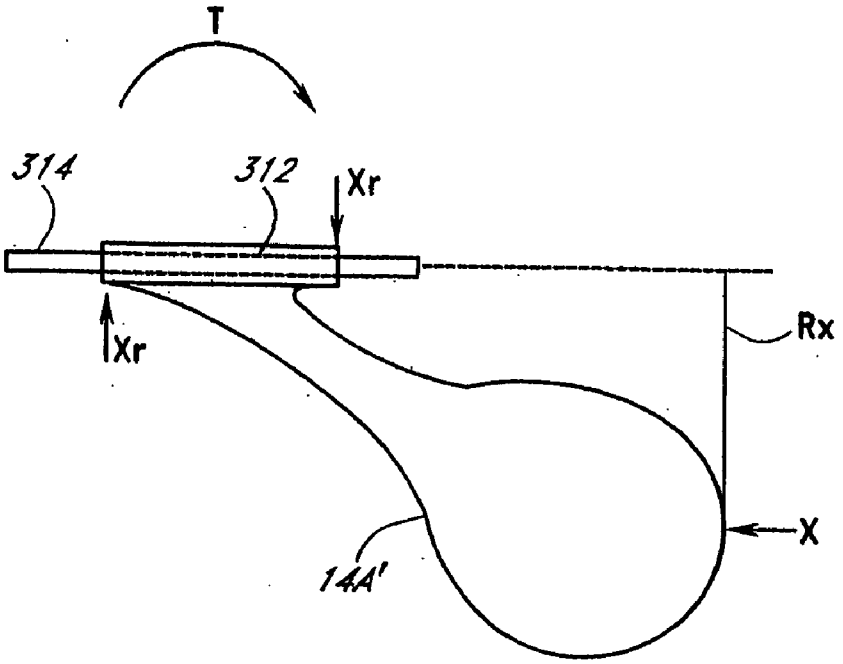

FIG. 3K

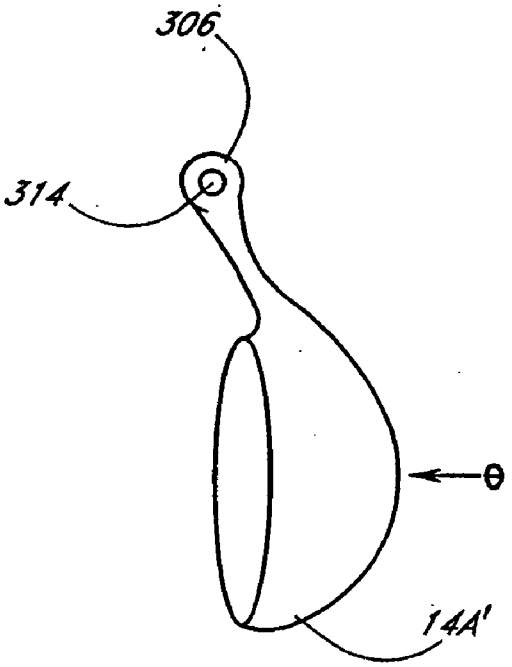

FIG. 3L

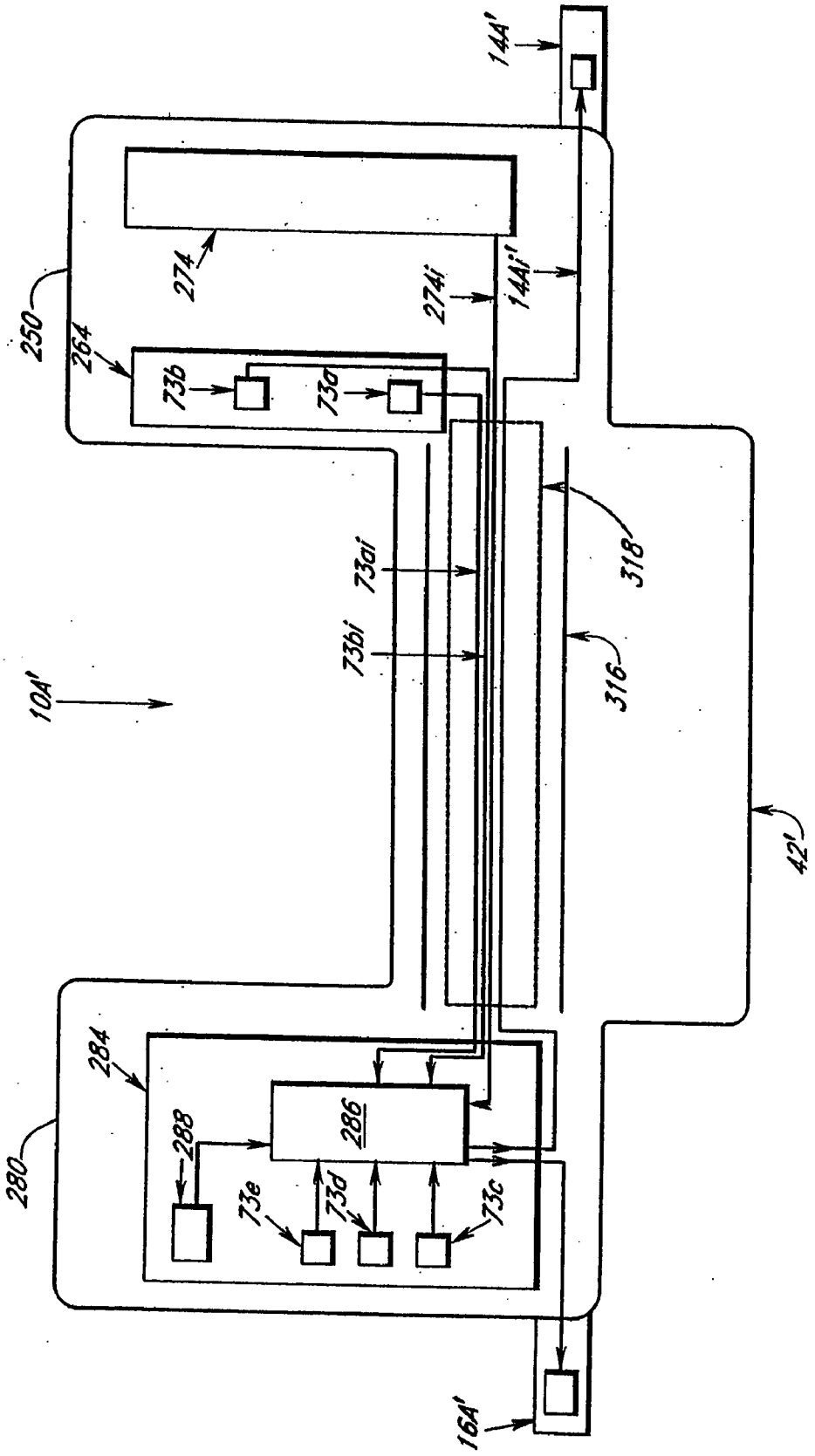
14A'
274
274i
14Ai'
250
264
73b
73a
73ai
73bi
318
316
10A'
42'
284
286
288
280
73e
73d
73c
16A'

FIG. 3M

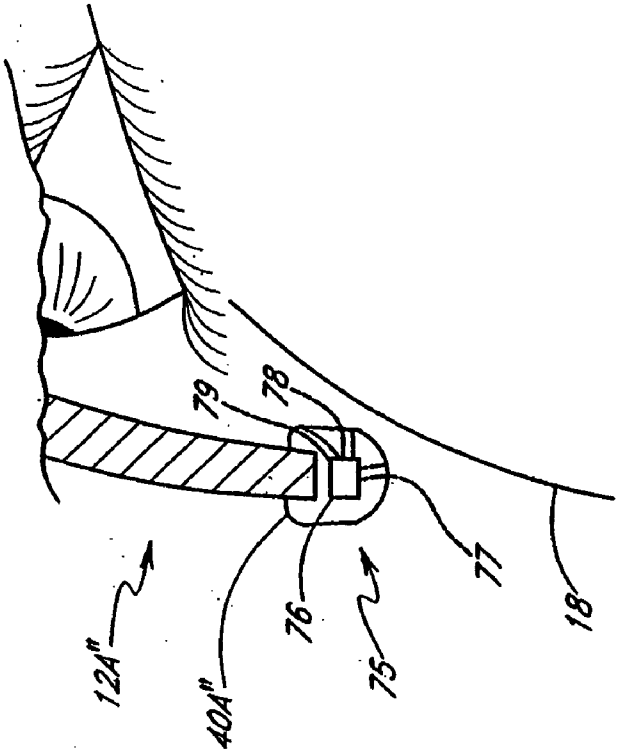

FIG. 4B

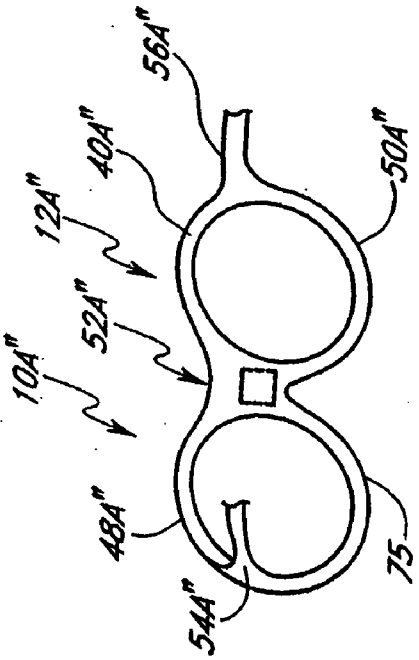

FIG. 4A

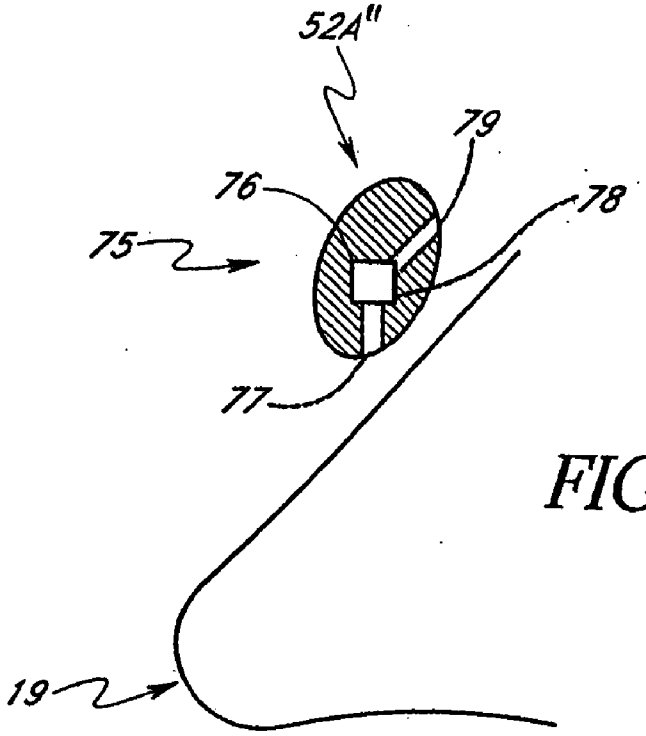

FIG. 5A

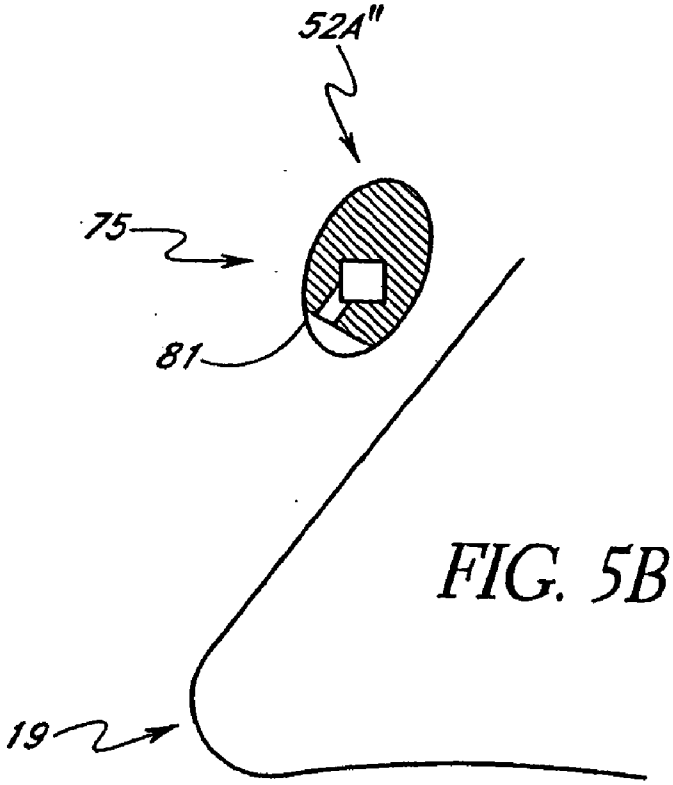

FIG. 5B

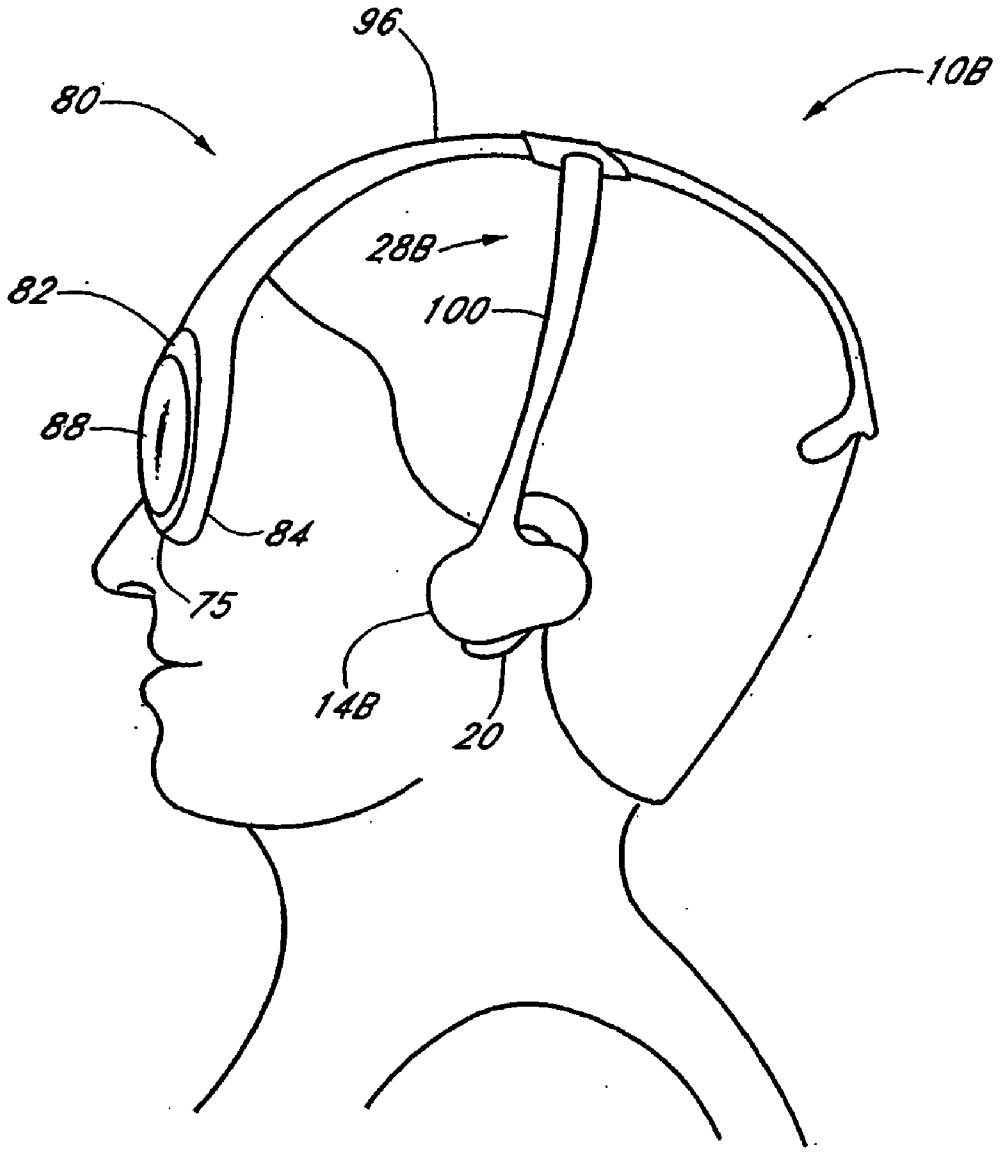

FIG. 6

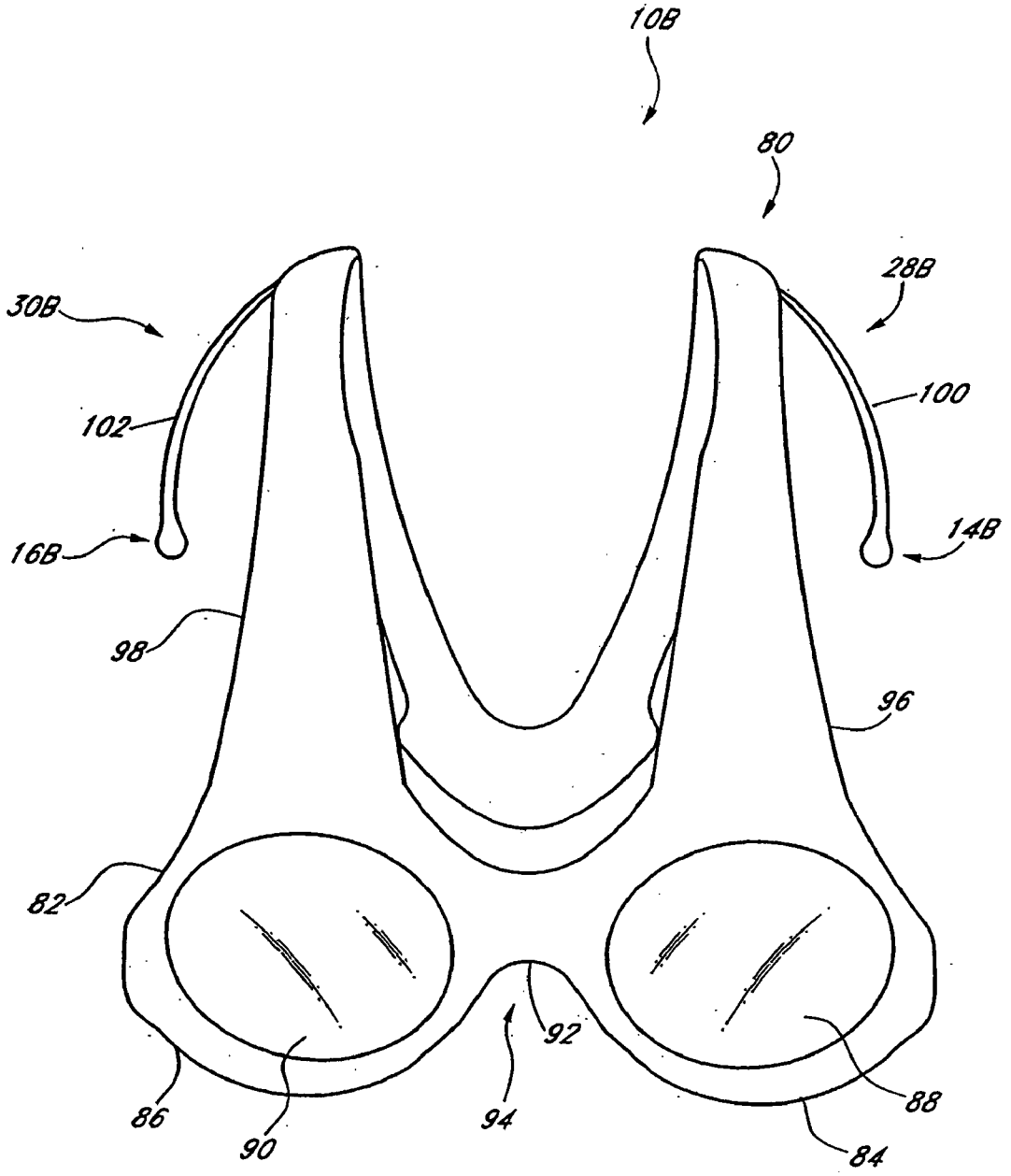

FIG. 7

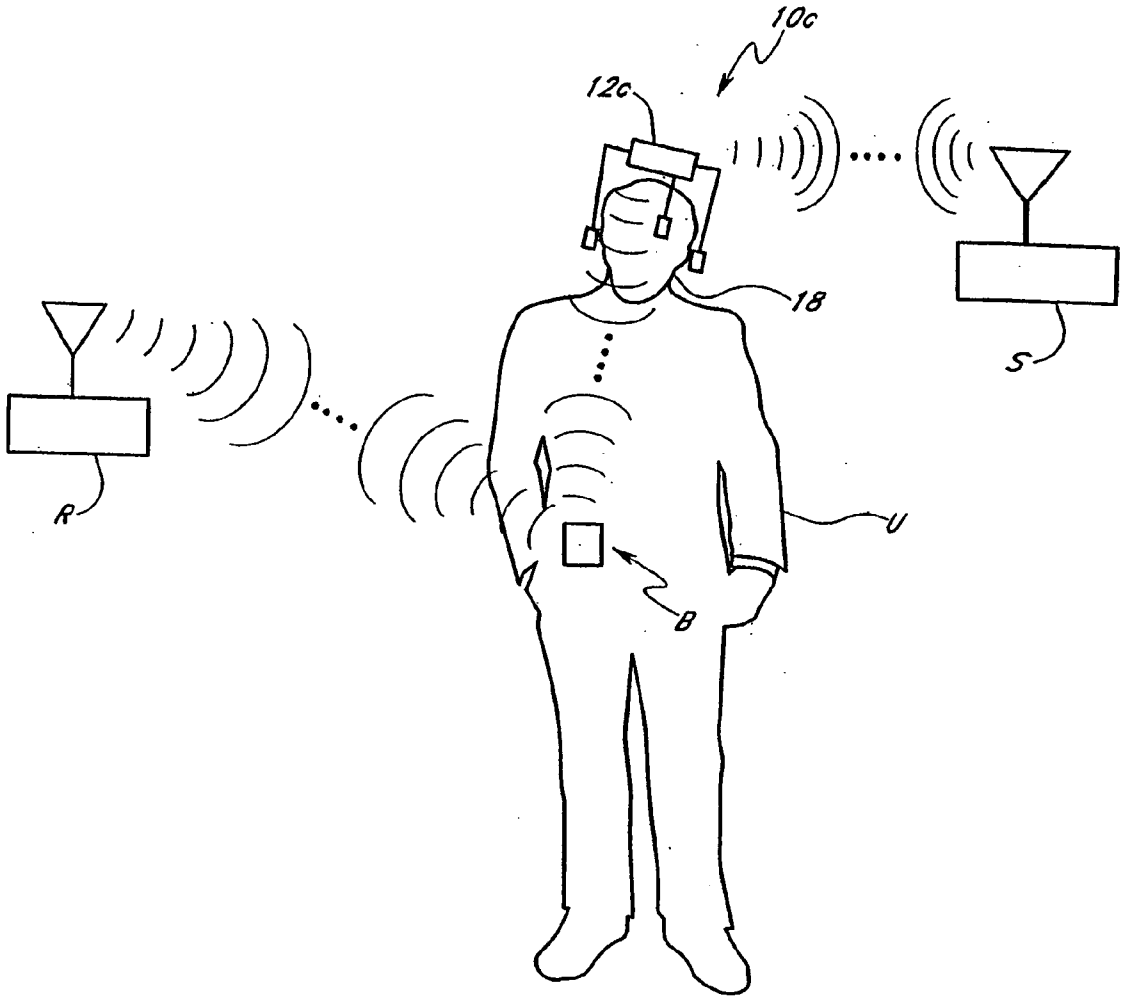

FIG. 8

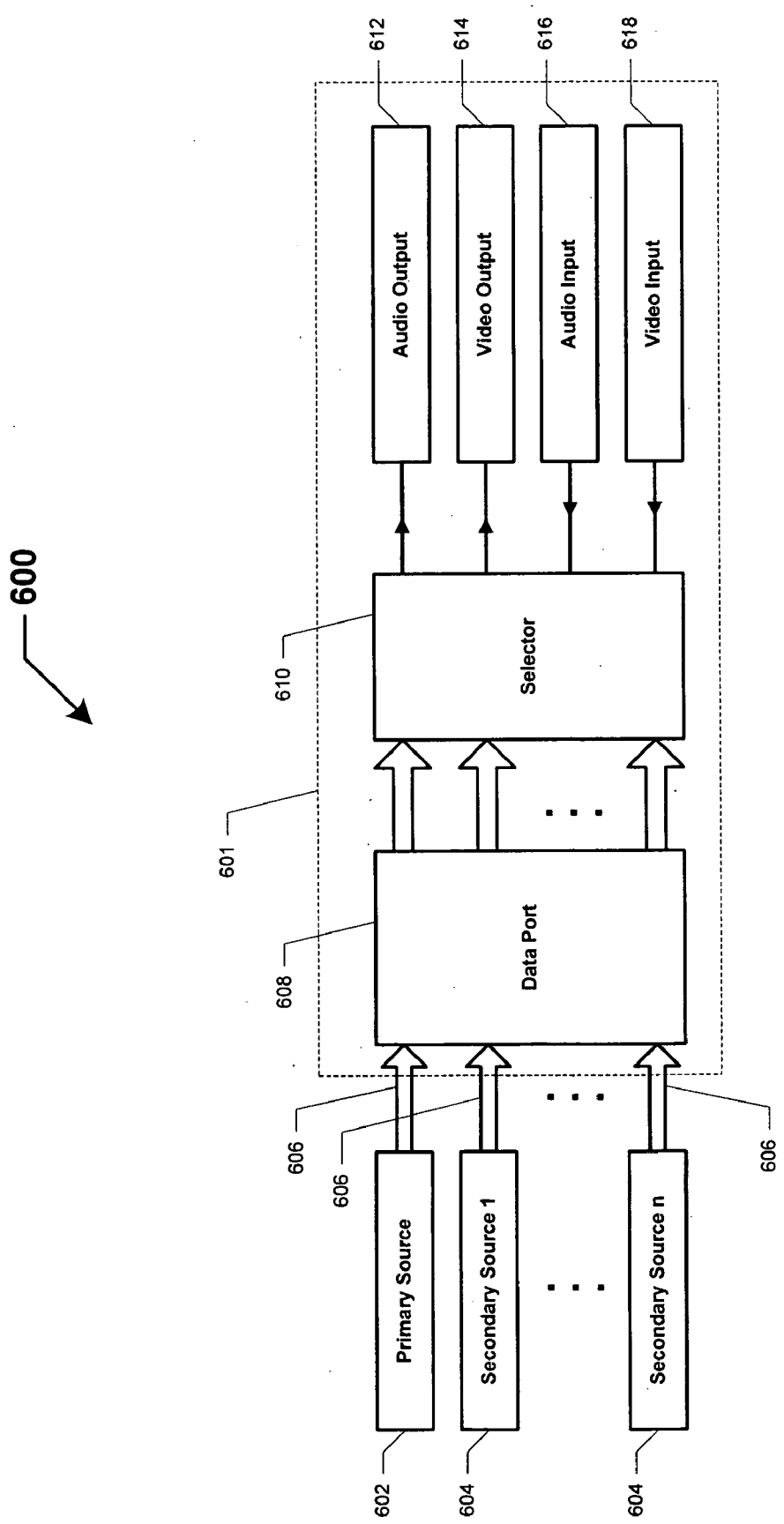
600
601
602
604
604
606
606
606
608
610
612
614
616
618
Primary Source
Secondary Source 1
Secondary Source n
Data Port
Selector
Audio Output
Video Output
Audio Input
Video Input

FIG. 8A

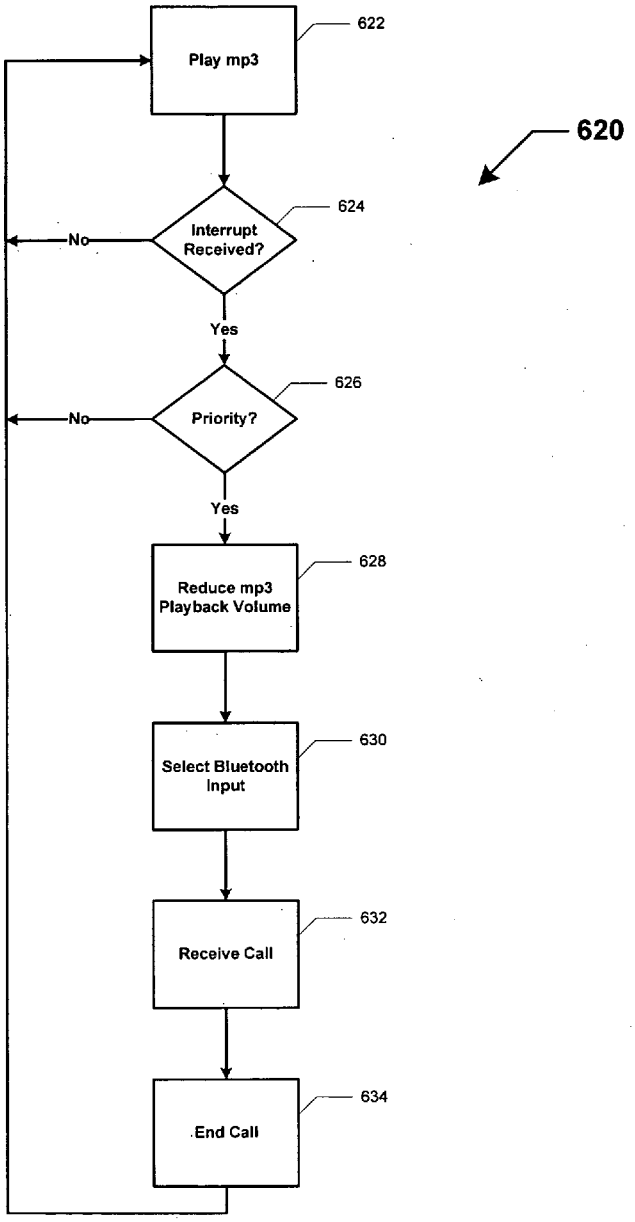
620
Play mp3
622
Interrupt Received?
624
No
Yes
Priority?
626
No
Yes
Reduce mp3 Playback Volume
628
Select Bluetooth Input
630
Receive Call
632
End Call
634

FIG. 8B

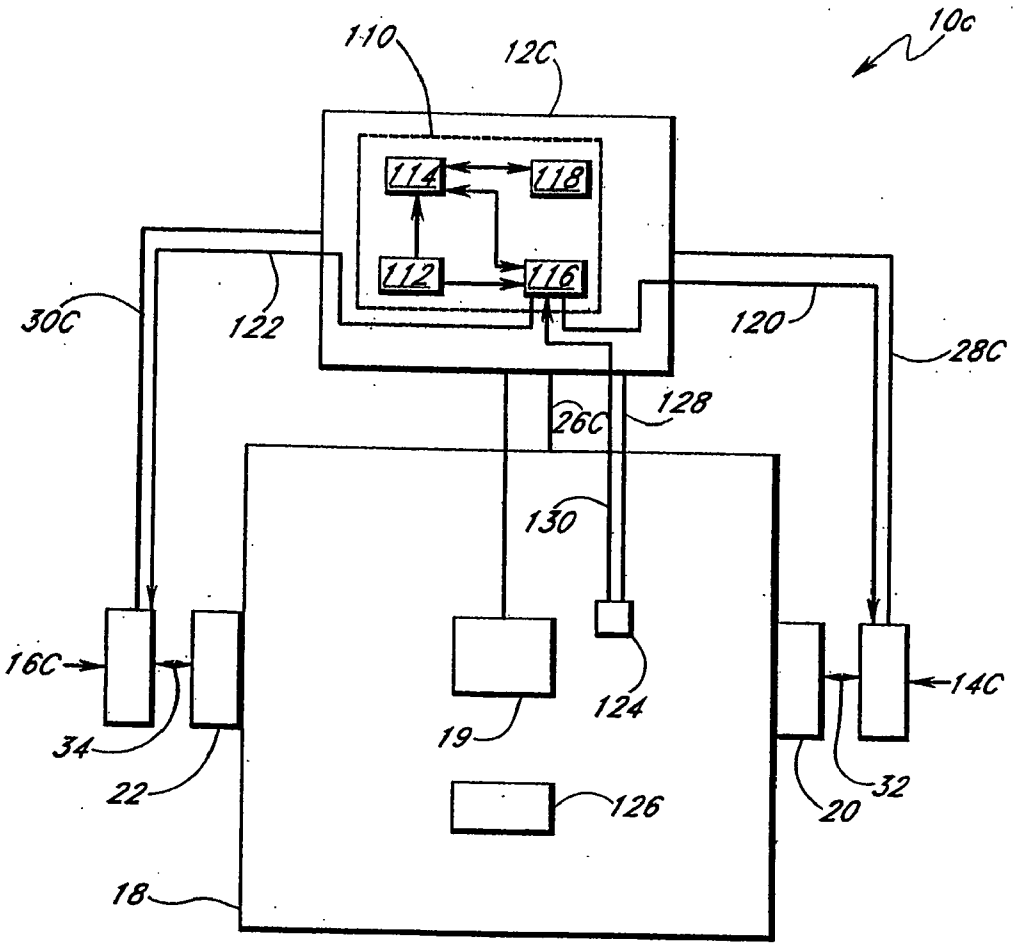
10c
110
12C
114
118
112
116
30C
122
120
28C
26C
128
130
16C
14C
124
19
34
22
20
32
126
18

FIG. 9A

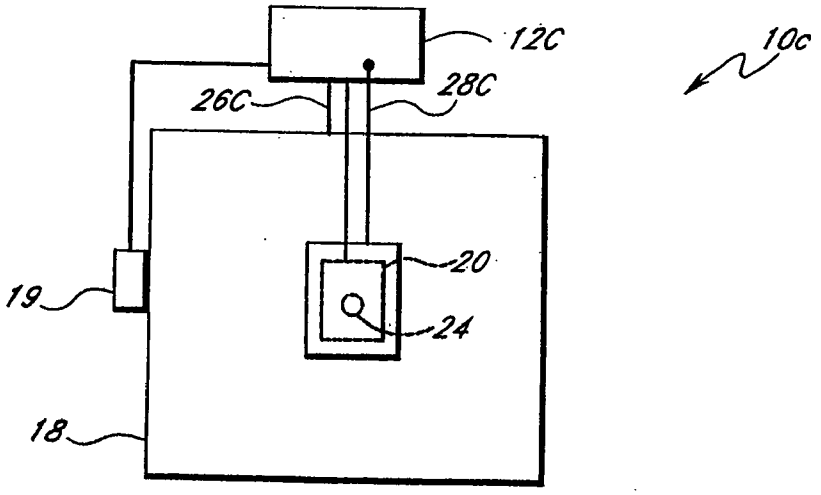
12C
10c
26C
28C
20
19
24
18

FIG. 9B

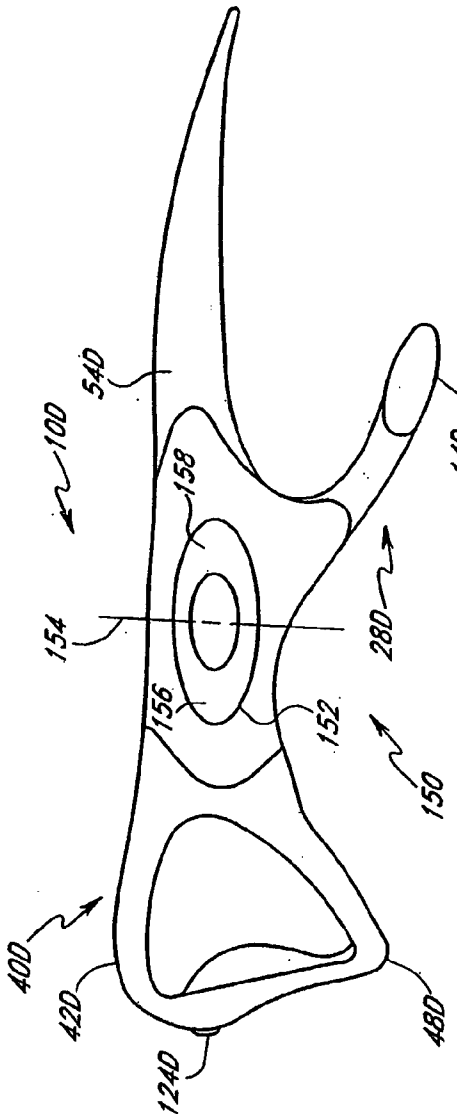
100
540
158
154
156
152
150
280
140
400
420
1240
480

FIG. 10

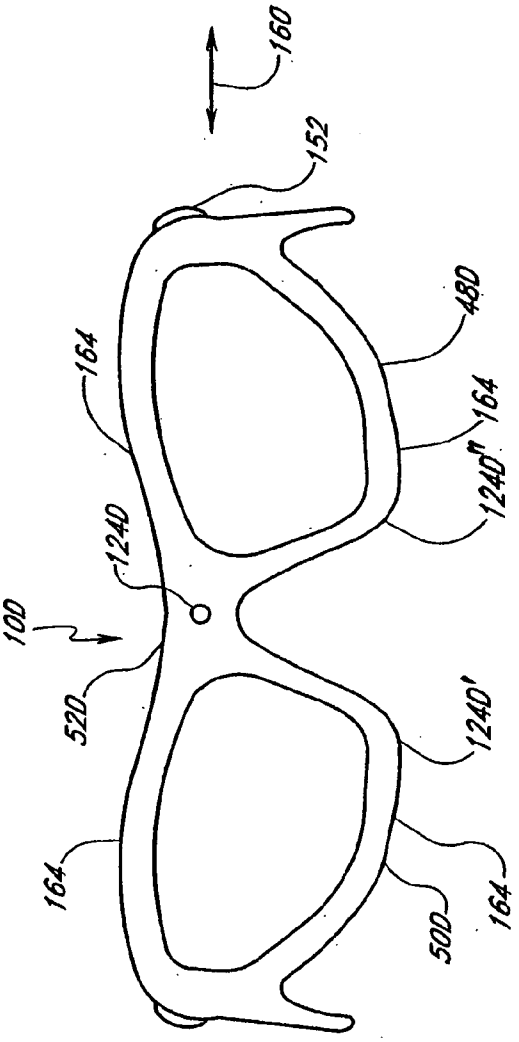
160
152
164
480
164
1240"
1240
100
520
1240'
164
500
164

FIG. 11

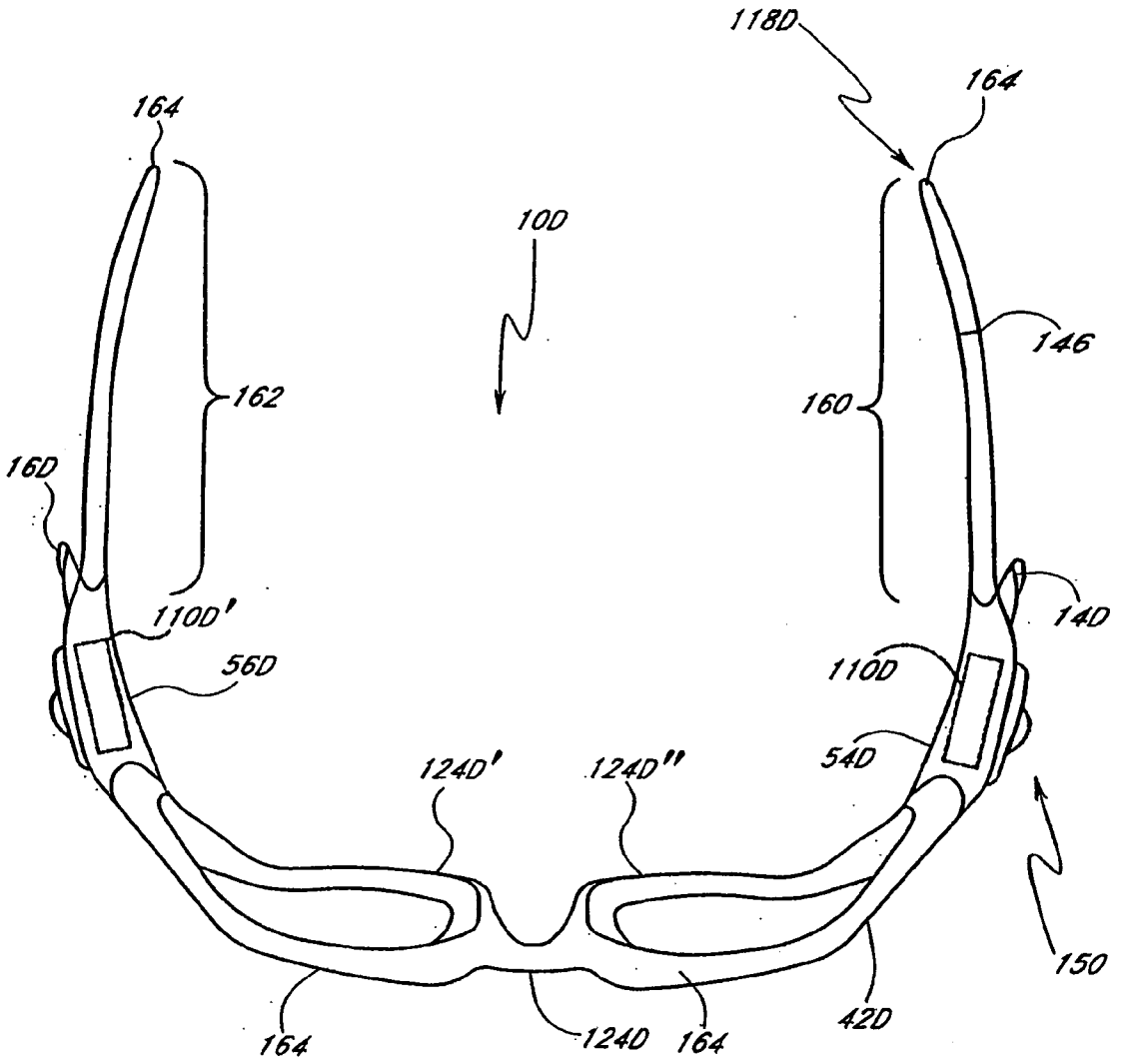
118D
164
164
10D
146
162
160
16D
14D
110D'
110D
56D
54D
124D'
124D''
150
42D
164
124D
164

FIG. 12

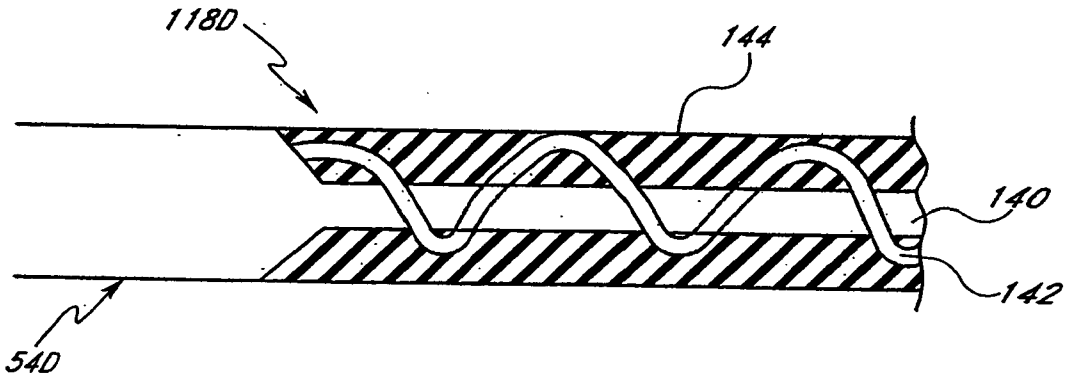

FIG. 13

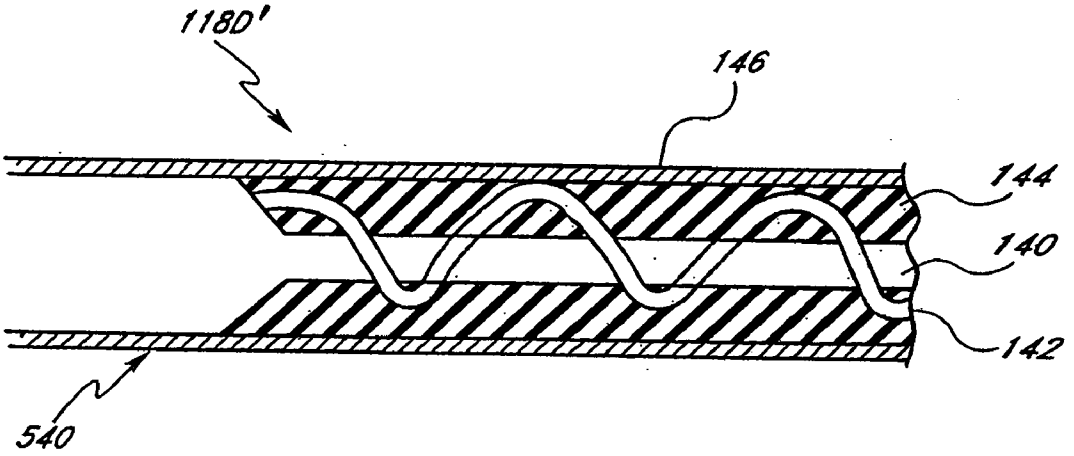

FIG. 14

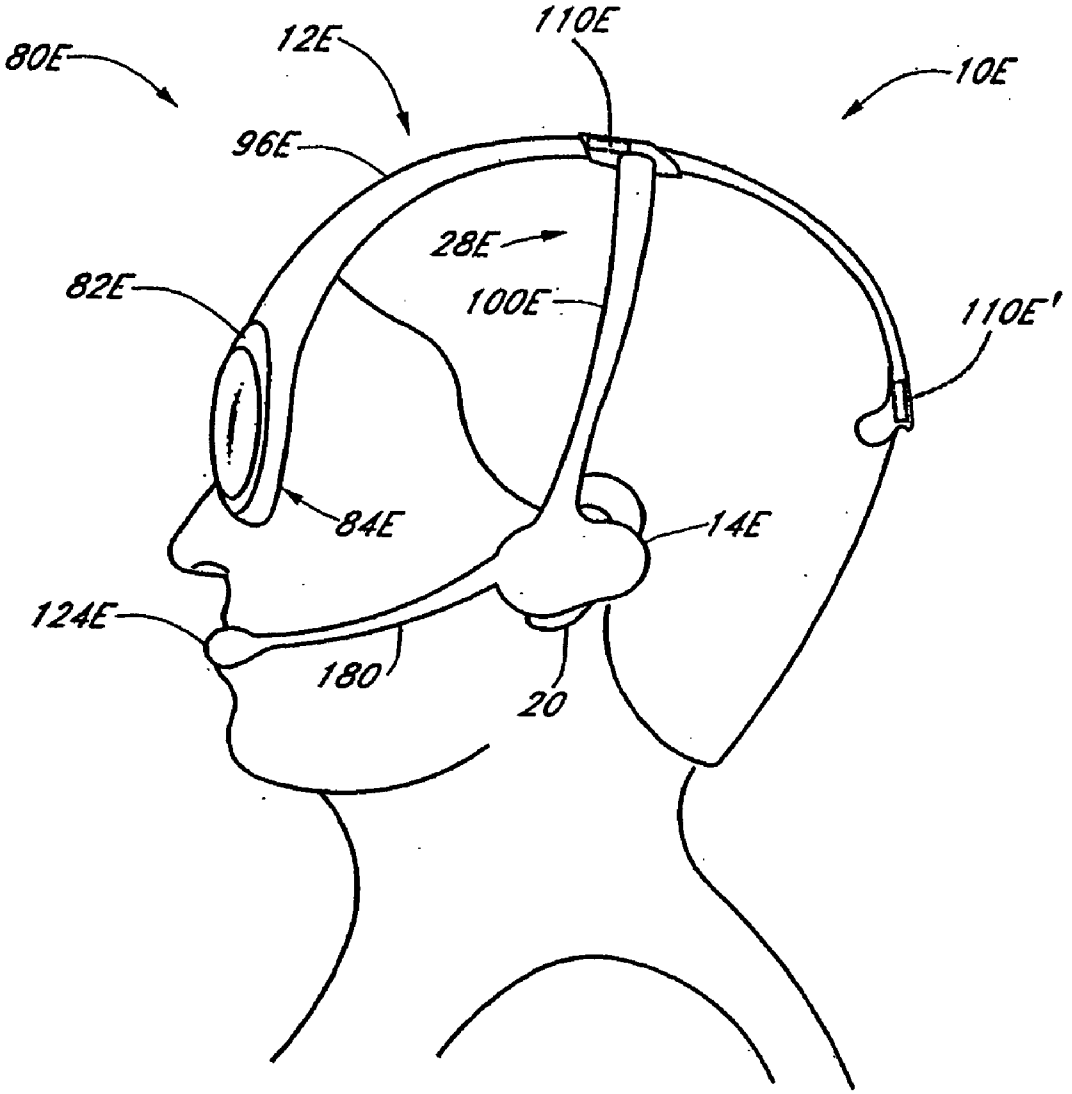

FIG. 15

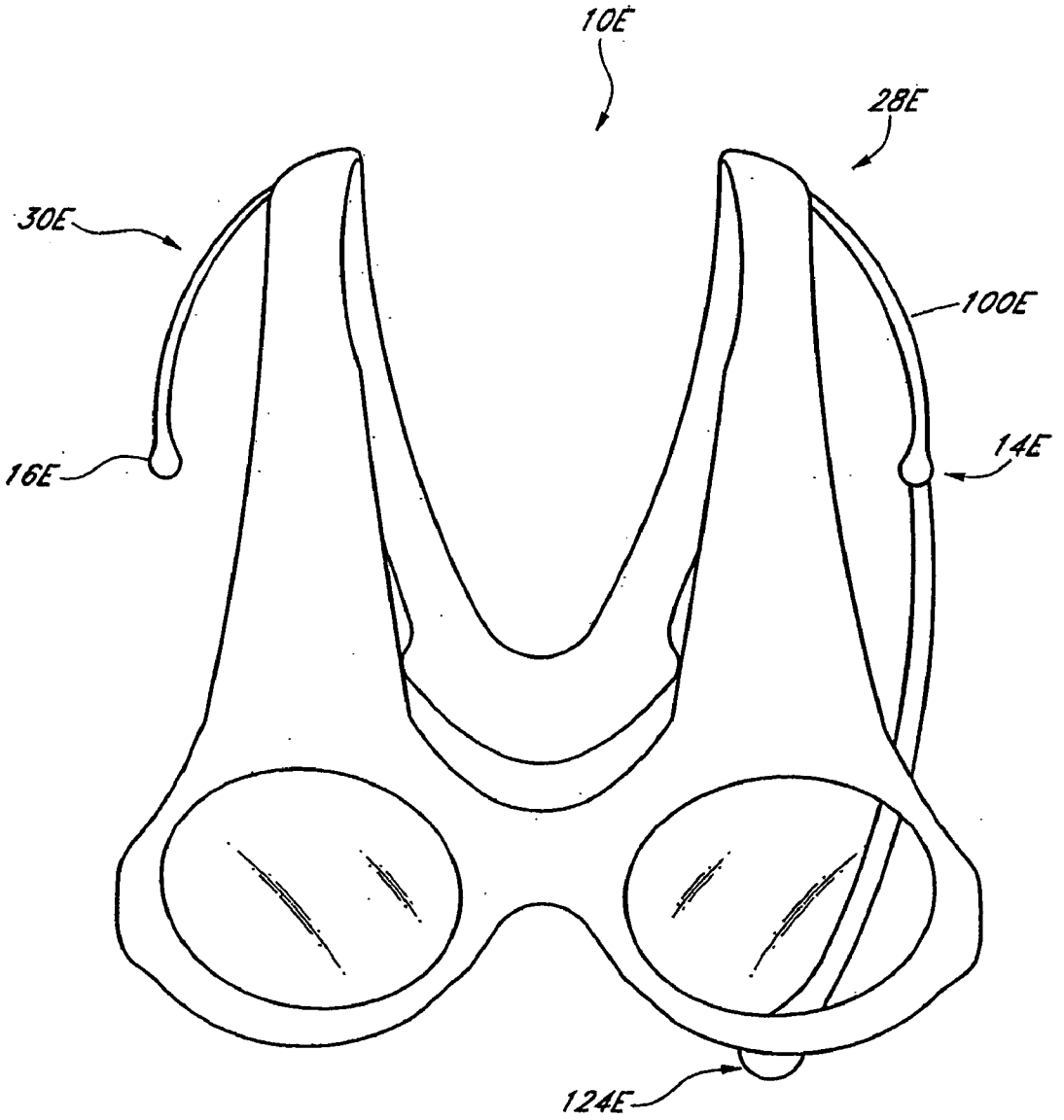

FIG. 16

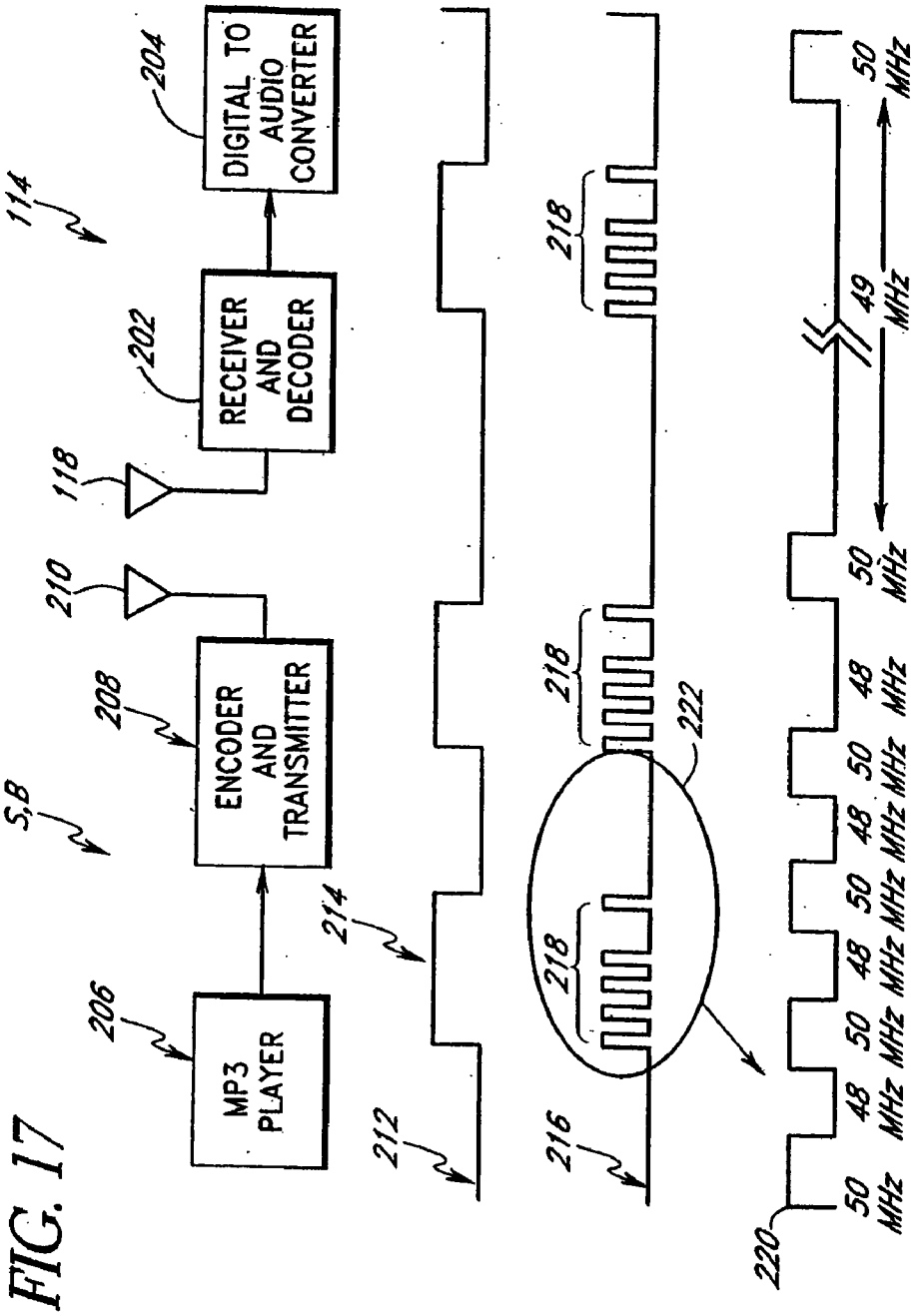
114
DIGITAL TO AUDIO CONVERTER
204
RECEIVER AND DECODER
202
118
210
ENCODER AND TRANSMITTER
208
S,B
MP3 PLAYER
206
214
212
218
216
222
220
50 MHz
49 MHz
50 MHz
48 MHz
50 MHz
48 MHz
50 MHz
48 MHz
50 MHz
48 MHz
50 MHz

FIG. 17

FIG. 18

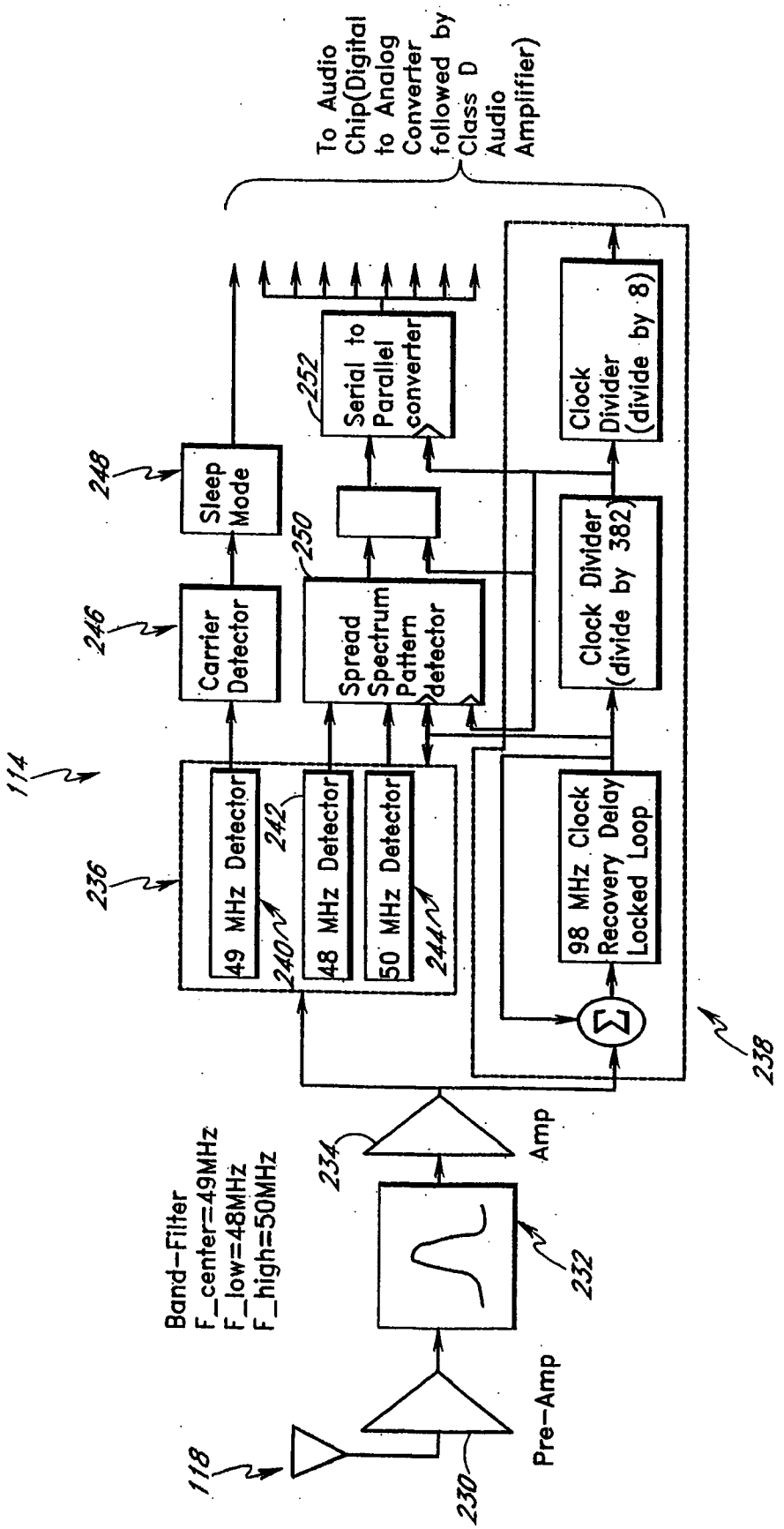
To Audio Chip(Digital to Analog Converter followed by Class D Audio Amplifier)
Sleep Mode
248
Serial to Parallel converter
252
Clock Divider (divide by 8)
Carrier Detector
246
Spread Spectrum Pattern detector
250
Clock Divider (divide by 382)
114
236
49 MHz Detector
240
48 MHz Detector
242
50 MHz Detector
244
98 MHz Clock Recovery Delay Locked Loop
238
Amp
234
Band-Filter
F_center=49MHz
F_low=48MHz
F_high=50MHz
232
Pre-Amp
230
118

FIG. 19

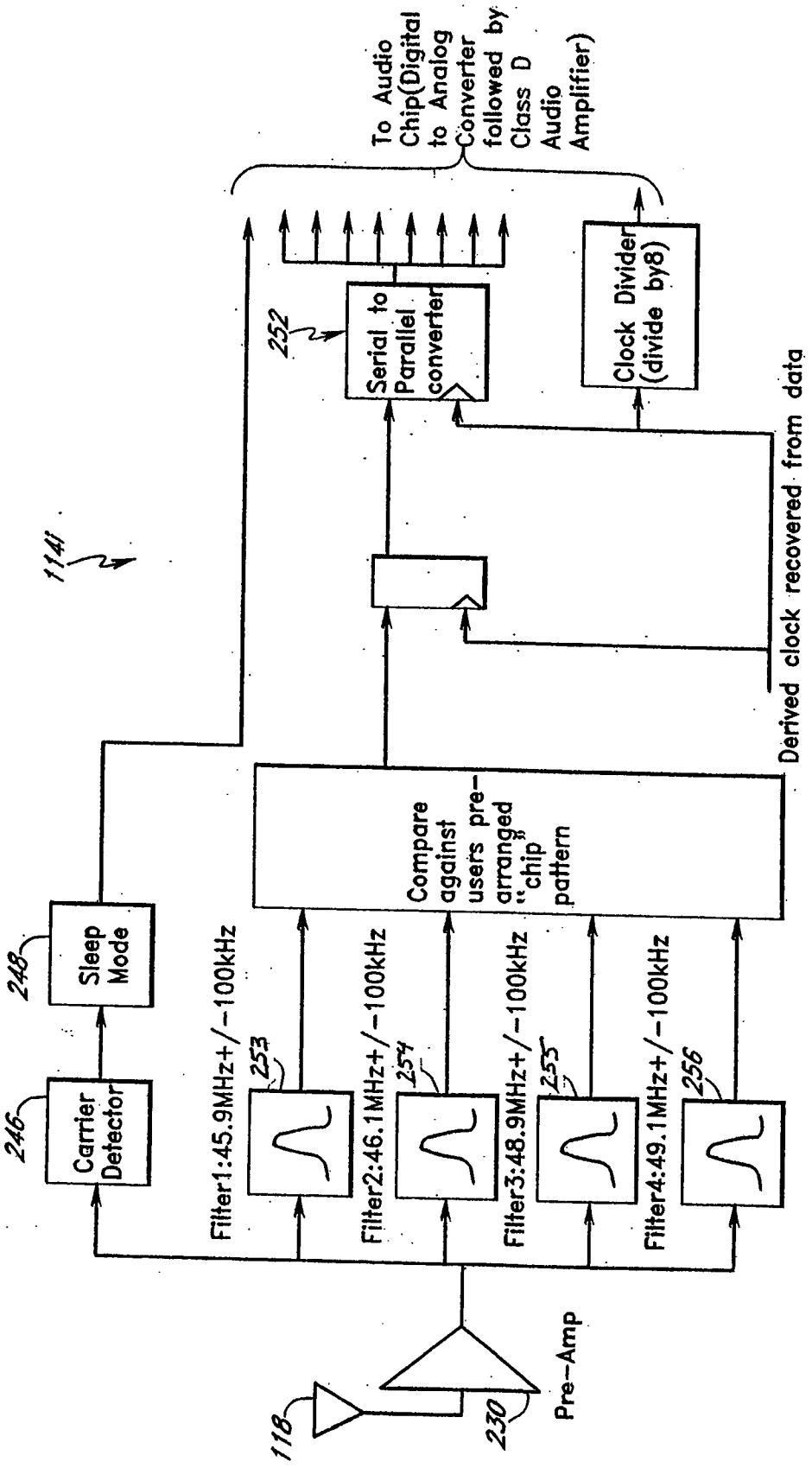
1141
To Audio Chip(Digital to Analog Converter followed by Class D Audio Amplifier)
252
Serial to Parallel converter
Clock Divider (divide by8)
Derived clock recovered from data
Compare against users pre-arranged "chip" pattern
248
Sleep Mode
246
Carrier Detector
Filter1:45.9MHz+/-100kHz
253
Filter2:46.1MHz+/-100kHz
254
Filter3:48.9MHz+/-100kHz
255
Filter4:49.1MHz+/-100kHz
256
Pre-Amp
230
118

FIG. 20

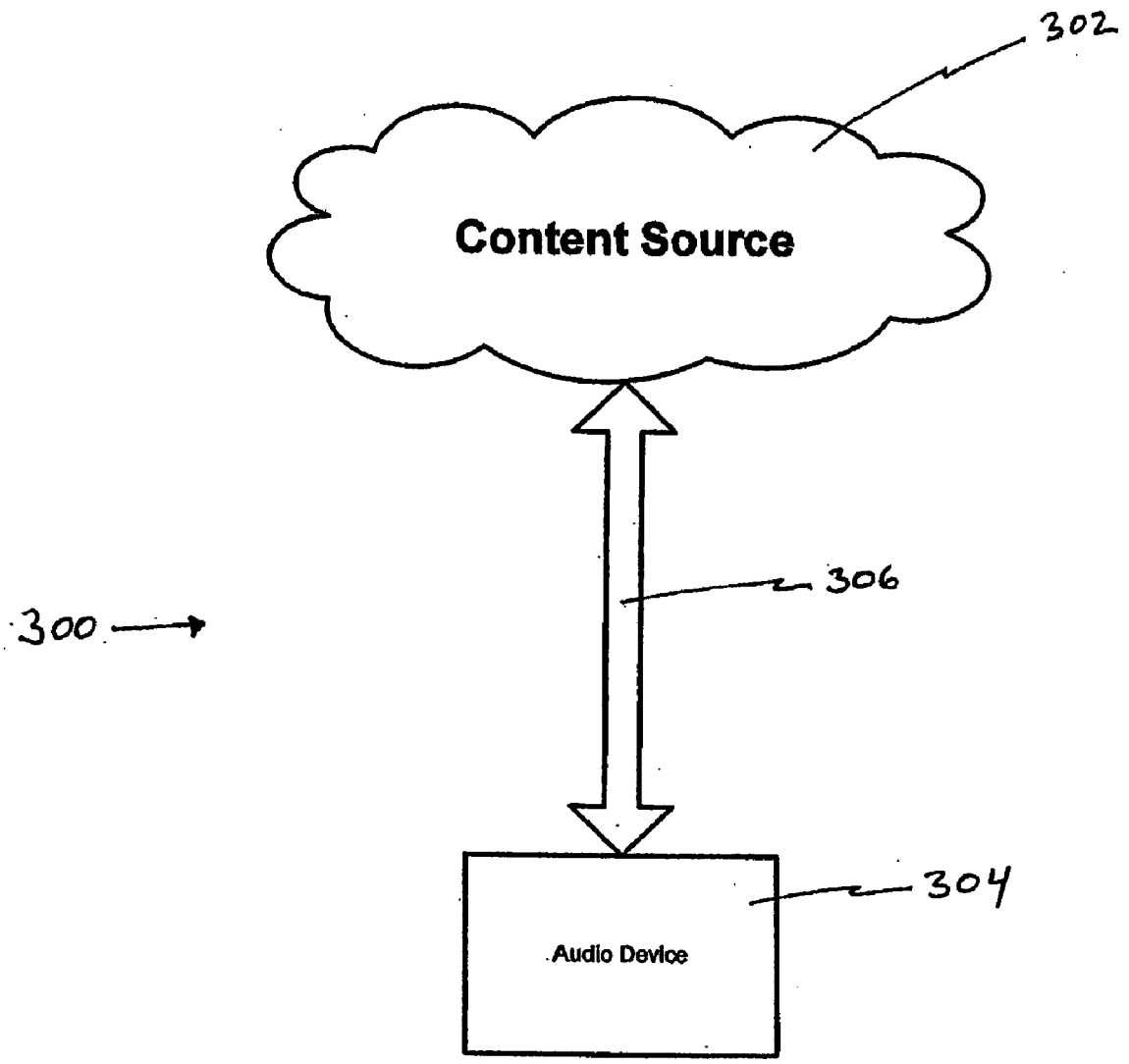

Figure 21

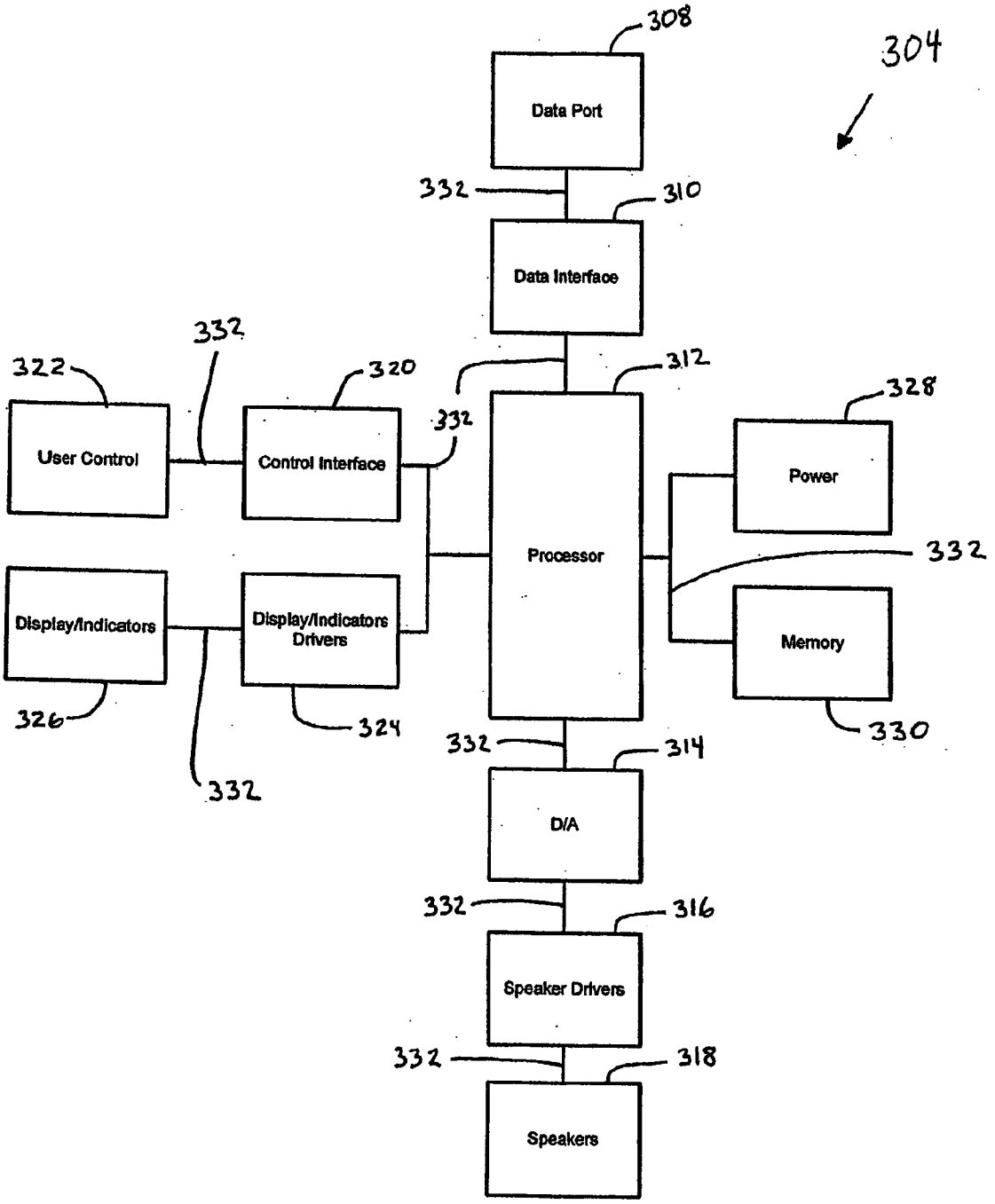
304
308
Data Port
332
310
Data Interface
332
322
320
312
328
User Control
Control Interface
332
Power
Processor
332
Display/Indicators
Display/Indicators Drivers
Memory
326
324
330
332
332
314
D/A
332
316
Speaker Drivers
332
318
Speakers

Figure 22

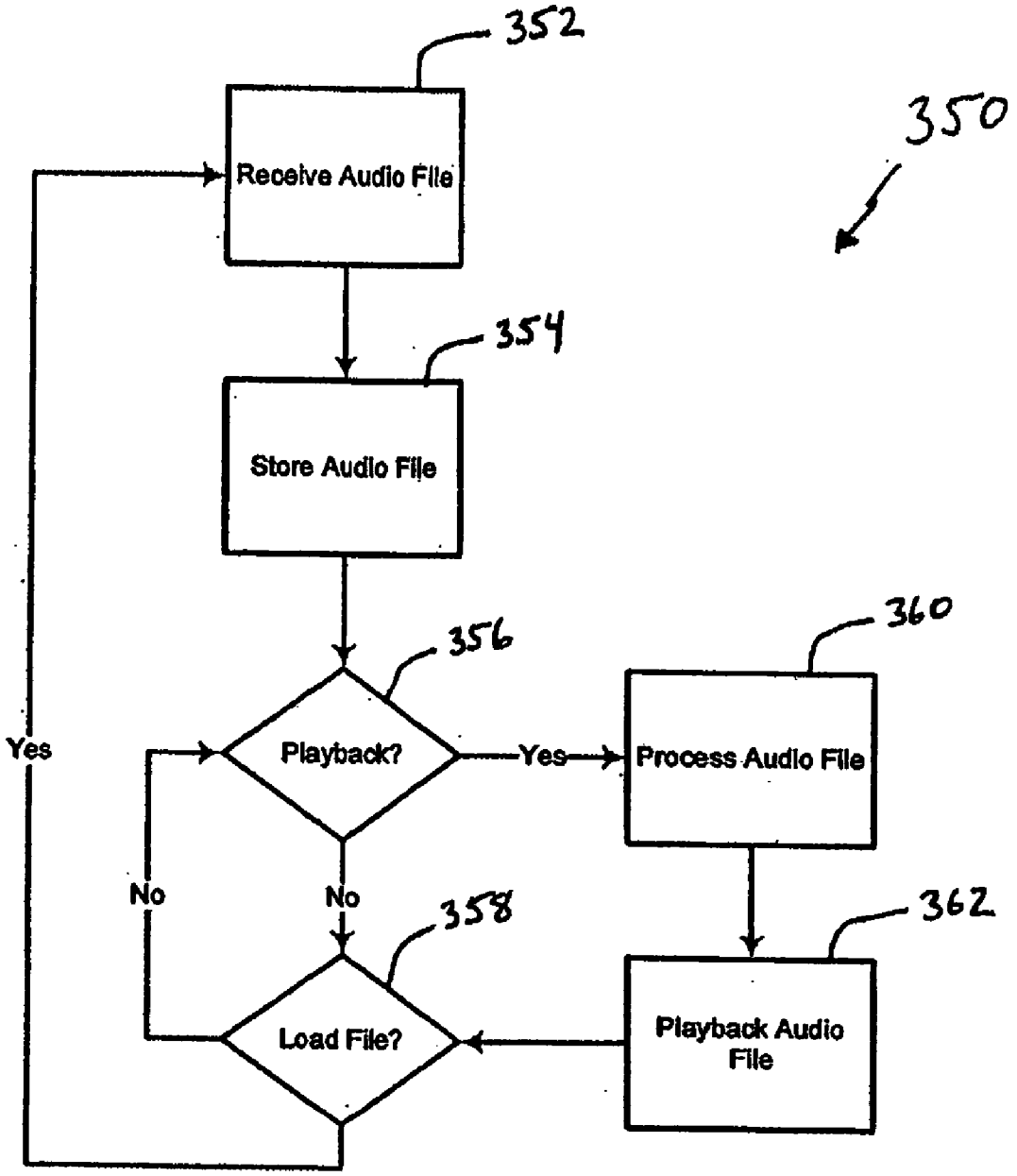
352
350
Receive Audio File
354
Store Audio File
356
360
Yes
Playback?
Yes
Process Audio File
No
No
358
362
Load File?
Playback Audio File

Figure 23

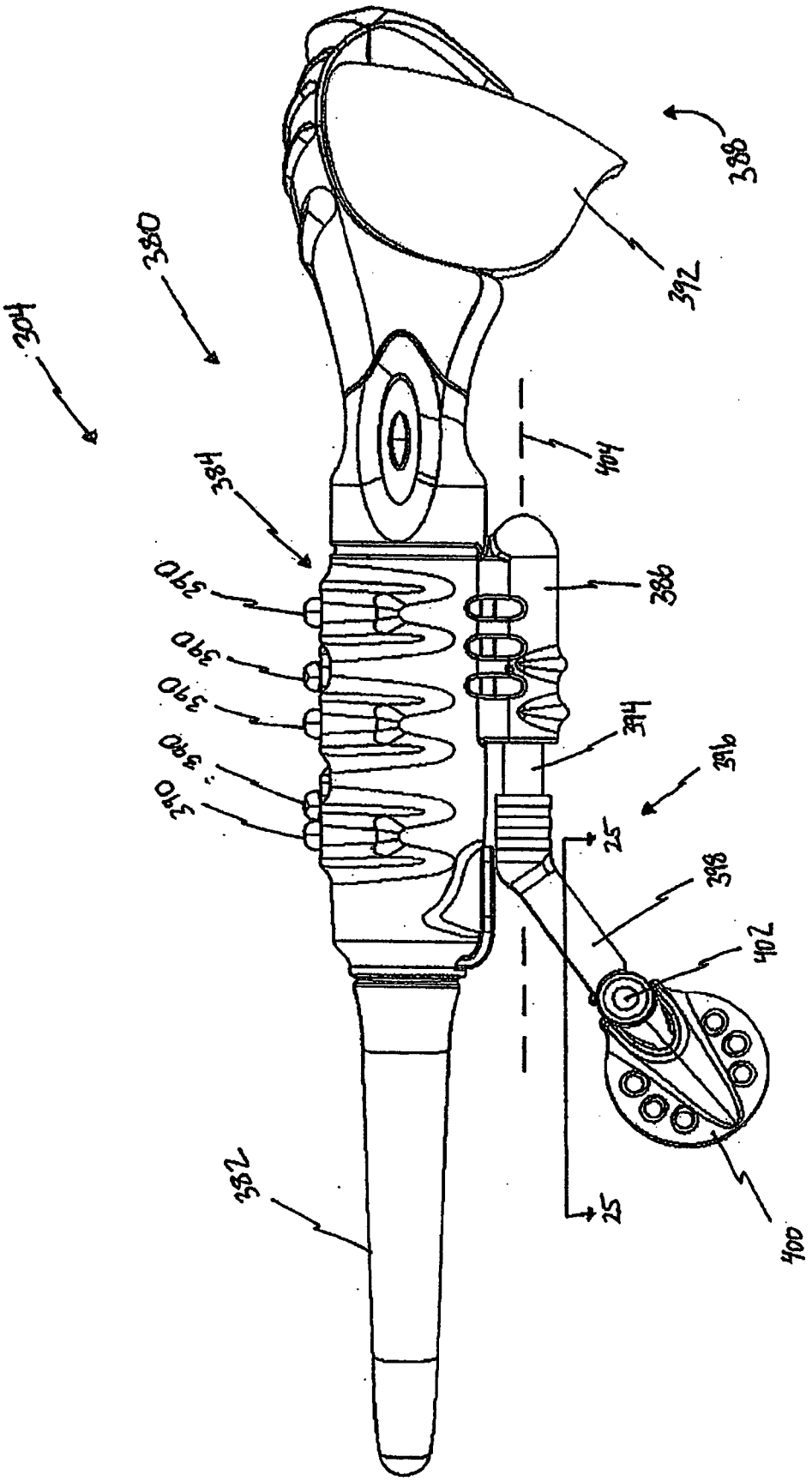
304
380
384
390
390
390
390
390
388
392
404
386
394
396
25
398
402
400
25
382

Figure 24

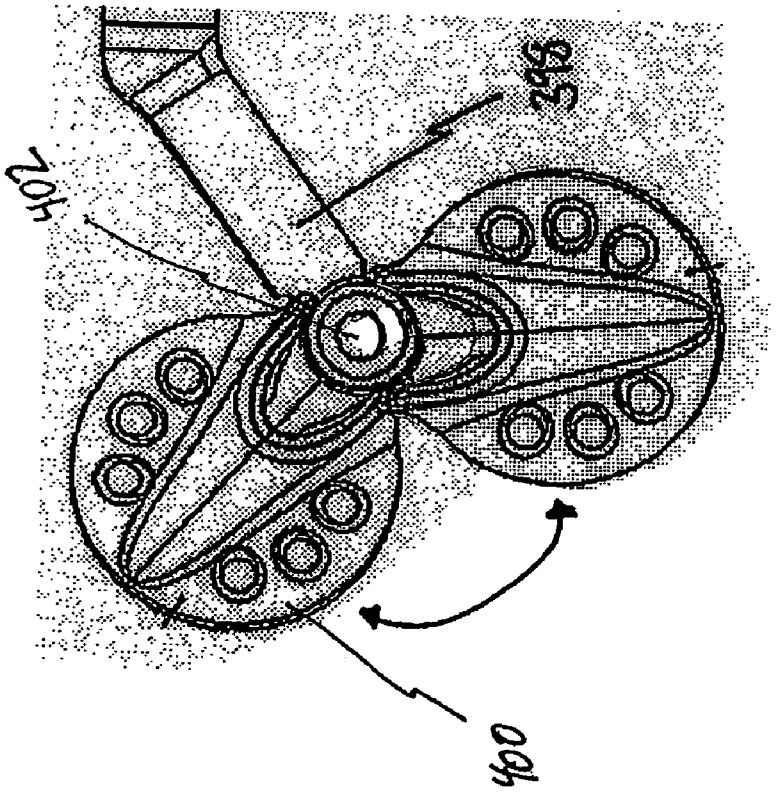

Figure 24A

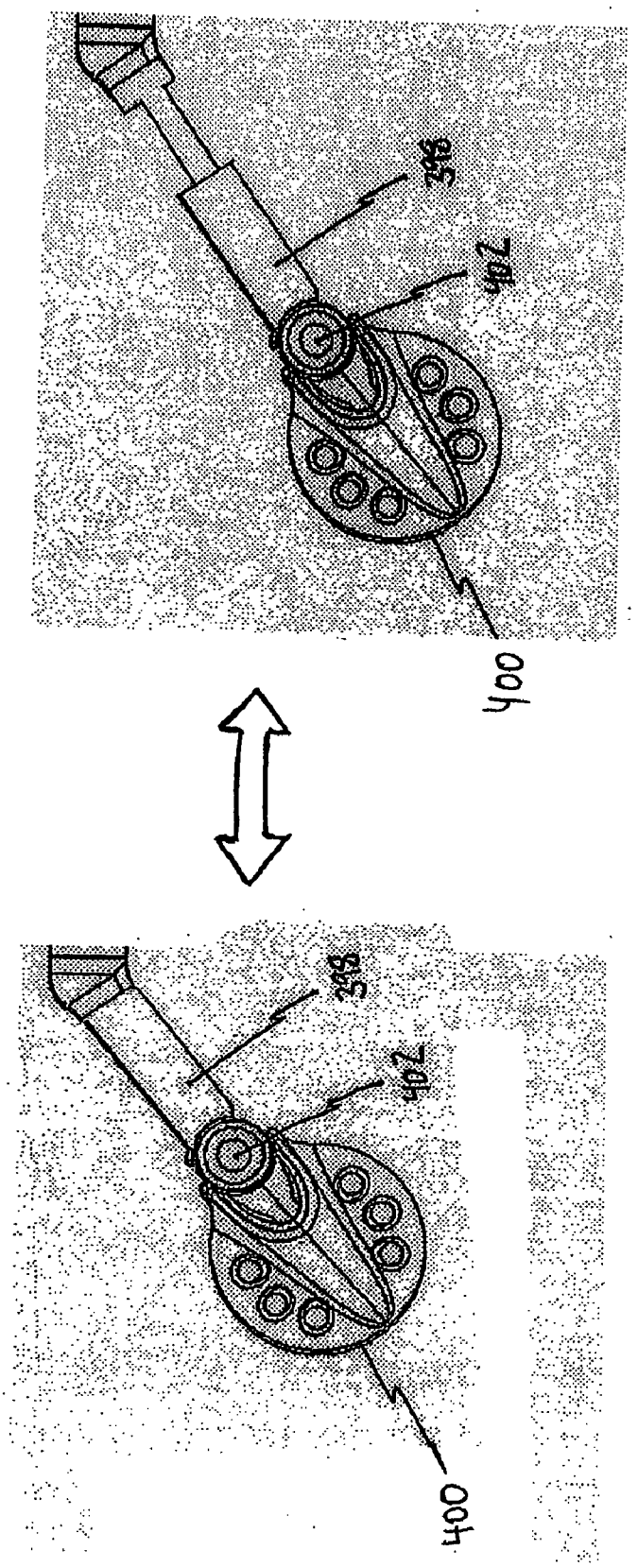

Figure 24B

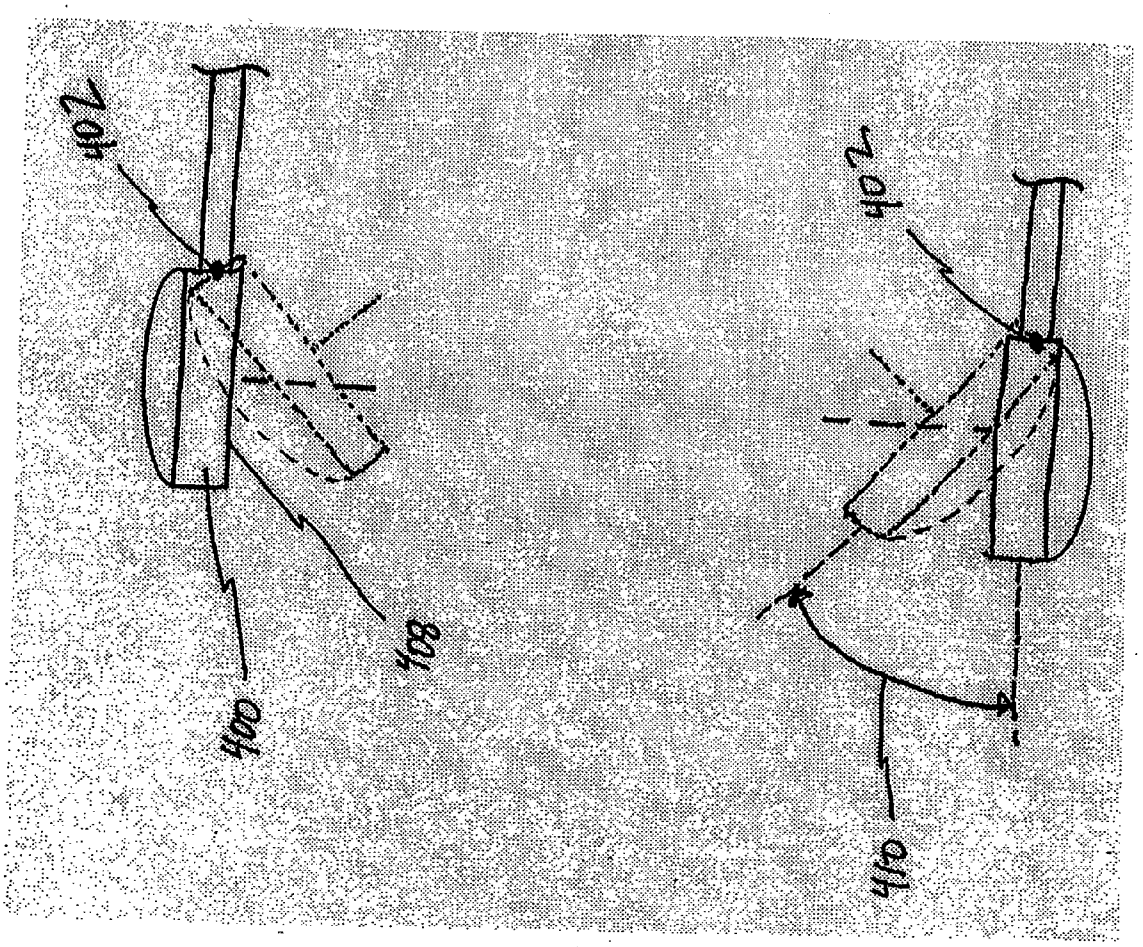

Figure 25

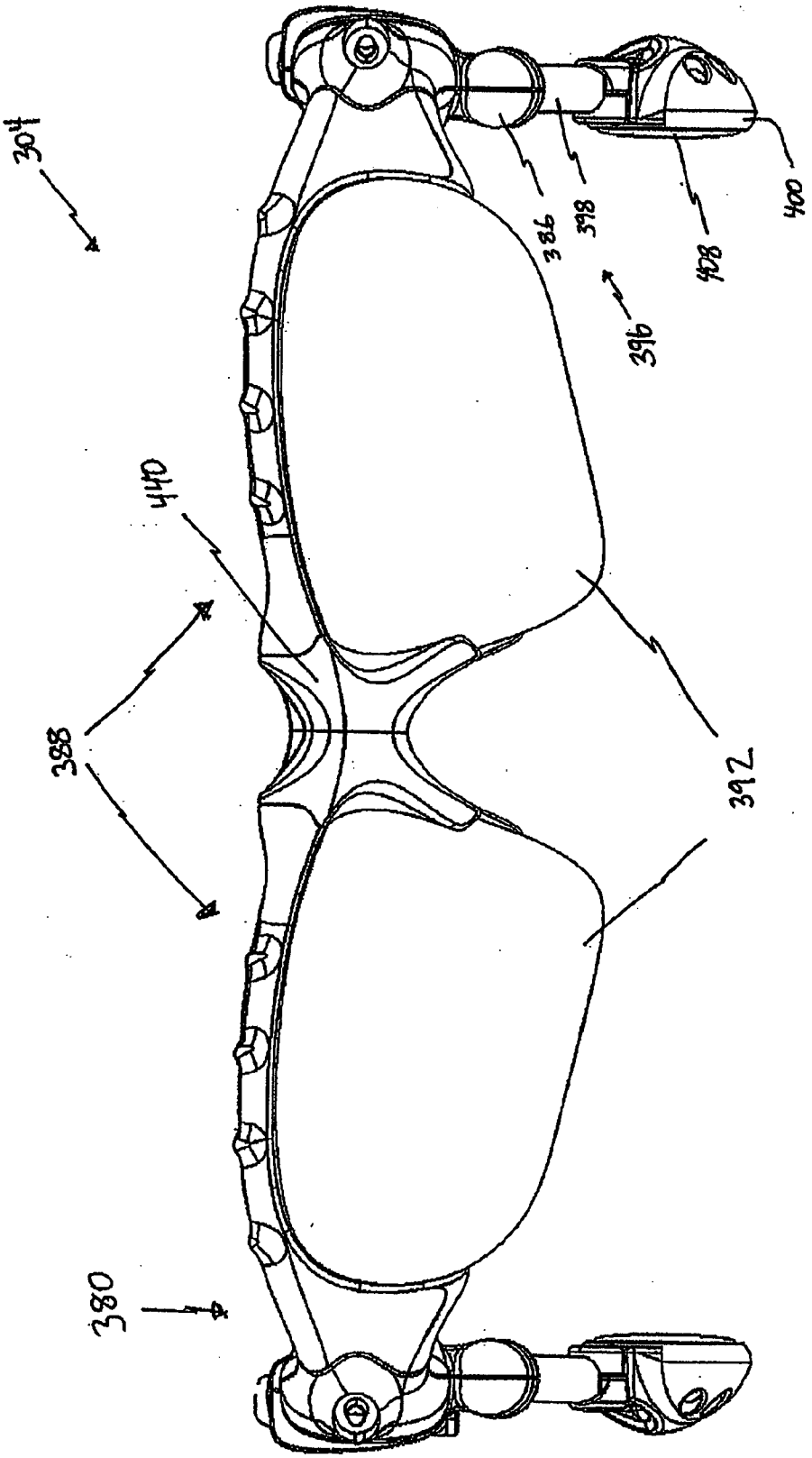

Figure 26

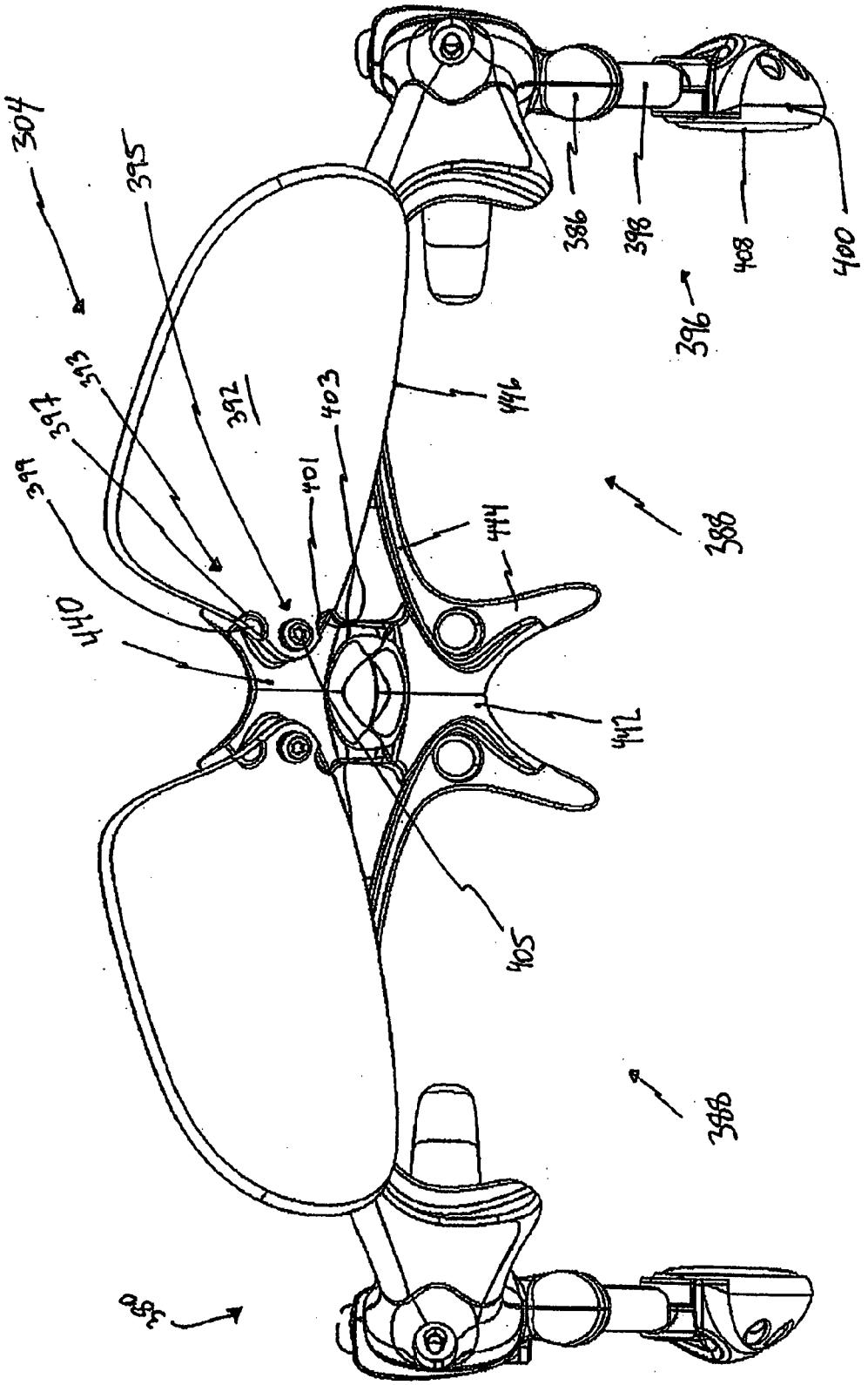
304
395
393
397
399
392
401
403
440
444
446
442
405
386
398
408
400
396
388
388
380

Figure 27

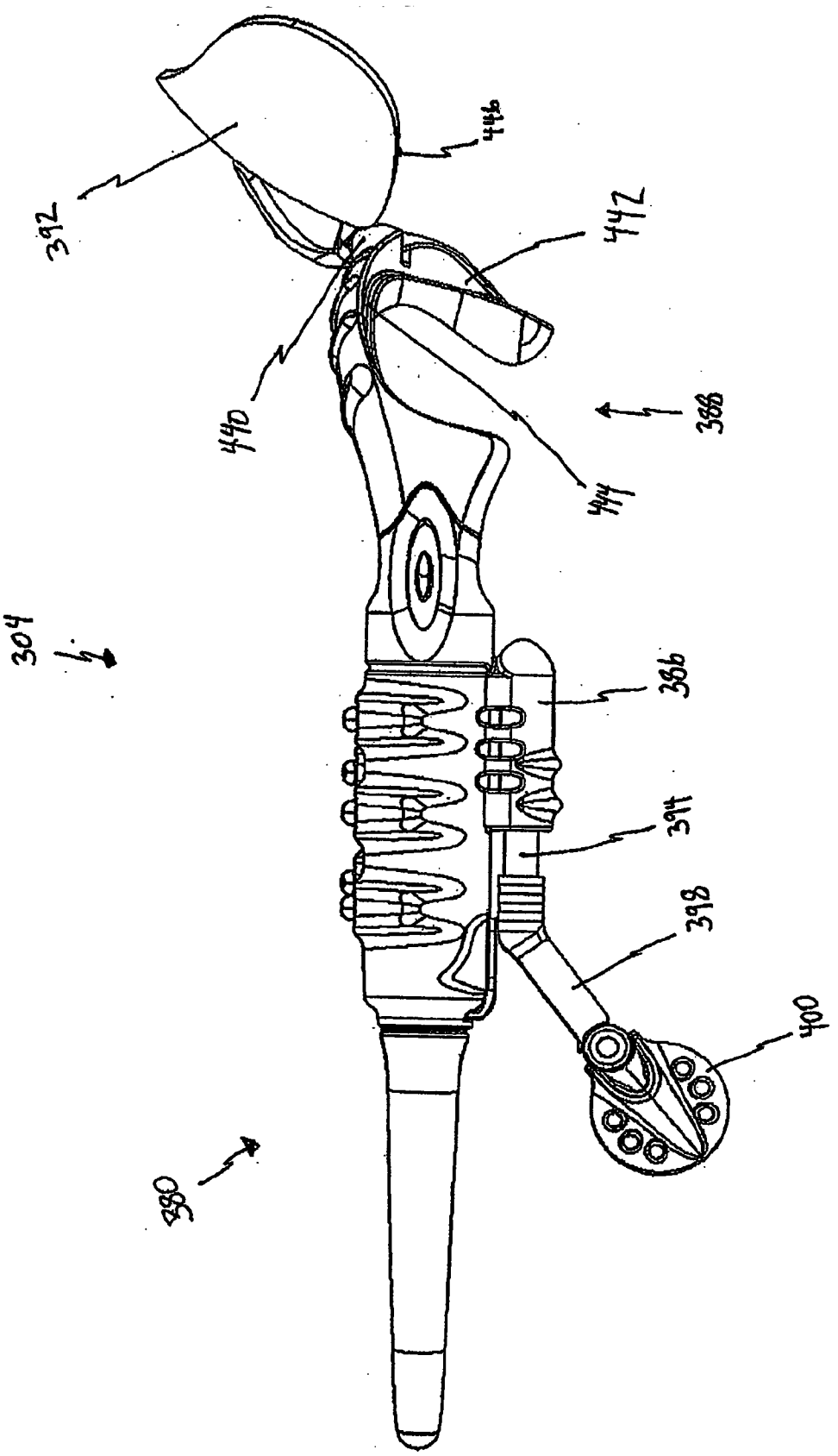

Figure 28

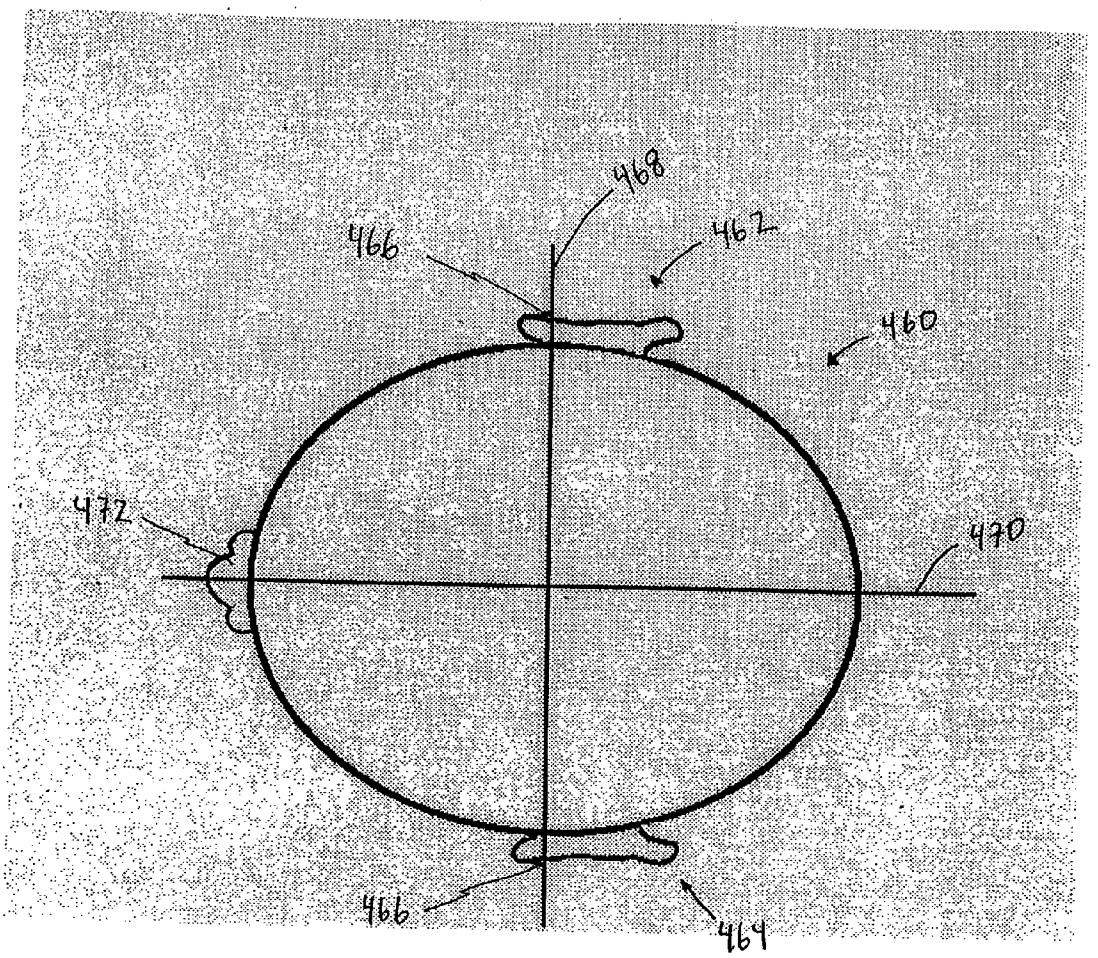

Figure 29

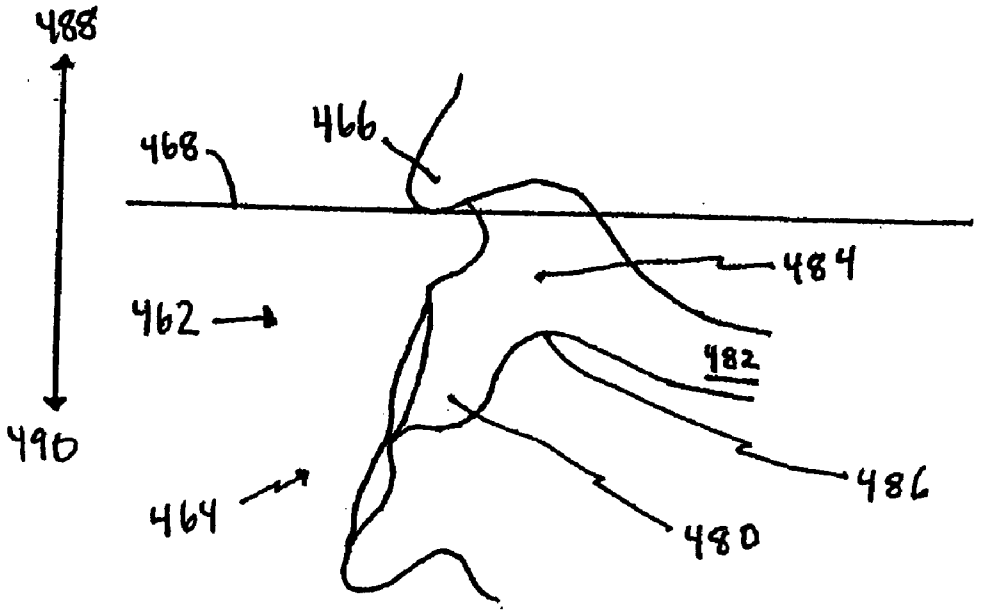

Figure 30

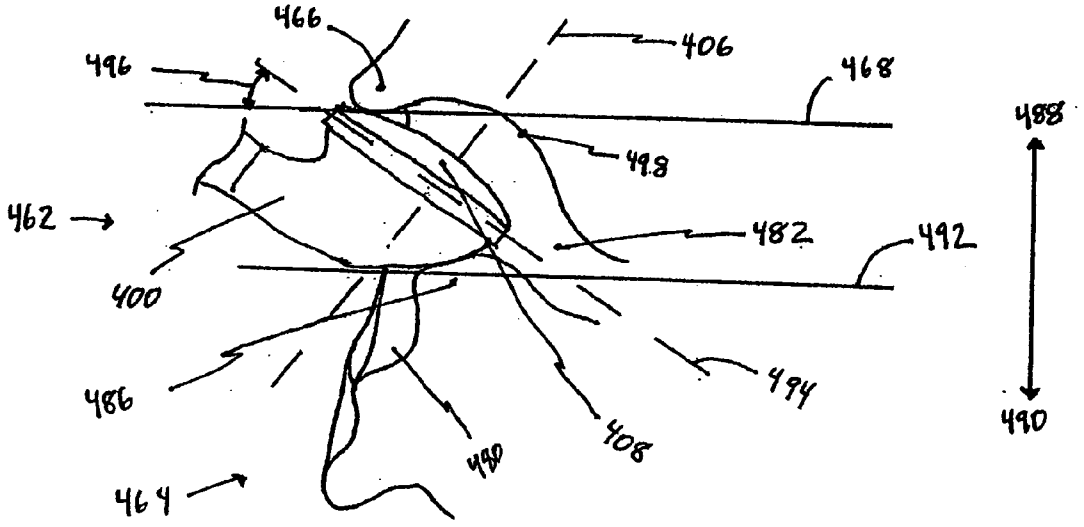

Figure 31

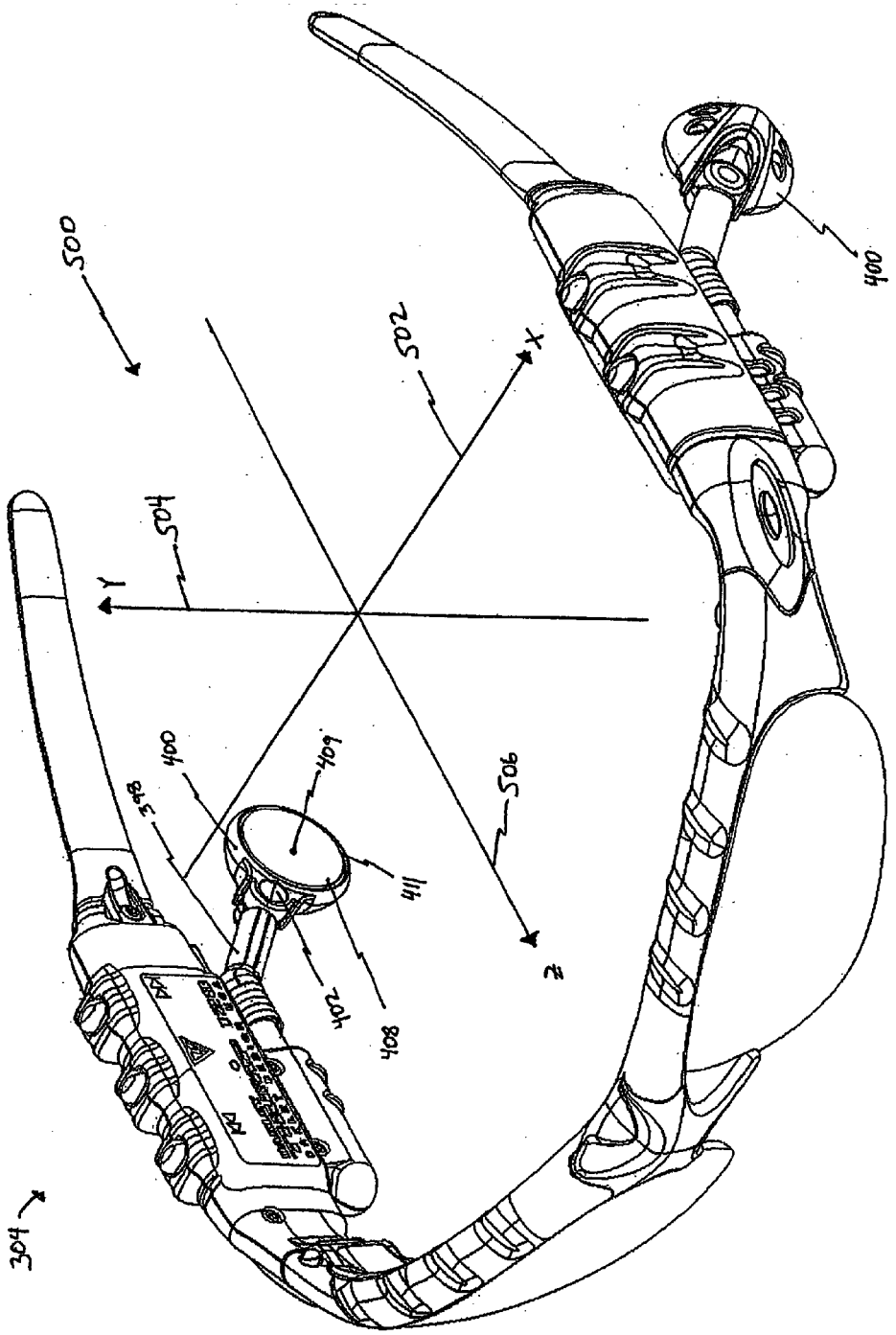

Figure 32

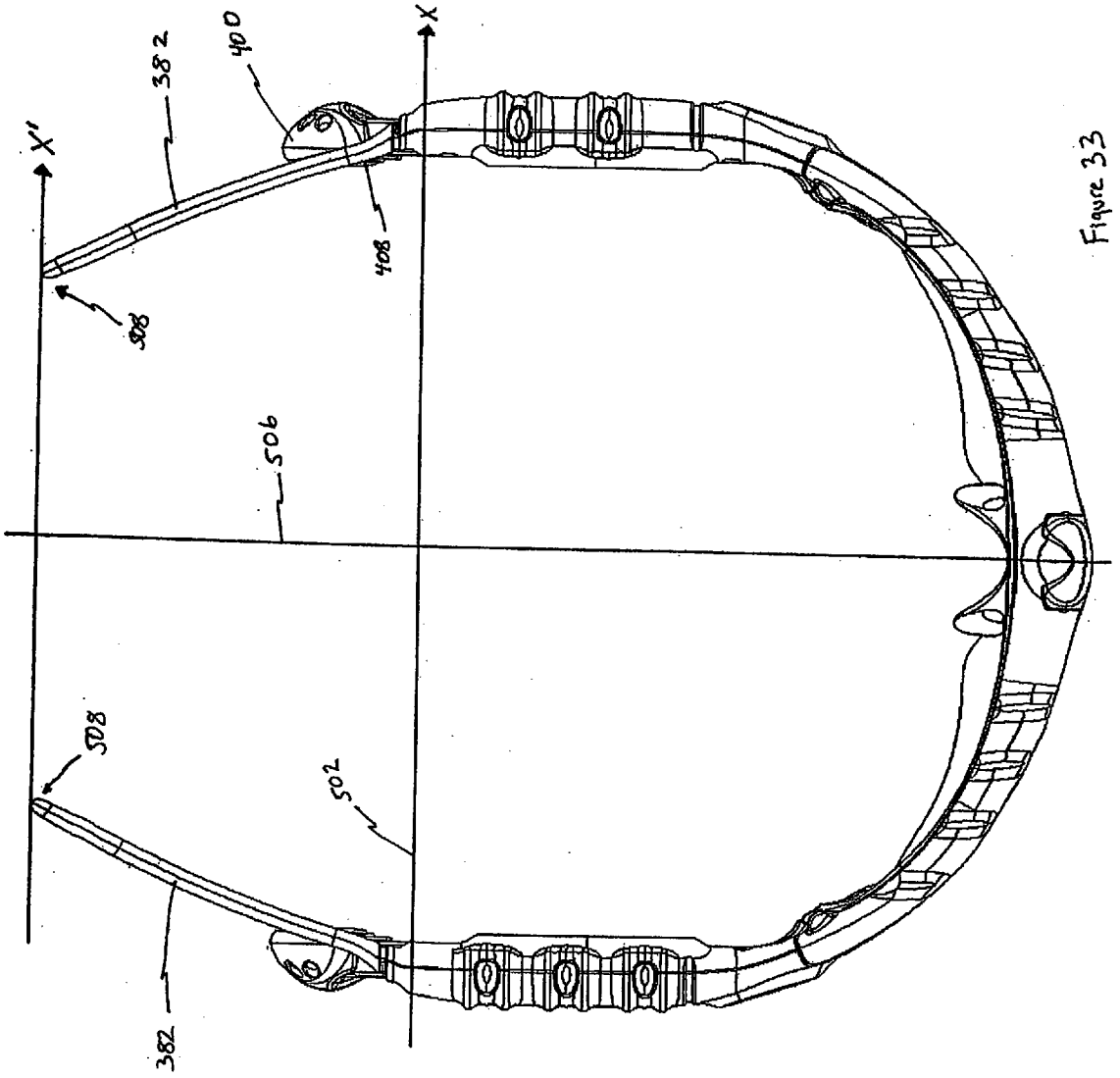

Figure 33

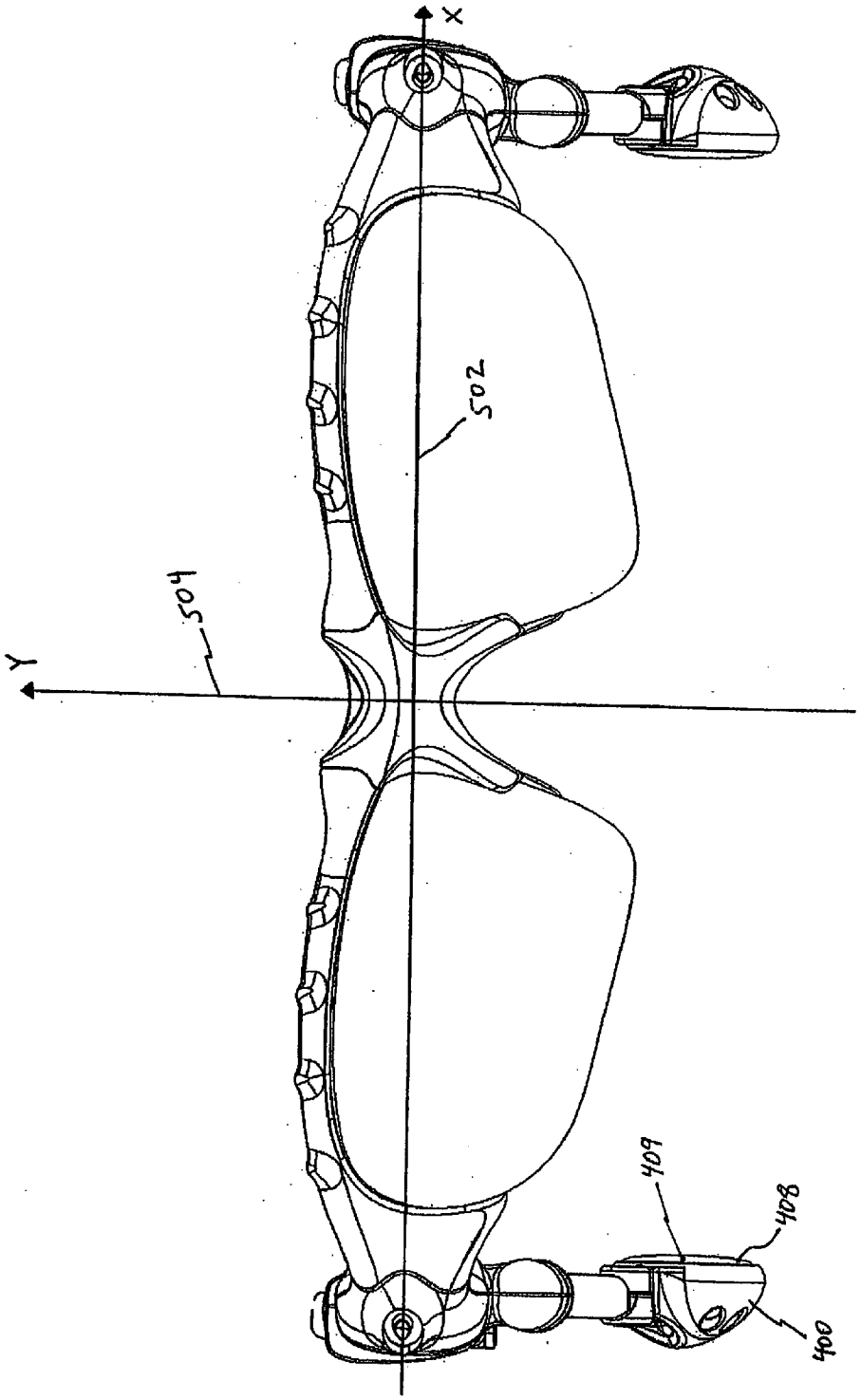

Figure 34

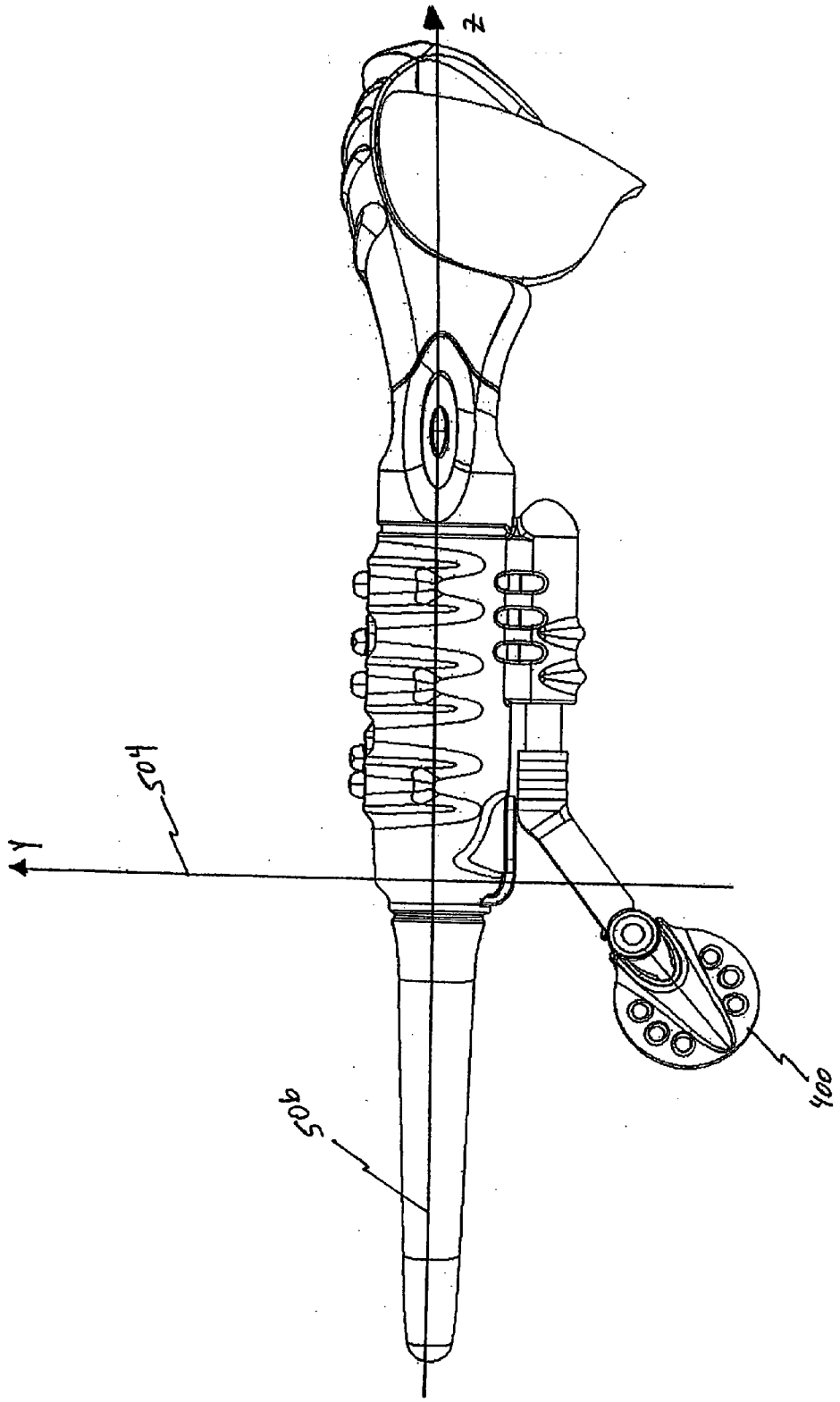

Figure 35

DATA INPUT MANAGEMENT SYSTEM FOR WEARABLE ELECTRONICALLY ENABLED INTERFACE

BACKGROUND OF THE INVENTION

[0001] 1. Field of the Invention

[0002] The present invention is directed to wearable electronically enabled devices, and in particular, to systems for managing which of a plurality of data sources is connected to the wearable device.

[0003] 2. Description of the Related Art

[0004] A variety of portable audio playback devices, such as MP3 players, allow a user to listen to audio files with the use of an audio interface such as headphones or speakers carried by ear plugs. For example, a user can wear a headset or ear "buds" connected by a flexible cable to an MP3 player, which can be worn on the belt. However, whenever a user wants to receive a cell phone call or even wear glasses or sunglasses, they must adjust or remove the audio interface from their ears.

[0005] Another commonly used device which must interface with the user is the cellular telephone. Typically, the cellular telephone has an input (microphone) which may be mounted on the cellular telephone housing, or on a wire which also connects to an earphone. The cellular telephone speaker may either be on the earphone, or mounted within the housing of the cellular telephone.

[0006] Although still under development, a variety of audiovisual data sources have been proposed which will provide audio input through a speaker, and video input through either opaque or see through heads-up display technology which can be incorporated into eyeglasses, helmets or other headwear.

[0007] A variety of other data sources are known, which require some form of audio or video input to a user, such as display screens on personal digital assistants, Blackberry® type communication devices, and others known in the art.

[0008] Each of the foregoing devices require an interface for providing audio or visual data to the user, and, where relevant, for receiving audio information from the user for inputting into the device. At the present time, the use of multiple data sources requires the user to switch between any of a variety of user interfaces, in accordance with the particular device sought to be used at a particular time.

[0009] In view of the foregoing, there remains a need for better management of input signals from multiple data sources, which will allow the user to more conveniently select input from any of a variety of sources.

SUMMARY OF THE INVENTION

[0010] In general, the data input management system in accordance with the present invention enables the user to select one or more data sources to be placed either simultaneously or one at a time into electrical communication with a single user interface. The interface may comprise any of a variety of physical forms, including electronically enabled eyeglasses. In one configuration, the user may select one source as a primary input source and a second source as a secondary input source. One primary input source might comprise a source of music, such as an MP3 player. A secondary input source might comprise a cellular telephone. The user may toggle between the input sources, to provide input to the user either automatically, or in response to demand by the user or other electronic prioritization protocol.

[0011] There is provided in accordance with one aspect of the present invention, a wearable cell phone and music system. The system comprises a wearable support, having a cell phone in communication with the support and a music source in communication with the support. An electronic interface is carried by the support. A selector is provided, for regulating the transmission of data from at least one of the cell phone and the music source to the interface. The selector may be a button carried by the support (e.g., on an earstem or on an orbital in an eyeglass configuration) to allow the wearer to switch between the cell phone and music source.

[0012] The wearable cell phone and music system may additionally comprise radiofrequency electronics such as a Bluetooth receiver or transceiver, for wireless communication between the cell phone and the support. The system may additionally comprise radiofrequency electronics for wireless communication between the music source and the support. The music source may either be carried by the support, or exist remotely from the support and communicate wirelessly with the support. In one embodiment, the music source comprises an MP3 player.

[0013] In accordance with another aspect of the present invention, there is provided a method of managing multiple signal sources configured to provide signals to a single wearable interface. The method comprises the steps of enabling data from a first source to reach a wearer through the interface. The wearer is provided with a signal indicative of data available from the second source. Data from the second source is enabled to reach the wearer through the interface in response to activation of a control by the wearer.

[0014] In one implementation of the invention, the first source comprises a source of music, or an audio track from a hand held entertainment device such as a DVD player. The second source may comprise a telephone. In one configuration of the invention, data from the first source is no longer provided to the interface (e.g., it is muted or put on pause) in response to activation of the control to select the second source. As a further option, transmission of data from the first source to the interface may be resumed in response to interruption of transmission of data from the second source to the interface. Alternatively data from the first source can continue to run through the interface in the background while the second source is simultaneously connected to the interface.

[0015] In accordance with a further aspect of the present invention, there is provided a wearable electronically enabled interface system, for providing audio and or video input to the wearer from at least two sources. The system comprises a wearable support, for carrying at least a portion of the interface. At least one data port is carried by the support, for receiving data from at least a first and optionally a second source. A selector is provided, enabling the wearer to direct data from a desired one of the first and second sources to the interface.

[0016] The wearable support may comprise an eyeglass frame. The data port may comprise a radiofrequency

receiver or transceiver. The interface may comprise at least one speaker, and, in certain implementations, the interface comprises two speakers. The interface may additionally comprise at least one microphone. The interface may further comprise a video display. The selector may comprise a wearer activated control such as a button, switch or voice activated electronic control.

[0017] Further features and advantages of the present invention will become apparent to those of skill in the art in view of the detailed description of preferred embodiments which follows, when considered together with the attached drawings and claims.

BRIEF DESCRIPTION OF THE DRAWINGS

[0018] **FIG. 1** is a schematic representation of a front elevational view of a wearable audio device supported by a human head.

[0019] **FIG. 2** is a left side elevational view of an implementation of the audio device illustrated in **FIG. 1**.

[0020] **FIG. 3A** is a front, left side, and top perspective view of a modification of the wearable audio device illustrated in **FIGS. 1 and 2**.

[0021] **FIG. 3B** is a top plan view of the audio device illustrated in **FIG. 3A**.

[0022] **FIG. 3C** is a schematic top plan view of the audio device of **FIG. 3A** worn on the head of a wearer.

[0023] **FIG. 3D** is a front, top, and left side perspective view of another modification of the wearable audio devices illustrated in **FIGS. 1, 2** and 3A-C.

[0024] **FIG. 3E** is a rear, top, and right side perspective view of the wearable audio device illustrated in **FIG. 3D**.

[0025] **FIG. 3F** is a right side elevational view of the wearable audio device illustrated in **FIG. 3D**.

[0026] **FIG. 3G** is a left side elevational view of the wearable audio device illustrated in **FIG. 3D**.

[0027] **FIG. 3H** is a front elevational view of the wearable audio device illustrated in **FIG. 3D**.

[0028] **FIG. 3I** is a top plan view of the wearable audio device illustrated in **FIG. 3D**.

[0029] **FIG. 3J** is a front, top, and left side perspective and exploded view of the wearable audio device illustrated in **FIG. 3D**.

[0030] **FIG. 3K** is an enlarged left side elevational view of one of the speakers of the audio device illustrated in **FIG. 3D**.

[0031] **FIG. 3L** is an enlarged front elevational view of the speaker illustrated in **FIG. 3K**.

[0032] **FIG. 3M** is a schematic illustration of the audio device illustrated in **FIG. 3D**.

[0033] **FIG. 4A** is a schematic representation of a rear and left side perspective view of a further modification of the wearable audio devices illustrated in **FIGS. 1, 2**, and 3A-J.

[0034] **FIG. 4B** is a schematic representation of a partial sectional and left side elevational view of the wearable audio device illustrated in **FIG. 4A** worn by a wearer.

[0035] **FIG. 5A** is a partial sectional and side elevational view of a modification of the wearable audio device illustrated in **FIG. 4A**.

[0036] **FIG. 5B** is a partial sectional and side elevational view of a modification of the wearable audio device illustrated in **FIG. 5A**.

[0037] **FIG. 6** is a left side elevational view of a modification of the audio device illustrated in **FIGS. 3-5** worn on the head of a user.

[0038] **FIG. 7** is a front elevational view of the audio device illustrated in **FIG. 6**.

[0039] **FIG. 8** is a schematic representation of a front elevational view of a further modification of the audio device illustrated in **FIGS. 1 and 2** worn by a wearer and interacting with source electronics.

[0040] **FIG. 8A** is a schematic illustration of an input data management system in accordance with the present invention.

[0041] **FIG. 8B** is a schematic illustration of one configuration of operation for the input management system of **FIG. 8A**.

[0042] **FIG. 9A** is an enlarged schematic representation of a front elevational view of the audio device illustrated in **FIG. 8**.

[0043] **FIG. 9B** is a schematic representation of a left side elevational view of the audio device illustrated in **FIG. 9A**.

[0044] **FIG. 10** is a schematic left side elevational view of a modification of the audio device illustrated in **FIGS. 8 and** 9A, B.

[0045] **FIG. 11** is a front elevational view of the audio device illustrated in **FIG. 10**.

[0046] **FIG. 12** is a top plan view of the audio device illustrated in **FIG. 10**.

[0047] **FIG. 13** is a schematic representation of a partial cross-sectional view of a portion of any of the audio devices illustrated in **FIGS. 1-12**.

[0048] **FIG. 14** is a schematic representation of a partial cross-sectional view of a modification of the portion illustrated in **FIG. 13**.

[0049] **FIG. 15** is a left side elevational view of a modification of the audio devices illustrated in **FIGS. 8-12**.

[0050] **FIG. 16** is a front elevational view of the audio device illustrated in **FIG. 15**.

[0051] **FIG. 17** is a schematic illustration of communication hardware which can be incorporated into any of the wearable audio device as illustrated in **FIGS. 1-16** and the communication hardware of another device.

[0052] **FIG. 18** is a schematic representation showing three output signals, the uppermost signal being the output of a source device, and the lower signals being the representation of the output of an encoder/decoder device illustrated in **FIG. 17**.

[0053] **FIG. 19** is a schematic illustration of the decoder illustrated in **FIG. 17**.

[0054] **FIG. 20** is a schematic illustration of a modification of the decoder illustrated in **FIG. 19**, which can be incorporated into any of the wearable audio devices illustrated in **FIGS. 1-16**.

[0055] **FIG. 21** is a schematic representation of an audio network.

[0056] **FIG. 22** is a schematic representation of the audio device illustrated in **FIG. 21**.

[0057] **FIG. 23** is a schematic representation of an audio playback method.

[0058] **FIG. 24** is a right side elevational view of an audio device.

[0059] **FIG. 24A** is a detail view of a speaker pivot as in **FIG. 24**.

[0060] **FIG. 24B** is a detail view of an axially extendable speaker support.

[0061] **FIG. 25** is a schematic of a cross-sectional view taken along line **25-25** of **FIG. 24**.

[0062] **FIG. 26** is a front elevational view of the audio device of **FIG. 24**.

[0063] **FIG. 27** is a front elevational view of the audio device of **FIG. 24** shown in a second configuration.

[0064] **FIG. 28** is a left side elevational view of the audio device of **FIG. 27**.

[0065] **FIG. 29** is a schematic representation of a top plan view of a wearer's head.

[0066] **FIG. 30** is a schematic representation of a partial horizontal cross-sectional view of the left ear of the wearer's head of **FIG. 29**.

[0067] **FIG. 31** is a schematic representation of a partial cross-sectional view of the left ear of the wearer's head of **FIG. 29**, illustrating a speaker positioned therein.

[0068] **FIG. 32** is an elevational perspective view of an audio device in relation to a reference system.

[0069] **FIG. 33** is a top plan view of the audio device and reference system of **FIG. 32**.

[0070] **FIG. 34** is a front elevational view of the audio device and reference system of **FIG. 32**.

[0071] **FIG. 35** is a side elevational view of the audio device and reference system of **FIG. 32**.

DETAILED DESCRIPTION OF THE PREFERRED EMBODIMENT

[0072] With reference to **FIGS. 1 and 2**, an audio device **10** includes a support **12** and left and right speakers **14**, **16**.

[0073] The audio device **10** is illustrated as being supported on the head **18** of a human. The head **18** includes a nose **19**, and left and right ears **20**, **22**. The schematic representation of human ears **20** and **22** are intended to represent the tissue forming the pinna of a human ear. With reference to **FIG. 2**, the meatus of the external auditory canal **24** is illustrated schematically as a circle (in phantom) generally at the center of the left ear **20**.

[0074] The support **12** is configured to be supported by the head **18**. Thus, the support **12** can be in the form of any of a variety of wearable garments or devices, such as any known headwear. For example, but without limitation, the support **12** can be in the form of a hat, sweatband, tiara, helmet, headphones, visor, and any of a variety of eyewear such as goggles, masks, face shields and eyeglasses.

[0075] Advantageously, the support **12** is configured to support the speakers **14**, **16** at a position juxtaposed to the ears **20**, **22**, respectively, without applying a force against the ears **20**, **22** sufficient for anchoring the speakers **14**, **16** in place. Thus, the support **12** contacts the head **18** at a position other than the outer surface of the ears **20**, **22**. As shown in **FIG. 1**, the support **12** is supported by the head **18** by a support portion **26** which contacts a portion of the head **18** other than the outer surface of the ears **20**, **22**. For example, but without limitation, the support **26** can contact the top of the head **18**, the sides of the head **18**, top of the nose **19**, forehead, occipital lobe, etc.

[0076] The audio device **10** also includes support members **28**, **30** which extend from the support **12** to the speakers **14**, **16**, respectively. The support members **28**, **30** are provided with sufficient strength to maintain the position of the speakers **14**, **16** such that the speakers **14**, **16** are spaced from the outer surface of the ears **20**, **22**.

[0077] Optionally, the support members **28**, **30** can be made from a flexible material configured to allow the speakers **14**, **16** to be moved toward and away from the ears **20**, **22**, respectively. For example, any of a variety of flexible metallic structures such as wire can be provided with a flexible polymer coating, to permit adjustability of the speakers **14**, **16**. Metal or polymeric segmented support members **28**, **30** can also be provided. In general, the support members in accordance with this aspect of the invention are sufficiently flexible that they may be moved by manual force between a first position in front of the ear of the wearer, and a second position, spaced apart from the first position. The support member **28**, **30** are then able to retain the position into which they have been moved.

[0078] Alternatively, the support members **28**, **30** can be mounted relative to the support **12** with a mechanical device configured to allow the speakers **14**, **16** to be moved toward and away from the ears **20**, **22** respectively. The same mechanical device or an additional mechanical device can also optionally be configured to allow the speakers **14**, **16** and/or supports **28**, **30** to be translated forward and rearwardly relative to the support **12**. Further, such mechanical devices can be used in conjunction with the flexibility provided to the support members **28**, **30** from a flexible material noted above. As such, the user can adjust the spacing between the speakers **14**, **16** and the ears **20**, **22** to provide the desired spacing.

[0079] As noted above, the speakers **14**, **16** are spaced from the ears **20**, **22** such that the speakers **14**, **16** do not engage the outer surface of the ears **20**, **22** with sufficient force to provide an anchoring effect for the speakers **14**, **16**. Thus, the speakers **14**, **16** can make contact with the ears **20**, **22**, at a pressure less than that sufficient to cause discomfort to the user.

[0080] Comfort of the user is further enhanced if the support **12** is configured to maintain gaps **32**, **34** between the

speakers **14**, **16** and the ears **20**, **22**, respectively. As such, the chance of irritation to the user's ears **20**, **22** is eliminated. Preferably, the gaps **32**, **34** are within the range from about 2 mm to about 3 cm. The gaps **32**, **34** can be measured from the inner surface of the speakers **14**, **16** and the outer surface of the tragus (small projection along the front edge of a human ear which partially overlies the meatus of the external auditory canal **24**) (**FIG. 2**).

[**0081**] Such a spacing can allow the support **12** to be removed and replaced onto the head **18** of the user without rubbing against the ears **20**, **22**. This makes the audio device **10** more convenient to use.

[**0082**] A modification of the audio device **10** is illustrated in **FIG. 3A**, and referred to generally by the reference numeral **10**A. Components of the audio device **10**A that are the same as the audio device **10** have been given the same reference numeral, except that a letter "A" has been added thereto.

[**0083**] In the illustrated embodiment of the audio device **10**A, the support **12**A is in the form of an eyeglass **40**. The eyeglass **40** comprises a frame **42** which supports left and right lenses **44**, **46**. Although the present audio device **10**A will be described with reference to a dual lens eyeglass, it is to be understood that the methods and principles discussed herein are readily applicable to the production of frames for unitary lens eyeglass systems and protective goggle systems as well. Further, the lenses **44**, **46** can be completely omitted. Optionally, at least one of the lenses **44**, **46** can be in the form of a view finder or a video display unit configured to be viewable by a wearer of the support **12**A.

[**0084**] Preferably, the lenses **44**, **46** are configured to provide variable light attenuation. For example, each of the lenses **44**, **46** can comprise a pair of stacked polarized lenses, with one of the pair being rotatable relative to the other. For example, each lens of the stacked pairs can comprise an iodine stained polarizing element. By rotating one lens relative to the other, the alignment of the polar directions of the lenses changes, thereby changing the amount of light that can pass through the pair. U.S. Pat. No. 2,237,567 discloses iodine stained polarizers and is hereby expressly incorporated herein by reference. Additionally, rotatable lens designs are disclosed in U.S. Pat. No. 4,149,780, which is hereby expressly incorporated herein by reference.

[**0085**] Alternatively, the lenses **44**, **46**, can comprise photochromic compositions that darken in bright light and fade in lower light environments. Such compositions can include, for example, but without limitation, silver, copper, and cadmium halides. Photochromic compounds for lenses are disclosed in U.S. Pat. Nos. 6,312,811, 5,658,502, 4,537,612, each of which are hereby expressly incorporated by reference.

[**0086**] More preferably, the lenses **44**, **46** comprise a dichroic dye guest-host device configured to provide variable light attenuation. For example, the lenses **44**, **46** can comprise spaced substrates coated with a conducting layer, an alignment layer, and preferably a passivation layer. Disposed between the substrates is a guest-host solution which comprises a host material and a light-absorbing dichroic dye guest. A power circuit (not shown) can be supported by the frame **42**. The power circuit is provided with a power supply connected to the conducting layers. Adjustment of the power supply alters the orientation of the host material which in turn alters the orientation of the dichroic dye. Light is absorbed by the dichroic dye, depending upon its orientation, and thus provides variable light attenuation. Such a dichroic dye guest-host device is disclosed in U.S. Pat. No. 6,239,778, which is hereby expressly incorporated by reference.

[**0087**] Alternatively, the lenses may be pivotably or hingeably connected to the frame, so that they may be partially or completely rotated out of the field of sight. See the discussion of **FIGS. 25 and 26**, below.

[**0088**] The frame **42** also comprises left and right orbitals **48**, **50** for supporting the left and right lenses **44**, **46**, respectively. Although the present invention will be described in the context of a pair of orbitals **48**, **50** which surround the respective lenses **44**, **46**, the principles of the present inventions also apply to eyeglass systems in which the orbitals only partially surround the lens or lenses, or contacts only one edge or a portion of one edge of the lens or each lens as well. In the illustrated embodiment, the orbitals **48**, **50** are connected by a bridge portion **52**.

[**0089**] The eyeglass **40** is also provided with a pair of generally rearwardly extending ear stems **54**, **56** configured to retain the eyeglass **40** on the head of a wearer. In addition, an open region **58** is configured to receive the nose of the wearer, as is understood in the art. The open region **58** may optionally be provided with a nose piece, either connected to the lens orbitals **48**, **50**, or the bridge **52**, or directly to the lenses, depending on the particular embodiment. Alternatively, the nose piece may be formed by appropriately sculpting the medial edges of the orbitals **48**, **50** and the lower edge of the bridge **52**, as in the illustrated embodiment.

[**0090**] The frame **42** and the ear stems **54**, **56** can be made from any appropriate material, including polymers and metals. Preferably, the frame **42** and the ear stems **54**, **56** are manufactured from a polymer. The orbitals **48**, **50** can be separately formed and assembled later with a separately manufactured bridge **52**, or the orbitals **48**, **50** and bridge **52** can be integrally molded or cast. When a metal material is used, casting the eyeglass components directly into the final configuration desirably eliminates the need to bend metal parts.

[**0091**] The ear stems **54**, **56** are pivotally connected to the frame **42** with hinges **60**, **62**. Additionally, the ear stems **54**, **56** preferably include padded portions **64**, **66**, respectively. The padded portions preferably comprise a foam, rubber, or other soft material for enhancing comfort for a wearer. The padded portions **64**, **66** preferably are positioned such that when the audio device **10**A is worn by a wearer, the padded portions **64**, **66** contact the wearer between the side of the user's head and the superior crux and/or upper portion of the helix of the wearer's ears.

[**0092**] In the illustrated embodiment, the support members **28**A, **30**A are in the form of support arms **68**, **70** extending downwardly from the ear stems **54**, **56**, respectively. As such, the speakers **14**A, **16**A can be precisely positioned relative to the ears **20**, **22** (**FIG. 1**) of a wearer's head **18**. Because the eyeglass **40** is generally supported at three points of contact with the wearer's head, the alignment of the speakers **14**A, **16**A with the ears **20**, **22** can be reliably

repeated. In particular, the eyeglass **40** is supported at the left ear stem in the vicinity of the left ear **20**, at the bridge **52** by a portion of the user's head **18** in the vicinity of the nose **19**, and at the right ear stem **56** by a portion of the user's head **18** in the vicinity of the ear **22**.

[**0093**] Optionally, the support arms **68**, **70** can be flexible. Thus, users can adjust the spacing **32**, **34** (**FIG. 1**) between the speakers **14**A, **16**A and the ears **20**, **22**, respectively. Once a wearer adjusts the spacing of the speakers **14**A, **16**A from the ears **20**, **22**, respectively, the spacing will be preserved each time the wearer puts on or removes the eyeglass **40**. The various degrees of adjustability for the speakers will be discussed in detail below.

[**0094**] Further, the support arms **68**, **70** can be attached to the ear stems **54**, **56**, respectively, with mechanical devices (not shown) configured to allow the support arms **68**, **70** to be adjustable. For example, such a mechanical device can allow the support arms **68**, **70** to be pivoted, rotated, and/or translated so as to adjust a spacing between the speakers **14**A, **16**A and the ears **20**, **22**. The same mechanical devices or other mechanical devices can be configured to allow the support arm **68**, **70** to be pivoted, rotated, and/or translated to adjust a forward to rearward alignment and/or an up-down alignment of the speakers **14**A, **16**A and the ears **20**, **22**, respectively. Such mechanical devices are described in greater detail below with reference to FIGS. **3**D-J and **FIGS. 23-30**, below.

[**0095**] With the configuration shown in **FIG. 3A**, the audio device **10**A maintains the speakers **14**A, **16**A in a juxtaposed position relative to the ears **20**, **22**, respectively, and spaced therefrom. Thus, the user is not likely to experience discomfort from wearing and using the audio device **10**A.

[**0096**] Preferably, the support arms **68**, **70** are raked rearwardly along the ear stems **54**, **56**, respectively. As such, the support arms **68**, **70** better cooperate with the shape of the human ear. For example, the helix and the lobe of the human ear are generally raised and extend outwardly from the side of a human head. The helix extends generally from an upper forward portion of the ear, along the top edge of the ear, then downwardly along a rearward edge of the ear, terminating at the lobe. However, the tragus is nearly flush with the side of the human head. Thus, by arranging the support arm **68**, **70** in a rearwardly raked orientation, the support arms **68**, **70** are less likely to make contact with any portion of the ear. Particularly, the support arms **68**, **70** can be positioned so as to be lower than and medial to the upper portion of the helix, above the lobe, and preferably overlie the tragus.

[**0097**] Alternatively, the support arms **68**, **70** can be attached to the ear stems **54**, **56**, respectively, at a position rearward from the meatus of the ears **20**, **22** when the eyeglass **40** is worn by a user. As such, the support arms **68**, **70** preferably are raked forwardly so as to extend around the helix and position the speakers **14**A, **16**A approximately over the tragus. This construction provides a further advantage in that if a user rotates the eyeglass **40** such that the lenses **44**, **46** are moved upwardly out of the field of view of the wearer (such that the eyeglasses are worn across the forehead or across the top of the head), the speakers **14**A, **16**A can be more easily maintained in alignment with the ears **20**, **22** of the wearer.

[**0098**] Preferably, the support arms **68**, **70** are raked rearwardly so as to form angles **72**, **74** relative to an approximate longitudinal axis of the ear stems **54**, **56**. The angles **72**, **74** can be between 0 and 90 degrees. Preferably, the angles **72**, **74** are between 10 and 70 degrees. More preferably, the angles **72**, **74** are between 20 and 50 degrees. The angles **72**, **74** can be between about 35 and 45 degrees. In the illustrated embodiment, the angles **72**, **74** are about 40 degrees.

[**0099**] Optionally, the support arm **68**, **70** can be curved within an anterior—posterior plane. In this configuration, the angles **72**, **74** can be measured between the longitudinal axis of the ear stems **54**, **56** and a line extending from the point at which the support arm **68**, **70** connect to the ear stems **54**, **56** and the speakers **14**A, **16**A.

[**0100**] The audio device **10**A can be used as an audio output device for any type of device which provides an audio output signal. The audio device **10**A can include an audio input terminal or jack disposed anywhere on the eyeglass **40** for receiving a digital or analog audio signal. Preferably, wires connecting the input jack (not shown) with the speakers **14**A, **16**A extend through the interior of the ear stems **54**, **56** so as to preserve the outer appearance of the eyeglass **40**. Alternatively, the audio device **10**A can include a wireless receiver or transceiver for receiving digital signals from another device.

[**0101**] With reference to **FIGS. 3D-3J**, a modification of the audio devices **10**, **10**A is illustrated therein and referred to generally by the reference numeral **10**A'. The audio device **10**A' can include the same components as the audio devices **10**, **10**A except as noted below. Components of the audio device **10**A' that are similar to the corresponding components of the audio devices **10**, **10**A may be identified with the same reference numerals except, that a "'" has been added thereto.

[**0102**] The audio device **10**A' is in the form of an eyeglass **12**A' having a frame **40**A'. The audio device **10**A' also includes a device for the storage and playback of a sound recording.

[**0103**] As noted above, an aspect of at least one of the inventions disclosed herein includes a realization that the forward to rearward spacing of the bridge of a human nose to the auditory canal of the ear falls into a relatively narrow range of distances for large portions of the population. For example, the forward-to-rearward spacing from the bridge of the nose to the auditory canal is normally between about 4⅞ inches to about 5⅛ inches, and often between about 4¾ inches and about 5¼ inches. Corresponding anterior-posterior plane adjustability of the speakers is preferably provided.

[**0104**] Thus, with reference to **FIG. 3F**, the audio device **10**A' is configured such that the supports **68'**, **70'**, can translate, along a forward to rearward direction, over a range identified generally by the reference numeral Rt. Preferably, the range Rt is at least about ⅛ of one inch. Further, the range Rt can be at least about ¼ of one inch. Further, the range Rt can be in the range of from about 0.25 inches to about 1.5 inches, and in one construction is about 0.75 of one inch. The midpoint of the anterior-posterior range of motion is generally positioned with respect to the bridge of the nose within the range of from about 4⅞ inches to about 5⅛ inches

posteriorly of the eyeglass nose bridge. As such, a substantial percentage of the human population will be able to align a Center (C) of the speakers **14**A', **16**A' with their auditory canal.

[**0105**] With reference to **FIG. 3G**, a further advantage is provided where the diameter Ds of the speakers **14**A', **16**A' is greater than about 0.5 inches, such as about 1 inch or greater. As such, an effective range Re (**FIG. 3F**) over which the speakers **14**A', **16**A' can reach, is significantly enhanced with respect to the above-noted nose bridge to auditory canal spacings for humans.

[**0106**] Thus, the connection between the supports **68'**, **70'** to the ear stems **54'**, **56'**, respectively, can be configured to allow a limited anterior-posterior translational range of movement of Rt yet provide a larger range of coverage Re.

[**0107**] Preferably, the connection between the support **68'**, **70'** and the ear stems **54'**, **56'**, is configured such that the translational position of the speakers **14**A', **16**A' is maintained when a user removes the audio device **10**A' from their head. For example, the connection between the supports **68'**, **70'**, and the ear stems **54'**, **56'** can generate sufficient friction so as to resist movement due to the weight of the supports **68'**, **70'** and the speakers **14**A', **16**A'. Alternatively, the connection or an adjustment device can include locks, clips, or other structures to prevent unwanted translational movement of the speakers **14**A', **16**A'. As such, a further advantage is provided in that a user can repeatedly remove and replace the audio device **10**A' without having to readjust the translational position of the speakers **14**A', **16**A'.

[**0108**] Another advantage is provided where the supports **68'**, **70'** are made from a material or design that is substantially rigid, at least at room temperature. For example, with reference to **FIG. 3F**, the angles **72'**, **74'** defined between the supports **68'**, **70'** and the ear stems **54'**, **56'**, respectively, can be maintained at a predetermined value while the speakers **14**A', **16**A' can be moved along an anterior-posterior axis over the range Rt. Thus, as noted above with reference to **FIG. 3A** and the description of the angles **72**, **74**, the angles **72'**, **74'** can be maintained at a desired angle as a user moves the speakers **14**A', **16**A' over the range Rt.

[**0109**] Optionally, the supports **68'**, **70'** can be made from a material that can be deformed at room temperature. However, more preferably the material is sufficiently rigid such that substantial pressure is required to change the angle **74'**. Alternatively, the supports **68'**, **70'** can be made from a thermally sensitive material that can be softened with the application of heat. Thus, a wearer of the audio device **10**A' can heat the supports **68'**, **70'** and adjust the angle **74'** to optimize comfort for the particular wearer. Such thermal sensitive materials are widely used in the eyewear industry and thus a further description of such materials is not deemed necessary for one of ordinary skill in the art to make and use the inventions disclosed herein. Alternatively, the speakers can be pivotably mounted to the supports, and/or the supports can be pivotably mounted to the ear stems, to allow further adjustability in the anterior-posterior plane as well as in the lateral or medial direction.

[**0110**] Preferably, the angles **72'**, **74'** and lengths of the corresponding supports are selected such that the spacing Vs between the center C of the speakers **14**A', **16**A' and a lower surface of the ear stems **54'**, **56'** is within the range of about 0.25 inch to about 1.75 inch, and often within the range of from about 0.75 of an inch to about 1.25 inches. One aspect of at least one of the inventions disclosed herein includes the realization that there is little variation in the spacing for adult humans between the center of the auditory canal and the connecting tissue between the pinna of the ear and the skin on the side of the head. In particular, it has been found that in virtually all humans, the distance between the upper most connection of the ear and the head to the center of the auditory canal is between 0.75 of an inch and 1.25 inches. Thus, by sizing the angles **72'**, **74'** such that the spacing Vs is between about 0.75 of an inch and 1.25 inches, the audio device **10**A can be worn by virtually any adult human and has sufficient alignment between the wearer's auditory canal and the center C of the speakers **14**A', **16**A'. Further, where the diameter Ds of the speakers **14**A', **16**A' is about 1 inch, almost any human can wear the audio device **10**A' without having to adjust the angles **72'**, **74'**. In other words, the auditory canal of virtually any human would be aligned with a portion of the speakers **14**A', **16**A' although the wearer's auditory canal might not be precisely aligned with the center C of the speakers **14**A', **16**A'.

[**0111**] With reference to **FIG. 3H**, the supports **68'**, **70'** are configured to allow the speakers **14**A', **16**A', respectively, to pivot toward and away from an ear of a user. For example, as shown in **FIG. 3H**, the supports **68'**, **70'** are connected to the ear stems **54'**, **56'**, respectively, so as to be pivotable about a pivot axis P. As such, the speakers **14**A', **16**A' can be pivoted or swung about the pivot axis P.

[**0112**] The range of motion provided by the connection between the supports **68'**, **70'** and the ear stems **54'**, **56'** is identified by the angle S in **FIG. 3H**. In **FIG. 3H**, the speaker **14**A' is illustrated in an intermediate position in the range of motion provided by the connection between the support **68'** and the ear stem **54'**.

[**0113**] The illustration of the speaker **16**A' includes a solid line representation showing a maximum outward position of the speaker **16**A' (not to actual scale). Additionally, **FIG. 3H** includes a phantom illustration of the speaker **16**A' in a maximum inward position. The angle S illustrates a range of motion between a maximum outward position (solid line) and a maximum inward position (phantom line) of the speaker **16**A'.

[**0114**] Preferably, the range of motion S is sufficiently large to allow any human wearer of the audio device **10**A' to position the speakers **14**A', **16**A' such that sound emitted from the speakers **14**A', **16**A' is clearly audible yet comfortable for the wearer of the audio device **10**A'. For example, human ears vary in the precise shape and size of the external anatomy. As such, one wearer of the audio device **10**A' may have outer facing features of their ear that project further than another wearer of the audio device **10**A'. Thus, one wearer may prefer the speakers **14**A', **16**A' to be positioned more inwardly than another wearer.

[**0115**] Further, some wearers of the audio device **10**A' may prefer to press the speakers **14**A', **16**A' into contact with the outer surfaces of their ears. For example, some users may desire to experience to loudest possible volume or the best possible signal to ambient noise ratio from the speakers **14**A', **16**A'. Thus, by pressing the speakers **14**A', **16**A' against their ears, the perceived volume of the sound emitted from the speakers **14**A', **16**A' and the signal to external noise ratio will be the greatest.

[0116] Alternatively, other users may prefer to have the speakers spaced from the outer surfaces of their ear so as to prevent contact with the ear, yet maintain a close spacing to preserve the perceived volume of the sound emitted from the speakers **14**A', **16**A'. Additionally, a user may occasionally wish to move the speakers **14**A', **16**A' further away from their ears, to allow the wearer to better hear other ambient sounds when the speakers **14**A', **16**A' are not operating.

[0117] For example, a wearer of the audio device **10**A' might wish to use a cellular phone while wearing the audio device **10**A'. Thus, the wearer can pivot one of the speakers **14**A', **16**A' to a maximum outward position (e.g., the solid line illustration of speaker **16**A' in **FIG. 3H**) to allow a speaker of the cell phone to be inserted in the space between the speaker **16**A' and the ear of the wearer. As such, the wearer can continue to wear the audio device **10**A' and use another audio device, such as a cell phone. This provides a further advantage in that, because the audio device **10**A' is in the form of eyeglasses **12**A', which may include prescription lenses or tinted lenses, the wearer of the audio device **10**A' can continue to receive the benefits of such tinted or prescription lenses, as well as audio signal from the other speaker while using the other audio device.

[0118] Any of the audio devices disclosed herein may additionally be provided with a pause, mute, or on/off switch which is activated by the position of the speakers **14**A, **16**A. If the wearer laterally advances one of the speakers from a first position adjacent the ear to a second position, spaced apart from the ear such as to permit the use of a cell phone, the signal to both speakers can be automatically stopped such as to permit use of the cell phone without audio interference. Advancing the speaker from the second position back to the first position thereafter automatically resumes delivery of signal to the speakers **14**A, **16**A.

[0119] An additional advantage is provided where the pivotal movement of the supports **68'**, **70'** is isolated from the translational movement thereof. For example, the connection between the supports **68'**, **70'** and the ear stems **54'**, **56'** can be configured so as to allow a user to pivot the supports **68'**, **70'** without substantially translating the supports **68'**, **70'** forwardly or rearwardly. In one embodiment, the connections can be configured to provide more perceived frictional resistance against translational movement than the frictional resistance against pivotal movement about the pivot axis P (**FIG. 3H**). Thus, a user can easily pivot the speakers **14**A', **16**A' toward and away from their ears without translating the speakers **14**A', **16**A'. Thus, the procedure for moving the speakers **14**A', **16**A' toward and away from a wearer's ears can be performed more easily and, advantageously, with one hand.

[0120] The range of motion S is generally no greater than about 180°, and often less than about 90°. In one preferred embodiment, the range of motion S is no more than about 30° or 40°. The connection between the support **68'**, **70'** and the ear stems **54'**, **56'**, respectively, is generally configured to provide a sufficient holding force for maintaining a rotational orientation of the speakers **14**A', **16**A' about the pivot axis P. For example, the connection between the supports **68'**, **70'** and the ear stems **54'**, **56'**, respectively, can be configured to generate sufficient friction to resist the forces generated by normal movements of a wearer's head.

[0121] A further advantage is achieved where sufficient friction is generated to prevent the pivotal movement of the speakers **14**A', **16**A' when the audio device **10**A' is removed from the wearer and placed on a surface such that the speakers **14**A', **16**A' support at least some of the weight of the audio device **10**A'. For example, when a wearer of the audio device **10**A' removes the audio device **10**A' and places it on a table with the speakers **14**A', **16**A' facing downwardly, the speakers **14**A', **16**A' would support at least some of the weight of the audio device **10**A'. Thus, by providing sufficient friction in the connection between the supports **68'**, **70'** and the ear stems **54'**, **56'**, respectively, the position of the speakers **14**A', **16**A' can be maintained. Thus, when the wearer replaces the audio device **10**A', the speakers **14**A', **16**A' will be in the same position, thereby avoiding the need for the wearer to reposition speakers **14**A', **16**A'.

[0122] As noted above, an aspect of one of the inventions disclosed herein includes the realization that where an electronic device that is worn in the same manner as a pair of eyeglasses includes a user operable switch for controlling a function of the electronics, the comfort of the wearer of the audio device can be enhanced where the switches are operable without transferring a substantial load to the head of the wearer. For example, where the electronic device includes buttons for controlling an aspect of the device, a further advantage is provided where a support surface is provided opposite the button such that a user can apply a balancing force to the actuation force applied to the button, thereby preventing a substantial force from being transferred to the head of the wearer.

[0123] With reference to **FIG. 3I**, the audio device **10**A' can include at least one button **73***a*. In the illustrated embodiment, the audio device **10**A' includes five buttons; a first button **73***a* and a second button **73***b* mounted to the left ear stem **54'**, and a third button **73***c*, a fourth button **73***d*, and a fifth button **73***e* mounted to the right ear stem **56'**. Of course, this is one preferred embodiment of the arrangement of the buttons **73***a*, **73***b*, **73***c*, **73***d*, **73***e*. Other numbers of buttons and other arrangements of buttons are also applicable.

[0124] As shown in **FIG. 3H**, the button **73***a* is mounted on an upwardly facing surface of the ear stem **54'**. Additionally, the ear stem **54'** has a lower surface that faces in a generally opposite direction to the direction towards which the upper surface of the ear stem **54'** faces. Thus, as shown in **FIG. 3H**, the user can use a finger **71** to actuate the button **73***a* and a thumb **69** to counteract the actuation force of the finger **71** by pressing on the lower surface of the ear stem **54'**. As such, the wearer or user of the audio device **10**A' can actuate the button **73***a* without imparting a substantial load to the wearer of the audio device **10**A'.

[0125] This provides a further advantage in that a repeated application of a force against the audio device **10**A' that is transferred to the head of the wearer of the audio device **10**A' is avoided. For example, where the audio **10**A' is in the form of eyeglasses **12**A', a wearer of the eyeglasses **12**A' can be subjected to irritations if the wearer repeatedly presses the eyeglasses **12**A' to actuate a switch. Further, such repeated loads can cause headaches. Thus, by configuring the ear stems **54**A' such that the button **73***a* can be depressed without transferring a substantial load to the wearer of the ear glasses **12**A', such irritations and headaches can be avoided.

[0126] Further, by disposing the button **73***a* on an upper portion of the ear stems **54**A', and by providing the ear stems

54A' with an opposite lower surface that faces an opposite direction relative to the upper surface, a wearer can grasp the ear stems **54**A' from the side, as illustrated in **FIG. 38**, thereby allowing the user to counteract the actuation force required to actuate the button **73***a* without having to insert a finger between a side of the wearer's head and ear stems **54**A'. In any of the embodiments herein, the surface which opposes the buttons may be provided with any of a variety of tactile feedback structures, such as ridges or bumps, that have a predetermined alignment with respect to the buttons. This can assist the user in positioning their thumb in the identical position each time, so that the user, after a learning period, can rapidly reach for the controls, position their hand and identify with which button their fingers are aligned. See, for example, the tactile indicium illustrated in **FIG. 24**.

[**0127**] **FIG. 3J** illustrates an exploded view of an exemplary embodiment of the audio device **10**A'. As shown in **FIG. 3J**, the left side ear stem **54**A' defines an electronic housing portion **250** which defines an internal cavity **252** configured to receive electronic components. The electronics housing **250** includes an upper surface **254** and lower surface **260**. The upper surface **254** extends generally outwardly from the ear stems **54**A' and around the internal cavity **252**. The upper surface also includes apertures **256**, **258** through which buttons **73***a*, **73***b*, respectively, extend.

[**0128**] The housing **250** includes a lower surface **260**. The lower surface **260** (which may contain ridges, apertures or slots) faces in an opposite direction from the upper surface **254** of the housing **250**. Preferably, the lower surface **260** is at least about 0.25 inches, and may be 0.5 inches or 0.75 inches or more wide. As such, the lower surface **260** provides a surface which allows a wearer to easily grasp the ear stem **54**A' so as to balance an actuation force supplied to the button **73***a*, **73***b*.

[**0129**] A cover member **262** cooperates with the housing **250** to define the closed internal cavity **252**. In the illustrated embodiment, the internal cavity **252** includes at least one compartment configured to receive an electronic circuit board **264** which includes at least one switch for each of the buttons **73***a*, **73***b*. In an exemplary but non-limiting embodiment, the board **264** can include two switches, one for each of the buttons **73***a*, **73***b*, which are configured to control a volume output from the speakers **14**A', **16**A'. The cover **262** can be attached to the ear stem **54**A' with any type of fastener, such as, for example, but without limitation, screws, rivets, bolts, adhesive, and the like.

[**0130**] In the illustrated embodiment, the housing **250** also defines a hinge recess **266**. Additionally, the cover member **262** includes a complimentary hinge recess **268**. The recesses **266**, **268** are sized to receive a hinge pin **270**. In the illustrated embodiment, the hinge pin **270** is hollow and includes an aperture therethrough. The ends of the hinge pin **270** are configured to be engaged with corresponding portions of the frame **42'** so as to anchor the position of the hinge pin **270** relative to the frame **42'**. When the cover **262** is attached to the housing **250**, with the hinge pin **270** disposed in the recesses **266**, **268**, the ear stem **54**A' is pivotally mounted to the frame **42'**. The aperture extending through the hinge pin **270** provides a passage through which electrical conduits can pass, described in greater detail below.

[**0131**] The housing **250** also includes a power source recess (not shown). The power source recess includes an opening **272** sized to receive a power storage device **274**. In the illustrated embodiment, the power storage device **274** is in the form of an AAAA-sized battery. Of course, the power storage device **274** can be in the form of any type or any size of battery and can have any shape. However, a further advantage is provided where a standard-sized battery such as an AAAA battery is used. For example, as described in greater detail below, this size battery can be conveniently balanced with other electronic components configured for playback of a sound recording.

[**0132**] A door **276** is configured to close the opening **272**. In the illustrated embodiment, the door **276** is preferably hingedly connected to a housing **250** so as to allow the door to be rotated between an open position and a closed position. **FIGS. 3D-3I** illustrate the door **276** in a closed position.

[**0133**] The right ear stem **56'** includes a housing **280** defining an internal cavity **282** configured to receive at least one electronic component. The housing **280** also includes upper and lower surfaces (unnumbered) that can be configured identically or similarly to the upper and lower surfaces **254**, **260** of the housing **250**. However, in the illustrated embodiment, the upper surface of the housing **280** includes 3 apertures configured to receive portions of the buttons **73***c*, **73***d*, **73***e*. Thus, a further description of the housing **280** is not necessary for one of ordinary skill in the art to make and use the inventions disclosed herein.

[**0134**] The internal cavity **282**, in the illustrated embodiment, is configured to receive electronics such as a printed circuit board **284**. In the illustrated embodiment, the printed circuit board **284** includes one switch for each of the buttons **73***c*, **73***d*, and **73***e*. Additionally, the printed circuit board **284** includes an audio file storage and playback device **286**.

[**0135**] The device **286** can be configured to store and playback any desired type of electronic audio and/or video file. In the illustrated embodiment, the device **286** includes a memory, an amplifier, and a processor. The memory, amplifier, and the processor are configured to operate together to function as an audio storage and playback system. For example, the audio storage and playback system can be configured to store MP3 files in a memory and to play back the MP3 files through the speakers **14**A', **16**A'. Suitable electronics for enabling and amplifying MP3 storage and playback are well known in the art, and may be commercially available from Sigmatel, Inc. or Atmel, Inc. Thus, further description of the hardware and software for operating the device **286** as a storage and playback device is not necessary for one of ordinary skill in the art to make and use the inventions disclosed herein.

[**0136**] Advantageously, the printed circuit board **284** also includes or is in electrical communication with a data transfer port **288**. In the illustrated embodiment, the housing **280** includes an aperture (not shown) disposed in a position similar to the position of the aperture **272** on the housing **250**. In the housing **280**, however, the aperture is aligned with the data transfer port **288**. Thus, when the printed circuit board **284** is received in the internal cavity **282**, the data transfer port **288** is aligned with the aperture.

[**0137**] A door **290** is configured to open and close the aperture through which the data port **288** is exposed. Preferably, the door **290** is hingedly engaged to the housing **280**, in an identical or similar manner as the door **276**. In the

illustrated embodiment, the door **290** can be pivoted relative to housing **280**, thereby exposing the data transfer port **288**. In the illustrated embodiment, the data transfer port is configured to operate according to the universal serial bus (USB) transfer protocol. In one implementation of the invention, the earstem is provided with a mini USB port. The mini USB port enables both downloading of digital music from a source into the eyeglass, as well as charging a rechargeable battery carried by the eyeglass. Optical data ports may alternatively be used. As a further alternative, MP3 files may be uploaded from a source using wireless systems, such as BLUETOOTH® protocols, as is discussed below. Further, the device **286** is configured to receive audio files from another computer, through the data transfer port **288** and to store the files into the memory incorporated into the device **286**.

[**0138**] A cover **292** is configured to close the internal cavity **282**. The cover **292** can be configured in accordance with the description of the cover **262**. Similarly to the housing **250** and cover **262**, the housing **280** and cover **292** include recesses **294**, **296** configured to receive a hinge pin **298**. The hinge pin **298** can be constructed identically or similarly to the hinge pin **270**. Thus, with the hinge pin **298** engaged with a frame **42'**, the cover member **292** can be attached to the housing **280** with the hinge pin **298** received within the recesses **294**, **296**. As such, the ear stem **56**A' can be pivoted relative to the frame **42'**.

[**0139**] With continued reference to **FIG. 3J**, the speakers **14**A', **16**A' can be constructed in a similar manner, as a mirror image of each other. Each of the speakers **14**A', **16**A', include a housing member **300**. Each housing member **300** includes a transducer housing **302**, a support stem **304**, and a guide portion **306**.

[**0140**] The transducer housing portion **302** includes an internal recess **308** (identified in the illustration of speaker **16**A'). The transducer recess **308** can be sized to receive any type of acoustic transducer. For example, but without limitation, the transducer recess **308** can be configured to receive a standard acoustic speaker commonly used for headphones. In a non-limiting embodiment, the speaker transducer (not shown) has an outer diameter of at least about 0.6 inches. However, this is merely exemplary, and other sizes of transducers can be used.

[**0141**] With reference to the illustration of the speaker **14**A', the support stem **304** connects the transducer housing **302** with the guide portion **306**. The support stem **304** includes an aperture therethrough (not shown) which connects the transducer recess **308** with the guide portion **306**.

[**0142**] The guide portion **306** includes an aperture **310** which communicates with the aperture extending through the support stem **304**. Thus, an electric conduit, described in greater detail below, can extend through the aperture **310**, through the stem **304**, and then to the transducer recess **308**.

[**0143**] The guide portion **306** also includes a guide aperture **312**. The guide aperture **312** is configured to receive a guide pin **314**.

[**0144**] The guide pin **314** can be made from any of a variety of materials. In the illustrated embodiment, the guide pin **314** is a rod having an outer diameter of about 0.0625 of an inch. When assembled, the guide pin **314** is disposed within an open recess (not shown) disposed on an under surface of the housing **250**. The aperture **312** is sized so as to slidably receive the pin **314**. Thus, the guide portion **306** can translate relative to the pin **314** as well as rotate relative to the pin **314**. The size of the aperture **312** can be configured to provide a slip fit with sufficient friction to provide the stable positions noted above with reference to **FIGS. 3D-3I**.

[**0145**] In this embodiment, the guide pin **314** and the aperture **312** provide both translational and pivotal movement. Additionally, the guide pin **314** and the aperture **312** can be configured to resistance to both translational movement and pivotal movement, with the resistance to translational movement being greater. For example, the axial length and diameter of the aperture **312**, controls the maximum contact area between the guide pin **314** and the guide portion **306** and thus affects the frictional force generated therebetween. Thus, the length and diameter of the aperture **312** can be adjusted to achieve the desired frictional forces.

[**0146**] Additionally, with reference to **FIG. 3K**, when a translational force X is applied to the speaker **14**A', a torque T is created, which results in reaction forces Xr urging the guide portion **306** against the guide pin **314** at the forward and rearward ends thereof. These reaction forces Xr increase the frictional resistance against the translational movement of the speaker **14**A'. However, as shown in **FIG. 3L**, when a pivot force Θ is applied to the speaker **14**A', such reaction forces are not created, and the speaker **14**A' can pivot about the guide pin **314** with seemingly less force applied as compared to the force X required to move the speaker **14**A' in a direction parallel to the guide pin **314**.

[**0147**] With reference again to **FIG. 3J**, the recess on the lower surface of the housings **250**, **280**, are sized so as to allow the guide portion **306** to slide in a forward to rearward direction in the range Rt, described above with reference to **FIG. 3F**. Additionally, the open recess on the lower surface of the housings **250**, **280** is provided with a width to limit the range of motion S of the speakers **14**A', **16**A', described above with reference to **FIG. 3H**.

[**0148**] With reference to **FIG. 3E**, the frame **42'** includes an interior electrical conduit channel **316** configured to receive an electrical conduit for connecting the speakers **14'**, **16'**, the printed circuit boards **264**, **284**, and the power storage device **274**. For example, with reference to **FIG. 3M**, the buttons **73***a*, **73***b*, are connected to the device **286** through conduits **73***ai*, **73***bi*. The storage device **274** is connected to the device **286** through a power line **274***i*. Additionally, the speaker **14**A' is connected to the device **286** with an audio output conduit **14**Ai'.

[**0149**] As illustrated in **FIG. 3M**, portions of the conduits **73***ai*, **73***bi*, **274***i* and **14**Ai', extend through the channel **316**. In an exemplary embodiment, the conduits **73***ai*, **73***bi*, **274***i*, and **14**Ai', can be in the form of a ribbon connector **318** extending through the channel **316**. Thus, with reference to **FIGS. 3J and 3M**, the ribbon connector **318** can extend from the housing **280**, into the recesses **294**, **296**, through an aperture (not shown) in the hinge pin **298** to the upper opening within the hinge pin **298**, then through the channel **316** (**FIG. 3E**), to an upper opening of the hinge pin **270**, out through an aperture (not shown) through a side of a hinge pin **270**, through the recesses **266**, **268** of the housing **250**, and then to the speaker **14**A', printed circuit board **264**, and the power storage device **274**.

[**0150**] The conduit **14**Ai'can extend to the aperture **310** in the guide portion **306**, through a central aperture of the

support stem **304**, and into the transducer recess **308**, as to connect to a transducer disposed therein. Optionally, the portion of the conduit **14**Ai' that extends out of the housing **250** and into the transducer housing **300** can be formed from an insulated metal conduit, or any other known conduit. The speaker **16**A' can be connected to the printed circuit board **284** in a similar manner.

[**0151**] The buttons **73***c*, **73***d*, **73***e* and the data transfer port **288** are connected to the device **286** through printed conduits incorporated into the printed circuit board **284**.

[**0152**] As noted above, one aspect of at least one of the inventions disclosed herein includes the realization that a desirable balance can be achieved by disposing a power storage device in one ear stem of an eyeglass and play-back device into the second ear stem. Thus, as illustrated in **FIGS. 3J and 3K**, the power storage device **274** is disposed in the left ear stem **54'** and the storage and play-back device **286** is disposed in the right ear stem **56'**.

[**0153**] In the illustrated embodiment, the buttons **73***a* and **73***b* for controlling the volume of the sound output from the speakers **14**A', **16**A'. For example, the button **73***a* can be used for increasing volume and the button **73***b* can be used for decreasing volume. Alternatively, the button **73***b* can be for increasing volume and the button **73***a* can be for decreasing volume. When a wearer of the audio device **10**A' presses one of the buttons **73***a*, **73***b*, a simple on-off signal can be transmitted to the device **286**. The device **286** can be configured to interpret the on-off signals from the buttons **73***a*, **73***b* as volume control signals and adjust the volume to the speakers **14**A', **16**A' accordingly.

[**0154**] Optionally, a third command can be generated by pressing both of the buttons **73***a*, **73***b* simultaneously. For example, but without limitation, the device **286** can be configured to interpret simultaneous signals from both the buttons **73***a*, **73***b*, as a signal for turning on and off an additional feature. For example, but without limitation, the additional feature can be a bass boost feature which increases the bass of the audio signal transmitted to the speakers **14**A', **16**A'. Of course, other functions can be associated with the buttons **73***a*, **73***b*.

[**0155**] The buttons **73***c*, **73***d*, **73***e* can be figured to operate switches to transmit control signals to the device **286** similarly to the buttons **73***a*, **73***b*. For example, but without limitation, the button **73***c* corresponds to a power button. For example, the device **286** can be configured to recognize a signal from the button **73***c* as a power on or power off request. In this embodiment, when the device **286** is off, and a signal from the button **73***c* is received, the device **286** can turn on. Additionally, the device **286**, when in an on state, can be configured to turn off when a signal from the button **73***c* is received. Optionally, the device **286** can be configured to, when in an off or standby state, turn on and begin to play an audio file when a signal from the button **73***c* is received. Additionally, the device **286** can be configured to pause when another signal from the button **73***c* is received. In this embodiment, the device **286** can be configured to turn off only if the button **73***c* is held down for a predetermined amount of time. For example, the device **286** can be configured to turn off if the button **73***c* is held down for more than two seconds or for three seconds or for other periods of time.

[**0156**] The buttons **73***d* and **73***e* can correspond to forward and reverse functions. For example, the button **73***d* can correspond to a track skip function. In an illustrative but non-limiting example, such a track skip function can cause the device **286** to skip to a next audio file in the memory of the device **286**. Similarly, the button **73***e* can correspond to a reverse track skip function in which the device **286** skips to the previous audio file.

[**0157**] Optionally, the buttons **73***d*, **73***e* can be correlated to fast forward and rewind functions. For example, the device **286** can be configured to fast forward through an audio file, and play the corresponding sounds at a fast forward speed, when the button **73***d* is held down and to stop and play the normal speed when the button **73***d* is released. Similarly, the device **286** can be configured to play an audio file backwards at an elevated speed, when the button **73***e* is held down, and to resume normal forward play when the button **73***e* is released. This arrangement of the buttons **73***a*, **73***b*, **73***c*, **73***d*, **73***e* provides certain advantages noted above. However, other arrangements of the buttons **73***a*, **73***b*, **73***c*, **73***d*, **73***e* and the corresponding functions thereof can be modified.

[**0158**] With reference to **FIGS. 4A-4B**, a modification of the audio devices **10**, **10**A, **10**A' is illustrated therein and referred to generally by the reference numeral **10**A". The audio device **10**A" can include the same components as the audio devices **10**, **10**A, **10**A' except as noted below. Components of the audio device **10**A" that are similar to corresponding components of the audio devices **10**, **10**A, **10**A' are identified with the same reference numerals, except that a "'" has been added thereto.

[**0159**] The audio device **10**A" is in the form of a eyeglass **12**A" having a frame **40**A". The audio device **10**A" also includes at least one microphone **75**. Advantageously, the microphone **75** is disposed so as to face toward the wearer.

[**0160**] **FIG. 4B** illustrates a partial cross-sectional view of the eyeglass **12**A" on the head **18** of a wearer. The microphone **75** is schematically illustrated and includes a transducer unit **76**. In the illustrated embodiment, the transducer **76** is disposed within the frame **40**A" and at least one aperture **77** extends from the transducer unit **76** to the outer surface of the frame **40**A". Alternatively, the transducer can be positioned so as to be exposed on the outer surface of the frame **40**A".

[**0161**] Advantageously, the aperture **77** is disposed so as to face toward the head of the user **18**. The illustrated aperture **77** faces downward and toward the head **18** of the wearer. By configuring the aperture to extend downwardly and toward the head **18**, the aperture is disposed as close as possible to the mouth of the wearer while benefiting from the wind protection provided by positioning the aperture **77** on the portion of the frame **40**A' facing toward the head **18**.

[**0162**] Alternatively, the aperture can be positioned so as to extend generally horizontally from the transducer **76** to an outer surface of the frame **40**A", this configuration being illustrated and identified by the numeral **78**. By configuring the aperture **78** to extending generally horizontally toward the head **18**, the aperture **78** is better protected from wind.

[**0163**] As another alternative, the aperture can be configured to extend upwardly from the transducer and toward the head **18**, this configuration being identified by the numeral **79**. By configuring the aperture **79** to extend upwardly from the transducer **76** and toward the head **18**, the aperture **79** is

further protected from wind which can cause noise. However, in this orientation, the aperture **79** is more likely to collect water that may inadvertently splash onto the aperture **79**. Thus, the aperture configuration identified by the numeral **77** provides a further advantage in that water is less likely to enter the aperture **77**. Any water that may enter the aperture **77** will drain therefrom due to gravity.

[**0164**] The microphone **75** can be disposed anywhere on the frame **40**A', including the orbitals **48**A", **50**A", the bridge **52**A", or the ear stems **54**A", **56**A". Optionally, the microphone **75** can be in the form of a bone conduction microphone. As such, the microphone **75** is disposed such that the when a user wears the audio device **10**A', the microphone **75** is in contact with the user's head **18**. For example, but without limitation, the microphone can be positioned anywhere on the anywhere on the frame **40**A', including the orbitals **48**A", **50**A", the bridge **52**A", or the ear stems **54**A", **56**A" such that the microphone contacts the user's head. More preferably, the microphone **75** is positioned such that it contacts a portion of the user's head **18** near a bone, such that vibrations generated from the user's voice and traveling through the bone, are conducted to the microphone. A bone conduction microphone may be built into a nosepad, or into each nosepad, for direct contact with the wearer. In another alternative, the microphone **75** can be configured to be inserted into the meatus **24** (**FIG. 2**) of the ear canal of the user. Thus, in this modification, the microphone **75** can be substituted for one of the speakers **14**, **16**. Alternatively, an ear-canal type bone conduction microphone can be combined with a speaker so as to provide two-way communication with the user through a single ear canal.

[**0165**] Further, the audio device **10**A" can include noise cancellation electronics (not shown) configured to filter wind-generated noise from an audio signal transmitted from the microphone **75**.

[**0166**] **FIG. 5A** illustrates a modification in which the microphone **75** is disposed on the bridge **52**A". Similarly to the configuration illustrated in **FIG. 4B**, the bridge **52**A" can include an aperture **77** which extends downwardly and toward the nose **19** of the wearer, horizontally extending aperture **78**, or an upwardly extending aperture **79**.

[**0167**] Alternatively, the microphone **75** can include a forwardly facing aperture, as illustrated in **FIG. 5B**, and a wind sock **81** disposed over the aperture. The wind sock **81** can be made in any known manner. For example, the wind sock **81** can be made from a shaped piece of expanded foam. Configuring the bridge portion **52**A' as such is particularly advantageous because the bridge portion of an eyeglass is typically somewhat bulbous. A wind sock can be shaped complementarily to the bridge portion **52**A'. Thus, the sock **81** can be made so as to appear to be part of a normal bridge portion of an eyeglass.

[**0168**] The audio device **10**A" can include electrical conduits extending through the frame **40**A" to an audio output jack (not shown). The audio output jack can be disposed at the end of the ear stems **54**A", **56**A", or anywhere else on the frame **40**A". Thus, a user can wear the audio device **10**A' and use the microphone **75** in order to transform the voice of the wearer or other sounds into an electrical signal. The electrical signal can be transmitted to another audio device, such as a palm top computer, a laptop computer, a digital or analog audio recorder, a cell phone, and the like. Additionally, the audio device **10**A" can include speakers, such as the speakers **14**A", **16**A" illustrated in **FIG. 3A**. As such, the audio device **10**A" can be configured to provide two-way audio for the wearer, e.g., audio input being transmitted to the user through the speakers **14**A", **16**A", and audio output being transmitted from the wearer, through the microphone **75**, and out through the audio output jack. As such, a user can use the audio device **10**A" for two-way audio communication in a comfortable manner.

[**0169**] With reference to **FIGS. 6 and 7**, a modification of the audio devices **10**, **10**A, **10**A', **10**A" is illustrated therein and referred to generally by the reference numeral **10**B. Components of the audio device **10**B corresponding to components of the audio devices **10**, **10**A, **10**A', **10**A" are identified with the same reference numerals, except that letter "C" has been added thereto.

[**0170**] The audio device **10**B is in the form of an eyeglass **80**. The eyeglass **80** includes a frame **82**. The frame **82** includes left and right orbitals **84**, **86**. Each of the orbitals **84**, **86** support a lens **88**, **90**. The frame **82** also includes a bridge portion **92**. Similarly to the bridge portion **52** of the audio device **10**A, the bridge portion **92** connects the orbitals **84**, **86**. Additionally, the bridge portion **92** defines an open space **94** configured to receive the nose **19** of a wearer. The inner sides of the orbitals **84**, **86** and/or the bridge portion **92** is configured to support the frames **82** on the nose of a user.

[**0171**] The eyeglass **80** also includes support stems **96**, **98** extending from the upper portions of the orbitals **84**, **86** toward a posterior of a wearer's head. In the illustrated embodiment, the stems **96**, **98** extend along an upper surface of the wearer's head. Thus, the stems **96**, **98**, along with the bridge portion **92**, support the eyeglass **80** on the wearer's head **18**. The support members **28**B, **30**B are comprised of support arms **100**, **102**.

[**0172**] With reference to **FIGS. 5, 6** and **7**, the support arms **100**, **102** extend downwardly from the stems **96**, **98**, respectively. In the illustrated embodiment, the support arms **100**, **102** extend in an "L" shape. In particular, the support arm **100** extends from the stem **96** to a point just forward (anterior) from the tragus of the user's ear **20**. From this point, the support arm **100** extends rearwardly so as to support the speaker **14**B at a position juxtaposed and spaced from the ear **20**. Preferably, the speaker **14**B is maintained in a position from about 2 mm to 3 cm from the tragus of the ear **20**. Similarly to the audio device **10**A, the audio device **10**B can include an audio input through a wired arrangement or through a wireless transceiver.

[**0173**] With reference to **FIGS. 8, 9A**, and **9**B, another modification of the audio device **10** is illustrated therein and referred to generally by the reference numeral **10**C. Similar components of the audio device **10**C have been given the same reference numerals, except that that a "C" has been added thereto.

[**0174**] As illustrated in **FIG. 8**, the audio device **10**C can be worn on the head **18** of a user U. Preferably, the audio device **10**C is configured to provide one or two-way wireless communication with a source device, or the source device can be incorporated into the audio device **10**C. The source device can be carried by the user U, mounted to a moveable object, stationary, or part of a local area or personal area network.

[0175] The user U can carry a "body borne" source device B such as, for example, but without limitation, a cellular phone, an MP3 player, a "two-way" radio, a palmtop computer, or a laptop computer. As such, the user U can use the audio device **10**C to receive and listen to audio signals from the source device B, and/or transmit audio signals to the source device B. Optionally, the audio device **10**C can also be configured to transmit and receive data signals to and from the source device B, described in greater detail below.

[0176] Optionally, the device B can also be configured to communicate, via long or short range wireless networking protocols, with a remote source R. The remote source R can be, for example, but without limitation, a cellular phone service provider, a satellite radio provider, or a wireless internet service provider. For example, but without limitation, the source device B can be configured to communicate with other wireless data networks such as via, for example, but without limitation, long-range packet-switched network protocols including PCS, GSM, and GPRS. As such, the audio device **10**C can be used as an audio interface for the source device B. For example, but without limitation, where the source device B is a cellular phone, the user U can listen to the audio output of the cellular phone, such as the voice of a caller, through sound transducers in the audio device **10**C. Optionally, the user U can send voice signals or commands to the cellular phone by speaking into a microphone on the audio device **10**C, described in greater detail below. Thus, the audio device **10**C may advantageously be a receiver and/or a transmitter for telecommunications.

[0177] In general, the component configuration of **FIG. 8** enables the audio device **10**C to carry interface electronics with the user, such as audio output and audio input. However, the source electronics such as the MP3 player, cellular phone, computer or the like may be off board, or located remotely from the audio device **10**C. This enables the audio device **10**C to accomplish complex electronic functions, while retaining a sleek, low weight configuration. Thus, the audio device **10**C is in communication with the off board source electronics device B. The off board source device B may be located anywhere within the working range of the audio device **10**C. In many applications, the source electronics B will be carried by the wearer, such as on a belt clip, pocket, purse, backpack, shoe, integrated with "smart" clothing, or the like. This accomplishes the function of off loading the bulk and weight of the source electronics from the headset.

[0178] The source electronics B may also be located within a short range of the wearer, such as within the room or same building. For example, personnel in an office building or factory may remain in contact with each, and with the cellular telephone system, internet or the like by positioning transmitter/receiver antenna for the off board electronics B throughout the hallways or rooms of the building. In shorter range, or personal applications, the out board electronics B may be the form of a desktop unit, or other device adapted for positioning within relatively short (e.g. no greater than about 10 feet, no greater than about 20 feet, no greater than about 50 feet, no greater than 100 feet) of the user during the normal use activities.

[0179] In all of the foregoing constructions of the invention, the off board electronics B may communicate remotely with the remote source R. Source R may be the cellular telephone network, or other remote source. In this manner, the driver electronics may be off loaded from the headset, to reduce bulk, weight and power consumption characteristics. The headset may nonetheless communicate with a remote source R, by relaying the signal through the off board electronics B with or without modification.

[0180] Optionally, the audio device **10**C can be configured to provide one or two-way communication with a stationary source device S. The stationary source device can be, for example, but without limitation, a cellular phone mounted in an automobile, a computer, or a local area network.

[0181] With reference to **FIGS. 9A and 9B**, the audio device **10**C preferably comprises a wearable wireless audio interface device which includes a support **12**C supported on the head **18** of a user by the support **26**C and includes an interface device **110**. The interface device **110** includes a power source **112**, a transceiver **114**, an interface **116**, and an antenna **118**.

[0182] The power source **112** can be in the form of disposable or rechargeable batteries. Optionally, the power source **112** can be in the form of solar panels and a power regulator.

[0183] The transceiver **114** can be in the form of a digital wireless transceiver for one-way or two-way communication. For example, the transceiver **114** can be a transceiver used in known wireless networking devices that operate under the standards of 802.11a, 802.11b, or preferably, the standard that has become known as BLUETOOTH™. As illustrated in BLUETOOTH™-related publications discussed below, the BLUETOOTH™ standard advantageously provides low-cost, low-power, and wireless links using a short-range, radio-based technology. Systems that employ the BLUETOOTH™ standard and similar systems advantageously allow creation of a short-range, wireless "personal area network" by using small radio transmitters. Consequently, with BLUETOOTH™-enabled systems and similar systems, components within these systems may communicate wirelessly via a personal area network. Personal area networks advantageously may include voice/data, may include voice over data, may include digital and analogue communication, and may provide wireless connectivity to source electronics. Personal area networks may advantageously have a range of about 30 feet; however, longer or shorter ranges are possible. The antenna **118** can be in the form of an onboard antenna integral with the transceiver **114** or an antenna external to the transceiver **114**. In another implementation, the transceiver **114** can support data speeds of up to 721 kilo-bits per second as well as three voice channels.

[0184] In one implementation, the transceiver **114** can operate at least two power levels: a lower power level that covers a range of about ten yards and a higher power level. The higher level covers a range of about one hundred yards, can function even in very noisy radio environments, and can be audible under severe conditions. The transceiver **114** can advantageously limit its output with reference to system requirements. For example, without limitation, if the source electronics B is only a short distance from audio device **10**C, the transceiver **114** modifies its signal to be suitable for the distance. In another implementation, the transceiver **114** can switch to a low-power mode when traffic volume becomes low or stops.

[0185] The interface **116** can be configured to receive signals from the transceiver **114** that are in the form of digital or analog audio signals. The interface **116** can then send the audio signals to the speakers **14**C, **16**C through speaker lines **120**, **122**, respectively, discussed in greater detail below.

[0186] Optionally, the audio device **10**C can include a microphone **124**. Preferably, the support **12**C is configured to support the microphone **124** in the vicinity of a mouth **126** of a user. As such, the support **12**C includes a support member **128** supporting the microphone **124** in the vicinity of the mouth **126**.

[0187] The microphone **124** is connected to the interface **116** through a microphone line **130**. Thus, the transceiver **114** can receive audio signals from the microphone **124** through the interface **116**. As such, the audio device **10**C can wirelessly interact with an interactive audio device, such as a cellular phone, cordless phone, or a computer which responds to voice commands. The microphone **124** can also be in any of the forms discussed above with reference to the microphone **75**.

[0188] As noted above with reference to the audio device **10** in **FIGS. 1 and 2**, by configuring the support **12**C to support the speakers **14**C, **16**C in a position juxtaposed and spaced from the ears **20**, **22** of the head **18**, the audio device **10**C provides enhanced comfort for a user.

[0189] One embodiment of an input data management system **600** in accordance with the present invention is schematically illustrated in **FIG. 8A**. The data management system **600** includes a wearable electronic interface **601** for providing data from one or more selected data sources to the wearer. The interface **601** is in communication with a primary data source **602** and optionally at least one secondary source **604**. Communication between the primary source **602** and any secondary source **604** and the interface **601** is accomplished via at least one communication link **606**. In one embodiment, the wearable electronic interface **601** is in communication with one, two, three, or n secondary sources **604**.

[0190] In general, the data input management system is configured to allow a user to select one or more data sources, to be placed either simultaneously or one at a time into electrical communication with a single user interface. This allows the wearer to obtain the benefits of multiple input sources, without the need to replace or make any changes to the interface. As will be discussed in greater detail below, the user may select only a single data source for connection to the interface. Alternatively, the user may select one source as a primary input source and a second source as the secondary input source. The interface may toggle between the input sources, to provide input to the user either automatically, or in response to demand by the user or other electronic prioritization system.

[0191] The primary source **602** and secondary source **604** may be any source, conduit, or provider of audio, video or audio/video information selected by the wearer or by the manufacturer. The examples identified below will therefore be designated generically as source electronics. For example, the source electronics may include a computing device, such as a computer, a server, a network, drive, RAM, ROM or other non-removable or removable memory chip.

[0192] The source electronics may alternatively comprise a digital audio player, such as an mp3 player, an IPOD®, or a multimedia player such as a portable DVD player where the audio track is to be routed to the support.

[0193] Any of a variety of current electronic devices can be converted into wireless source electronics for use in the present system. For example, a device such as a portable DVD player is conventionally provided with internal speakers and a headphone jack for enabling wired connection to an external headphone. The portable DVD player can be converted for use as a source in the system of the present invention by providing a Bluetooth or other radio frequency transmitter and power supply in a small housing, provided with an externally projecting plug of a size corresponding to the earphone jack. The converter can be plugged into the external earphone or external speaker jack of any conventional source of electrical signal, and convert the source into a Bluetooth or other RF enabled signal source for use with the interface with the present invention.

[0194] The source electronics may be a microphone or a radio, such as a terrestrial-based or satellite-based radio, including XM® or SIRIUS® brand satellite radios. In other embodiments, the source electronics may be a telephone, a cellular telephone, a personal digital assistant (PDA), a BLACKBERRY®, or a pager. A variety of currently available devices, for example, a BLACKBERRY®, pager, any of a variety of PDA's and e-mail enabled devices such as notebook computers provide incoming text messages. In one aspect of the present invention any of these text message devices is provided with text to voice software, enabling the text to be read out loud. This enables the user to listen to a primary source such as music, or the sound track from a portable DVD player, and incoming e-mails will be read out loud to the wearer, while the primary source is either placed on pause, or remains running in the background. Text to voice software can either be carried by the support, or carried by the underlying source such as the BLACKBERRY® or other PDA.

[0195] In other embodiments, the source electronics may be a two-way radio, a CB-radio, a NEXTEL® telephone, a cordless telephone, or a walkie-talkie.

[0196] In alternate embodiments, the source electronics includes a time measuring device, such as a clock or a timer. In another embodiment, the source electronics may be a sensor for measuring a body biometric, such as a wearer's pulse, temperature, or blood parameter such as blood oxygen saturation, blood glucose level or blood pressure. The sensor may be configured to provide an alarm, or a signal indicative of a time, or a sensed biometric to a wearer when certain threshold levels are measured, or during periodic intervals. Such thresholds and periodic intervals may be selected or programmed by the wearer, or may be preset.

[0197] The sensor type of source electronics may sense the position or orientation of the head, arms, legs, eyes, or other body part of the wearer of the wearable electronic interface **601**. For example, in one embodiment, the sensor determines the direction in which the wearer is looking by sensing the position of the wearer's eyes. Such techniques are well known to those of skill in the art, and include methods of measuring reflected light off of a wearer's eye.

[0198] In another embodiment, the sensor of the source electronics measures distance or determines position or

location. For example, the source electronics may include a global positioning system (GPS) or an altimeter. Such sensors may be used to determine the distance from an object, including the distance from a location, distance traveled from a starting point, or the distance to a target. Such distance sensors may also be configured to provide an alarm, or a signal indicative of a distance to a wearer when certain threshold levels are measured, or during periodic intervals. For example, a runner may select a music source (e.g. MP3) as the primary source, and a GPS distance traveled device as the secondary source. This allows the runner to listen to music in the background. When a preprogrammed reporting milestone has been reached, the GPS device interrupts the music to report the desired data. For example, at the appropriate time, the GPS device might interrupt the music to report to the wearer "You have completed 5 miles. Average time is 5 minutes and 45 seconds per mile." Reportable events from any source electronics designated as a secondary source can be given a priority to interrupt the primary source and report the event to the wearer.

[0199] The sensor may measure a time-varying parameter, such as speed, acceleration, or jerk (e.g., the rate of change in acceleration). The sensor may provide a signal indicative of an instantaneous or an average time-varying parameter at fixed, or at user-selectable intervals. For example, in one embodiment, the primary source **602** includes a GPS receiver and a clock and calculates velocity by dividing a measurement of distance traveled (as provided by the GPS receiver) by a measurement of time elapsed (as provided by the clock).

[0200] The source electronics may be external to the wearable electronic interface **601**, as illustrated in **FIG. 8A**, in which case the communication link **606** may either be a direct electrical coupling (for example hard wiring, or inductive coupling through the body), or wireless.

[0201] Wireless source electronics may be infrared enabled or radiofrequency-communication enabled, such as BLUETOOTH enabled. For example, in one embodiment, the source includes a BLUETOOTH enabled cellular telephone, although any of the source electronics described herein may be radiofrequency-communication enabled.

[0202] The source electronics may alternatively be carried by or internal to (carried in a cavity or alternatively embedded within) the wearable electronic interface **601**. For example the primary source **602** may include a digital audio player, such as an mp3 player or other memory device, which is attached to or located within the frame of a pair of eyeglasses. Electronically-enabled eyewear as a wearable electronic interface **601** is described in greater detail herein. The secondary source may be a cell phone, GPS device or other external device which is in radio communication as needed, with the interface. The primary and secondary sources can both be completely contained on the wearable interface, such as built into or carried by a pair of eyewear.

[0203] The source electronics may provide substantially discrete packets of information, or may provide a substantially continuous stream of information to the wearable electronic interface **601**. Information packet sizes may be varied depending upon the communication link **606** used to transfer information from the source to the wearable electronic interface **601**.

[0204] In further embodiments, the source electronics may include a video source, or an audio/video source. For example, in one embodiment, the source includes a camera for real time viewing of a remote location or viewing direction, or a video playback device such as a DVD or VCR or solid state video storage device. The source electronics may alternatively be a tuner, a television receiver, or any other device capable of providing a signal indicative of still or moving images. In one embodiment, the primary source **602** provides a photograph, a video clip, an email, a videomail or a voicemail message in accordance with any of the embodiments described herein.

[0205] Any of the source electronics identified above can be selected as the primary source **602** or secondary source **604**. The secondary source **604** communicates with the wearable electronic interface **601** via a communication link **606** as well. Secondary source **604** and primary source **602** may also include any content source **302** described in greater detail below with respect to **FIG. 21**.

[0206] The communication link **606** is any device, technology or information conduit for providing communication between two or more electronic components. For example, in one embodiment, the communication link **606** includes a physical connection, such as a wire, cable, fiberoptic cable, or trace on a PC board. Such communication links **606** include USB, serial, RS-232, IEEE-1394, and FIREWIRE cables.

[0207] In another embodiment, the communication link **606** includes a wireless coupling, such as radiofrequency (RF), infrared (IR), acoustic, or optical coupling. Such communication links **606** include BLUETOOTH and other wireless communications protocols and their associated hardware, as is well known to those of skill in the art. Communication link **606** includes any communications link **306** described in greater detail below with reference to **FIG. 21**.

[0208] Referring again to **FIG. 8A**, in one embodiment, the system **600** comprises a wearable electronic interface **601**. In one embodiment, the wearable electronic interface **601** is any electronic device that may be worn by a wearer, and that provides an interface between an information source, such as primary source **602** and secondary source **604**, and the wearer.

[0209] In one embodiment, the wearable electronic interface **601** is electronically enabled eyewear including audio, video or audio-video interface capabilities such as described in greater detail elsewhere herein. However, wearable electronic interface **601** may be any wearable device, and may be in the form of any wearable support structure, including a wristwatch, armband, jewelry, headwear and clothing. Examples of such wearable. electronic interface **601** clothing include headphones, ear phones, a hat, helmet, goggles, mask, visor, headband, hair band, shirt, scarf, sweater, jacket, belt, pants, vest, etc.

[0210] The wearable electronic interface **601** generally includes a data port **608**, a selector **610**, and an audio output **612**. In addition, in some embodiments, the wearable electronic interface **601** further includes a video output **614**, an audio input **616**, and/or a video input **618**.

[0211] The data port **608** is any device capable of receiving information from a primary source **602** (or secondary source **604**) via its associated communication link **606**. For example, in one embodiment, the data port **608** is a physical

connector such as a mini-USB connector depending upon the nature of the communication link **606**. In such embodiment, the primary source **602** or secondary source **604** might be coupled to the wearable electronic interface **601** via a USB cable having a mating mini-USB connector on at least one of its ends. In another embodiment, the data port **608** includes a wireless transceiver for providing wireless communication between the primary source **602** (or secondary source **604**) and the wearable electronic interface **601**. For example, in one embodiment, the data port **608** includes a BLUETOOTH receiver or transceiver. The data port **608** includes any data port **308** described in greater detail below with respect to **FIG. 22**.

[**0212**] In one embodiment, the data port **608** is able to communicate with multiple source devices **602**, **604**, either simultaneously, sequentially or serially. For example, in one embodiment, the data port **608** is a BLUETOOTH transceiver that is configured to communicate with more than one BLUETOOTH enabled source device (e.g., a telephone and an mp3 player).

[**0213**] Outputs from data port **608** are provided to a selector **610**, which selects the source to be provided to the wearer of the wearable electronic interface **601** at any particular time. The selector **610** may be any of a variety of switching devices suitable for switching between multiple electronic input sources.

[**0214**] The selector **610** may include a mechanical, electrical, or an electro-mechanical switch. For example, in one embodiment, the selector **610** includes a manually operable control such as a toggle switch, a rocker switch, a jumper, a dial, a button, a knob, or a combination thereof. In another embodiment, the selector **610** includes an electronically operable control such as a transistor, a bank of transistors, a relay, a circuit, logic, a RAM, a ROM, a PLD, an EPROM, an EEPROM, a microprocessor, a microcontroller, a multiplexor, a demultiplexor, or a combination thereof. In addition, the selector **610** may be a voice-activated switch, or a voice-activated control that controls selection between primary and secondary sources **602**, **604** based upon verbal commands provided by the wearer.

[**0215**] The selector **610** may also be coupled to an audio output **612**, a video output **614**, an audio input **616**, and a video input **618** depending upon the desired functionality of the system. The audio output **612** includes any device suitable for providing an audio signal to the wearer of the wearable electronic interface **601**. For example, the audio output **612** may include a speaker, including a bone conduction speaker, a buzzer, a beeper, an alarm, or any other device that produces an audible signal.

[**0216**] The selector **610** may be located on the wearable electronic interface **601**, or may be remote from it. For example, in one embodiment, the wearable electronic interface **601** includes a pair of electronically enabled eyeglasses, and the selector **610** comprises a manually activated control such as a button or touch pad located on an earstem, an orbital or the bridge, or on a remote associated component such as the cell phone or a wristwatch. Any other wearable electronic interface **601** or selector **610** location may be utilized.

[**0217**] The video output **614** includes any device suitable for providing a video signal to the wearer of the selector **610**. For example, in one embodiment, the video output **614** includes a light, a lamp, an LED, or any of a variety of image displays such as a screen, a display, a monitor, a head-mounted display, or any other device that produces a visible signal or image.

[**0218**] The audio input **616** of the wearable electronic interface **601** includes any device suitable for converting an audible signal into an electronic signal that can be processed or carried by the wearable electronic interface **601**. For example, in one embodiment, the audio input **616** includes a microphone, including a bone conduction microphone.

[**0219**] The video input **618** of the wearable electronic interface **601** includes any device suitable for converting an image, or visual information into an electronic signal that can be processed or carried by the wearable electronic interface **601**. For example, in one embodiment, the video input **618** includes a camera, a still camera, or a video camera. See generally U.S. Pat. No. 6,349,001 to Spitzer, entitled Eyeglass Interface System, the disclosure of which is incorporated in its entirety herein by reference.

[**0220**] In one embodiment, during operation, the wearer of the wearable electronic interface **601** manually selects which input source **602**, **604** is placed in communication with the interface output. The wearer can switch input sources by activation of the selector at any time. In another embodiment, the wearable electronic interface **601** automatically selects the particular input source **602**, **604** for communication based upon a prioritization schedule configured by the wearer.

[**0221**] In one embodiment of manual selection operation, the primary source **602** coupled to the wearable electronic interface **601** is an mp3 player, and the secondary source **604** is a BLUETOOTH enabled cellular telephone. In this embodiment, the wearer listens to mp3 audio provided by the primary source **602** through audio output **612** (e.g., speakers) coupled to the wearable electronic interface **601**. Various embodiments of such wearable electronic interfaces **601** containing or carrying mp3 or other digital audio players are discussed in greater detail herein.

[**0222**] In manual selection operation, when a telephone call is received via a secondary source **604**, the secondary source **604** sends a signal or an alarm to the wearer to inform the wearer that an incoming call is occurring. The signal or alarm may be an audio signal provided by the audio output **612**, it may be a visual signal, such as a flashing light, provided by the video output **614**, a conventional vibrator or cell phone "ring" or it may be a combination of signals. In one embodiment, the signal includes caller identification information.

[**0223**] If the wearer determines that he would like to answer the incoming telephone call, the wearer activates the selector **610** using any mechanism described above. For example, in one embodiment, the wearer presses a button on the selector **610** to accept the incoming call from the secondary source **604**, and to simultaneously pause, stop, mute, or partially decrease the playback volume from the primary source **602**.

[**0224**] When the selector **610** is activated, information from the secondary source **604** is provided through the associated communication link **606** and data port **608** to the selector **610**. The selector **610** routes the communication

from the secondary source **604** to the audio output **612** so that the wearer can hear the incoming call without having to remove or adjust the wearable electronic interface **601**.

[**0225**] In addition, the selector **610** includes sufficient logic to know that when an incoming telephone call is being received from a source **602**, **604**, the audio input **616** (e.g., microphone) of the wearable electronic interface **601** will be activated to provide communication from the wearer back to the secondary source **604**. Similarly, if the source electronics selected by the user carries video signals, the selector **610** additionally activates the video display carried by the eyeglasses or other support structure. If the source electronics selected by the user or automatically by the selector **610** includes only an audio signal, the microphone and video display, if present, remain dormant.

[**0226**] When the telephone call is terminated, the wearable electronic interface **601** may be configured to resume playback of the mp3 file, to increase the playback volume to previous levels, or to take no further action. The wearer may customize wearable electronic interface **601** operation as desired.

[**0227**] One example of automatic operation of the input selectable system **600** is illustrated in the method **620** of **FIG. 8B**. In the illustrated example, at step **622**, the wearer of the wearable electronic interface **601** listens to an mp3 file through audio output **612** (e.g., speakers) coupled to the wearable electronic interface **601**.

[**0228**] In this example, an mp3 player is the primary source **602**, although any source electronics discussed above may alternatively be used. Although not illustrated in **FIG. 8B**, in the present example, a BLUETOOTH enabled cellular telephone is coupled to the wearer's wearable electronic interface **601** as a secondary source **604**.

[**0229**] At step **624**, the selector **610** determines whether or not an interrupt signal is being received. In one embodiment, an interrupt signal is provided by a secondary source **604** when the secondary source **604** desires to communicate with the wearer. If an interrupt signal is not being provided by a secondary source **604**, the method **620** returns to step **622**, and the wearable electronic interface **601** continues without interruption providing mp3 audio to the wearer via the audio output **612**.

[**0230**] However, if an incoming telephone call is being received by a secondary source **604** (e.g, the cellular telephone), the secondary source **604** sends an interrupt signal to the selector **610** of the wearable electronic interface **601**. The selector **610** receives the interrupt signal from the secondary source **604**, and determines that an incoming telephone call is being received. The method **620** then proceeds to step **626**.

[**0231**] At step **626**, the selector **610** compares a priority setting associated with the primary source **602** and secondary source **604**. If the selector **610** determines that the secondary source **604** does not have priority over the primary source **602**, the method **620** returns to step **622**, and the wearable electronic interface **601** continues providing mp3 audio to the wearer without interruption via the audio output **612**. However, if the selector **610** determines that the secondary source **604** has priority over the primary source **602**, the method **620** continues to step **628**.

[**0232**] In one embodiment, each possible primary source **602** and secondary source **604** has a priority setting associated with that source **602**, **604**. Priority settings for each source **602**, **604** may be described by a priority schedule, which may be saved within, or loaded into the wearable electronic interface **601** via any programming method known.

[**0233**] For example, in one embodiment, the wearer customizes operation by downloading settings from a computer to the wearable electronic interface **601**. In another embodiment, the wearable electronic interface **601** is customized by programming via a telephone keypad, voice to text software, BLACKBERRY, or by pressing buttons or selectors on the wearable electronic interface **601**.

[**0234**] At step **628**, the playback volume of the primary source **602** (e.g., the mp3 player) is reduced or the source placed on pause, as selected by the wearer of the wearable electronic interface **601**. During this step **628**, the wearer may optionally be provided an alarm signal and the opportunity to either accept the incoming call, or to reject it.

[**0235**] For example, at step **628**, the wearable electronic interface **601** may provide the wearer with caller identification information received from the secondary source **604**. The wearer may then decide, based upon the identity of the caller, whether or not to accept the incoming call. Thus, in one embodiment the user selects a music source as the primary source **602**, and may select a cellular telephone as the secondary source **604**, with an override capability to enable interruption of the music to reveal the source of the incoming phone call. During device configuration, such as in communication with a notebook or desktop computer, the user may be allowed to input the names associated with each of the key telephone numbers from which the user may anticipate receiving a call.

[**0236**] In use, the wearer may be listening to music from the primary source when an incoming phone call is received. If the incoming call is from a number which has been preprogrammed into the system, the override function allows the name of the caller or other information associated with that incoming phone number to be presented audibly over the speakers. The wearer can then elect whether to accept the call, such as by pressing a button on the user interface, activating the phone by voice command, or other initiating mechanism. When the phone call has ended, the user may press a button or activate another control, disconnecting the telephone and resuming listening to data from the primary source.

[**0237**] Whether or not the wearer has the ability to prevent a priority, secondary source **604** from interrupting the primary source **602** may be configured based upon the user environment. For example, in a commercial or industrial environment, the primary source **602** may include an mp3 player, and the secondary source **604** may include a paging system, or telephone intercom system. In such embodiment, a wearer of a wearable electronic interface **601**, such as a production-line worker, security guard, office employee, etc., may use the wearable electronic interface **601** to listen to mp3 audio or other entertainment. However, when a caller, such as a supervisor, a customer, or other priority individual attempts to contact the wearer via the secondary source **604**, the wearable electronic interface **601** automati-

cally accepts the incoming communication request, and allows the caller to communicate with the wearer as discussed herein.

[0238] At step **630**, the selector **610** changes the input to the wearable electronic interface **601** from the primary source **602** to the secondary source **604** to facilitate communication between the wearer of the wearable electronic interface **601** and the caller.

[0239] The method **620** then continues to step **632**, where the telephone call between the wearer and caller occurs. During this step **632**, the selector **610** provides audio received from the secondary source **604** (e.g., the cellular telephone) to the audio output **612** (e.g., speakers) of the wearable electronic interface **601**, and provides audio received from the audio input **616** (e.g., microphone) of the wearable electronic interface **601** to the secondary source **604**.

[0240] At step **634** the telephone call is terminated, and the method **620** returns to step **622**. At step **622**, the wearable electronic interface **601** resumes mp3 audio playback as was occurring prior to receiving the telephone call from the secondary source **604**.

[0241] With reference to **FIGS. 10-12**, a modification of the audio device **10**C is illustrated therein and identified generally by the reference numeral **10**D. The components of the audio device **10**D which are the same as the components in the audio devices **10**, **10**A, **10**B, and **10**C are identified with the same reference numerals, except that a letter "D" has been added.

[0242] In the audio device **10**D, the microphone **124**D can be disposed in the frame **42**D. In particular, the microphone **124**D can be disposed in the bridge portion **52**D. Alternatively, the microphone **124**D can be disposed along a lower edge of the right orbital **50**D, this position being identified by the reference numeral **124**D'. Further, the microphone could be positioned in a lower edge of the left orbital **48**D, this position being identified by the reference numeral **124**D". Optionally, two microphones can be disposed on the frame **42**D at both the positions **124**D' and **124**D". Similarly to the microphone **75**, the microphones **124**D', **124**D" preferably are positioned so as to face toward the user. Thus, the microphones **124**D', **124**D" can be protected from wind and noise. The microphones **124**D, **124**D', **124**D" can also be constructed in accordance with any of the forms of the microphone **75** discussed above with reference to **FIGS. 4A, 4B**, 5A, 5B.

[0243] With reference to **FIG. 12**, the interface device **110**D can be disposed in one of the ear stems **54**D, **56**D. Optionally, the components of the interface device **110**D can be divided with some of the components being in the ear stem **54**D and the remaining components in the ear stem **56**D, these components being identified by the reference numeral **110**D'. Preferably, the components are distributed between the ear stems **54**D, **56**D so as to provide balance to the device **10**D. This is particularly advantageous because imbalanced headwear can cause muscle pain and/or headaches. Thus, by distributing components of the interface device **110**D between the ear stems **54**D, **56**D, the device **10**D can be better balanced.

[0244] In one arrangement, the transceiver **114**, interface **116**, and the antenna **118** can be disposed in the left ear stem **54**D with the battery **112** being disposed in the right ear stem **56**D. This arrangement is advantageous because there are numerous standard battery sizes widely available. Thus, the devices within the ear stem **54**D can be balanced with the appropriate number and size of commercially available batteries disposed in the ear stem **56**D.

[0245] In another arrangement, the lenses **44**D, **46**D can include an electronic variable light attenuation feature, such as, for example, but without limitation, a dichroic dye guest-host device. Additionally, another user operable switch (not shown) can be disposed in the ear stem **56**D. Such a user operable switch can be used to control the orientation, and thus the light attenuation provided by, the dichroic dye.

[0246] Optionally, a further power source (not shown) for the dichroic dye guest-host device can also be disposed in the ear stem **56**D. For example, the rear portion **162** of ear stem **56**D can comprise a removable battery. Such a battery can provide a power source for controlling the orientation of the dichroic dye in the lenses **44**D, **46**D. In this modification, the additional user operable switch disposed in the ear stem **56**D can be used to control the power from the battery supplied to the lenses **44**D, **46**D.

[0247] The appropriate length for the antenna **118**D is determined by the working frequency range of the transceiver **114**. Typically, an antenna can be approximately 0.25 of the wave length of the signal being transmitted and/or received. In one illustrative non-limiting embodiment, such as in the BLUETOOTH™ standard, the frequency range is from about 2.0 gigahertz to 2.43 gigahertz. For such a frequency range, an antenna can be made with a length of approximately 0.25 of the wavelength. Thus, for this frequency range, the antenna can be approximately 1 inch long.

[0248] With reference to **FIG. 12**, the antenna can be formed at a terminal end of one of the ear stems **54**D, **56**D. In the illustrated embodiment, the antenna **118**D is disposed at the terminal end of the left ear stem **54**D.

[0249] In this embodiment, approximately the last inch of the ear stem **54**D is used for the antenna **118**D. The antenna **118**D can be made of any appropriate metal. The antenna can be connected to the transceiver **114** with a direct electrical connection, an inductive connection, or a capacitive connection.

[0250] With reference to **FIG. 13**, an inductive type connection is illustrated therein. As shown in **FIG. 13**, the antenna **118**D comprises an inner conductive rod **140** and a coil **142** wrapped helically around the rod **140**. The coil **142** is connected to the transceiver **114** in a known manner.

[0251] The ear stems **54**D, **56**D can be made from a conductive metal material. Where metal is used, near the terminal end of the ear stem **54**D, the metal material is reduced relative to the outer surface of the stem **54**D. The coil member is wrapped around the rod **140** and an insulative material **144** is disposed over the coil **142** so as to be substantially flush with the remainder of the ear stem **54**D. Thus, the smooth outer appearance of the ear stem **54**D is maintained, without comprising the efficiency of the antenna **118**D.

[0252] With reference to **FIG. 14**, a modification of the antenna **118**D is illustrated therein and identified by the

reference numeral **118**D'. Components of the antenna **118**D' which were the same as the antenna **118**D illustrated in **FIG. 13**, have been given the same reference numeral, except that a "'" has been added.

[**0253**] The antenna **118**D' and the stem **54**D includes a thin outer layer **146** of a metal material. As known in the antenna arts, it is possible to dispose a thin layer of metal over an antenna without destroying the antenna's ability to transmit and receive signals. This design is advantageous because if the device **10**D is constructed of a metal material, including metal such as, for example, without limitation, sintered titanium or magnesium, the thin outer layer **146** can be formed of this material so that the appearance of the device **10**D is uniform.

[**0254**] Where the stem **54**D is made from a metal material, the antennas **118**D, **118**D' illustrated in **FIGS. 13 and 14** provide an additional advantage in that electrons in the ear stem **54**D can be excited by the signal applied to the coil **142**. Thus, the ear stem **54**D itself becomes part of the antenna **118**D, **118**D', and thus can provide better range and/or efficiency for the transmission and reception of signals. Furthermore, if the ear stem **54**D is electrically coupled to the frame **42**D, the frame **42**D would also become excited in phase with the excitations of the antenna **118**D, **118**D'. Thus, the ear stem **54**D and the frame **42**D would effectively become part of the antenna, thereby allowing transmission and reception from two sides of the head of the user.

[**0255**] Optionally, the ear stem **56**D could also be electrically coupled to the frame **42**D. Thus, the stem **56**D would also become part of the antenna **118**D, **118**D', thereby allowing transmission and reception of signals on three sides of the user's head. Thus, where at least a portion of a frame of an eyeglass is used as the antenna for the wireless transceiver **114**, the audio device benefits from enhanced antenna efficiency.

[**0256**] Optionally, the antenna **118**D, **118**D' can be isolated from the remainder of the stem **54**D via an insulator **146**, thereby preventing interference between the antenna and other devices on the audio device **10**D. As such, the remainder of the device **10**D can be made from any material, such as, for example, but without limitation, a polymer.

[**0257**] Preferably, the audio device **10**D includes a user interface device **150** configured to transmit user input signals to the interface **116** and/or the transceiver **114**. In the illustrated embodiment, the user interface device **150** is in the form of a 3-way button. The 3-way button **152** is configured to have three modes of operation. Firstly, the button **152** is mounted to pivot about a rocker axis **154**. Thus, in one mode of operation, the button **152** can be depressed inwardly on a forward end **156** of the button **152**, thereby causing the button **152** to pivot or "rock" about the pivot axis **154**. Additionally, the button **152** can be pressed at a rearward end **158**, thereby causing the button **152** to pivot about the pivot axis **154** in the opposite direction. Additionally, the button **152** can be mounted so as to be translatable in the medial-lateral direction, identified by the reference numeral **160** (**FIG. 11**). Appropriate springs can be provided beneath the button **152** to bias the button in an outward protruding and balanced position. Appropriate contacts can be mounted beneath the button **152** so as to be activated individually according to the modes of operation.

[**0258**] In one illustrative and non-limiting embodiment, the button **152** can be used to control volume. For example, by pressing on the forward portion **156**, a contact can be made causing the transceiver **114** or the interface **116** to increase the volume of the speakers **14**D, **16**D. Additionally, by pressing on the rearward portion **158** of the button **152**, the transceiver **114** or interface **116** could lower the volume of the speakers **14**D, **16**D.

[**0259**] In a further illustrative and non-limiting example, the medial-lateral movement of the button **152**, along the directions identified by the arrow **160**, can be used to choose different functions performed by the transceiver **114** or the interface **116**. For example, an inward movement of the button **152** could be used to answer an incoming phone call where the audio device **10**D is used as an audio interface for a cellular phone.

[**0260**] Optionally, the power source **112** can comprise portions of the ear stems **54**D, **56**D which have been formed into batteries. For example, the rear portions **160**, **162** of the ear stems **54**D, **56**D, respectively, can be in the form of custom made batteries, either disposable or rechargeable. Preferably, the rear portions **160**, **162** are removable from the forward portions of the ear stems **54**D, **56**D. This provides a particular advantage in terms of balance. As noted above, imbalanced loads on the head can cause muscular pain and/or headaches. In particular, excessive pressure on the nose can cause severe headaches. Additionally, batteries can have a significantly higher mass density than plastic and lightweight metals, such as sintered titanium or magnesium. Thus, by constructing the rearward portions **160**, **162** of the ear stems **54**D, **56**D of batteries, the weight of these batteries can improve forward-rearward balance of the audio device **10**D in that the weight of the interface device **110** can be offset by the batteries. In another embodiment, the ear stems **54**D, **56**D can define a housing for removable batteries.

[**0261**] The audio device **10**D can also include power contacts **164** for recharging any rechargeable batteries connected thereto. For example, the power contacts **164** can be disposed on a lower edge of the orbitals **48**D, **50**D. Thus, with an appropriate recharging cradle (not shown), the audio device **10**D can be laid on the cradle, thereby making contact between the power contacts **164** and corresponding contacts in the cradle (not shown). Alternatively, power contacts can be provided in numerous other locations as desired. For example, the power contacts **164** can be disposed at the ends of the ear stems **54**D, **56**D. A corresponding cradle can include two vertically oriented holes into which the ear stems are inserted for recharging. In this configuration, the lens within the orbitals **48**D, **50**D would face directly upwardly.

[**0262**] In another alternative, the power contacts **164** are disposed on the upper edges of the orbitals **48**D, **50**D. In this configuration, the audio device **10**D is laid in a cradle in an inverted position, such that the contacts **164** make electrical contact with corresponding contacts in the cradle. This position is advantageous because it prevents weight from being applied to the supports **28**D, **30**D. This prevents misalignment of the speakers **14**D, **16**D.

[**0263**] With reference to **FIGS. 8, 9A**, and **9**B, in another embodiment, the audio device **10**C is advantageously adapted to support any of a variety of portable electronic circuitry or devices which have previously been difficult to

incorporate into conventional headsets due to bulk, weight or other considerations. For example, but without limitation, the electronics are digital or other storage devices and retrieval circuitry such as for retrieving music or other information from MP3 format memory or other memory devices. The audio device **10**C can carry any of a variety of receivers and/or transmitters, such as transceiver **114**. For example, but without limitation, the audio device **10**C can carry receivers and/or transmitters for music or for global positioning. In another example, the audio device **10**C can carry receivers and/or transmitters for telecommunications (e.g., telecommunications devices). As used herein, the term "telecommunications devices" is intended to include telephone components as well as devices for communicating with a telephone. For example, "telecommunications devices" can include one or more transceivers for transmitting an audio signal to a cellular phone to be transmitted by the cellular phone as the speaker's voice, and/or for receiving an audio signal from a cellular phone representing a caller's voice. Of course, other audio, video, or data signals can be transmitted between the audio device **10** C and such a cellular phone through such transceivers.

[**0264**] In other embodiments, drivers and other electronics for driving heads-up displays, such as liquid crystal displays or other miniature display technology can also be carried by the audio device **10**C. The power source **112** can be carried by the audio device **10**C. For example, without limitation, the power source **112** can advantageously be replaceable or rechargeable. Other electronics or mechanical components can additionally be carried by the audio device **10**C. In other embodiments, the audio device **10**C can also be utilized solely to support any of the foregoing or other electronics components or systems, without also supporting one or more lenses in the wearer's field of view. Thus, in any of the embodiments of the audio devices disclosed herein, the lenses and/or lens orbitals can be omitted as will be apparent to those of skill in the art in view of the disclosure herein.

[**0265**] In another embodiment, a further modification of the audio devices **10**, **10**A, **10**B, **10**C, and **10**D is provided wherein the audio devices include at least two banks of microphones, with one bank acting as a speaker of received and one bank providing an ambient noise-cancellation function. The microphone banks can be positioned at any suitable location or combination of locations (e.g., on the audio device, within the audio device, opposing sides of the audio device, or the like). In one embodiment, automatic switching of the speaking-microphone and noise-canceling-microphone banks' functions advantageously enhances ease of use. In a further embodiment, the microphone banks can be arranged in an array to be used in conjunction with algorithms to discern, reduce, and/or eliminate noise for the purpose of voice recognition. For example, in one embodiment, such microphone banks can include ASIC-based noise-canceling technology, such as is available in chips from Andrea Electronics Corporation (AEC), to enable voice recognition in ambient noise up to about 130 Db or more. In another embodiment, microphone banks can be arranged in any suitable combination of linear or non-linear arrays to be used in conjunction with algorithms to discern, reduce, and/or eliminate noise in any suitable manner. In another embodiment, audio/proximity sensors can advantageously trigger the appropriate functionality in a specific bank. In another embodiment, a noise-canceling microphone can be provided in connection with a cord or other microphones described above. For example, without limitation, a series of miniature microphones can be supported down a cord from the audio device, separated by desired distances, and aimed in different directions. In another implementation, one or more of the microphones can be for verbal input from the user, and one or more others of the microphones, or the same microphone, can also be for noise-cancellation purposes.

[**0266**] With reference to **FIGS. 8, 9A**, and **9**B, in another embodiment, the transceiver **114** is adapted to employ a wide variety of technologies, including wireless communication such as RF, IR, ultrasonic, laser or optical, as well as wired and other communications technologies. In one embodiment, a body-LAN radio is employed. Other embodiments can employ a flexible-circuit design. Many commercially available devices can be used as transceiver **114**. For example, without limitation, Texas Instruments, National Semiconductor, Motorola manufacture and develop single RF transceiver chips, which can use, for example, 0.18 micron, 1.8 V power technologies and 2.4 GHz transmission capabilities. Of course, a variety of transceiver specifications are available and usable, depending on the particular embodiment envisioned. In another implementation, other commercially available products operating at 900 MHz to 1.9 GHz or more can be used. Data rates for information transfer to wearable or other type computing devices will vary with each possible design. In a preferred implementation, a data rate is sufficient for text display. RF products, and other products, ultimately will be capable of updating a full-color display and have additional capabilities as well. Thus, heads-up displays, such as liquid crystal displays or other miniature display technology described above can be employed.

[**0267**] In another embodiment, a further modification of the audio devices **10**, **10**A, **10**B, **10**C, and **10**D is provided wherein the audio devices can include and/or communicate with a variety of sensors, including but not limited to motion, radar, heat, light, smoke, air-quality, oxygen, CO and distance. Medical monitoring sensors are also contemplated. Sensors can be directed inwardly toward the user's body, or outwardly away from the body (e.g., sensing the surrounding environment). Sensors in communication with the audio devices also can be strategically positioned or left behind to facilitate the communication of sensed information. For example, a firefighter entering a burning building can position sensor to communicate the smoke and heat conditions to that firefighter and to others at the sensor-drop location. Remote sensors can also be relatively fixed in position, as in the case of a maintenance worker wearing an audio device that receives various signals from sensors located in machines or other equipment for which the worker is responsible. A blind wearer of audio device can employ a distance sensor to determine distance to surrounding objects, for example, or a GPS unit for direction-finding. Other exemplary sensing capabilities are disclosed on one or more of the following, all of which are incorporated by reference herein: U.S. Pat. No. 5,285,398 to Janik, issued Feb. 9, 1994; U.S. Pat. No. 5,491,651 to Janik, issued Feb. 13, 1996; U.S. Pat. No. 5,798,907 to Janik, issued Aug. 25, 1998; U.S. Pat. No. 5,581,492 to Janik, issued Dec. 3, 1996; U.S. Pat. No. 5,555,490 to Carroll, issued Sep. 10, 1996; and U.S. Pat. No. 5,572,401 to Carroll, issued Nov. 5, 1996.

[0268] With reference to **FIGS. 15 and 16**, a further modification of the audio devices **10**, **10**A, **10**B, **10**C, and **10**D, is illustrated therein and identified generally by the reference numeral **10**E. Components that are similar or the same as the components of the audio devices **10**, **10**A, **10**B, **10**C, and **10**D, have been given the same reference numerals, except that a "E" has been added thereto.

[0269] The audio device **10**E includes a microphone boom **180** extending downwardly from the lower end of the support arm **100**E. The microphone **124**E is disposed at the lower end of the microphone boom **180**.

[0270] In the illustrated embodiment, the audio device **10**E can include the interface device **110**E at an upper portion of the stem **96**E. In particular, the interface device **110**E can be disposed at the point at which the support arm **100**E connects to the stem **96**E. Optionally, certain components of the interface device **110**E can be disposed at a rear portion of the stem **96**E, this position being identified by the reference numeral **110**E'.

[0271] In this embodiment, the antenna **118**E can be disposed in the frame **82**E, the stem **96**E, the support arm **100**E, or the microphone boom **180**E. However, as noted above, it is preferable that at least a portion of the support **12**E is used as the antenna. More preferably, the support **12**E is made from a metal material, such that at least a portion of the support **12**E is excited by the antenna and thereby forms part of the antenna.

[0272] The transceiver **114** can be in the form of a digital wireless transceiver for one-way or two-way communication. For example, the transceiver **114** can be configured to receive a signal from another transmitter and provide audio output to the speakers **14**, **14**A, **14**B, **14**C, **14**D, **14**E, **16**, **16**A, **16**B, **16**C, **16**D, **16**E. Alternatively, the transceiver **114** can be configured to receive an analog audio signal from microphone **75**, **124**, **124**D, **124**E, convert the signal to a digital signal, and transmit the signal to another audio device, such as, for example, but without limitation, a cell phone, a palm top computer, a laptop computer or an audio recording device.

[0273] The over-the-head configuration of the audio device **10**E advantageously allows distribution of the load across a wearer's head, as well as positioning of relatively bulky or heavy electronics along the length of (e.g., inside) the audio device **10**E or at the posterior aspect of the audio device **10**E such as at the occipital end of the audio device **10**E. This enables the audio device **10**E to carry electronic equipment in a streamlined fashion, out of the wearer's field of view, and in a manner which distributes the weight across the head of the wearer such that the eyewear tends not to shift under the load, and uncomfortable pressure is not placed upon the wearer's nose, ears or temple regions.

[0274] In this embodiment, additional functional attachments may be provided as desired anywhere along the length of the frame, lenses or orbitals of the audio device **10**E. For example, earphones may be directed towards the wearer's ear from one or two earphone supports extending rearwardly from the front of the eyeglass, down from the top of the audio device **10**E or forwardly from the rear of the audio device **10**E. Similarly, one or more microphones may be directed at the wearer's mouth from one or two microphone supports connected to the orbitals or other portion of the audio device **10**E.

[0275] With reference to **FIGS. 17 and 18**, a communication protocol between the audio device S, B and the transceiver **114** is described. In this embodiment, the transceiver **114** is configured for one-way communication. The transceiver includes a receiver and decoder **202** and a digital-to-audio converter **204**.

[0276] As noted above with reference to **FIG. 8**, the audio device S, B can be any one of a number of different audio devices. For example, but without limitation, the audio device S, B can be a personal audio player such as a tape player, a CD player, a DVD player, an MP3 player, and the like. Alternatively, where the transceiver **114** is configured only to transmit a signal, the audio device S, B can be, for example, but without limitation, an audio recording device, a palm top computer, a laptop computer, a cell phone, and the like.

[0277] For purposes of illustration, the audio device S, B will be configured only to transmit a signal to the transceiver **114**. Thus, in this embodiment, the audio device S, B includes an MP3 player **206** and an encoder and transmitter **208**. An antenna **210** is illustrated schematically and is connected to the encoder and transmitter **208**. As an illustrative example, the MP3 player **206** outputs a signal at 128 kbps (NRZ data). However, other data rates can be used. The encoder and transmitter **208** is configured to encode the 128 kbps signal from the MP3 player and to transmit it through the antenna **210**. For example, the encoder and transmitter **208** can be configured to transmit the encoded signal on a carrier signal centered on 49 MHz.

[0278] The receiver and decoder **202** can be configured to receive the carrier signal of 49 MHz through the antenna **118**, decode the digital signal, and transmit the digital signal to the digital-to-audio converter **204**. The digital-to-audio converter **204** can be connected to the speakers **14**,**16** and thereby provide an audio output that is audible to the user.

[0279] With reference to **FIG. 18**, the 128 kbps signal from the MP3 player **206** is identified by the reference numeral **212**. In one embodiment, the encoder and transmitter **208** can be configured to encode the signal **212** from the MP3 player **206**. The encoded signal from the encoder and transmitter **208** is identified by reference numeral **216**.

[0280] The encoder and transmitter **208** can be configured to encode each pulse **214** of the signal **212** into a pattern of pulses, one pattern being identified by the reference numeral **218**.

[0281] In the lower portion of **FIG. 18**, signal **220** represents an enlarged illustration of the portion of the signal **216** identified by a circle **222**. As shown in **FIG. 18**, the pattern **218** is comprised of a series of 50 MHz and 48 MHz signals.

[0282] With reference to **FIG. 19**, a more detailed illustration of the transceiver **114** is illustrated therein. As shown in **FIG. 19**, the transceiver includes a preamplifier **230**, a band pass filter **232**, and an amplifier **234** connected in series. The preamplifier **230** and the amplifier **234** can be of any known type, as known to those of ordinary skill in the art. The band pass filter **232**, in the present embodiment, can be constructed as a band pass filter that allows signals having a frequency from 48 MHz to 50 MHz, inclusive, to pass therethrough. Alternatively, the band pass filter **232** can include three band pass filters configured to allow frequencies centered on 48 MHz, 49 MHz, and 50 MHz, respectively, pass therethrough.

[0283] The transceiver **114** also includes a signal detector **236** and a system clock circuit **238**. The signal detector **236** comprises three signal detectors, e.g., a 49 MHz detector **240**, a 48 MHz detector **242** and a 50 MHz detector **244**. The 49 MHz detector **240** is connected to a carrier detector **246**. As is schematically illustrated in **FIG. 19**, when the signal detector **236** detects a 49 MHz signal, which corresponds to a state in which no audio signal is being transmitted from the MP3 player **206**, the carrier detector **246** causes the transceiver **114** to enter a sleep mode, schematically illustrated by the operation block **248**.

[0284] As the detectors **242**, **244** detect 48 MHz and 50 MHz detectors, respectively, they output signals to a spread spectrum pattern detector **250**. The spread spectrum pattern detector outputs a corresponding signal to a serial-to-parallel converter **252**. The output of the serial-to-parallel converter **252** is output to a digital-to-analog converter **204**. A "class D" audio amplifier (not shown), for example, but without limitation, can be connected to the output of the digital-to-audio converter **204** to thereby supply an audio signal to the speakers **14**, **14**A, **14**B, **14**C, **14**D, **14**E, **16**, **16**A, **16**B, **16**C, **16**D, **16**E. It is to be noted that the encoding performed by the encoder and transmitter **208** can be in accordance with known signal processing techniques, such as, for example, but without limitation, CDMA, TDMA, FDM, FM, FSK, PSK, BPSK, QPSK, M-ARYPSK, MSK, etc. In this embodiment, the transceiver **114** can operate with a single channel.

[0285] With reference to **FIG. 20**, a dual channel transceiver **114***i* is schematically illustrated therein. In this modification, the transceiver **114***i* is configured to simultaneously receive two signals, one signal centered on 46 MHz, and a second signal centered on 49 MHz. Thus, the transceiver **114***i* includes four band-pass filters. The first filter **253** is configured to allow a signal at 45.9 MHz plus or minus 100 kHz to pass therethrough. A second filter **254** is configured to allow signals at 46.1 MHz plus or minus 100 kHz to pass therethrough. The third filter **255** is configured to allow signals at 48.9 MHz plus or minus 100 kHz to pass therethrough. A fourth filter **256** is configured to allow signals at 49.1 MHz plus or minus 100 kHz to pass therethrough. As such, the transceiver **114** can receive two simultaneous signals, as noted above, one being centered at 46 MHz and one being centered at 49 MHz. Thus, this modification can be used to receive two audio signals simultaneously, for example, left and right signals of the stereo audio signal.

[0286] Each of the transceivers **114**, **114***i*, illustrated in **FIGS. 17-20**, can be configured to receive one pattern **218**, a plurality of different signals **218** or only one unique pattern **218**. Additionally, as known in the art, the transceiver **114** or **114***i* and the encoder **208** can include pseudo random generators which vary the pattern **218** according to a predetermined sequence. Thus, the receiver and decoder **202** can be configured to auto synchronize by recognizing a portion of the predetermined sequence.

[0287] In an application where the transceiver **114** operates according to the BLUETOOTH™ standards, the transceiver **114** communicates with the transmitter according to a spread spectrum protocol so as to establish communication in a short range wireless environment with the minimal risk of interference with other devices. For example, the transceiver **114** can communicate with a BLUETOOTH™ enabled MP3 player, or other audio device. The audio device **10**C can receive the output signal from the BLUETOOTH™ enabled MP3 player, and then output the audio signals to the interface **116**. Optionally, the signal can be a stereo signal. The interface **116** can then direct the left and right audio signals to the speakers **14**, **14**A, **14**B, **14**C, **14**D, **14**E, **16**, **16**A, **16**B, **16**C, **16**D, **16**E through the speaker lines **120**, **122**.

[0288] In accordance with the BLUETOOTH™ standard, for example, but without limitation, the transceiver **114** can operate in a half duplex mode in which signals are transmitted in only one direction. For example, at any one moment, the transceiver **114** can only either receive signals and direct them to the speakers **14**, **14**A, **14**B, **14**C, **14**D, **14**E, **16**, **16**A, **16**B, **16**C, **16**D, **16**E or transmit signals, for example, from the microphone **75**, **124**, **124**D, **124**E to another device through the antenna **118**, **118**D, **118**D'. Alternatively, the transceiver **114** can be configured to operate in a full duplex mode in which simultaneous of audio signals are received and transmitted to the speakers **14**, **14**A, **14**B, **14**C, **14**D, **14**E, **16**, **16**A, **16**B, **16**C, **16**D, **16**E and simultaneously audio signals from the microphone **75**, **124**, **124**D, **124**E are transmitted through the antenna **118**, **118**D, **118**D' to a cooperating wireless device.

[0289] Further, the interface **116** can include a processor and a memory for providing added functionality. For example, the interface **116** can be configured to allow a user to control the cooperating wireless device, such as a cell phone. In an illustrative, non-limiting embodiment, where the transceiver **114** is a BLUETOOTH™ device, the interface **116** can be configured to support a hands-free protocol, as set forth in the BLUETOOTH™ hands-free protocol published Oct. 22, 2001, the entire contents of which is hereby expressly incorporated by reference. Optionally, the interface **116** can be configured to comply with other protocols such as, for example, but without limitation, general access profile, service discovery application profile, cordless telephony profile, intercom profile, serial port profile, headset profile, dialup networking profile, fax profile, land access profile, generic object exchange profile, object push profile, file transfer profile, and synchronization profile, published Oct. 22, 2001, the entire contents of each of which being hereby expressly incorporated by reference. Additionally, the "Specification of the Bluetooth System, Core", version 1.1, published Feb. 22, 2001 is hereby expressly incorporated by reference.

[0290] The headset profile is designed to be used for interfacing a headset having one earphone, a microphone, and a transceiver worn by the wearer, for example, on a belt clip, with a cordless phone through a wireless connection. According to the headset profile, certain commands can be issued from a headset, such as the audio devices **10**, **10**A, **10**A', **10**B, **10**C, **10**D, and **10**E, using an AT command protocol. In such a protocol, text commands must be input to the BLUETOOTH™ device, which the BLUETOOTH™ device then transmits wirelessly to a synchronized BLUETOOTH™ enabled device. Such commands include, for example, but without limitation, initiating a call, terminating a call, and redialing a previously dialed number.

[0291] With reference to **FIG. 9A**, the interface electronics **116** can include audio or aural menus that can be selected by user. For example, a user can initiate an audio menu by

depressing the button **150** (**FIGS. 10-12**). Upon initiation of the audio menus, the interface electronics **116** can send an audio signal to the speakers **14**, **14**A, **14**B, **14**C, **14**D, **14**E, **16**, **16**A, **16**B, **16**C, **16**D, **16**E including a humanoid voice. The voice signal can indicate that a first menu option is available. For example, but without limitation, the first menu choice can be to initiate a call. Thus, when the user pushes the button **150** the first time, the user will hear the words "initiate a call," emanating from the speakers **14**, **14**A, **14**B, **14**C, **14**D, **14**E, **16**, **16**A, **16**B, **16**C, **16**D, **16**E. If the user wishes to initiate a call, the user can depress the button **150** again which will send the appropriate AT command to the transceiver **114** so as to transmit the proper AT code to the cellular phone source device S, B (**FIG. 8**).

[**0292**] The user can be provided with further convenience if there are other menu choices available, for example, if the user does not wish to choose the first menu option, the user can depress either the forward or rearward portions **156**, **158** of the button **150** so as to "scroll" through other audio menu options. For example, other audio menu options can include, for example, but without limitation, phonebook, email, clock, voice commands, and other menu options typically available on cellular phones and/or personal audio devices such as MP3 players.

[**0293**] As an illustrative, but non-limiting example, if a user wishes to access the phonebook, the user can depress the button **150** to initiate the audio menu, then "scroll" to the phonebook by depressing the portions **156** or **158** until the user hears the word "phonebook" in the speakers **14**, **14**A, **14**B, **14**C, **14**D, **14**E, **16**, **16**A, **16**B, **16**C, **16**D, **16**E. Once the user hears the word "phonebook," the user can depress the button **150** again to enter the phonebook. Thereafter, the user can depress the portions **156**, **158** to "scroll" through phonebook entries. As the user scrolls through the phonebook entries, the interface **116** can be configured to cause the cellular phone to scroll through the phonebook and thereby transmit an audio signal of a humanoid voice indicating entries in the phonebook. When the user hears the name of the person or entity which the user desires to call, the user can again push the button **150** to initiate a call to that entity.

[**0294**] In this embodiment, the cell phone can be configured with a text-to-voice speech engine which generates a humanoid voice corresponding to entries of the phonebook. Such speech engines are known in the art and are not described further herein.

[**0295**] A text-to-speech engine can provide further convenient uses for a user. For example, if the cell phone or other source device is configured to receive email, the device can be configured to signal the user with an audio signal that an email has been received. The user can send a signal to the source device so as to open the email. The text-to-speech engine can be configured to read the email to the user. Thus, a user can "listen" to email through the audio device **10**, **10**A, **10**A', **10**B, **10**C, **10**D, **10**E, without manually operating the source device.

[**0296**] A further option is to allow a user to respond to such an email. For example, the user could record an audio file, such as, for example, but without limitation a .WAV, .MP3 file as an attachment to a reply email. For such a feature, the interface **116** can be configured to automatically provide a user with options at the end of an email that is read to the user. For example, after the text-to-speech engine finishes "reading" the email to the user, the interface device **116** can enter another audio menu. Such an audio menu can include a reply option, a forward option, or other options. If a user wishes to reply, the user can "scroll" until the user hears the word "reply." Once the user hears the word "reply" the user can depress the button **150** to enter a reply mode. As noted above, these types of commands can be issued using an AT command protocol, to which the source device will also be configured to respond. As noted above, one audio menu option can include voice command. For example, when a user chooses the voice command option, the interface electronic **116** can reconfigure to send an AT command to the source device, such as a cellular phone, to accept voice commands directly from the transceiver **114**. Thus, as the user speaks, the audio signal is directed to the source device, which in turn is configured to issue audio indicators back to the user, through the speakers **14**, **14**A, **14**B, **14**C, **14**D, **14**E, **16**, **16**A, **16**B, **16**C, **16**D, **16**E, to guide the user through such a voice command.

[**0297**] For example, if a user chooses a voice command option, the user could issue commands such as, for example, but without limitation, "phonebook" or "call alpha." With a source device such as a cellular phone, that has a speech recognition engine and that is properly trained to recognize the voice of the user, the user can automatically enter the phonebook mode or directly call the phonebook listing "alpha," of course, as is apparent to one of ordinary skill in the art, such a voice command protocol could be used to issue other commands as well.

[**0298**] In another alternative, the interface electronics **116** can include a speech recognition engine and audio menus. In this alternative, the interface electronics **116** can recognize speech from the user, convert the speech to AT commands, and control this source device using a standard AT command protocol.

[**0299**] For example, but without limitation, the source device B can be in the form of a palm-top or hand-held computer known as a BLACKBERRY™. The presently marketed BLACKBERRY™ devices can communicate with a variety of wireless networks for receiving email, phone calls, and/or internet browsing. One aspect of at least one of the present inventions includes the realization that such a hand-held computer can include a text-to-speech engine. Thus, such a hand-held computer can be used in conjunction with any of the audio devices **10**, **10**A, **10**A', **10**B to allow a user to "hear" emails, or other text documents without the need to hold or look at the device B. Preferably, the hand-held computer includes a further wireless transceiver compatible with at least one of the transceivers **114**, **114***i*. As such, a user can use any of the audio devices **10**C, **10**D, **10**E to "hear" emails, or other text documents without the need to hold or look at the device B. Thus, a presently preferred hand-held computer, as a non-limiting example, includes a BLACKBERRY™ hand-held device including long range wireless network hardware for email and internet browsing capability, a BLUETOOTH™ transceiver for two-way short range audio and/or data audio communication, and a text-to-speech engine.

[**0300**] Preferably, the transceiver **114** is configured to transmit signals at about 100 mW. More preferably, the transceiver **114** is configured to transmit signals at no more than 100 mW. As such, the transceiver **114** uses less power.

This is particularly advantageous because the power source **112** can be made smaller and thus lighter while providing a practicable duration of power between charges or replacement of the power source **112**.

[**0301**] An audio network **300** in accordance with another embodiment of the present invention is illustrated in **FIG. 20**. Audio network **300** includes a content source **302** coupled to an audio device **304** via communications link **306**. The content source **302** is any of a variety of information sources, including, but not limited to, radio stations and/or signals, a satellite radio source, a computer, a network, a storage device, such as a hard drive, a memory card, or a USB (Universal Serial Bus) drive, an audio component (e.g., a stereo receiver, a CD player, a tuner, an MP3 player, a digital audio player, etc.), a database, and/or a communications-enabled device, such as a telephone (including a BLUETOOTH enabled telephone), a PDA, a BLACKBERRY, the Internet, or the like. The content provided by the content source **302** may be any of a variety of information, including but not limited to, audio files, entertainment, news, media, music, photos, videos, advertising, etc.

[**0302**] The audio device **304** may be any of the audio devices described above with respect to **FIGS. 1-19**, or may include any of the audio devices described below. In one embodiment, audio device **304** is electronically enabled eyewear, as discussed herein. Audio device **304** is coupled to content source **302** via communications link **306**. Communications link **306** may be any of a variety of information conduits known to those of skill in the art, including: a cable, a wire, a conductor, a bus, an RF signal, a radio signal, a satellite signal, a BLUETOOTH signal, etc. In one embodiment, the communications link **306** includes a USB, mini-USB, USB-to-mini-USB, FIREWIRE, IEEE 1394, RS232, SCSI, or any other cable. In one embodiment, the communications link **306** is temporarily attached to the audio device **304** for the transfer of content from the content source **302** to the audio device **304**. In another embodiment, the communications link **306** is a retractable cable mounted at least partially inside of the audio device **304**.

[**0303**] In one embodiment, the audio network **300** is configured for the downloading of music from the content source **302** (e.g., a user's computer) to the audio device **304**. In another embodiment, the audio network **300** is configured for the uploading of content stored within the audio device **304** to the content source **302**.

[**0304**] One embodiment of the audio device **304** is illustrated in **FIG. 21**. Audio device **304** generally includes a data port **308**, data interface **310**, processor **312**, digital-to-analog converter **314**, speaker drivers **316**, and speakers **318**. In addition, audio device **304** generally also includes a control interface **320**, user controls **322**, display/indicator drivers **324**, display/indicators **326**, power module **328**, and memory module **330**; however, any one or more of these components may be combined. For example, in one embodiment, data interface **310**, control interface **320**, display/indicator drivers **324**, digital-to-analog converter **314**, and speaker drivers **316** are combined with processor **312** into a single component.

[**0305**] Data port **308** is any of a variety of ports, connectors, jacks, interfaces, or receivers for wireless or wire-based coupling of audio device **304** with communications link **306**. For example, in one embodiment, data port **308** is a mini-USB connector. In other embodiments, the data port **308** may be, by way of example, a USB connector, a FIREWIRE connector, an IEEE 1394 cable connector, an RS232 connector, a JTAB connector, an antenna, a wireless receiver, a radio, an RF receiver, a BLUETOOTH receiver, or the like. Data port **308** generally includes an optional protective door (not illustrated) to protect the data port **308** from dirt, moisture, water, snow, etc., when the audio device **304** is disconnected from the communications link **306**.

[**0306**] In one embodiment, content is loaded from the content source **302** to the audio device **304** via the data port **308** at a data transfer rate. The data transfer rate will generally vary depending upon several factors, including the data port **308** selected, the content source **302**, and the communications link **306**. In one embodiment, the data transfer rate is about 1.5 Mbps (e.g., 10^6 bits per second). In other embodiments, the data transfer rate may be, by way of example, at least about 12 Mbps, 100 Mbps, 200 Mbps, 400 Mbps, 480 Mbps, or the like. In yet another embodiment, the data transfer rate is greater than about 100 Mbps, 200 Mbps, 400 Mbps, or 1000 Mbps. In another embodiment, the data transfer rate is less than about 100 Mbps, or 50 Mbps.

[**0307**] Data interface **310** couples data port **308** with processor **312**. In one embodiment, data interface **310** is a memory buffer for storing information or content received via data port **308** until it is processed by processor **312**. Processor **312** controls the overall function and operation of audio device **304**, and couples directly or indirectly to the various electronic components of the audio device **304**, as described herein. In one embodiment, processor **312** is a digital signal processor (DSP), firmware, microprocessor, microcontroller, field-programmable gate array (FPGA), and/or an application-specific integrated circuit (ASIC). Processor **312** may also be upgradeable. For example, in one embodiment, processor **312** is firmware, and software executable by the processor **312** may be changed, uploaded, downloaded, deleted, and/or modified.

[**0308**] In one embodiment the processor **312** is adapted to function as a digitized audio coder/decoder (CODEC). For example, the processor **312** may be a decoder, such as the STA013, STMP34xx, STMP35xx, or STMP13xx manufactured by SigmaTel. The processor **312** is generally capable of decoding variable bit rate, constant bit rate, or any other bit rate format of compressed digital audio files. In one embodiment, processor **312** is a 75 MHz DSP with an 18-bit sigma-delta digital-to-analog converter.

[**0309**] In other embodiments, processor **312** may process any of a variety of compressed and non-compressed digital audio formats, including but not limited to: Pulse Code Modulation (PCM), Differential Pulse Code Modulation (DPCM), Adaptive Differential Pulse Code Modulation (ADPCM), Advanced Audio Coding (AAC), RAW, Delta Modulation (DM), Resource Interchange File Format (RIFF), Waveform Audio (WAV), Broadcast Wave Format (BWF), Audio Interface/Interchange File Format (AIFF), Sun Audio (AU), SND, Compact Disc Audio (CDA), Moving Pictures Experts Group (MPEG), including MPEG-1, MPEG-2, MPEG-2.5, MPEG-4, MPEG-J, MPEG 2-ACC, and layers 1, 2, and 3 (e.g., MP3), MP3Pro, Audio Compression/Expansion (ACE), Macintosh Audio Compression/Expansion (MACE), including MACE-3 and MACE-6, Audio Code Number 3 (AC-3), Adaptive Transform Acous-

tic Coding (ATRAC), ATRAC3, Enhanced Perceptual Audio Coder (EPAC), Transform-Domain Weighted Interleave Vector Quantization (Twin VQ or VQF), Windows Media Audio (WMA), WMA with DRM, Digital Theatre Systems (DTS), DVD Audio, Super Audio Compact Disc (SACD), Transparent Audio Compression (TAC), SHN, OGG (including Ogg Vorbis, Ogg Tarkin, and Ogg Theora), Advanced Streaming Format (ASF), Liquid Audio (LQT), QDesign Music Codec (QDMC), A2b, Real Audio (including the .ra, .rm, and Real Audio G2 and RMX formats), Fairplay, Quicktime, Shockwave (SWF), Perfect Clarity Audio (PCA), or the like. Processor **312** may also be adapted to process not only existing digital audio formats, but also digital audio formats that may be developed in the future.

[**0310**] The processor **312** is generally able to process encoded, digitized audio data that has been encoded at a particular data encoding rate. For example, in one embodiment, the processor **312** decodes encoded audio data that has been encoded at a data encoding rate of about 8 kilobits per second (e.g., "kbps"). In other embodiments, processor **312** decodes encoded audio data that has been encoded at a data encoding rate of, by way of example, at least about 128 kbps, 160 kbps, 192 kbps, 256 kbps, or the like. In other embodiments, the processor **312** decodes encoded audio data that has been encoded at a data encoding rate of less than about 128 kbps, 160 kbps, 192 kbps, 256 kbps, or the like. In yet another embodiment, the processor **312** decodes encoded audio data that has been encoded at a data encoding rate of more than about 256 kbps.

[**0311**] In another embodiment, the processor **312** decodes encoded data at a decoding rate of about 8 kilobits per second ("kbps"). In other embodiments, the processor **312** decodes encoded data at a decoding rate of, by way of example, at least about 128 kbps, 160 kbps, 192 kbps, 256 kbps, or the like. In another embodiment, the processor **312** decodes encoded audio data at a decoding rate of less than about 128 kbps. In yet another embodiment, the processor **312** decodes encoded audio data at a decoding rate of more than about 256 kbps.

[**0312**] The digital-to-analog converter **314** is generally adapted to output an analog signal based upon an input digital signal. In one embodiment, the digital-to-analog converter **314** is an 8-bit digital-to-analog converter. In other embodiments, digital-to-analog converter **314** is, by way of example, a 16-bit, 24-bit, 32-bit, 64-bit digital-to-analog converter, or the like, although any number of bits may be used. In one embodiment, the digital-to-analog converter **314** is an 18-bit, sigma-delta digital-to-analog converter. The digital-to-analog converter **314** may be integrated with the processor **312**, or may be discrete from the processor **312**.

[**0313**] Speaker drivers **316** are generally amplifiers that amplify an analog signal received from the digital-to-analog converter **314** and send the amplified signal to the speakers **318**. Speakers **318** convert the signal received from the speaker drivers **316** to an audible signal that may be sensed by the user of the audio device **304**. In one embodiment, the speakers **318** are made from Mylar, but may be made from other materials, including: polypropylene, aluminum-coated polypropylene, aramid, graphite-injected polypropylene, honeycomb-laminate, kapton, kaladex, polybenzoxozole, polycarbonate, polyetherimide, pulp paper, silk, silver film, thermalum, urethane, and/or any other material familiar to those of skill in the art.

[**0314**] In one embodiment, the speakers **318** have an input impedance of about 16 Ohms. In other embodiments the speakers **318** have an input impedance of no greater than about 2, 4, 8, or 32 Ohms. In one embodiment, the input impedance is less than about 16 Ohms, and in another embodiment it is greater than about 8 Ohms. In another embodiment, the input impedance is no less than about 100, 200, 400 or 600 Ohms. In one embodiment, the input impedance is about 300 Ohms or about 600 Ohms.

[**0315**] The control interface **320** generally includes a buffer, register, pre-processor, transistor, resistor and/or other electronic circuit to enable the processor **312** to receive commands from a user via the user controls **322**. In one embodiment, the control interface **320** is integrated with the processor **312**.

[**0316**] In one embodiment, the user controls **322** include a button, dial, switch, lever, sensor, touchpad, microphone, and/or any other input device that may be used by a user to control the audio device **304**. In one embodiment, the user controls **322** include a microphone that receives a voice command. The user controls **322** may be responsive to any biometric provided by a user to control the audio device **304**. For example, in one embodiment, the audio device **304** may monitor eye movement, and control the audio device **304** based upon blinking of the user's eyes.

[**0317**] In other embodiments, user controls **322** are used to perform any one or a combination of various functions with respect to an audio data file. For example, user controls **322** may be used to fast-forward, skip, cue, play, pause, turn power on or off, rewind, review, adjust volume, balance, tone, bass, or treble, randomize file selection, load a playlist, set a playlist, delete a playlist, repeat playback of all audio files, selected audio files, or a playlist, or perform any other function related to an audio data file.

[**0318**] The display/indicator drivers **324** are generally amplifiers or other drivers known to those of skill in the art, useful for driving or activating display/indicators **326**. In one embodiment, the display/indicator drivers **324** receive signals from the processor **312** and generate drive signals to turn on or off display elements of the display/indicators **326**. In one embodiment, the display/indicators **326** include an LED, LCD, light, tone, sound, beep, vibration, or other such display or indicator, or other indicators known to those of skill in the art. In one embodiment, the display/indicators **326** indicate a song selection, a power level, a volume, a remaining battery life, an artist, a song title, a time remaining during the playback of an audio file, a duration of an audio file's playback, or any other data related to an audio data file.

[**0319**] In one embodiment, the audio device **304** also includes a power module **328**, which provides power to the audio device **304**. The power module **328** is generally any device adapted to provide power, such as: a battery, a capacitor, a solar cell, solar paint, a fuel cell, and/or any other such device known to those of skill in the art. In one embodiment, the power module **328** distributes power to the various components of the audio device **304** via a conductor **332**, either directly or indirectly. In one embodiment, the power module **328** is a rechargeable battery, such as a lithium-ion polymer battery.

[**0320**] In one embodiment, the power module **328** is recharged via the data port **308**, and/or via an external

charger (not shown). In one embodiment, the power module **328** has an input power rating of 5 Vdc at 150 mA, and a lifetime of 6 hours, although other input power ratings and lifetimes are possible. In one embodiment, the audio device **304** is able to play audio data files for at least about 4, 6, 8, 10, 12 hours, or more before the power module **328** is recharged. In one embodiment, the audio device **304** is able to play audio files for greater than about 6 hours before the power module **328** is recharged. In one embodiment, the power module **328** is able to be recharged in no more than about 3 hours, and reaches at least about 80% recharge in no more than about 1 hour. In one embodiment, the audio device **304** includes a power save function to conserve power consumption from the power module **328**. For example, in one embodiment, when the audio device **304** has not been activated by the user for a period of time, the audio device **304** enters a sleep state, or automatically turns itself off. In one embodiment, the audio device **304** turns itself off after about 5, 10, 20, or 40 minutes of non-use.

[**0321**] The audio device **304** may also include a memory module **330**, which in one embodiment stores audio data files. The memory module **330** may include any of a variety of electronic memory devices, including but not limited to, a hard drive, flash memory, RAM, ROM, EPROM, EEPROM, or PROM. In one embodiment, the memory module **330** includes NAND flash memory. In one embodiment, the memory module **330** includes at least about 128 MB. In other embodiments, the memory module **330** includes, by way of example, at least about 256 MB, 512 MB, or 1 GB of memory.

[**0322**] The memory module **330** may be permanently contained within the audio device **304**, or may be removable. For example, in one embodiment, the memory module **330** includes an SD memory card, a compact flash memory card, a USB drive, a MEMORYSTICK, SMARTSTICK, and/or any other removable memory device as is well known to those of skill in the art.

[**0323**] Conductors **332** generally provide direct or indirect electrical communication between the various components of the audio device **304**. In one embodiment, the conductors **332** include a data bus, power distribution network or a combination thereof. In one embodiment, the conductors **332** include a flexible printed circuit board (PCB), a conductive paint or coating, an Aricon fiber, or a Kevlar fiber. The PCB may be a multi-conductor PCB, and in one embodiment includes multiple conductors. In one embodiment, the PCB includes five conductors. In another embodiment, the conductors **332** include fiber dipped in or otherwise coated with a highly-conductive material, such as, for example, an aramid yarn or Kevlar fiber containing silver, or any other conductor known to those of skill in the art.

[**0324**] The conductors **332** may be embedded within the frame of the audio device **304** or applied to a surface of the audio device **304**. In another embodiment, the audio device **304** includes both embedded and surface-applied conductors **332**. In one embodiment, conductors **332** include conduits, such as conduits **73***ai,* **73***bi,* **274***i,* and **14**Ai', as illustrated above in **FIG. 3M**. The conductors **332** may be embedded within the frame of the audio device **304** by extending through a channel, such as channel **316** illustrated in **FIG. 3M**. In other embodiments, the conductors **332** are applied to a surface of the audio device **304**. In one embodiment, conductors **332** are applied to the surface of the audio device **304** such as the frame and/or lens and include conductive metals or paint. Conductive paints and coatings are well known to those of skill in the art, and include, for example, the ELECTRODAG series of products manufactured by Acheson industries in Port Huron, Mich.

[**0325**] In one embodiment, the conductors **332** include conductive paints of one or more colors. By using conductors **332** having colors, the conductors **332** function as electrical conductors and provide design and aesthetic enhancement of the audio device **304**.

[**0326**] In one embodiment, the audio device **304** includes dual automatic equalization. The audio device **304** may also include static and/or noise correction, and/or active or passive noise cancellation. The audio device **304** has a total harmonic distortion of less than about 1.0% and, in one embodiment, less than about 0.1%. The signal-to-noise ratio is generally greater than about 80 dB, and in one embodiment, at least about 90 dB.

[**0327**] In one embodiment, the audio device **304** receives a wireless signal, such as an FM or satellite radio, or wireless network, infrared, Bluetooth signal, or the like. The audio device **304** identifies audio signal information in the wireless signal, such as the performer of a song corresponding to the wireless signal.

[**0328**] The audio device **304** compares the audio signal information to stored preference information to determine whether to receive and store the wireless signal corresponding to a particular song. For example, in one embodiment, a user provides the audio device **304** with a list of preferred information, which includes preferred song names, artist names, or show or program titles. The audio device **304** monitors wireless signals to determine if preferred information is or will be broadcast. If the audio device **304** determines that preferred information is or will be broadcast, the audio device **304** receives the preferred information and saves it in the memory module **330**. In one embodiment, the audio device **304** receives the preferred information and compresses it according to any of the compression or de-compression schemes described in greater detail above. Once compressed, the preferred information is saved in the memory module **330**.

[**0329**] In another embodiment, a user provides the audio device **304** with a list of preferred information, which includes preferred song names, artist names, or show or program titles. The audio device **304** also receives a program guide, which generally indicates the schedule of transmission of songs, programs, or other content from a content source **302**, such as the content source **302** shown in **FIG. 20**. The audio device **304** determines when preferred information will be available by comparing the preferred information to the program guide. The audio device **304** receives and stores the preferred information based upon the comparison.

[**0330**] In one embodiment, the audio device **304** is generally light-weight, and able to be worn comfortably by a user for an extended period of time. In one embodiment, the audio device **304** weighs less than about 75 g, less than about 50 g, or less than about 30 g. In one embodiment, the audio device **304** weights about 52 g.

[**0331**] One embodiment of a method of audio playback **350** is illustrated in **FIG. 22**. An audio file is received at

block **352**. The audio file may be any of the compressed or non-compressed digital file formats described above with respect to **FIGS. 20 and 21**, or may be any other audio file. The audio file may be any content described above with respect to **FIG. 20**. In one embodiment, the audio file is an MP3 formatted audio file.

[**0332**] The audio file is stored in the audio device **304** at block **354**. At block **356**, the method **350** determines whether the user has instructed the audio device **304** to play back the audio file. If not, the method **350** continues to block **358**, where the method **350** determines whether the user has instructed the audio device **304** to load an audio file into the audio device **304**. If not, the method **350** returns to block **356**. If the user has instructed the audio device **304** to load an audio file, the method **350** returns to block **352**.

[**0333**] If at block **356** the user has instructed the audio device **304** to play back an audio file, the method **350** continues to block **360**. At block **360** the method processes an audio file. In one embodiment, block **360** includes any one or a combination functions that may be performed with respect to an audio file. For example, at block **360** the audio file may be selected, the playback volume may be adjusted, the tone, balance, bass, treble, or other audio parameter may be adjusted, and/or any other processing function may occur.

[**0334**] At block **362** the audio file is played back, which in one embodiment includes decompressing an audio file, converting it to an analog signal, and sending a signal to speakers so that the audio file may be heard by a user. After block **362** the method **350** returns to block **358**.

[**0335**] **FIG. 24** illustrates an audio device **304** in accordance with another embodiment of the present invention. The audio device **304** of **FIG. 24** may be the same as and/or include any or all of the features of any of the audio devices described above with respect to **FIGS. 1-23**. The audio device **304** of **FIG. 24** includes a frame **380**, which includes an ear stem **382**, an electronic housing **384**, a coupling **386**, and orbitals **388**. The embodiment of audio device **304** illustrated in **FIG. 24** is adapted to be worn on the head of a user as a pair of eyeglasses, although other configurations for the support of audio device **304** may be employed.

[**0336**] In one embodiment, the electronic housing **384** is a hollow cavity formed within the audio device **304** frame **380**. Electronic components of the audio device **304**, for example, any one or all of the components described above with respect to **FIG. 21** and elsewhere herein, are at least partially enclosed within electronic housing **384**. In one embodiment, the audio device **304** includes at least three buttons **390**, which extend from the electronic housing **384**, and allow user control over operation of the audio device **304**. The orbitals **388** of the audio device **304** at least partially enclose and/or support a lens **392**. Additional details regarding the lens **392** of the audio device **304** are provided in greater detail below with respect to **FIGS. 26-28**.

[**0337**] In one embodiment, the frame **380** of the audio device **304** includes two ear stems **382**. The right ear stem **382** may include an electronic housing **384**, and the left ear stem **382** may include a housing (not shown) to carry a power source **328** (not shown), for example, an AAAA battery, a rechargeable battery, or any other power source described above. Power from the power source **328** is provided to the electronic components of the audio device **304** within the electronic housing **384** via conductors **332** (not shown). In such configuration, the weight of the audio device **304** may be substantially evenly distributed across the user's head, as described in greater detail above.

[**0338**] In one embodiment, power is provided from one ear stem **382** to the other ear stem **382** across the upper orbital and nose bridge portion **442** (as shown in **FIG. 27**) of the audio device **304** frame **380**. Analog signals that correspond to a selected compressed digital audio file are provided from the electronic housing **384** to the ear stem **382** that carries the electronic housing **384**, and across the nose bridge portion **442** to the other ear stem **382**. From the ear stems **382**, the analog signal is provided to right and left speakers **400** via the right and left couplings **386** and extensions **398**. In another embodiment, the analog signals are conducted at least partially through or upon the orbitals **388** of the audio device **304** frame **380**.

[**0339**] In another embodiment, electronics components are distributed along the frame **380** of the audio device **304**. In one embodiment, digital signals that correspond to a selected compressed digital audio file are provided through, within or upon the frame **380**. For example, in one embodiment, digital signals are provided across the nose bridge portion **442** of the audio device **304** frame **380**. In one embodiment, digital-to-analog converters **314** are included in the right and left speaker **400** housings, such that audible audio is generated by the speakers **400** based upon the digital signals.

[**0340**] In one embodiment, the coupling **386** of the audio device **304** includes a hollow chamber (not illustrated), into which a boom **394** of a support arm **396** extends. The support arm **396** also includes an extension **398** and a speaker **400**. Speaker **400** is attached to the extension **398** at a speaker pivot **402**. Although one speaker pivot **402** is illustrated, each support arm **396** may include more than one speaker pivot **402** to provide additional adjustability of the speaker **400** with respect to a user's ear. In one embodiment, speaker pivot **402** includes a pin, hinge, cam, and/or ball joint. The boom **394** is configured to at least partially slide along and rotate about its longitudinal axis (illustrated as boom axis **404**) within the coupling **386**. In one embodiment, longitudinal translation of boom **394** with respect to coupling **386** along the boom axis **404** results in speaker **400** position adjustment in an anterior or posterior direction ("z-axis" adjustability, as described below) with respect to a user's ear.

[**0341**] In another embodiment, rotation of boom **394** about the boom axis **404** provides adjustment of the angular orientation of speaker **400** with respect to the user's ears. In one embodiment, boom **394** is configured to rotate about its longitudinal axis such that speaker **400** is directed inward, towards a user's ear. In another embodiment, boom **394** is configured to rotate such that speaker **400** is directed outward and upward, away from a user's ear by at least about 35 degrees and in some embodiments at least about 65 degrees from vertical. Such adjustability is particularly useful for allowing a user to use a telephone without requiring removal of audio device **304** from user's head.

[**0342**] Speaker pivot **402** allows speaker **400** to rotate through an arc about the rotational center of the pivot **402**, thereby providing additional superior-inferior as well as

anterior-posterior speaker position adjustability. See **FIG. 24A**. Rotation through an arc of at least about 45 degrees, and often at least about 90 degrees or 120 degrees is contemplated. In one embodiment, speaker pivot **402** additionally permits speaker **400** to rotate laterally with respect to a user's ear, as illustrated in **FIG. 25**, and discussed in greater detail below with respect to **FIGS. 28-30**. Sound emitted from speaker **400** is generally emitted along a sound propagation axis **406**, which is generally transverse a speaker face **408**. Inward and outward rotation of speaker **400** about speaker pivot **402** permits adjustment of the speaker face **408** and the sound propagation axis **406** with respect to a user's ear. In one embodiment, speaker **400** is adjustable over an adjustment range **410** of about 45°. In other embodiments, speaker **400** is adjustable over an adjustment range **410** of no more than about 5°, 10°, 15°, 25°, 30°, or 60°. In one embodiment, speaker is adjustable over an adjustment range of greater than about 25°. Additional discussion regarding speaker **400** adjustability is discussed in greater detail below.

[**0343**] Overall, in one embodiment, the audio device **304** provides speaker **400** adjustability in about four degrees-of-freedom with respect to a user's ear. In other embodiments, the audio device **304** provides speaker **400** adjustability in one, two, three or more than three degrees-of-freedom.

[**0344**] The lens **392** of the audio device **304** may be any of a variety of lenses described above, including but not limited to, sunglass lens, waterwhite lens, UV filtering lens, plano lens, magnifying lens, prescription lens, polarized lens, tinted lens, bifocal lens, trifocal lens, Polaroid lens, photochromic lens, protective lens, or the like. The lens **392** may be manufactured from a variety of materials, as described above, including plastic, polymers, or glass, or a combination thereof. Polycarbonate and CR-39 are suitable non-glass lens materials. In addition, the lens **392** may be fabricated by injection molding, coining, thermoforming, coating, or layering one or more materials together, as is well known to those of skill in the art. The lens **392** may be interchangeable so that a user can select the lens **392** attached to the audio device **304** depending upon the user's preference.

[**0345**] The term lens as used herein may refer either to a single lens in a unitary lens system, or a dual lens in a system having a separate lens for each of the left and right line of sight. The lens generally comprises a lens body, having a front surface, a rear surface, and a thickness therebetween. The front surface of the lens preferably conforms to a portion of the surface of a solid geometric shape, such as a portion of the surface of a first sphere having a first center. The rear surface of the lens preferably conforms substantially to a portion of the surface of a solid geometric shape, which may be the same or different than that conforming to the front surface. Preferably, the rear surface conforms substantially to a portion of the surface of a second sphere, having a second center.

[**0346**] The first and second centers are offset from one another to taper the lens thickness. Preferably, the lens is mounted in the frame such that a line drawn through the first and second centers is maintained substantially parallel with a wearer's reference line of sight. Often, the wearer's reference line of sight will be the wearer's straight ahead normal line of sight.

[**0347**] The lens may be cut from a lens blank, or formed directly into its final configuration such as by injection molding or other techniques known in the art. The lens may be oriented on the head of a wearer by the eyeglass frame such that the straight ahead normal line of sight crosses the posterior surface of the lens at an angle greater than about 95°, and often within the range of from about 100° to about 120°, while maintaining the optical center line of the lens in a substantially parallel relationship with the straight ahead normal line of sight of the wearer. The optical center line of the lens may or may not pass through the lens. Further aspects of the optically correct embodiment of the lens for use in the present invention are disclosed, for example, in U.S. Pat. No. 6,168,271 to Houston et al., entitled Decentered Noncorrective Lens for Eyewear, the disclosure of which is incorporated by reference in its entirety herein.

[**0348**] In one embodiment, as illustrated in **FIGS. 26-28**, lens **392** is mounted to a lens mount **440**, which is adjustable with respect to frame **380**. For example, in one embodiment, lens mount **440** is coupled to a bridge portion **442** of frame **380** via a pivot or hinge (not shown). The pivot allows the lens mount **440** and the lens **392** attached thereto, to rotate up and out of the visual field of the wearer. Such adjustability of the lens **392** allows the user to remove the lens **392** from the user's visual field without requiring removal of the audio device **304** from the user's head. In one embodiment, where the lens **392** includes sunglass lens, flip-up functionality advantageously permits the user to wear the audio device **304** in bright environments with the sunglass lens flipped down, and in dark environments with the sunglass lens flipped up.

[**0349**] A secondary lens may be provided for each of the wearer's right and left lines of sight. The secondary lens may be secured to the frame **380** on the posterior side of the primary lens **392**, such that when the primary lens **392** is advanced from the first position as illustrated in **FIG. 26** to a second position as illustrated in **FIG. 27**, the secondary lens remains within the wearer's line of sight. The secondary lens may be a waterwhite lens, and may either be a prescription lens or a protective plano lens.

[**0350**] Any of a variety of mechanisms may be used to couple lens mount **440** to the frame **380** of the audio device **304**. Such mechanisms include pins, hinges, joints, including ball joints, and any other suitable mechanism, as are well known to those of skill in the art. In one embodiment, lens mount **440** is detachably coupled to frame **380** so that the user may remove and exchange lenses **392** depending upon the user's requirements. For example, lenses **392** of different color, shape, size, prescription, tint darkness, polarization, filtering, or any other optical or aesthetic quality may be interchanged and used with the audio device **304**.

[**0351**] In one embodiment, the frame **380** includes a support ridge **444** formed within an edge of a frame orbital **388**. The support ridge **444** is generally designed to accommodate a contact edge **446** of the lens **392**, and to provide resistance and support for frontal impact against the lens **392**. In one embodiment, the support ridge **444** provides impact resistance at or in excess of that required by a national or international standard, such as ANSI Z87.1-2003.

[**0352**] The lens **392** may be pivotably connected to the frame **380** in any of a variety of ways. In the illustrated

embodiment, a medial side **393** of lens **392** is connected to a lens mount **440**, which is pivotably connected to the frame **380**. Due to the bilateral symmetry of the disclosed embodiment, only a single lens **392** will be described herein.

[**0353**] The medial side **393** of the lens **392** is provided with structure for enabling a connection **395** to the lens mount **440**. In the illustrated embodiment, lens **392** is provided with at least a first alignment recess **397**, which may be molded or formed in the medial side **393** of the lens **392**. The first alignment recess **397** is positioned to receive a first alignment pin **399** which projects from the lens mount **440**. Optionally, a second alignment recess **401** may be positioned to receive a second alignment pin **403**, as illustrated in **FIG. 27**.

[**0354**] A fastener **405**, such as a screw is advanced through an aperture in the lens **392** and into a threaded recess within lens mount **440**. The fastener **405**, in cooperation with the alignment recess and alignment pin configuration described above, enable a secure attachment of the lens **392** to the lens mount **440**, with minimal encroachment upon the field of view.

[**0355**] The fastener **405** may be provided with a knob, hexagonal recess, or other rotational engagement structure, to permit rotation of the fastener **405** by hand or with a tool, to enable exchange of the lens **392**. Alternatively, fastener **405** may comprise any of a variety of snap fit structures, to permit removal of the lens **392** and replacement with an alternative lens **392**.

[**0356**] The mechanical center of each lens is displaced from the axis of rotation of the lens mount **440** by sufficient distance to enable the lens **392** to be rotated in and out of engagement with the support ridge **444**, even with rake and wrap angles in excess of about 6° or 8° or 10°. In the illustrated embodiment, the axis of rotation of the lens mount **440** is displaced from the mechanical center of the lens by at least about 0.25", and, in some embodiments, at least about 0.5". In the illustrated embodiment, the axis of rotation of the lens mount **440** extends within about 0.125" of the upper edge of the lens **392** when the lens is in the first, lowered position, when viewed in a front elevational view.

[**0357**] The support ridge **444** may be provided with at least one recess **407**, for receiving the fastener **405**, to maximize the contact surface area between the lens **392** and the support ridge **444**. The lens mount **440** may be provided with a spring bias, such as a first surface spring biased against a second, cam surface to bias the lens **392** against the support ridge **440** when the lens is in the first position, and to bias the lens **392** away from the wearer's line of sight when the lens **392** is in the second position.

[**0358**] An embodiment of the audio device **304** is generally adapted to be worn at least partially upon the head **460** of a user. A top view of a user's head is generally illustrated in **FIG. 29**. The head **460** includes two ears **462**. The external, visible portion of the ear **462** is generally referred to as the pinna **464** or auricle. A small, cartilaginous protrusion within the pinna **464** is known as the tragus **466**. The size and shape of the tragus **466** varies between individuals, but it generally extends posteriorly and sometimes slightly laterally with respect to the head **460**. A tragus-tragus line **466** extends laterally across the head **460**, between the posterior limit of each of the left and right tragus, and generally bisects the head **460**, as viewed from above. A lateral plane of symmetry **470** extends transverse the tragus-tragus line **466**, substantially bisecting both the user's head **460** and nose **472**.

[**0359**] **FIG. 30** illustrates a top, horizontal cross-sectional view of the external portion of a user's left ear **462** where the speaker **400** (not shown) of an audio device **304** (not shown) is not positioned against, or partially within the ear **462**. The ear **462** includes a pinna **464** and tragus **466** as described above. The ear **462** also includes a concha **480**, outer ear canal **486**, and external auditory meatus **484** or opening of the outer ear canal **482**. The posterior aspect of the auditory meatus **486** partially separates the concha **480** and outer ear canal **482**. **FIG. 29** also illustrates anterior **488** and posterior **490** directions with respect to the user's head **460**. Tragus line **468** lies on a tangent to the posterior limit of the tragus **466**.

[**0360**] A speaker **400** placed partially within the ear **462** of a user is illustrated in **FIG. 31**. The face **408** of a speaker **400** lies generally in a speaker plane **494**, which intersects the tragus-tragus line **468** at an orientation angle **496** such that sound emitted from the speaker **400** along the sound propagation axis **406** is directed towards an anterior wall **498** of the outer ear canal **482**. By adjusting the orientation angle **496** of the speaker face **408** with respect to the tragus-tragus line **468**, sound quality and enjoyment may be enhanced.

[**0361**] In one embodiment, when the speaker **400** is placed within a user's ear **462**, the speaker **400** may contact the ear **462** at the tragus **466** and posterior aspect of auditory meatus **486**, as illustrated in **FIG. 30**. The orientation angle **496** formed by such speaker **400** placement may be any of a variety of angles, preferably directing the sound propagation axis in an anteriorly inclined direction. In one embodiment, the orientation angle **496** is in the range of between about 15° and 85°, between about 20° and 50°, or between about 20° and 30°. In one embodiment, the orientation angle is about 25°.

[**0362**] An audio device **304** and a reference system **500** are shown in **FIGS. 32-35**. Referring first to **FIG. 32**, audio device **304** generally includes two speakers **400**, each having a speaker face **408**, as described in greater detail above. The speaker face **408** has a centerpoint **409**, which in one embodiment is the mechanical center of the planar surface substantially parallel to the speaker face **408** and bounded by a speaker perimeter **411**.

[**0363**] In one embodiment, reference system **500** includes three axes **502**, **504**, **506** that may be used to describe the position, orientation, and degrees of freedom of movement and rotation of the speakers **400**, the speaker faces **408**, and speaker face centers **409** with respect to the audio device **304**. The reference system **500** includes an x-axis **502**, a y-axis **504**, and a z-axis **506**. In one embodiment, the x-axis **502** is parallel to a reference axis x', as shown in **FIG. 33**, which is tangential to the ends **508** of the ear stems **382** which, in a typical, symmetrical eyeglass, have approximately the same length. In the illustrated embodiment, the x-axis **502** lies on a plane that bisects the anterior-posterior dimensions of the audio device **304**. The x-axis **502** generally extends laterally, or from side-to-side with respect to a wearer's head when the audio device **304** is worn.

[**0364**] A z-axis **506** bisects the eyeglass along its typical plane of symmetry and is perpendicular to the x-axis as

illustrated in **FIG. 33**. The z-axis **506** generally extends in a posterior-to-anterior direction with respect to a wearer's head when the audio device **304** is worn.

[**0365**] A y-axis **504** is perpendicular to the x-axis **502**, as illustrated in **FIG. 34**. The y-axis **504** lies on a plane that bisects the audio device **304**. The y-axis **504** generally extends in an inferior-to-superior direction with respect to a wearer's head when the audio device **304** is worn. In one embodiment, the x-axis **502**, y-axis **504**, and z-axis **506** are substantially perpendicular to one another.

[**0366**] The axes **502**, **504**, **506** of the reference system **500** define multiple planes, which may also be used to describe the position, orientation, and degrees of freedom of movement and rotation of the speakers **400**, the speaker faces **408**, and speaker face centers **409** with respect to the audio device **304**. For example, in one embodiment, the x-axis **502** and z-axis **506** define an xz-plane, the x-axis **502** and y-axis **504** define an xy-plane, and the y-axis **504** and z-axis **506** define a yz-plane, as illustrated in **FIGS. 33-35** respectively. The term "substantially parallel" as used herein is intended to include deviations from parallel that are induced by reasonable manufacturing tolerances and normal anatomical variations as the context may require. In addition, a term such as "the yz-plane" is intended to include the yz-plane and all planes parallel to the yz-plane unless indicated otherwise either expressly or by context. Motion along, for example, the x-axis refers also to motion along any parallel to the x-axis.

[**0367**] Referring back to **FIG. 32**, in the illustrated configuration, the speaker faces **408** of the speakers **400** lie on a plane that is substantially parallel to the yz-plane. The speaker **400**, speaker face **408**, and centerpoint **409** may be moved linearly anteriorly or posteriorly in the z-axis **506** by employing any of a variety of devices, speaker mounts, joints and couplings, as described in greater detail above. For example, by coupling speaker **400** to a boom **394** that slides within a coupling **386**, speaker **400** may be linearly translated in a direction substantially parallel to the z-axis **506**, as illustrated in **FIG. 3F** and elsewhere herein.

[**0368**] In one embodiment, the linear z-axis translation distance will vary depending upon the particular design of the boom **394** and coupling **386**. Preferably, a z-axis range of at least about 0.25 inches will normally be used. For example, by using a longer boom **394** and coupling **386**, z-direction linear translation may be increased. In addition, by using a telescoping boom **394**, z-direction linear translation may also be increased. In one embodiment, a telescoping boom **394** includes at least two substantially concentric structures (e.g., tubes), that slide with respect to one another, and allow the boom **394** to be manipulated from a first, compacted configuration to a second, extended configuration. Other nested or slider and track structures may be utilized, as will be appreciated by those of skill in the art. For example, any of a variety of axially elongate rails may be aligned in the z-axis, to serve as the coupling **386**. The extension **398** may be provided with any of a variety of complementary clamps or retainers for traveling axially along the rail, thereby providing z-axis adjustability of the speaker.

[**0369**] In one embodiment, a locking or dampening mechanism (not shown) is used to secure the boom **394**, and to fix the position of the speaker **400** from or provide resistance to further movement in the z-axis **506**. For example, in one embodiment, a compression ring or collar is used to apply friction between the boom **394** and the coupling **386**, or between nested, concentric structures of a telescoping boom **394**. This enables a wearer to adjust the z-axis position of the speaker by overcoming the friction, but the friction will retain the position selected by the wearer. Locking structures, including pins, levers, clasps, switches, knobs, and latches may also be utilized.

[**0370**] During movement of the speaker **400** in the z-axis **506** by axial movement of the boom **394** speaker face **408** may either also be adjusted or may remain substantially parallel to the yz-plane. Speaker **400** may be moved in certain embodiments in a direction substantially parallel to the z-axis **506** while speaker face **408** remains positioned at a preset angle with respect to the yz-plane. For example, referring to **FIGS. 25 and 32-35**, speaker **400** may be inclined at an angle with respect to the yz-plane that is within an adjustment range **410**. While, before, or after the speaker **400** is positioned at the selected angle, the speaker's **400** position along an axis substantially parallel to the z-axis **506** may be adjusted, as described above.

[**0371**] Similarly, in another embodiment, the speaker **400** may be moved in a direction substantially parallel to either or both of the x-axis **502** or y-axis **504**. For example, in one embodiment, the speaker face **408** remains substantially fixed with respect to the yz-plane while the speaker face **408** is laterally or medially displaced along an axis substantially parallel to the x-axis **502**. Such movement may be achieved by utilizing any of a variety of x-axis telescoping or track and slider mechanisms well known to those of skill in the art. For example, in one embodiment, the speaker **400** is coupled to the audio device **304** with a slider. The slider moves within a guide extending along the x-axis and provides lateral movement of the speakers **400** along the x-axis. Alternatively, a pivotable joint can be provided at each end of the extension **398**.

[**0372**] In another embodiment, the speaker **400** includes a threaded portion that mates with a threaded counterpart on the speaker support. Lateral displacement along a direction substantially parallel to the x-axis **502** is achieved by rotating the speaker **400** with respect to its threaded counterpart. In one embodiment, the speaker's threaded portion includes male threads, and the threaded counterpart includes female threads. In another embodiment, the speaker's threaded portion includes female threads, and the threaded counterpart includes male threads. In addition, in other embodiments, the speaker **400** moves laterally at an angle offset from the x-axis **502**.

[**0373**] Speaker **400** movement in any direction may be de-coupled from movement in other directions. For example, linear translation of the speaker **400** along the z-axis **506** (or an axis substantially parallel thereto) does not necessarily result in translation or movement of the speaker **400** along either the x-axis **502** or y-axis **504**. However, in other embodiments, speaker **400** movement in one direction may be coupled to movement in one or more other directions as well. Such coupled movements are described in greater detail below.

[**0374**] In one embodiment, the speakers **400** of the audio device **304** may be rotated within one or more planes. The term "rotation" is intended to include both rotation of an

object about an axis extending through the object, as well as movement of an object through an arcuate path about a center of rotation separated by an offset distance from the object.

[0375] Referring again to **FIG. 32**, speaker **400** is coupled to extension **398** with a speaker pivot **402**. In one embodiment, speaker **400** rotates about speaker pivot **402**, and an axis that extends through the speaker pivot **402**, and which is substantially parallel to the x-axis **502**. During such rotation, in one embodiment, the speaker face **408** remains substantially parallel to a yz-plane (or a reference plane that is located at an offset angle with respect to the yz-plane), while the speaker **400** centerpoint **409** moves in an arcuate path within the yz-plane (or within a reference plane that is located at an offset angle with respect to the yz-plane). Although the speaker pivot **402** is illustrated as located at the connection between the speaker and the extension **398**, it could alternatively be located at the connection between the extension **398** and the boom or other attachment point to the eyeglasses, or along the length of the extension **398**. At least two pivots may also be provided, such as one at each end of the extension **398**, depending upon the desired performance.

[0376] Rotation of speaker **400** about the speaker pivot **402** provides arcuate movement of the speaker **400** in the yz-plane. Such movement allows superior-inferior (e.g., y-axis) adjustment of speaker **400** position with respect to a user's ear without adjusting the rest of the frame **380** of the audio device **304**. Y-axis adjustability of the speaker center **409** of at least about 0.25 inches, often at least about 0.45 inches and in some embodiments at least about 0.75 inches is contemplated. By adjusting the speaker **400** position, the speaker's sound propagation axis may be oriented with respect to a user's ear without adjusting the frame **380** of the audio device **304**.

[0377] Any of a variety of structures may be used as the speaker pivot **402**, as described in greater detail above. For example, the speaker pivot **402** may include a ball and socket joint, concentric tubes, a pin and channel, a joint, a hinge, a lever, or any other structure that provides rotation coupling, as is known to those of skill in the art.

[0378] In another embodiment, speaker **400** may be rotated laterally about a boom axis **404** (as illustrated in **FIGS. 3H and 24**) to provided further rotational adjustability of the speaker **400** in the x-axis. In one embodiment, rotation of speaker **400** about a boom axis **404** results in arcuate movement of the speaker **400** from a first, listening position, in which the speaker face **408** is substantially parallel to the yz-plane (or to a reference plane that is offset from the yz-plane by a first offset angle), to a second position in which the speaker face **408** may be substantially parallel to the xz-plane (or to a reference plane that is offset from the xz-plane by a second offset angle). The offset between the speaker and the center of rotation (boom axis **404**) defines the radius of arcuate movement of the speaker within the xy-plane. An x-axis offset (when the speaker is in the second position) of at least about 0.25 inches, often at least about 0.5 inches, and in some embodiments at least about 1.0 inches, is contemplated.

[0379] In such embodiment, the speaker **400** and its centerpoint **409** move within a plane that is substantially parallel to the xy-plane from the first position along an arcuate path in a lateral, superior direction to the second position. The speaker **400** may be moved back to the first position by traveling along the arcuate path in a medial, inferior direction from the second position. A speaker **400** shown in one embodiment of a first position is illustrated in **FIGS. 32-35**. In another embodiment, the speaker **400** is configured to rotate from a first position in which the speaker face **408** is substantially parallel to the yz-plane to a second position in which the speaker **400** is inclined at an angle with respect to the yz-plane.

[0380] In one embodiment, this movement of the speaker **400** and its centerpoint **409** within the xy-plane allows the wearer to raise the speaker **400** from adjacent the wearer's ear without moving or adjusting the remaining portion of the frame **380** of the audio device **304**. Such movement allows the wearer to receive a telephone call if the eyeglass is not equipped with an internal cellular phone and place the speaker of a hand held telephone adjacent the wearer's ear without requiring the removal of the audio device **304** from the wearer's head.

[0381] In another embodiment, speaker **400** may be rotated about a reference axis that extends in a direction substantially parallel to the y-axis **504**. One example of such adjustability is illustrated in **FIG. 25**, and is discussed in greater detail above. In one embodiment, such adjustability allows the movement of the speaker **400** from a first position in which the speaker face **408** is substantially perpendicular to tragus-tragus line **468**, the ear canal axis **492** and/or an axis substantially parallel to the x-axis **502**, to a second position in which the speaker face **408** is offset from the tragus-tragus line **468**, the ear canal axis **492** and/or an axis substantially parallel to the x-axis **502** by an offset angle **496**. One example of such offset angle is described in greater detail above with respect to **FIG. 31**.

[0382] Any of a variety of structures may be used to provide rotational movement as described above. For example, the speaker **400** may be coupled to the frame **380** of the audio device **304** with a ball and socket joint, concentric tubes, a pin and channel, a joint, a hinge, a lever, or any other structure that provides rotation coupling, as is known to those of skill in the art.

[0383] Thus, the speakers **400** of the audio device **304** may be moved linearly within along directions substantially parallel to one or more of the x-axis **502**, y-axis **504**, z-axis **506**, and/or any direction offset from any one or more of the x-axis **502**, y-axis **504**, or z-axis **506** by a fixed or adjustable offset angle. In addition, in certain embodiments, the speaker **400** of the audio device **304** may be moved typically through an arc residing within the xy-plane, the yz-plane, the xz-plane, and/or any preselected plane offset from any one or more of the xy-plane, the yz-plane, or the xz-plane by a fixed or adjustable offset angle.

[0384] In addition, in one embodiment, such multi-dimensional adjustability may be performed by moving the speaker **400** with respect to the audio device **304** without requiring sliding or rotational adjustment of the frame **380**. For example, in one embodiment, the speaker **400** is coupled to the audio device **304** frame **380** with a support which comprises flexible tube, or conduit, such as a gooseneck tube, wire bundle, or hollow wire. Such flexible tubing allows independent, three-dimensional positioning of a speaker **400** along any axis, and within any plane, without requiring adjustment of the position of the frame **380**. The support retains the position of the speaker selected by the wearer until adjusted again to a different position.

[0385] Of course, the foregoing description is that of a preferred construction having certain features, aspects and advantages in accordance with the present invention. Accordingly, various changes and modifications may be made to the above-described arrangements without departing from the spirit and scope of the invention, as defined by the appended claims.

What is claimed is:

1. A wearable electronically enabled interface system for providing audio and or video input to the wearer from at least two sources, comprising:

A wearable support, for carrying at least a portion of the interface;

At least one data port carried by the support, for receiving data from at least a first and a second source;

A selector, enabling the wearer to direct data from a desired one of the first and second sources to the interface.

2. A wearable electronically enabled interface system as in claim 1, wherein the wearable support comprises an eyeglass frame.

3. A wearable electronically enabled interface system as in claim 1, wherein the data port comprises a radio frequency receiver.

4. A wearable electronically enabled interface system as in claim 1, wherein the interface comprises at least one speaker.

5. A wearable electronically enabled interface system as in claim 1, wherein the interface comprises two speakers.

6. A wearable electronically enabled interface system as in claim 1, wherein the interface comprises at least one microphone.

7. A wearable electronically enabled interface system as in claim 1, wherein the interface comprises a video display.

8. A wearable electronically enabled interface system as in claim 1, wherein the selector comprises a wearer actuatable control.

9. A wearable electronically enabled interface system as in claim 1, further comprising a second data port.

10. A wearable cell phone and music system, comprising:

A wearable support;

A cell phone in communication with the support;

A music source in communication with the support;

An electronic interface carried by the support; and

A selector for regulating the transmission of data from at least one of the cell phone and the music source to the interface.

11. A wearable cell phone and music system as in claim 10, further comprising radio frequency electronics for wireless communication between the cell phone and the support.

12. A wearable cell phone and music system as in claim 11, further comprising radio frequency electronics for wireless communication between the music source and the support.

13. A wearable cell phone and music system as in claim 11, wherein the music source is carried by the support.

14. A wearable cell phone and music system as in claim 13, wherein the music source comprises an MP3 player.

15. A wearable cell phone and music system as in claim 1, wherein the music source comprises an MP3 player.

16. A method of managing multiple signal sources configured to provide signals to a single wearable interface, comprising the steps of:

Enabling data from a first source to reach a wearer through the interface;

Providing the wearer with a signal indicative of data available from the second source;

Enabling data from the second source to reach the wearer through the interface in response to activation of a control by the wearer.

17. A method of managing multiple signal sources as in claim 16, wherein the first source comprises a source of music.

18. A method of managing multiple signal sources as in claim 17, wherein the second source comprises a telephone.

19. A method of managing multiple signal sources as in claim 16, wherein data from the first source is no longer provided to the interface in response to activation of the control.

20. A method of managing multiple signal sources as in claim 19, wherein transmission of data from the first source to the interface is resumed in response to interruption of transmission of data from the second source to the interface.

* * * * *