(19) Europäisches Patentamt
European Patent Office
Office européen des brevets

(11) EP 1 519 625 A2

(12) **EUROPEAN PATENT APPLICATION**

(43) Date of publication:
30.03.2005 Bulletin 2005/13

(51) Int Cl.[7]: **H04R 25/00**

(21) Application number: **04255520.1**

(22) Date of filing: **13.09.2004**

(84) Designated Contracting States:
AT BE BG CH CY CZ DE DK EE ES FI FR GB GR HU IE IT LI LU MC NL PL PT RO SE SI SK TR
Designated Extension States:
AL HR LT LV MK

(30) Priority: **11.09.2003 US 660454**

(71) Applicant: **Starkey Laboratories, Inc.**
Eden Prairie, MN 55344 (US)

(72) Inventors:
- **Victorian, Thomas A.**
Minnesota 55447 (US)
- **Preves, David A.**
Minnesota 55317 (US)
- **Bradley, J. Virgil**
Minnesota 55442 (US)

(74) Representative: **Jackson, Robert Patrick**
Frank B. Dehn & Co.,
European Patent Attorneys,
179 Queen Victoria Street
London EC4V 4EL (GB)

(54) **External ear canal voice detection**

(57) Ear-level full duplex audio communication systems each include one or two ear attachment devices, such as in-the-ear (ITE) or behind-the-ear (BTE) devices, that wirelessly communicates to a remote device such as a computer, a personal digital assistant (PDA), a cellular phone, a walkie talkie, or a language translator. When used as a hearing aid, such a system allows a hearing impaired individual to communicate with or through the remote device, such as to talk to another person through a cellular phone. When being used as an ear piece wirelessly extended from the remote device, such system allows an individual with normal hearing to privately communicate with or through the remote device without the need of holding the device or wearing any device wired to the remote device. Each ear attachment device includes a voice operated exchange (VOX), housed within the device, to preserve energy and hence, maximize the period between battery replacement or recharges. The VOX also gates various sounds detected by the system to control possible echoes and ringing.

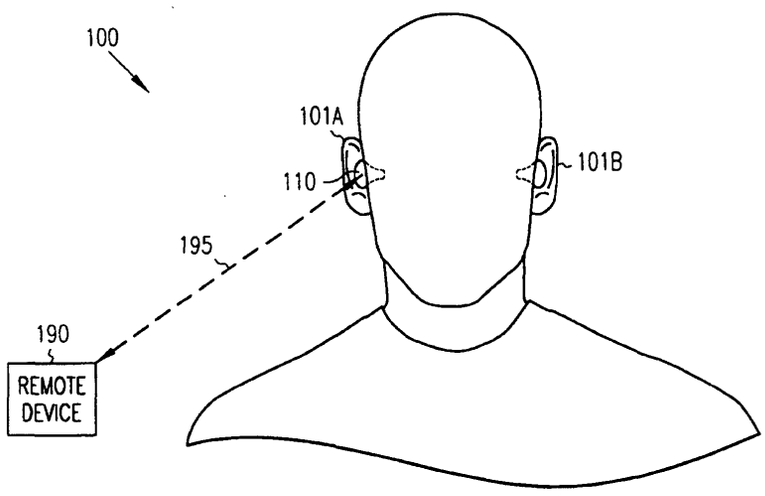

FIG. 1

EP 1 519 625 A2

Harman Ex. 1005
Harman v. ST CasesTech
IPR2024-01302
Page 00001

Description

[0001] This document generally relates to ear-level communication systems and particularly, but not by way of limitation, to such systems communicating with remote devices via full duplex audio.

[0002] Ear-level communication systems are used for hearing impaired individuals to use a communication device such as a cellular phone or other devices transmitting audio signals. They also allow private, hand-free use of such a communication device by individuals with normal hearing.

[0003] An ear-level communication system generally includes tethered or wireless headsets with a microphone boom or a microphone within a cord of the headset to detect voice of the person wearing the headsets. An alternative way to detect voice is via bone connection. Examples include a "clam" shell device that couples to the helix and a custom carmold with a vibration detector on the outer shell. Voice is picked up by detecting bone vibration caused by, and representative of, the voice of the person wearing the device.

[0004] Bi-directional communication has been achieved by a simplex system including a device in the ear canal that both transmits sound to and picks up sound within the ear canal. The device is tethered to a push-to-talk (PIT) system such as a walkie talkie. It is not full duplex and therefore requires interaction by the user in order to switch from listen mode to talk mode.

[0005] Voice operated exchange (VOX) is used to conserve energy when voice is not being detected or transmitted. For example, a headset system includes two ear pieces - for full duplex communication with one earpiece for transmitting and the other for receiving voice - and uses ear canal voice detection to trigger a VOX circuit in a control unit wired to the headset. The system requires a headset with two headphones and wires connecting the headphone to a control unit such as a device clipped on belt. In another example, a full duplex system includes a single headphone to transmit and receive voice, again with a VOX circuit in a control unit wired to the headphone.

[0006] Such ear-level communication systems are likely to be worn by a person for long periods of time. Users with hearing loss may use such a system on a regular basis, both as a conventional hearing aid allowing communication directly with a person and as a hearing aid allowing communicating through another device. Users with normal hearing may wear such a system to be communicatively connected to another person or facility without the need to hold a device at any time. For appearance or secrecy reasons, minimal visibility is generally desirable. Wired connection between a headset or earpiece and a controller makes the system easily visible and is cumbersome to users who need to communicate white being physically active.

[0007] Thus, there is a need for an ear-level communication system that is not easily visible. A need related to miniaturization is the longevity of the system between battery replacements or recharges.

[0008] Ear-level full duplex audio communication systems each include one or two ear attachment devices, such as in-the-ear (ITE) or behind-the-ear (BTE) devices, that wirelessly communicates to a remote device. Such a system allows a hearing impaired individual to communicate with or through the remote device, such as to talk to another person through a cellular phone. Such a system also functions as an ear piece wirelessly extended from the remote device that allows an individual to privately communicate with or through the remote device without the need of holding the device.

[0009] In one embodiment of the invention, a system includes an earmold configured for use as an ITE device. The earmold houses a microphone for use in an ear canal, a processor, and a wireless transmitter. The microphone receives an occluded sound from about the ear canal. The processor processes the occluded sound. The wireless transmitter receives the processed occluded sound from the processor and transmits a wireless signal representing the occluded sound.

[0010] In one embodiment, a system includes an ITE module and a BTE module attached to the ITE module. The ITE module includes a microphone for use in an ear canal. The microphone receives an occluded sound from about the ear canal. The BTE module includes a processor and a wireless transmitter. The processor processes the occluded sound. The wireless transmitter receives the processed occluded sound from the processor and transmits a wireless signal representing the occluded sound.

[0011] In one embodiment, a system includes a first ear-level device and a second ear-level device for use in two opposite ears. The first ear-level device includes a microphone, a first processor, and a wireless transmitter. The microphone is for use in one ear canal to receive an occluded sound from about that ear canal. The first processor converts the occluded sound to an electrical signal. The wireless transmitter receives the electrical signal and transmits an outgoing wireless signal representing the occluded sound. The second ear-level device includes a wireless receiver, a second processor, and a speaker. The wireless receiver receives an incoming wireless signal representing a remote sound. The second processor converts the incoming wireless signal to the remote sound. The speaker is for use in the opposite ear canal to transmit the remote sound to that ear canal.

[0012] In one embodiment, an occluded sound is detected using a microphone placed in an ear canal. An incoming radio signal representing a remote sound from a remote device is also detected. A voice operated exchange (VOX) housed within an ear-level communication device is started when at least one of the occluded sound and the incoming radio signal is detected if the VOX is not already on. The ear-level communication device includes one of an ITE device and a BTE device.

IPR2024-01302 Page 00002

When the occluded sound is detected while the incoming radio signal is not detected, the occluded sound is gated on, and remote sound is gated off. When the incoming radio signal is detected while the occluded sound is not detected, the remote sound is gated on, and the occluded sound is gated off.

[0013] Preferred embodiments of the present invention will now be described by way of example only and with reference to the accompanying drawings, in which:

PIG. 1 is an illustration of an embodiment of an ear-level communication system and portions of an environment in which it is used. This ear-level communication system uses a single ear-level device.

FIG. 2 is an illustration of an embodiment of another ear-level communication system and portions of an environment in which it is used. This ear-level communication system uses a pair of ear-level devices.

FIG. 3A is an illustration of one exemplary exterior configuration of an in-the-ear (ITE) device used as the single ear-level device of FIG. 1 or one of the pair of ear-level devices of FIG, 2.

FIG. 3B is an illustration of one exemplary exterior configuration of an in-the-canal (TTC) device used as the single ear-level device of FIG. 1 or one of the pair of ear-level devices of FIG. 2.

FIG. 3C is an illustration of one exemplary exterior configuration of a completely-in-the-canal (CIC) device used as the single ear-level device of FIG. 1 or one of the pair of ear-level devices of FIG. 2.

FIG. 4A is a block diagram showing one embodiment of the circuit of ear-level device shown in FIGS. 3A, 3B, or 3C used as the single ear-level device of FIG. 1.

FIG. 4B is a block diagram showing one embodiment of portions of a voice operated exchange (VOX) circuit included in the single car-level device of FIG. 1.

FIG. 5 is a block diagram showing another embodiment of the circuit of ear-level device shown in FIGS. 3A, 3B, or 3C used as the pair of ear-level devices of FIG. 1B.

FIG. 6 is an illustration of one exemplary exterior configuration of an ear-level device including a behind-the-ear (BTE) device used as the single ear-level device of FIG. 1 or one of the pair of ear-level devices of FIG. 2.

FIG. 7 is a block diagram showing one embodiment of the circuit of the ear-level device shown in FIG. 6 used as the single ear-level device of FIG. 1.

FIG. 8 is a block diagram showing another embodiment of the circuit of ear-level device shown in FIG. 6 used as the pair of ear-level devices of FIG. 2.

FIG. 9 is a flow chart illustrating an embodiment of a method for audio communication between the single ear-level device or the pair of ear-level devices and a remote device.

FIG. 10 is a flow chart illustrating another embodiment of the method for audio communication between the single ear-level device and a remote device.

[0014] The following embodiments are described in sufficient detail to enable those skilled in the art to practice the invention, and it is to be understood that the embodiments may be combined, or that other embodiments may be utilized and that structural, logical and electrical changes may be made without departing from the scope of the present invention, as defined by the appended claims.

[0015] It should be noted that references to "an", "one", or "various" embodiments in this disclosure are not necessarily to the same embodiment, and such references contemplate more than one embodiment.

[0016] This document discusses, among other things, ear-level full duplex audio communication systems for communicating with remote devices. These systems each include one or two ear-level devices each worn in or about an ear, such as in-the-ear (ITE) or behind-the-ear (BTE) devices, wirelessly coupled to a remote device such as a computer, a personal digital assistant (PDA), a cellular phone, a walkie talkie, or a language translator. When used as a hearing aid, such a system allows a hearing impaired individual to communicate with or through the remote device, such as to talk to another person through a cellular phone. When being used as an ear piece wirelessly extended from the remote device, such system allows an individual with normal hearing to privately communicate with or through the remote device without the need of holding the device or wearing any device wired to the remote device.

[0017] In this document, "voice" includes to the sound of speech made by a person, and sound generally includes an audible signal that includes voice and other signals that can be heard and/or detected by an audio detector. Unless particularly indicated, for example, when voice is distinguished from sound by speech recognition, "voice" and "sound" are used interchangeably throughout thus document because they are not practically separated. For example, detection of a sound refers to the same action as detection of a voice because, while the purpose is to detect the voice, other sounds are picked up as well.

[0018] FIG. 1 is an illustration of an embodiment of an ear-level communication system 100 and portions of an environment in which it is used. System 100 includes an ear-level device 110 attached to an ear 101A. Bar-level device 110 communicates with a remote device 190 through a wireless telemetry link 195. The other ear 101B is free of device attachment. Ear-level device 110 is a self-contained device including its own power source such as a replaceable or rechargeable battery. To maximize battery life or period between recharges, at least a portion of the circuit of ear-level device 110 is voice activated. That is, ear-level device 110 is activated only when it detects a need to transmit or receive a

IPR2024-01302 Page 00003

sound.

[0019] Ear-level device 110 is a full duplex audio device that allows two-way simultaneous conversation between ear 101A and remote device 190. In one embodiment, when being worn by a person having ear 101A, ear-level device 110 picks up sound from the ear canal of ear 101A and delivers sound to the same ear canal. It detects the occluded sound from the ear canal when the person speaks and transmits to the same ear canal a sound received from remote device 190 and/or a sound picked up from the environment surrounding the person. In one embodiment, as illustrated in FIG. 1, ear-level device 110 is configured for right ear attachment. In an alternative embodiment, ear-level device 110 is configured for left ear attachment.

[0020] FIG. 2 is an illustration of an embodiment of an ear-level communication system 200 and portions of an environment in which it is used. System 200 includes a pair of ear-level devices 210A, attached to an ear 101 A, and 210B, attached to ear 101B. Ear-level devices 210A and 210B communicate with a remote device 290 through a wireless telemetry link 295. Ear-level devices 210A and 210B are each a self-contained device including its own power source such as a replaceable or rechargeable battery. To maximize battery life or period between recharges, at least a portion of the circuit of each of ear-level devices 210A and 210B is voice activated. That is, ear-level devices 210A and 210B are each activated only when a need to transmit or receive a sound is detected by the device itself.

[0021] In one embodiment, ear-level device 210A is an audio transmitter that picks up sound from the ear canal of ear 101A, and ear-level device 210B is an audio receiver that delivers sound to the same ear canal. Ear-level device 210A is activated when it detects a sound from the ear canal. Ear-level device 210B is activated when it detects a signal from remote device 290. When both are being worn by a person, ear-level devices 210A and 210B supports full duplex audio allowing two-way simultaneous conversation between the person and remote device 290. In one embodiment, as illustrated in FIG. 2, ear-level device 210A is configured for right ear attachment, and ear-level device 210B is configured for left ear attachment. In an alternative embodiment, ear-level device 210A is configured for left ear attachment, and ear-level device 210B is configured for right ear attachment.

[0022] FIGS. 3A, 3B, and 3C are illustrations of exemplary exterior configuration of ear-level device 110 or one of ear-level devices 210A and 210B. For the purpose of this document, only a device attached to a right ear is shown for each exemplary exterior configuration. It is to be understood that each of ear-level devices 110, 210A, and 210B can be either a device configured for right ear attachment or a device configured for left ear attachment. Generally, a device configured for right car attachment has an exterior configuration that is substantially symmetrical to that of a device of the same type configured for left ear attachment. In system 100, a single ear-level device 110 is a device configured either for right ear attachment or for left ear attachment. In system 200, either one of car-level device 210A and 210B is a device configured for right ear attachment, while the other is a device configured for left ear attachment.

[0023] An occluded sound 305, an ambient sound 306, and a remote sound 307 are illustrated in each of FIGS. 3A, 3B, and 3C. Remote sound 307 is represented by a wireless radio signal transmitted to ear-level device 110. In this document, "occluded sound" includes occluded sound 305, "ambient sound" includes ambient sound 306, and "remote sound" includes remote sound 307.

[0024] FIG. 3A is an illustration of an exemplary exterior configuration of an in-the-ear (ITE) device 310A used as ear-level device 110 or one of ear-level devices 210A and 210B. As shown in FIG. 3A, ITE device 310A is attached to an ear 101 with a pinna 302 and an ear canal 303. ITE device 310A includes a portion inserted into ear canal 303 and another portion fit into the cavity formed by pinna 302.

[0025] FIG. 3B is an illustration of an exemplary exterior configuration of an in-the-canal (ITC) device 310B used as ear-level device 110 or one of ear-level devices 210A and 210B. As shown in FIG. 3B, ITC device 310B is attached to ear 101 with pinna 302 and ear canal 303. ITC device 310B is a form of ITE device that also includes a portion inserted in ear canal 303 and another portion fit into the cavity formed by pinna 302, but the latter portion is smaller than that of ITE device 310A. Its overall size is therefore generally smaller than that of ITE deviee 310A.

[0026] FIG. 3C is an illustration of an exemplary exterior configuration of a completely-in-the-canal (CIC) device 310C used as ear-level device 110 or one of ear-level devices 210A and 210B. As shown in FIG. 3C, CIC device 310C is attached to ear 101 with pinna 302 and ear canal 303. CIC device 310C is a form of ITC device but includes only a portion that is completed inserted into ear canal 303. Its overall size is therefore generally smaller than that of ITC device 310B.

[0027] In one embodiment, each of ITE device 310A, ITC device 310B, and CIC device 310C includes a custom earmold. In another embodiment, each of ITE device 310A, ITC device 310B, and CIC device 310C includes a modular earmold. In one embodiment, the earmold is fully occluded to maximize audio efficiency. In another embodiment, the earmold is vented to remove undesirable low frequency sound.

[0028] The choice of a device type, such as from the types shown in FIGS. 3A, 3B, and 3C, depends on the need of individual users. For example, ITE device 310A has a relatively large size to accommodate a relatively large amplifier to serve the need of individuals suffering severe hearing loss. The relatively large size can also be utilized to house a relatively large size battery. On the other hand, CIC device 310C is almost invisible,

IPR2024-01302 Page 00004

while the room for the circuit and the battery is very limited. Generally, the selection of the device type is a compromise among considerations such as the user's degree of hearing loss (if applicable), ear canal size, desire of invisibility, desired longevity between battery replacements or recharges, and cost.

[0029] FIG. 4A is a block diagram showing one embodiment of the circuit of ear-level device shown in FIGS. 3A, 3B, or 3C used as the single ear-level device 110. The circuit is housed in an earmold configured for use as one of the device types illustrated as ear-level devices 310A, 310B, or 310C.

[0030] Ear-level device 110 includes an external microphone 420, an ear canal microphone 440, an car canal speaker 470, a processor 460, a wireless transceiver 450, an antenna 455, a voice operated exchange (VOX) circuit 430, and a battery 480. External microphone 420 picks up ambient sound such that a hearing impaired person wearing ear-level device 110 is not "isolated" when communicating to remote device 190. Thus, ear-level device enables the hearing impaired person to talk to another person either directly (if the other person is nearby) or through a device such as a cell phone. Ear canal microphone 440 detects sound from the ear canal. The sound includes primarily speech of the person wearing ear-level device 110. Ear canal speaker 470 transmits sound received from remote device 190 and/or external microphone 420 to the same ear canal. In one embodiment, ear canal microphone 440 and ear canal speaker 470 are implemented as one physical device. Processor 460 converts the sound picked up from the ear canal to an electrical signal to be transmitted to remote device 190, and converts the signals received from remote device 190 and/or external microphone 420 to a sound audible to the person wearing ear-level device 110. In one embodiment, processor 460 includes one or more of amplification circuitry, filtering circuitry, acoustic feedback reduction circuitry, noise reduction circuitry, and tone control circuitry, among other circuits performing signal processing functions as known in the art In one embodiment, processor 460 includes a speech recognition module to enhance the audio signal received by and/or transmitted from ear-level device 110. Wireless transceiver 450 and antenna 455 form a telemetry interface supporting telemetry link 195 between ear-level device 110 and remote device 190. Wireless transceiver 450 includes a wireless transmitter and a wireless receiver. The wireless transmitter receives the electrical signal representing the sound picked up from the ear canal from processor 460 and transmits an outgoing wireless signal representing the same sound to remote device 190. The wireless receiver receives an incoming wireless signal representing a remote sound from remote device 190 and transmits an electrical signal representing the remote sound to processor 460. Telemetry link 195 provides for bi-directional communication allowing simultaneous signal transmission, in both directions, between ear-level device 110 and remote device 190. VOX circuit 430 activates a major portion of ear-level device 110 only when sound is detected by at least one of external microphone 420, ear canal microphone 440, end wireless transceiver 450. In one embodiment, VOX circuit 430 includes a voice-controlled switch connecting between battery 480 and the portions of ear-level device 110 that are voice activated. The switch is driven by the sound detected by at least one of external microphone 420, ear canal microphone 440, and wireless transceiver 450. It is turned on when sound detected by external microphone 420 exceeds a predetermined threshold, when sound detected by ear canal microphone 440 exceeds another predetermined threshold, and/or when wireless transceiver 450 receives the incoming wireless signal representing the remote sound. In one embodiment, as discussed with respect to FIG. 4B below, VOX circuit 430 gates or attenuates one or more sounds detected by external microphone 420, ear canal microphone 440, and wireless transceiver 450, to eliminate or reduce echo and ringing caused by the loop formed by ear canal speaker 470 and ear canal microphone 440. Battery 480 supplies the power needed for the operation of ear-level device 110. In one embodiment, battery 480 is a rechargeable battery that can be recharged without being taken out from ear-level device 110.

[0031] FIG. 4B is a block diagram showing one embodiment of portions of VOX circuit 430. In this embodiment, VOX circuit 430 includes an ambient sound gating module 421 that blanks or attenuates the sound detected by external microphone 420, an occluded sound gating module 441 that blanks or attenuates the sound detected by ear canal microphone 440, a remote sound gating module 451 that blanks or attenuates the sound detected by wireless transceiver 450, and controller 431 to coordinate the states of the gating modules. Because ear canal microphone 440 is capable of detecting the sound delivered to the ear canal from ear canal speaker 470, there is a need to avoid echo and/or ringing. For example, a remote sound from remote device 190 delivered to the ear canal may be detected as an occluded sound and transmitted back to remote device 190, causing echo. The gating modules function in a coordinated manner to eliminate or reduce such echo and/or ringing caused by breaking, or applying resistance into, the audio loop formed by ear canal speaker 470 and ear canal microphone 440.

[0032] For the purpose of description, each of the gating modules is "on" when sound is "gated on" and "off" when the sound is "gated off" A sound is "gated on" when it is allowed to pass and be processed, and is "gated off' when it is blanked or substantially attenuated. Blanking refers to a substantially complete blockage of a sound, or in other words, that a detected sound is practically ignored by processor 460 such that it does not cause any echo or ringing that is audible by an ear. Substantial attenuation refers to an attenuation after which the attenuated sound does not cause any echo

IPR2024-01302 Page 00005

or tinging having an intolerable intensity.

[0033] Ambient sound gating module 421 includes a voice-driven switch or attenuator driven by the output of a comparator that compares the amplitude of a detected ambient sound with a predetermined threshold for the ambient sound. When the amplitude of the detected ambient sound exceeds the threshold for the ambient sound, and when controller 431 permits, ambient sound gating module 421 is turned on. When the amplitude of the detected ambient sound drops below the threshold for the ambient sound, ambient sound gating module 421 is turned off. In one embodiment, after the amplitude of the detected ambient sound drops below the threshold for the ambient sound, ambient sound gating module 421 is turned off after a predetermined delay.

[0034] Occluded sound gating module 441 includes a voice-driven switch or attenuator driven by the output of a comparator that compares the amplitude of a detected occluded sound with a predetermined threshold for the occluded sound. When the amplitude of the detected occluded sound exceeds the threshold for the occluded sound, and when controller 431 permits, occluded sound gating module 441 is turned on. When the amplitude of the detected occluded sound drops below the threshold for the occluded sound, occluded sound gating module 441 is turned off. In one embodiment, after the amplitude of the detected occluded sound drops below the threshold for the occluded sound, occluded sound gating module 441 is turned off after a predetermined delay.

[0035] In one embodiment, remote sound gating module 451 includes a voice-driven switch or attenuator driven by the output of a comparator that compares the amplitude of a remote sound with a predetermined threshold for the remote sound. When the amplitude of the detected remote sound exceeds the threshold for the remote sound, and when controller 431 permits, remote sound gating module 451 is turned on. When the amplitude of the detected remote sound drops below the threshold for the remote sound, remote sound gating module 451 is turned off. In one embodiment, after the amplitude of the detected remote sound drops below the threshold for the remote sound, remote sound gating module 451 is turned off after a predetermined delay.

[0036] In another embodiment, remote sound gating module 451 includes a switch or attenuator driven by the detection of the incoming wireless signal representing the remote sound. Remote sound gating module 451 is turned on upon detection of the incoming wireless signal when controller 431 permits, and turned off when the incoming wireless signal is no longer detected. In one embodiment, remote sound gating module 451 is turned off after the incoming wireless signal is absent for a predetermined period.

[0037] Controller 431 coordinates the on/off states of all the gating modules so the sounds are processed in an orderly fashion. Even if a sound is detected, the gating module corresponding to that sound is turned on only when controller 431 permits. In one embodiment, assuming that sounds A and B are gated by gating modules A and B, respectively, if both sounds A and B are detected, whichever sound is detected earlier is gated on. That is, if sound A exceeds its threshold first, gating module A is turned on and remain on until sound A drops below threshold A. Then, gating module B is turned only if sound B exceeds its threshold after gating module A has been turn off.

[0038] In one embodiment, controller 431 coordinates the on/off states of all the gating modules according to predetermined or programmed gating coordination rules. According to one exemplary rule, ambient sound gating module 421 is off, occluded sound gating module 441 is off, and remote sound gating module 451 is on. This rule allows only the transmission of the remote sound to ear canal 303, and prevents the remote sound from being detected by ear canal microphone 440 and echoed back to remote device 190. According to another exemplary rule, ambient sound gating module 421 is on, occluded sound gating module 441 is off, and remote sound gating module 451 is on. This rule allows the transmission of both the remote sound and the ambient sound to ear canal 303, and prevents the remote sound from being detected by ear canal microphone 440 and echoed back to remote device 190. This also prevents the ambient sound from being transmitted to remote device 190. According to yet another exemplary rule, ambient sound gating module 421 is off, occluded sound gating module 441 is on, and remote sound gating module 451 is off. When the person wearing ear-level device 110 speaks, both external microphone 420 and ear canal microphone 440 detect the voice. The voice as detected by ear-level device 110 is first transmitted to remote device 190. Without the gating modules (or when ambient sound gating module 421 and occluded sound gating module 441 are both on), the same voice as detected by external microphone 420 is transmitted to ear canal 303, and therefore again detected by ear canal microphone 440, and again be transmitted to remote device 190. This rule allows only the transmission of the occluded sound to remote device 190, and prevents the same sound from being transmitted to remote device 190 twice. Other rules are applied as a person skilled in the art should see fit based on an understanding after reading this entire document.

[0039] FIG. 5 is a block diagram showing another embodiment of the circuit of ear-level device shown in FIGS. 3A, 3B, or 3C used as each of ear-level devices 210A and 210B. The circuit of each of ear-level devices 210A and 210B is housed in an earmold configured for use as of one of the device types illustrated as ear-level devices 310A, 310B, or 310C.

[0040] Ear-level device 210A is an audio transmitter that includes an ear canal microphone 540, a processor 560A, a wireless transmitter 550A, an antenna 555A, a transmitter VOX circuit 530A, and a battery 580A. Ear canal microphone 540 detects sound from the ear canal.

IPR2024-01302 Page 00006

The sound includes primarily speech of the person wearing ear-level device 210A. Processor 560A converts the sound picked up from the ear canal to an electrical signal to be transmitted to remote device 290. In one embodiment, processor 560A includes one or more of amplification circuitry, filtering circuitry, acoustic feedback reduction circuitry, noise reduction circuitry, and tone control circuitry, among other circuits performing signal processing functions as known in the art. In one embodiment, processor 560A includes a speech recognition module used to enhance the sound transmitted from ear-level device 210A. Wireless transmitter 550A and antenna 555A form a telemetry interface supporting signal transmission from ear-level device 210A to remote device 290. Wireless transmitter 550A receives the electrical signal representing the sound picked up from the ear canal from processor 560A and transmits an outgoing wireless signal representing the same sound to remote device 290. VOX circuit 530A activates a major portion of ear-level device 210A only when sound is detected by ear canal microphone 540. In one embodiment, VOX circuit 530A includes a voice-controlled switch connecting between battery 580A and the portions of ear-level device 210A that are voice activated. The switch is driven by the sound detected by ear canal microphone 540. It is turned on when sound detected by ear canal microphone 540 exceeds a predetermined threshold. In one embodiment, VOX circuit 530A activates processor 560A when the sound is detected. In one further embodiment, VOX circuit 530A also activates wireless transmitter 550A when the sound is detected. Battery 580A supplies the power needed for the operation of ear-level device 210A. In one embodiment, battery 580A is a rechargeable battery that can be recharged without being taken out from ear-level device 210A.

[0041] Ear-level device 210B is an audio receiver that includes an external microphone 520, an ear canal speaker 570, a processor 560B, a wireless receiver 550B, an antenna 555B, a receiver VOX circuit 530B, and a battery 580B. External microphone 520 picks up ambient sound such that the person wearing ear-level devices 210A and 210B is not "isolated" when communicating to remote device 290. It allows that person to talk to a nearby person directly, without the need to take off ear-level devices 210A and/or 210B. Bar canal speaker 570 transmits sound received from remote device 290 and/or external microphone 520 to the same ear canal. Processor 560B converts the signals received from remote device 290 and/or external microphone 520 to a sound audible to the person wearing ear-level device 210B. In one embodiment, processor 560B includes one or more of amplification circuitry, filtering circuitry, acoustic feedback reduction circuitry, noise reduction circuitry, and tone control circuitry, among other circuits performing signal processing functions as known in the art. In one embodiment, processor 560B includes a speech recognition module used to enhance the audio signals received by ear-level device 210B. Wireless receiver 550B and antenna 555B form a telemetry interface supporting signal transmission from remote device 290 to ear-level device 210B. Wireless receiver 550B receives an incoming wireless signal representing a remote sound from remote device 290 and transmits an electrical signal representing the remote sound to processor 560B. VOX circuit 530B activates a major portion of ear-level device 110 only when sound is detected by at least one of external microphone 520 and wireless receiver 550B. In one embodiment, VOX circuit 530B includes a voice-controlled switch connecting between battery 580B and the portions of ear-level device 210B that are voice activated. The switch is driven by the sound detected by at least one of external microphone 520 and wireless receiver 550B. It is turned on when sound detected by external microphone 520 exceeds a predetermined threshold and/or when wireless transceiver 550B receives the incoming wireless signal representing the remote sound. In one embodiment, VOX circuit 530B activates processor 560B when the sound is detected. In one further embodiment, VOX circuit 530B also activates ear-level speaker 570 when the sound is detected. Battery 580B supplies the power needed for the operation of ear-level device 210B. In one embodiment, battery 580B is a rechargeable battery that can be recharged without being taken out from ear-level device 210B.

[0042] System 200 accommodates a larger overall circuit size without necessarily increasing the size of each ITE device. While two separate ear-level devices are required, because system 200 includes separate audio transmitter (ear-level device 210A) and receiver (ear-level device 210B) disposed in the ear canals of opposite ears, ear canal speaker 570 and ear canal microphone 540 do not form a loop causing echo and ringing.

[0043] FIG. 6 is an illustration of an exemplary exterior configuration of an ear-level device including a behind-the-ear (BTE) device 610 used as ear-level device 110 or one of ear-level devices 210A and 210B. BTE device 610 is attached to ear 101 with pinna 302 and ear canal 303. In one embodiment, BTE device 610 is used when none of ITE device 310A, PTC device 310B, and CIC device 310C provides sufficient space accommodating the required circuit and battery sizes. For the purpose of this document, only a device attached to a right ear is shown for each exterior structure. It is to be understood that each of ear-level devices 110, 210A, and 210B can be either a BTE device configured for right ear attachment or a BTE device configured for left ear attachment. Generally, a BTE device configured for right ear attachment has a substantially symmetrical appearance to a device of the same type configured for left ear attachment In system 100, ear-level device 110 is a device configured either for right ear attachment or for left ear attachment. In system 200, either one of ear-level device 210A and 210B is a device structured for right

IPR2024-01302 Page 00007

ear attachment, while the other is a device structured for left ear attachment.

[0044] BTE device 610 includes a behind-the-ear-module (BTE module) 611 and an in-the-ear module (ITE module) 612. ITE module 612 includes a custom or modular earmold. In one embodiment, the earmold is fully occluded to maximize audio efficiency. In another embodiment, the earmold is vented to remove undesirable low frequency sound.

[0045] FIG. 7 is a block diagram showing one embodiment of the circuit of ear-level device shown in FIG. 6 used as ear-level device 110. The exterior configuration of ear-level device 110 is of the type illustrated as BTE device 610.

[0046] Ear-level device 110 configured as BTE device 610 differs from ear-level device 110 configured as ITE/ITC/CIC devices 310A/310B/310C primarily in the physical arrangement of device components. By way of example, but not by way of limitation, FIG. 7 illustrates one embodiment in which BTE module 611 includes external microphone 420, processor 460, wireless transceiver 450, antenna 455, VOX circuit 430, and battery 480, and ITE module 612 includes ear canal microphone 440 and ear canal speaker 470. Other possible embodiments depend on size and other considerations that are known to those skilled in the art. In one embodiment, behind-ear portion 611 includes only battery 480 to maximize the duration of use of ear-level device 110 between battery replacements or recharges.

[0047] FIG. 8 is a block diagram showing another embodiment of the circuit of ear-level device shown in FIG. 6 used as each of ear-level devices 210A and 210B. The exterior configuration of each of ear-level devices 210A and 210B is of the type illustrated as BTE device 610.

[0048] Ear-level devices 210A/210B configured as BTE device 610 differ from ear-level devices 210A/210B configured as ITE/ITC/CIC devices 310A/310B/310C primarily in the physical arrangement of device components. By way of example, but not by way of limitation, FIG. 8 illustrates one embodiment of ear-level device 210A including a BTE module 611A and an ITE module 612A, and ear-level device 210B including a BTE module 611B and an ITE module 612B. BTE module 611A includes processor 560A, wireless transmitter 550A, antenna 555A, transmitter VOX circuit 530A, and battery 580A. ITE module 612A includes ear canal microphone 540. Behind-the-ear portion 611B includes external microphone 520, processor 560B, wireless receiver 550B, antenna 555B, receiver VOX circuit 530B, and battery 580B. ITE module 612B includes ear canal speaker 570. Other possible embodiments depend on size and other considerations that are known to those skilled in the art. In one embodiment, BTE modules 611A and 611B include only batteries 580A and 580B, respectively, to maximize the duration of use of ear-level devices 210A and 210B, respectively, between battery replacements or recharges.

[0049] FIG. 9 is a flow chart illustrating an embodiment of a method for audio communication using system 100 or system 200. The method provides for private, simultaneous two-way communication between a person and a remote device such as a computer, a personal digital assistant (PDA), a cellular phone, a walkie talkie, or a language translator. In this embodiment. VOX is used for power management. A VOX circuit includes a power switch connecting a battery to the portions of the circuit of system 100 or system 200 that are voice activated. The VOX is "on" when the voice-activated portions of the circuit are activated, i.e., when the power switch remains on. It is "started" by turning on the power switch, and "stopped" by turning off the power switch.

[0050] Steps 910-918 illustrate the process of detecting a sound from an ear canal and transmitting it to a remote device. A microphone disposed in an ear canal detects an occluded sound within the ear canal at 910. If the occluded sound is detected at 911, the VOX of the system is started at 912 if it is not already on. The occluded sound is enhanced at 914 with a voice recognition system that improves the signal-to-noise ratio, where the signal is the voice of a speech, and the noise is any sound other than the voice of the speech. The occluded sound is then converted to an outgoing radio signal at 916. The outgoing radio signal representing the occluded sound is transmitted to the remote device at 918.

[0051] Steps 920-928 illustrate the process of detecting a sound sent from the remote device and transmitting it to the ear canal. A radio receiver detects an incoming radio signal representing a remote sound from the remote device at 920. If the incoming radio signal is detected at 921, the VOX of the system is started at 922 if it is not already on. The incoming radio signal is converted to a first incoming audio signal (the remote sound) at 924. The first incoming audio signal is enhanced at 926 with a voice recognition system that improves the signal-to-noise ratio, where the signal is the voice from the remote device, and the noise is any sound other than the voice. A speaker disposed in the ear canal transmits the first incoming audio signal representing the sound from the remote device to the ear canal at 928.

[0052] Steps 930-938 illustrate the process of detecting a sound from the environment and transmit it to the ear canal. A microphone outside the ear canal detects an ambient sound at 930. If the ambient sound is detected at 931, the VOX of the system is started at 932 if it is not already on. The ambient sound is converted to a second incoming audio signal at 934. The second incoming audio signal is enhanced at 936 with a voice recognition system that improves the signal-to-noise ratio, where the signal is any voice included in the ambient sound, and the noise is any sound other than the voice. A speaker disposed in the ear canal transmits the second incoming audio signal representing to the ear canal at 928.

[0053] If no signal (sound or radio signal) is detected

IPR2024-01302 Page 00008

at 911, 921, and 931, the VOX is stopped at 940. In other words, if no sound is to be processed, the communication system is inactivated except for the portions that must be active for sound detection at all times. In one embodiment, the VOX is stopped after a predetermined period of time to avoid frequent activation/deactivation during a conversation.

[0054] Systems 100 and 200 are each a full duplex system capable of performing steps 910-918, 920-928, and 930-938 are performed in parallel and simultaneously. In an embodiment in which system 100 performs the method, ear-level device 110 performs steps 910-918, 924-928, and 930-938. If a signal is detected at 911, 921, or 931, VOX 430 activates at least portions of device 110 performing steps 914-918, 924-928, or 934-938, respectively. If no signal is detected at 911, 921, or 931, VOX 430 deactivates at least the portions of device 110 performing steps 914-918, 924-928, or 934-938, respectively.

[0055] In an embodiment in which system 200 performs the method, ear-level device 210A performs steps 910-918, and ear-level device 210B performs steps 920-928 and 930-930. If a signal is detected at 911, transmitter VOX 530A activates at least portions of device 210A performing steps 914-918. If a signal is detected at 921 or 931, receiver VOX 530B activates at least portions of device 210B performing steps 924-928 or 934-938, respectively. If no signal is detected at 911, transmitter VOX 530A deactivates at least the portions of device 210A performing steps 914-918. If no signal is detected at 921 or 931, receiver VOX 530B deactivates at least the portions of device 210B performing steps 924-928 or 934-938, respectively.

[0056] FIG. 10 is a flow chart illustrating another embodiment of the method for audio communication using system 100. In this embodiment, in addition to power management, the VOX is also used for gating, i.e., blanking or attenuating, sounds. The VOX circuit includes a power switch connecting a battery to the portions of the circuit of system 100 that are voice activated and gating modules capable of blanking or attenuating the occluded sound, the remote sound, and the ambient sound. Examples of such gating modules include occluded sound gating module 441, remote sound gating module 451, and ambient sound gating module 421, designated for the occluded sound, the remote sound, and the ambient sound, respectively.

[0057] Steps 1010-1019 illustrate the process of detecting the occluded sound from the ear canal and transmitting it to the remote device. The microphone disposed in the ear canal detects the occluded sound within the ear canal at 1010. If the occluded sound is detected at 1011, the VOX of the system is started to power the voice-activated portions of the circuit of system 100 at 1012 if they are not already powered. The VOX determines whether to start gating the occluded sound on at 1013. In one embodiment, the occluded sound is gated on when its amplitude exceeds a predetermined threshold and when the effective gating coordination rule permits. Examples of gating coordination rules are described above with respect to FIG. 4B. If the occluded sound is gated on at 1013, it is processed at 1014 by following steps that are identical or similar to steps 914-916-918. The occluded sound is gated off at 1019 if it has been gated on but is no longer detected. In one embodiment, the occluded sound is gated off after it is not detected for a predetermined period.

[0058] Steps 1020-1028 illustrate the process of detecting the remote sound sent from the remote device and transmitting it to the ear canal. A radio receiver detects the incoming radio signal representing the remote sound from the remote device at 1020. If the remote sound is detected at 1021, the VOX of the system is started to power the voice-activated portions of the circuit of system 100 at 1022 if they are not already powered. The VOX determines whether to start gating the remote sound on at 1023. In one embodiment, the remote sound is gated on when its amplitude exceeds a predetermined threshold and when the effective gating coordination rule permits. In another embodiment, the remote sound is gated on when the incoming radio signal is detected and when the effective gating coordination rules permits. If the remote sound is gated on at 1023, it is processed at 1024 by following steps that are identical or similar to steps 924-926-928. The remote sound is gated off at 1029 if it has been gated on but is no longer detected. In one embodiment, the remote sound is gated off after it is not detected for a predetermined period.

[0059] Steps 1030-1038 illustrate the process of detecting the ambient sound and transmit it to the ear canal. A microphone outside the ear canal detects the ambient sound at 1030. If the ambient sound is detected at 1031, the VOX of the system is started to power the voice-activated portions of the circuit of system 100 at 1032 if they are not already powered. The VOX determines whether to start gating the ambient sound on at 1033. In one embodiment, the ambient sound is gated on when its amplitude exceeds a predetermined threshold and when the effective gating coordination rule permits. If the ambient sound is gated on at 1033, it is processed at 1034 by following steps that are identical or similar to steps 934-936-938. The ambient sound is gated off at 1039 if it has been gated on but is no longer detected. In one embodiment, the ambient sound is gated off after it is not detected for a predetermined period.

[0060] If no signal (sound or radio signal) is detected at 1011,1021, and 1031, the VOX is stopped at 1040. In other words, if no sound is to be processed, the communication system is inactivated except for the portions that must be active for sound detection at all times, In one embodiment, the VOX is stopped after a predetermined period of time to avoid Sequent activation/deactivation during a conversation.

[0061] It is to be understood that the above detailed description is intended to be illustrative, and not restric-

IPR2024-01302 Page 00009

tive. Other embodiments will be apparent to those of skill in the art upon reading and understanding the above description. For example, two ear-level devices 110, or a pair of devices each being similar to ear-level device 110, can be used to deliver a stereo sound. The scope of the invention should, therefore, be determined with reference to the appended claims.

Claims

1. A system adapted for use in at least one of a first ear having a first ear canal and a second ear having a second ear canal, comprising:

a first ear-level device including:

a first microphone adapted for use in one of the first ear canal and the second ear canal, the first microphone receiving an occluded sound from about the one of the first ear canal and the second ear canal;
a first processor, connected to the first microphone, to process the occluded sound;
a wireless transmitter, connected to the first processor, to receive the processed occluded sound from the first processor and transmit a first wireless signal representing the occluded sound; and
a first earmold housing at least the first microphone, at least a portion of the first earmold configured for placement in the one of the first ear canal and the second ear canal.

2. The system according to claim 1, wherein the first earmold houses the first microphone, the first processor, and the wireless transmitter, and wherein the first earmold is configured for use as an in-the-ear (ITE) device.

3. The system according to claim 1, wherein the first ear level device comprises an ITE module including the first microphone and a behind-the-ear (BTE) module attached to the ITE module, the BTE module including the first processor and the wireless transmitter.

4. The system according to any of the preceding claims, further comprising a voice operated exchange (VOX) circuit connected to the first processor.

5. The system according to claim 4, wherein the VOX circuit comprises an occluded sound gating module, coupled to the first microphone, to blank or substantially attenuate the occluded sound.

6. The system according to claim 1, further comprising:

a wireless receiver, connected to the first processor, to receive a second wireless signal representing a remote sound; and
a speaker connected to the first processor, the speaker adapted for use in the one of the first ear canal and the second ear canal,

wherein:

the first processor further processes the remote sound, and the speaker is adapted to transmit the processed remote sound to the one of the first ear canal and the second ear canal; and
the first earmold further houses at least the speaker.

7. The system according to claim 6, wherein the first microphone and the speaker include one common device receiving the occluded sound and transmitting the processed remote sound.

8. The system according to any of claims 6 and 7, further comprising a second microphone connected to the first processor, the second microphone adapted to receive an ambient sound from outside the one of the first ear canal and the second ear canal, and wherein:

the first processor further processes the ambient sound; and
the speaker is configured to transmit the processed remote and ambient sounds to the one of the first ear canal and the second ear canal.

9. The system according to claim 8, further comprising a voice operated exchange (VOX) circuit connected to the first processor.

10. The system according to claim 9, wherein the VOX circuit comprises an occluded sound gating module, coupled to the first microphone, to blank or substantially attenuate the occluded sound.

11. The system according to any of claims 9 and 10, wherein the VOX circuit comprises a remote sound gating module, coupled to the wireless transceiver, to blank or substantially attenuate the remote sound.

12. The system according to any of claims 9 -11, wherein the VOX circuit comprises an ambient sound gating module, coupled to the first microphone, to blank or substantially attenuate the ambient sound.

13. The system according to any of the preceding

IPR2024-01302 Page 00010

claims, wherein the first processor comprises a speech recognition module.

14. The system according to any of claims 6 -13, wherein the first earmold houses the first microphone, the first processor, the wireless transmitter, the wireless receiver, and the speaker, and wherein the first carmold is configured for use as an in-the-ear (ITE) device.

15. The system according to claim 14, wherein the first earmold is configured for use as an in-the-canal (ITC) device.

16. The system according to claim 15, wherein the first earmold is configured for use as a completely-in-the-canal (CIC) device.

17. The system according to any of claims 6 - 13, wherein the first ear level device comprises an ITE module including the first microphone and the speaker and a behind-the-ear (BTE) module attached to the ITE module and including the second microphone, the first processor, the wireless transmitter, and the wireless receiver.

18. The system of claim 17, wherein the BTE module comprises a voice operated exchange (VOX) circuit.

19. The system of claim 17, wherein the BTE module comprises a rechargeable battery.

20. The system according to any of claims 6 - 19, further comprising a remote device communicatively coupled to the wireless transmitter and the wireless receiver via a telemetry link providing for simultaneous bi-directional communication between the first ear-level device and the remote device.

21. The system according to claim 20, wherein the remote device comprises at least one of a computer, a personal digital assistant (PDA), a cellular phone, a walkie talkie, or a language translator.

22. The system according to claim 1, wherein the first microphone is adapted for use in the first ear canal and receives the occluded sound from about the first ear canal, wherein the at least the portion of the first earmold is configured for placement in the first ear canal, and further comprising a second ear-level device including:

a wireless receiver to receive a second wireless signal representing a remote sound;
a second processor, connected to the wireless receiver, to convert the second wireless signal to the remote sound;
a speaker connected to the second processor, the speaker adapted for use in the second ear canal to transmit the remote sound to the second ear canal; and
a second earmold housing at least the speaker, at least a portion of the second earmold configured for placement in the second ear canal.

23. The system according to claim 22, wherein the second ear-level device further comprises a second microphone connected to the second processor, the second microphone adapted to receive an ambient sound from outside the second ear canal, and wherein:

the second processor further processes the ambient sound; and
the speaker is configured to transmit the remote sound and the processed ambient sound to the second ear canal.

24. The system according to any of claims 22 and 23, wherein the first ear-level device further comprises a first voice operated exchange (VOX) circuit connected to the first processor, and the second ear-level device further comprises a second VOX circuit connected to the second processor,

25. The system according to any of claims 22 - 24, wherein the first processor and the second processor each comprise a speech recognition module.

26. The system according to any of claims 22 - 25, wherein the first and second ear-level devices are each an behind-the-ear (BTE) device.

27. The system according to any of claims 22 - 25, wherein the first and second ear-level devices are each an in-the-ear (ITE) device.

28. The system according to claim 27, wherein the first and second ear-level devices are each an in-the-canal (ITC) device.

29. The system according to claim 28, wherein the first and second ear-level devices are each an completely-in-the-canal (CIC) device.

30. The system according to any of claims 22 - 29, further comprising a remote device communicatively coupled to the first and second ear-level devices.

31. The system according to claim 30, wherein the remote device comprises at least one of a computer, a personal digital assistant (PDA), a cellular phone, a walkie talkie, or a language translator.

32. A method, comprising:

IPR2024-01302 Page 00011

detecting an occluded sound using a first microphone adapted for use in an ear canal;
detecting an incoming radio signal representing a remote sound from the remote device;
starting a voice operated exchange (VOX) housed within an ear-level communication device when at least one of the occluded sound and the incoming radio Signal is detected if the VOX is not already on, the ear-level communication device being one of an in-the-ear (ITE) device and a behind-the-ear (BTB) device;
gating the occluded sound on, and gating the remote sound off, when the occluded sound is detected while the incoming radio signal is not detected; and
gating the remote sound on, and gating the occluded sound off, when the incoming radio signal is detected while the occluded sound is not detected.

33. The method according to claim 32, wherein detecting the occluded sound comprises comparing an amplitude of the occluded sound to an occluded sound threshold, wherein the occluded sound is detected when the amplitude of the occluded sound exceeds the occluded sound threshold.

34. The method according to any of claims 32 and 33, wherein detecting the incoming radio signal comprises comparing an amplitude of the remote sound to a remote sound threshold, wherein the incoming radio signal is detected when the amplitude of the remote sound exceeds the remote sound threshold.

35. The method according to any of claims 32 - 34, further comprising detecting an ambient sound using a second microphone, and wherein starting the VOX comprises starting the VOX when at least one of the occluded sound, the incoming radio signal, and the ambient sound is detected if the VOX is not already on.

36. The method according to claim 35, further comprising gating the occluded sound off, gating the remote sound on, and gating the ambient sound off, when the incoming radio signal is detected while the occluded sound is not detected.

37. The method according to claim 35, further comprising gating the occluded sound off, gating the remote sound on, and gating the ambient sound on, when the incoming radio signal is detected while the occluded sound is not detected.

38. The method according to claim 35, further comprising gating the occluded sound on, gating the remote sound off, and gating the ambient sound off, when the occluded sound is detected while the incoming radio signal is not detected.

IPR2024-01302 Page 00012

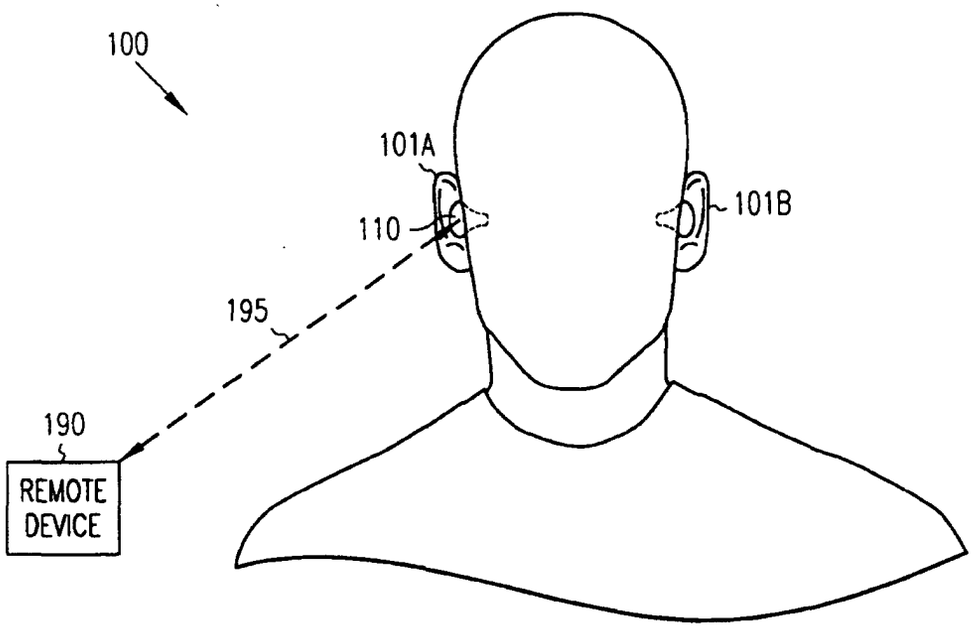
100
101A
101B
110
195
190
REMOTE DEVICE

FIG. 1

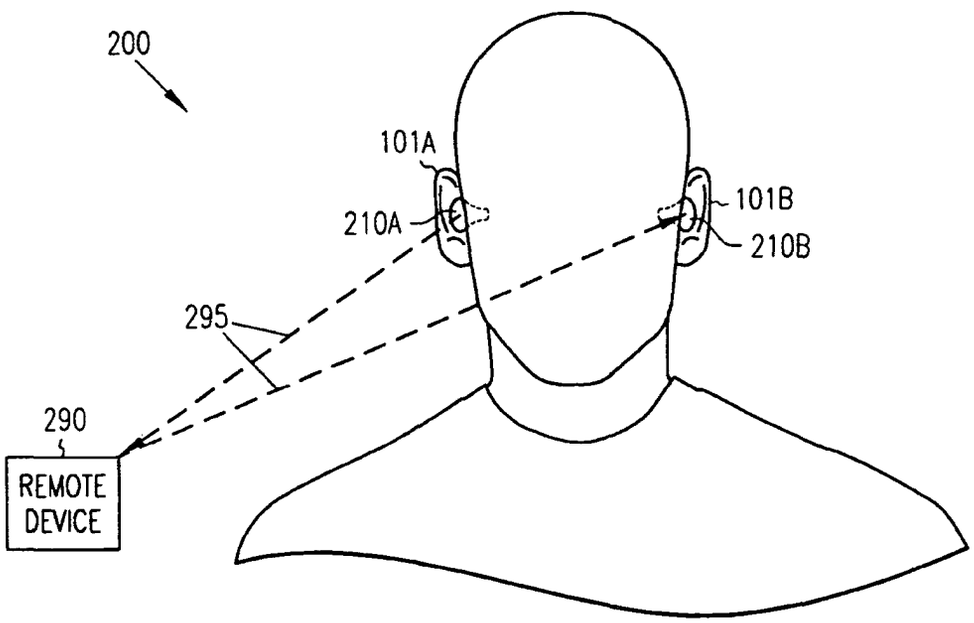
200
101A
101B
210A
210B
295
290
REMOTE DEVICE

FIG. 2

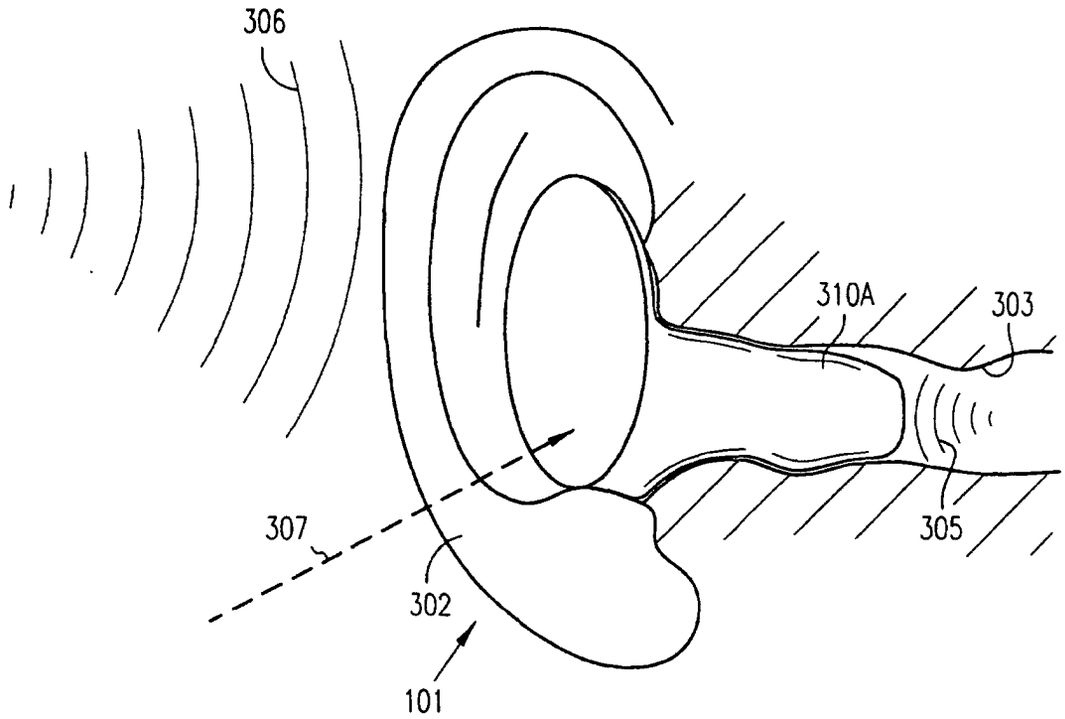

FIG. 3A

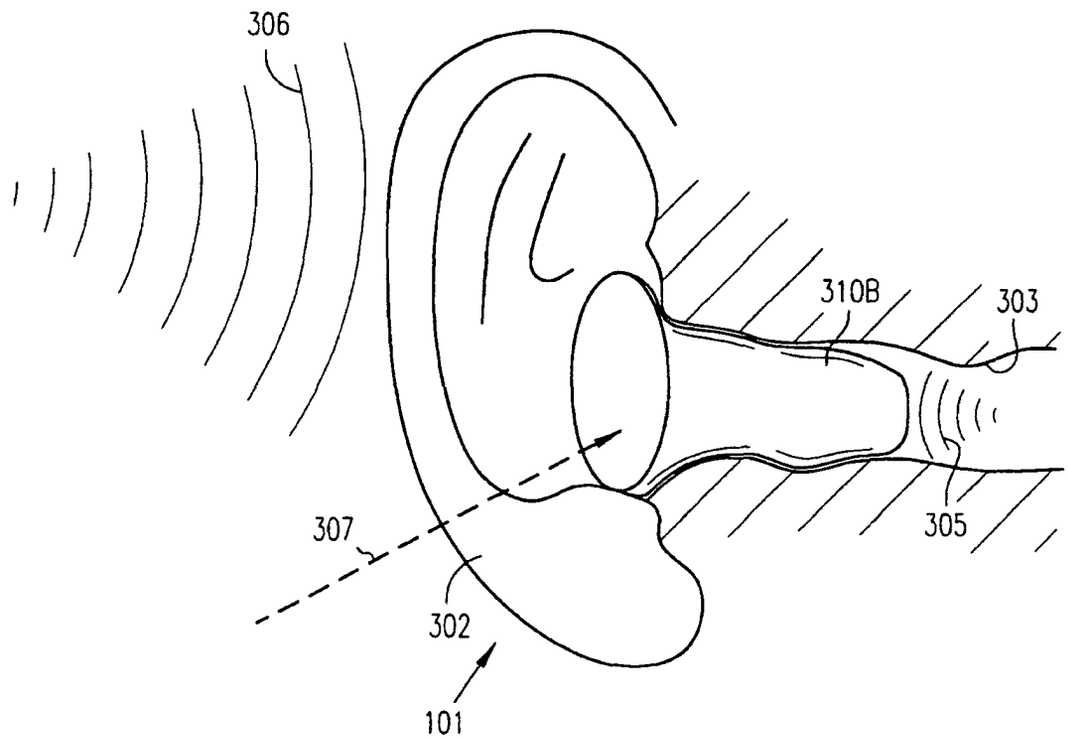

FIG. 3B

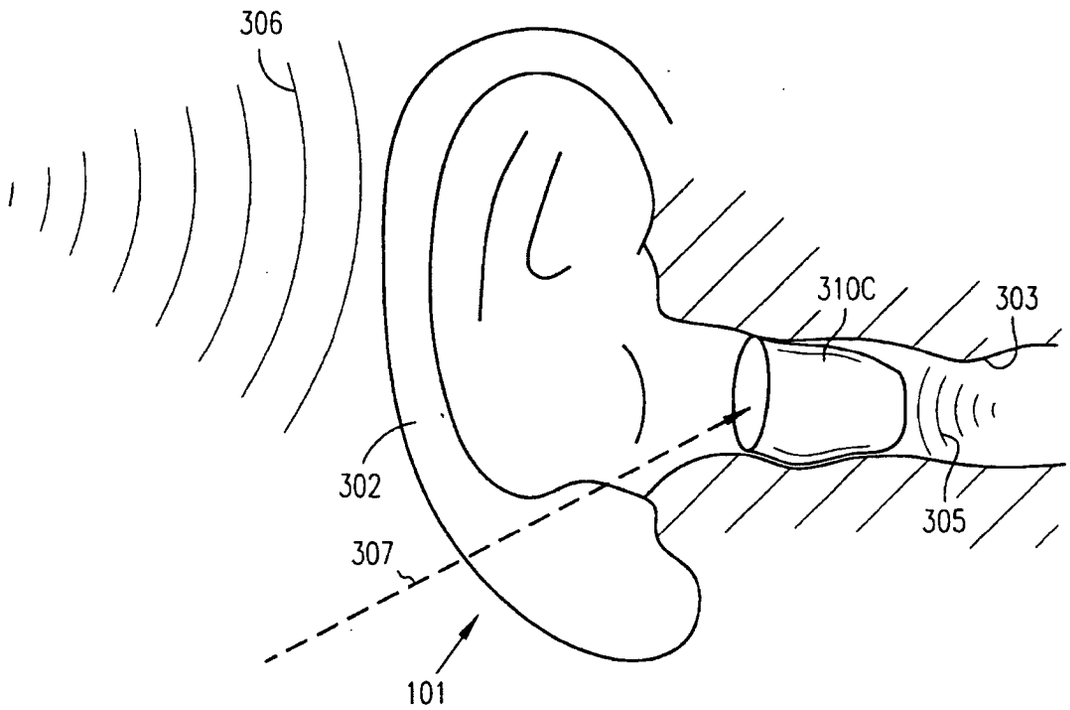

FIG. 3C

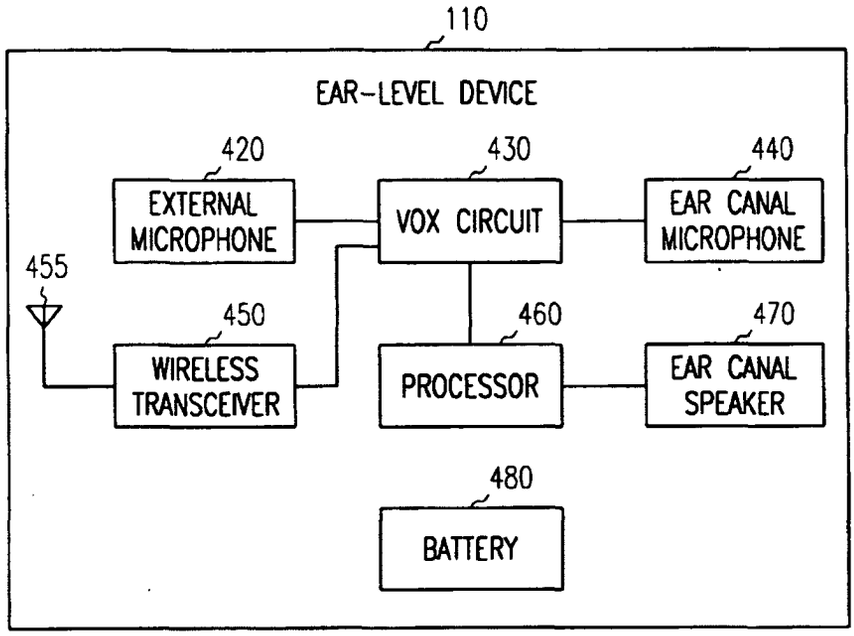
110
EAR-LEVEL DEVICE
420
EXTERNAL MICROPHONE
430
VOX CIRCUIT
440
EAR CANAL MICROPHONE
455
450
WIRELESS TRANSCEIVER
460
PROCESSOR
470
EAR CANAL SPEAKER
480
BATTERY

FIG. 4A

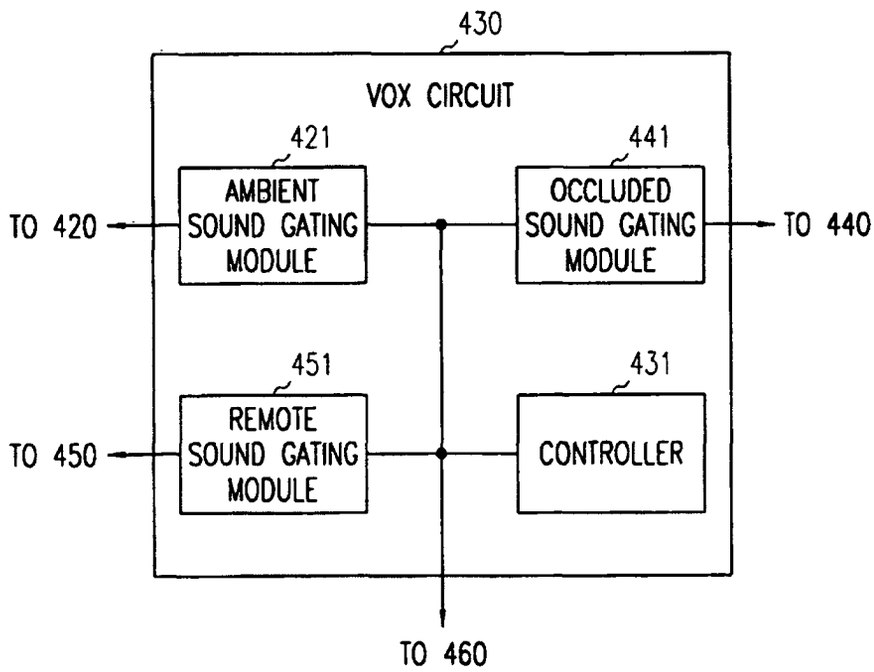
430
VOX CIRCUIT
421
AMBIENT SOUND GATING MODULE
441
OCCLUDED SOUND GATING MODULE
TO 420
TO 440
451
REMOTE SOUND GATING MODULE
431
CONTROLLER
TO 450
TO 460

FIG. 4B

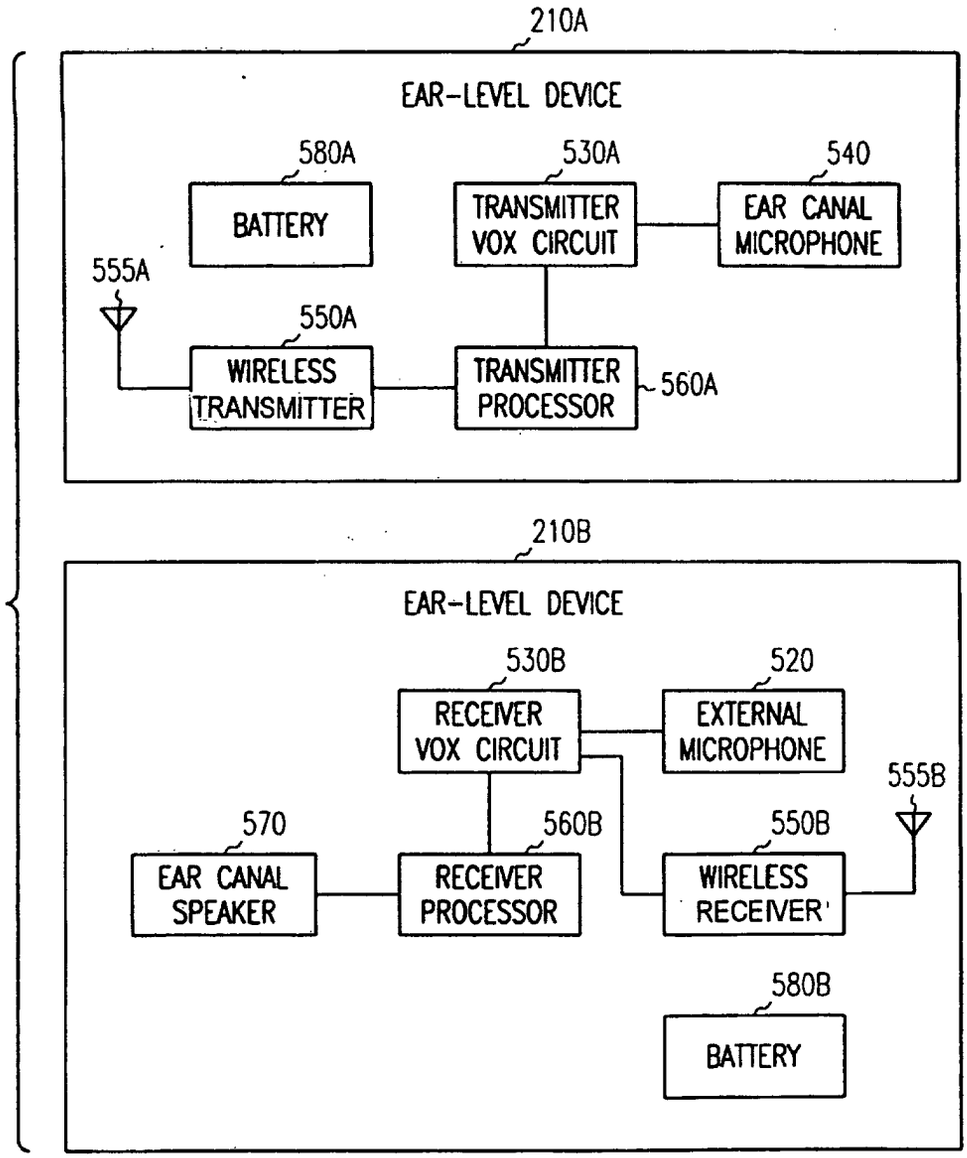
210A
EAR-LEVEL DEVICE
580A
BATTERY
530A
TRANSMITTER VOX CIRCUIT
540
EAR CANAL MICROPHONE
555A
550A
WIRELESS TRANSMITTER
TRANSMITTER PROCESSOR
560A
210B
EAR-LEVEL DEVICE
530B
RECEIVER VOX CIRCUIT
520
EXTERNAL MICROPHONE
555B
570
EAR CANAL SPEAKER
560B
RECEIVER PROCESSOR
550B
WIRELESS RECEIVER
580B
BATTERY

FIG. 5

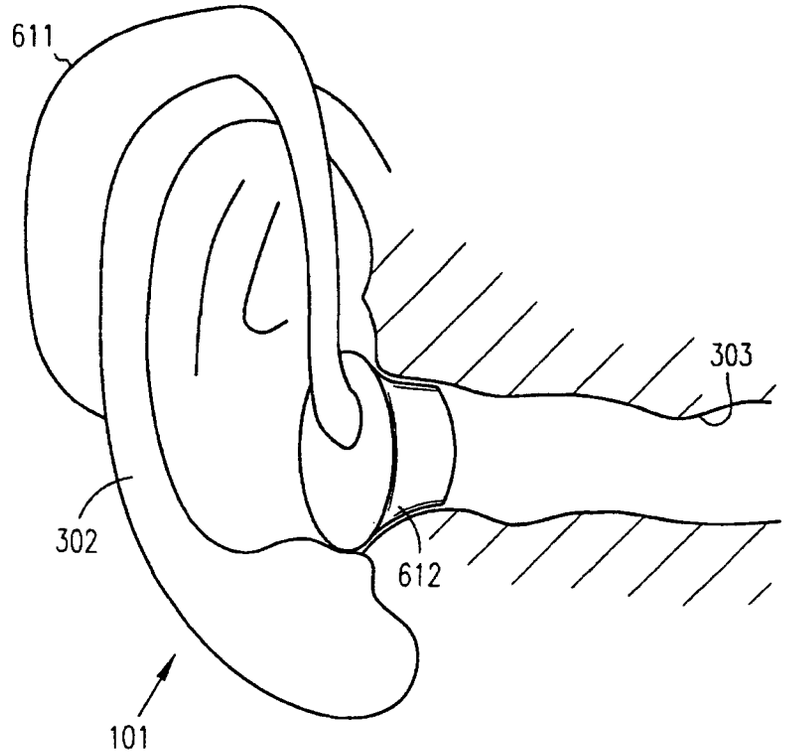
611
303
302
612
101

FIG. 6

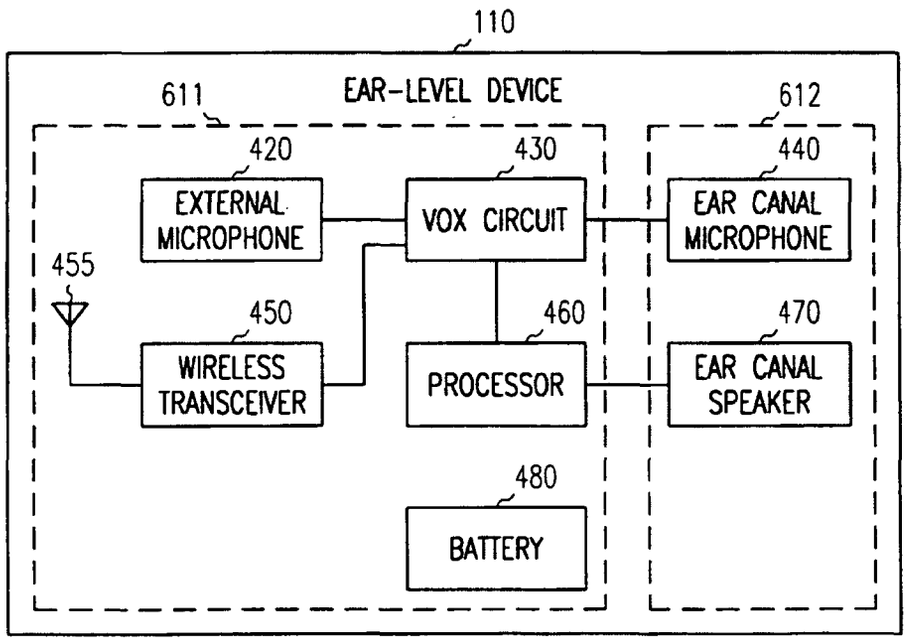
110
611
EAR-LEVEL DEVICE
612
420
430
440
EXTERNAL MICROPHONE
VOX CIRCUIT
EAR CANAL MICROPHONE
455
450
460
470
WIRELESS TRANSCEIVER
PROCESSOR
EAR CANAL SPEAKER
480
BATTERY

FIG. 7

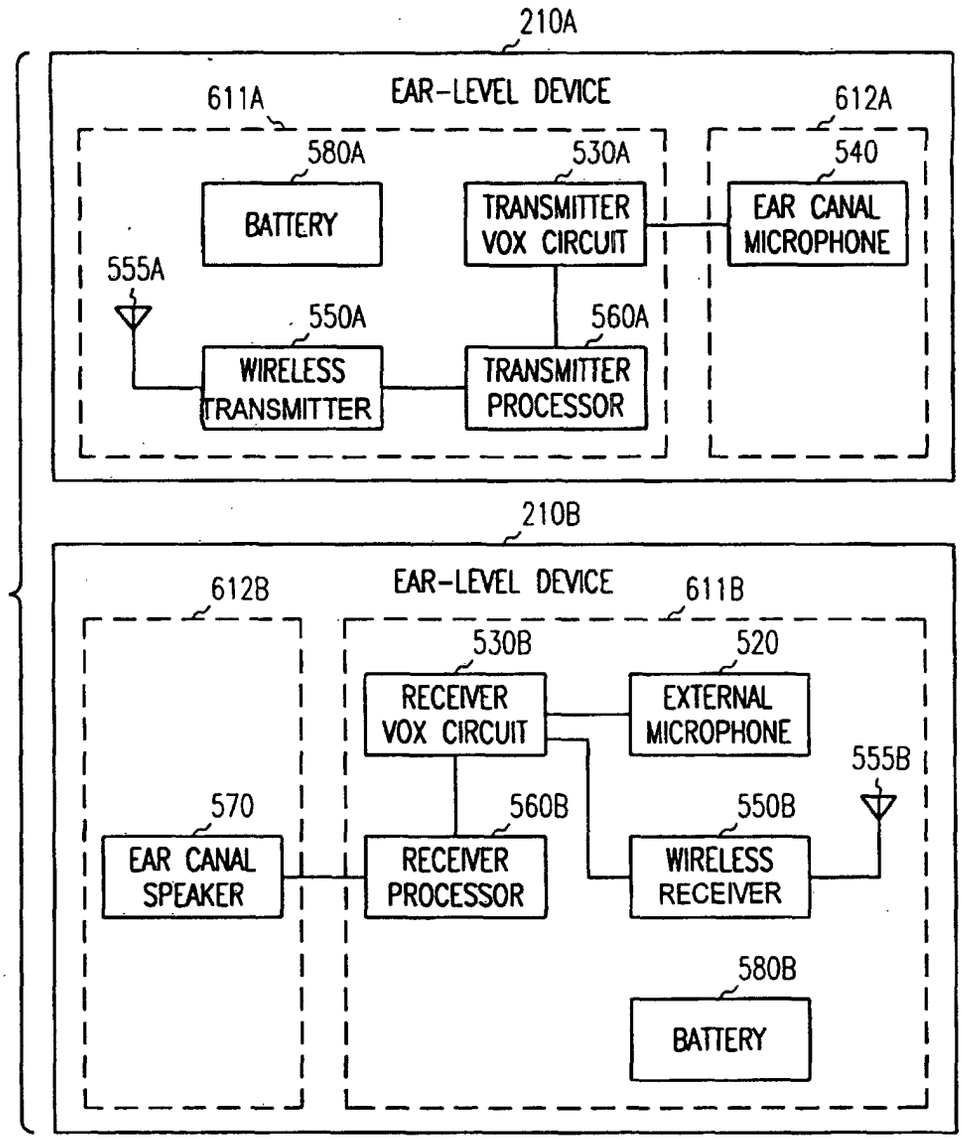
210A
EAR-LEVEL DEVICE
611A
612A
580A
530A
540
BATTERY
TRANSMITTER VOX CIRCUIT
EAR CANAL MICROPHONE
555A
550A
560A
WIRELESS TRANSMITTER
TRANSMITTER PROCESSOR
210B
EAR-LEVEL DEVICE
612B
611B
530B
520
RECEIVER VOX CIRCUIT
EXTERNAL MICROPHONE
555B
570
560B
550B
EAR CANAL SPEAKER
RECEIVER PROCESSOR
WIRELESS RECEIVER
580B
BATTERY

FIG. 8

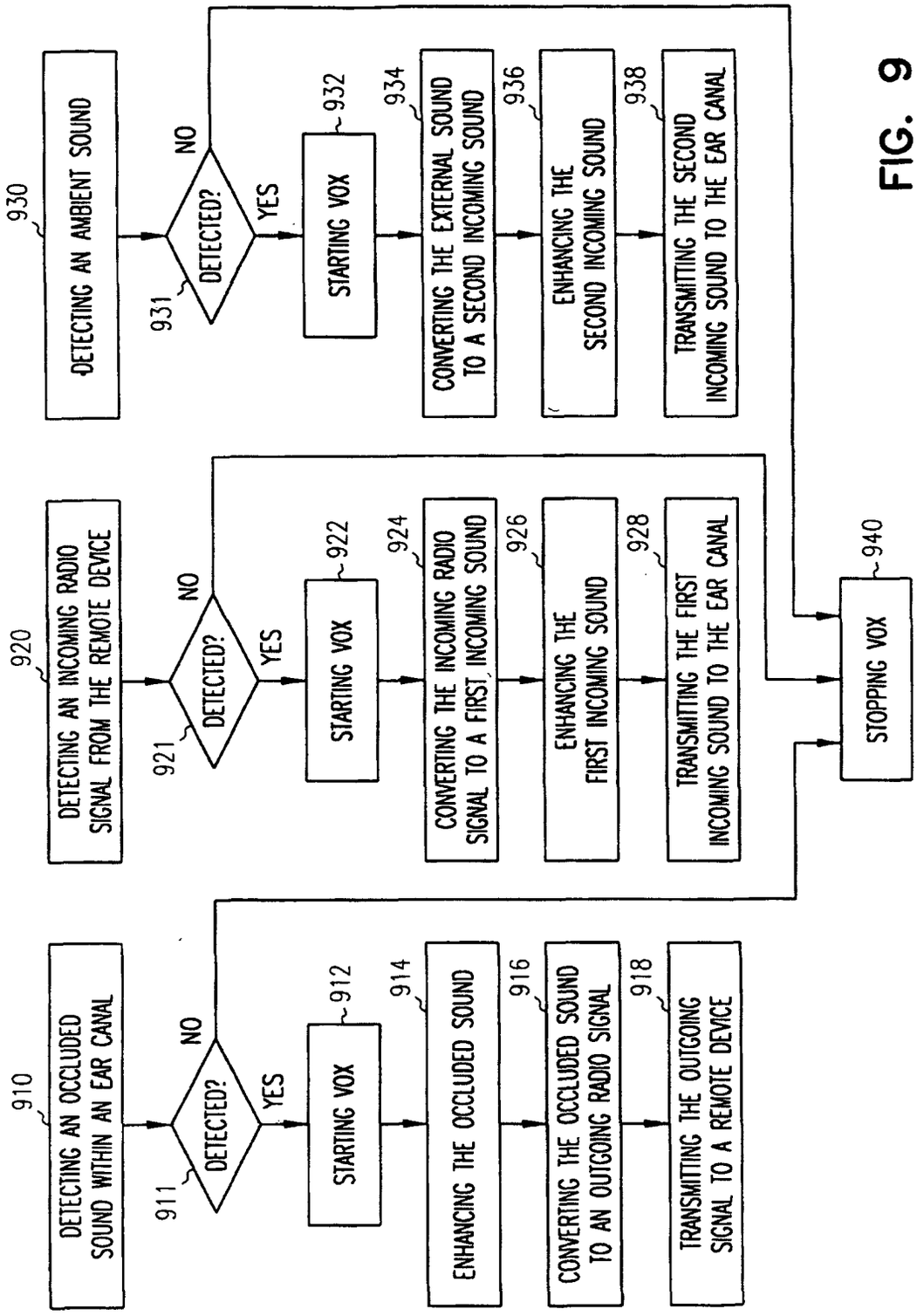
910
DETECTING AN OCCLUDED SOUND WITHIN AN EAR CANAL
911
DETECTED?
YES
NO
912
STARTING VOX
914
ENHANCING THE OCCLUDED SOUND
916
CONVERTING THE OCCLUDED SOUND TO AN OUTGOING RADIO SIGNAL
918
TRANSMITTING THE OUTGOING SIGNAL TO A REMOTE DEVICE
920
DETECTING AN INCOMING RADIO SIGNAL FROM THE REMOTE DEVICE
921
DETECTED?
YES
NO
922
STARTING VOX
924
CONVERTING THE INCOMING RADIO SIGNAL TO A FIRST INCOMING SOUND
926
ENHANCING THE FIRST INCOMING SOUND
928
TRANSMITTING THE FIRST INCOMING SOUND TO THE EAR CANAL
930
DETECTING AN AMBIENT SOUND
931
DETECTED?
YES
NO
932
STARTING VOX
934
CONVERTING THE EXTERNAL SOUND TO A SECOND INCOMING SOUND
936
ENHANCING THE SECOND INCOMING SOUND
938
TRANSMITTING THE SECOND INCOMING SOUND TO THE EAR CANAL
940
STOPPING VOX

FIG. 9

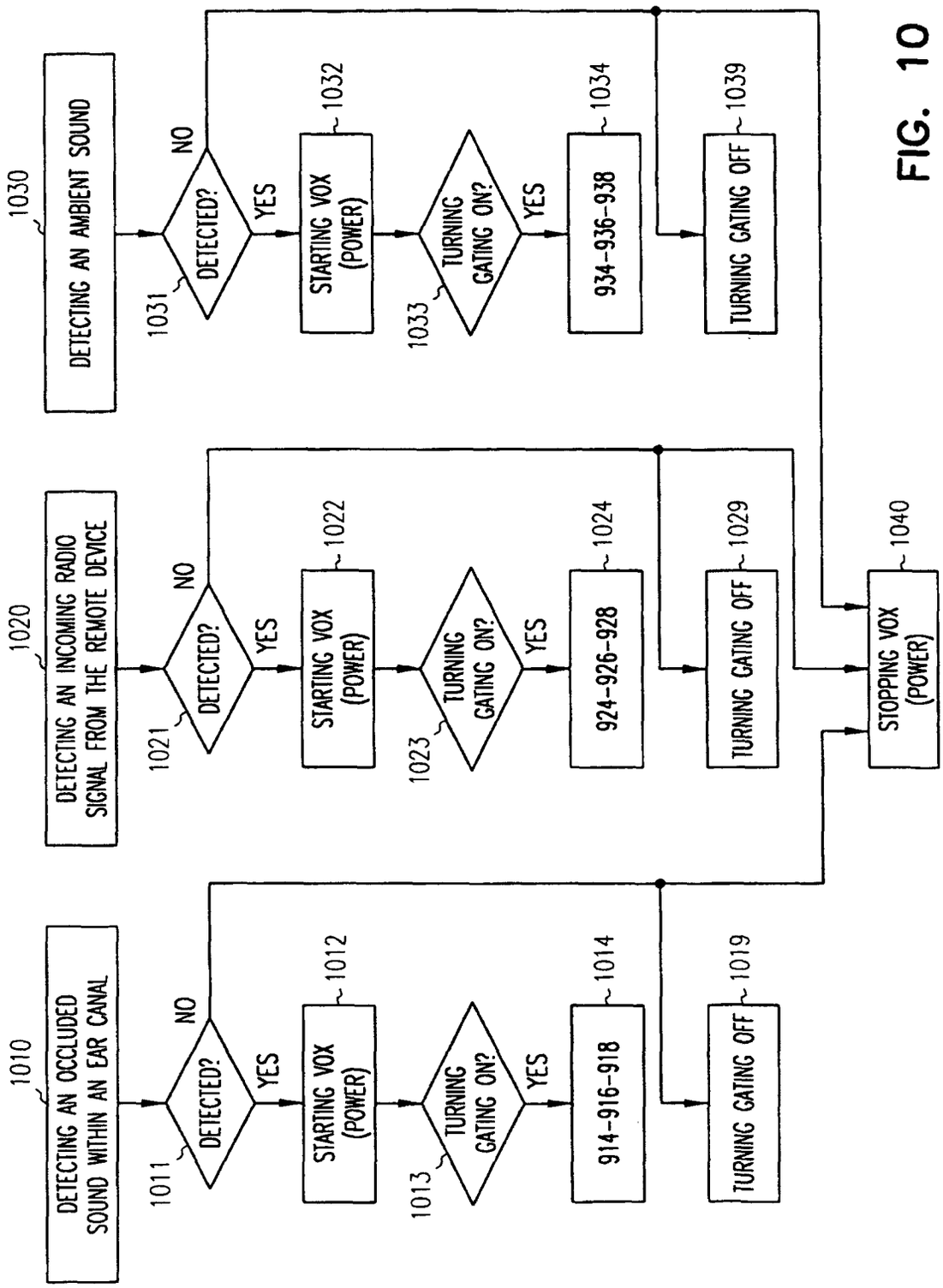
1010
DETECTING AN OCCLUDED SOUND WITHIN AN EAR CANAL
1011
DETECTED?
NO
YES
1012
STARTING VOX (POWER)
1013
TURNING GATING ON?
YES
1014
914-916-918
1019
TURNING GATING OFF
1020
DETECTING AN INCOMING RADIO SIGNAL FROM THE REMOTE DEVICE
1021
DETECTED?
NO
YES
1022
STARTING VOX (POWER)
1023
TURNING GATING ON?
YES
1024
924-926-928
1029
TURNING GATING OFF
1030
DETECTING AN AMBIENT SOUND
1031
DETECTED?
NO
YES
1032
STARTING VOX (POWER)
1033
TURNING GATING ON?
YES
1034
934-936-938
1039
TURNING GATING OFF
1040
STOPPING VOX (POWER)

FIG. 10