US 20020068558A1

(19) United States

(12) Patent Application Publication

(10) Pub. No.: US 2002/0068558 A1

(43) Pub. Date: Jun. 6, 2002

Janik

(54) SYSTEM AND METHOD FOR PROVIDING CONTENT, MANAGEMENT, AND INTERACTIVITY FOR CLIENT DEVICES

(76) Inventor: **Craig M. Janik**, Los Altos Hills, CA (US)

Correspondence Address:
Archana B. Vittal
BLAKELY, SOKOLOFF, TAYLOR & ZAFMAN LLP
Seventh Floor
12400 Wilshire Boulevard
Los Angeles, CA 90025-1026 (US)

(21) Appl. No.: **09/924,646**

(22) Filed: **Aug. 7, 2001**

Related U.S. Application Data

(63) Continuation-in-part of application No. 09/841,268, filed on Apr. 24, 2001. Non-provisional of provisional application No. 60/199,638, filed on Apr. 25, 2000. Non-provisional of provisional application No. 60/268,434, filed on Feb. 12, 2001. Non-provisional of provisional application No. 60/223,872, filed on Aug. 8, 2000.

Publication Classification

(51) **Int. Cl.**[7] **H04Q 7/20**

(52) **U.S. Cl.** **455/422**; 455/418

(57) **ABSTRACT**

A system and a method for providing content, management and interactivity for client devices are provided. Digital data based on user specified preferences is automatically obtained and transferred from a wi

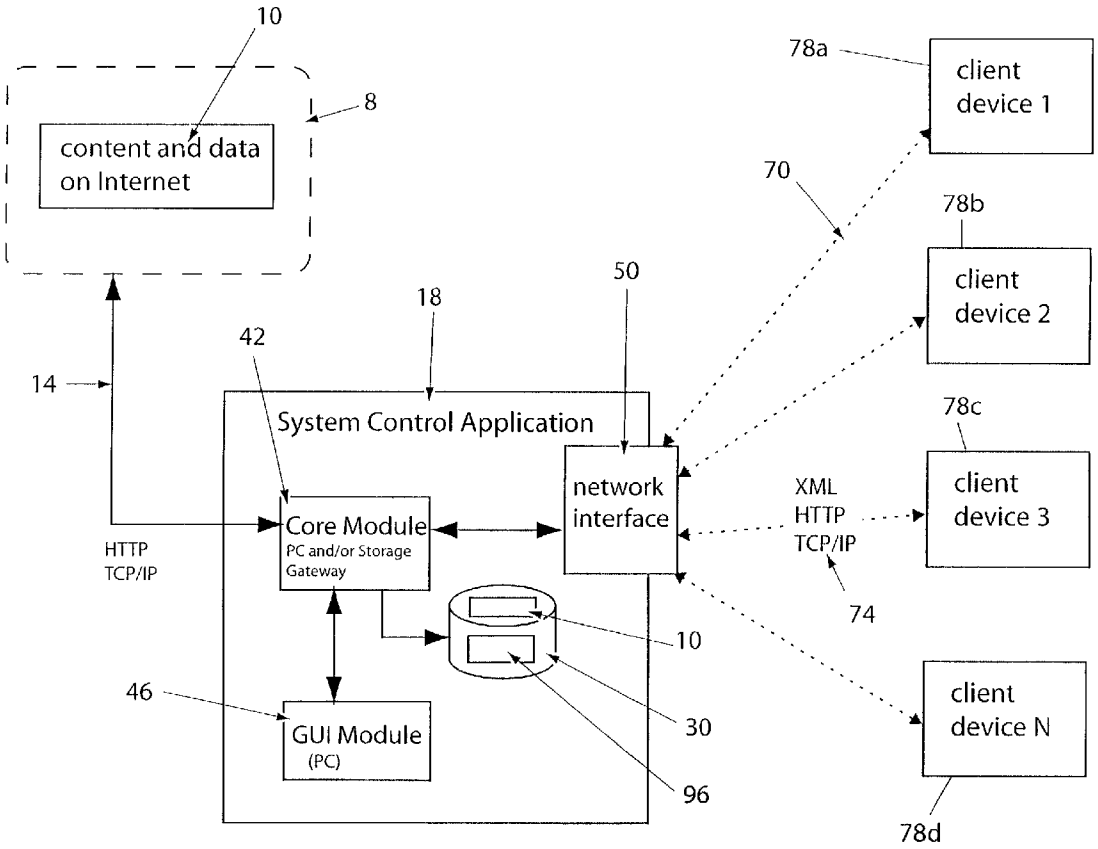

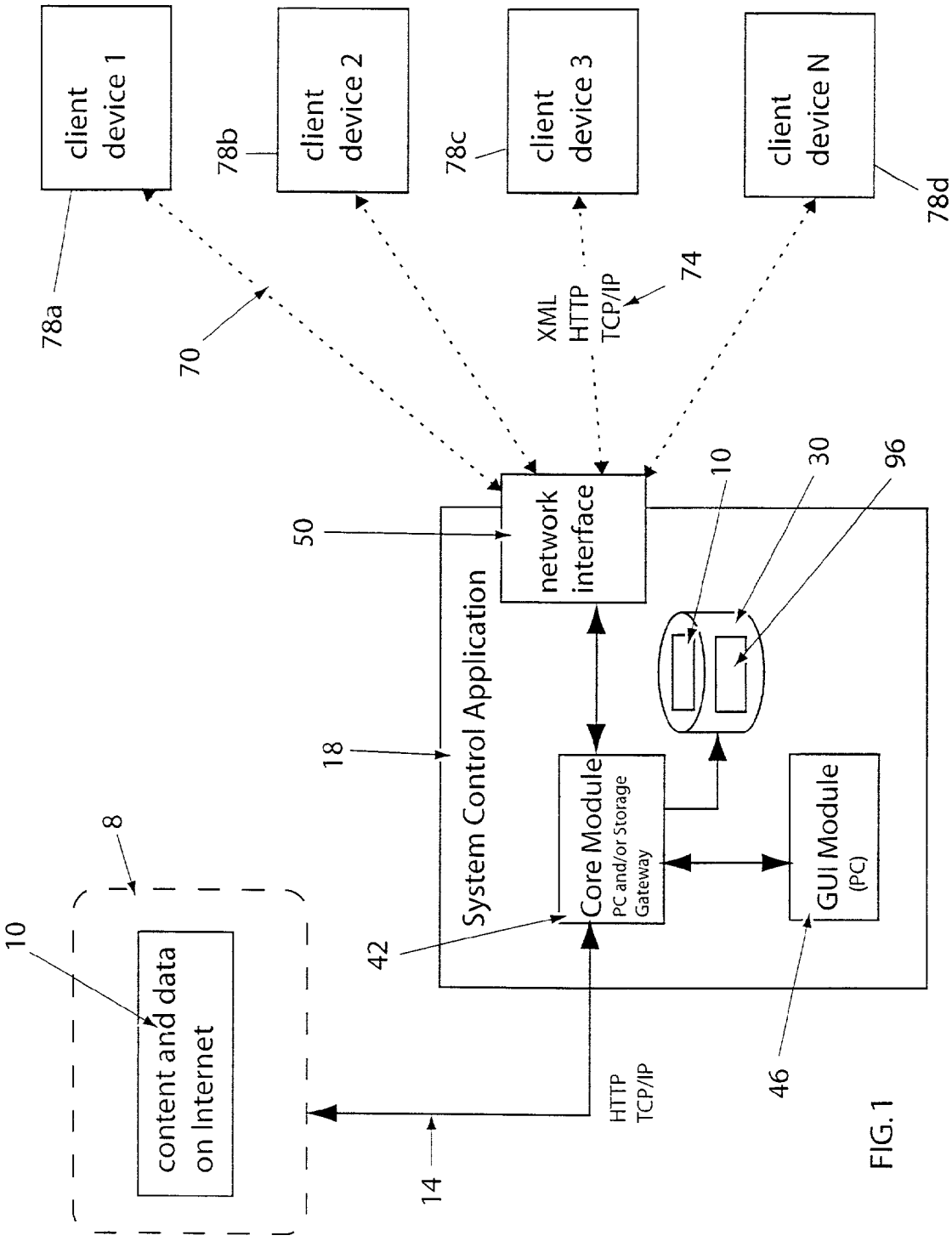
client device 1
client device 2
client device 3
client device N
78a
78b
78c
78d
70
XML
HTTP
TCP/IP
74
50
network interface
10
30
96
18
System Control Application
Core Module
PC and/or Storage Gateway
GUI Module
(PC)
42
46
8
10
content and data on Internet
14
HTTP
TCP/IP

FIG. 1

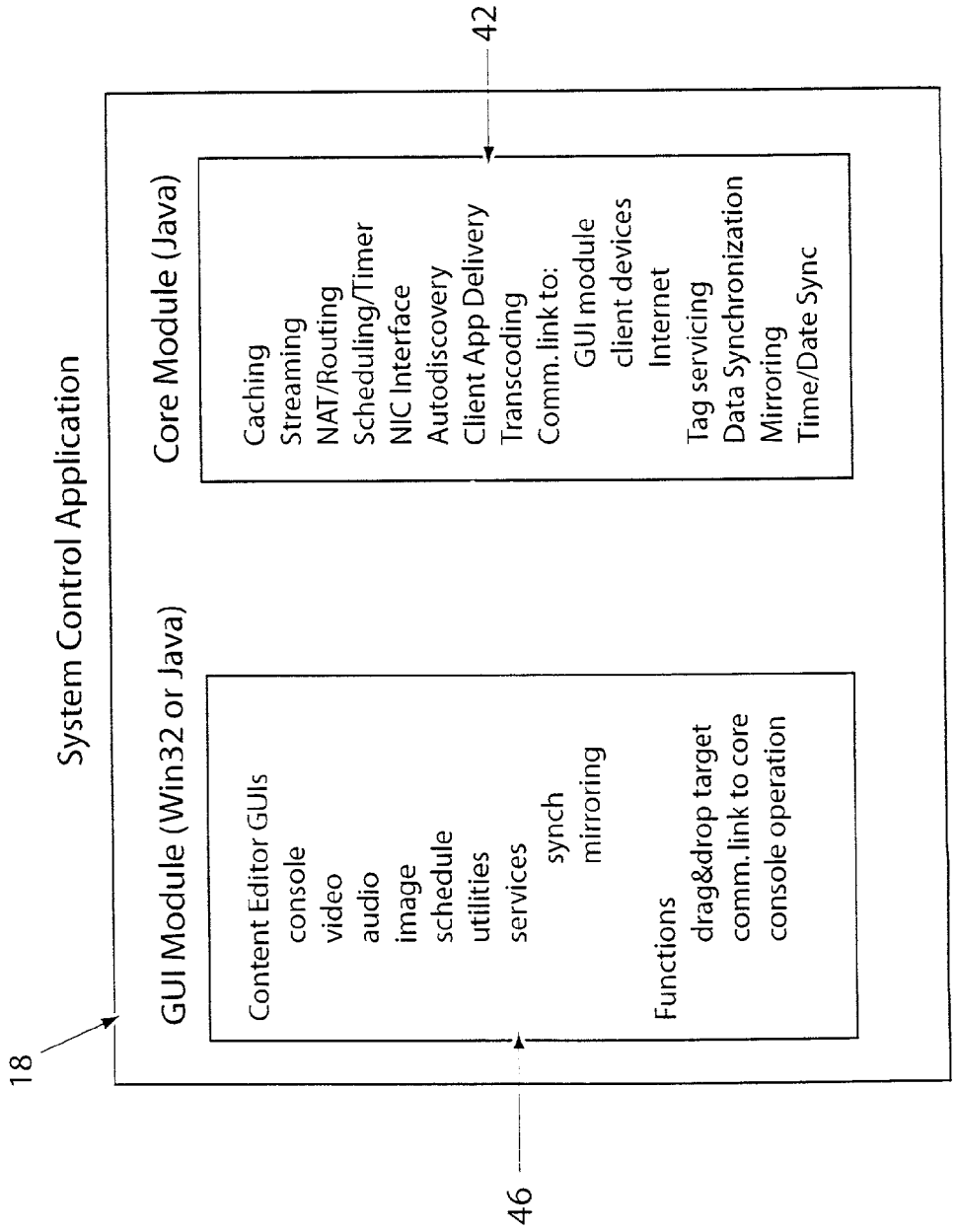
18
System Control Application
GUI Module (Win32 or Java)
Content Editor GUIs
console
video
audio
image
schedule
utilities
services
synch
mirroring
Functions
drag&drop target
comm. link to core
console operation
46
Core Module (Java)
Caching
Streaming
NAT/Routing
Scheduling/Timer
NIC Interface
Autodiscovery
Client App Delivery
Transcoding
Comm. link to:
GUI module
client devices
Internet
Tag servicing
Data Synchronization
Mirroring
Time/Date Sync
42

FIG. 2

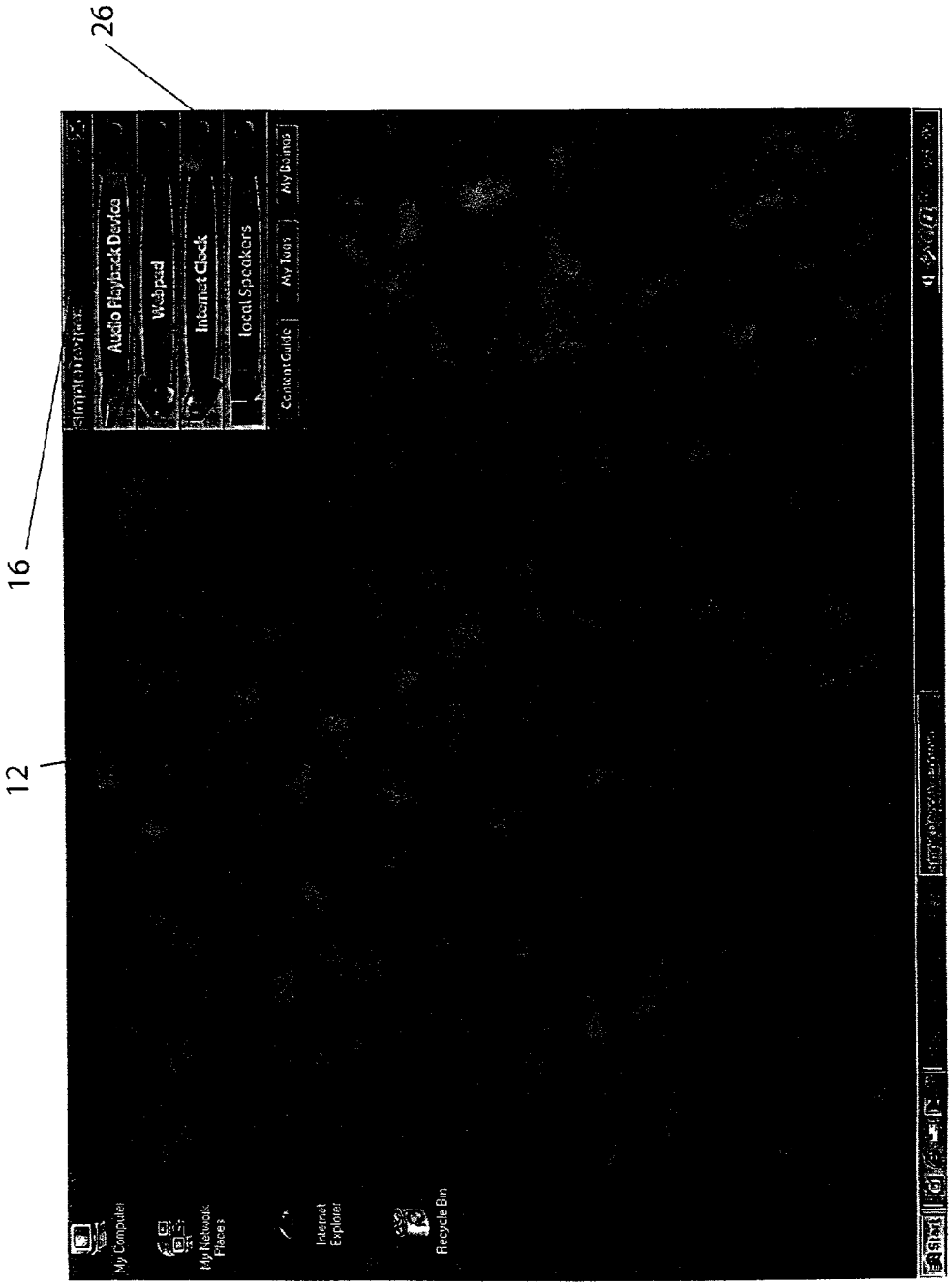
26
16
12
Audio Playback Device
Webpad
Internet Clock
local Speakers
Content Guide
My Tues
My Boinas
My Computer
My Network Places
Internet Explorer
Recycle Bin

FIG. 3

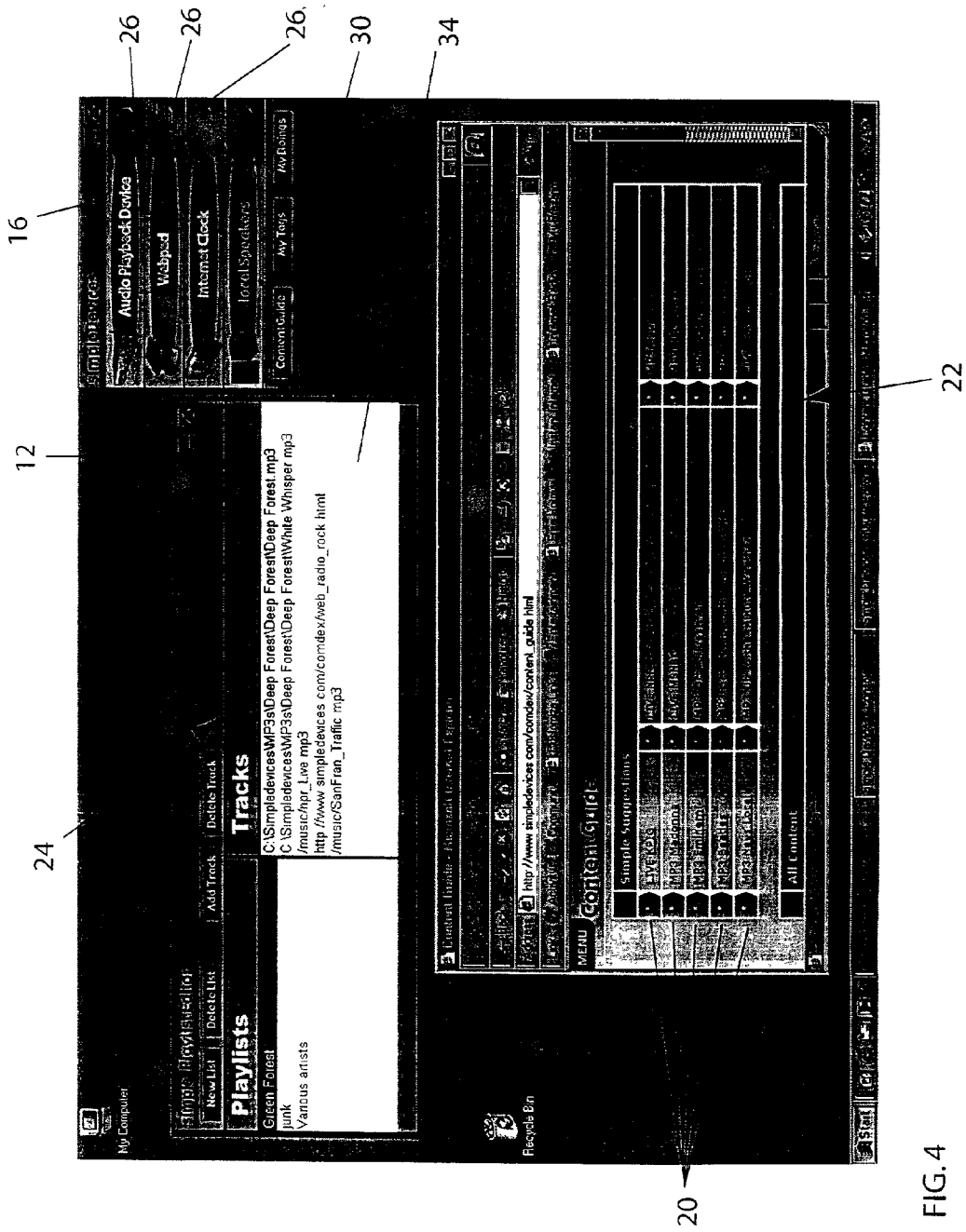
16
12
24
26
26
26
30
34
22
20
Audio Playback Device
Webpad
Internet Clock
Playlists
Tracks
Green Forest
junk
Various artists
Content Guide
Simple Suggestions
All Content

FIG. 4

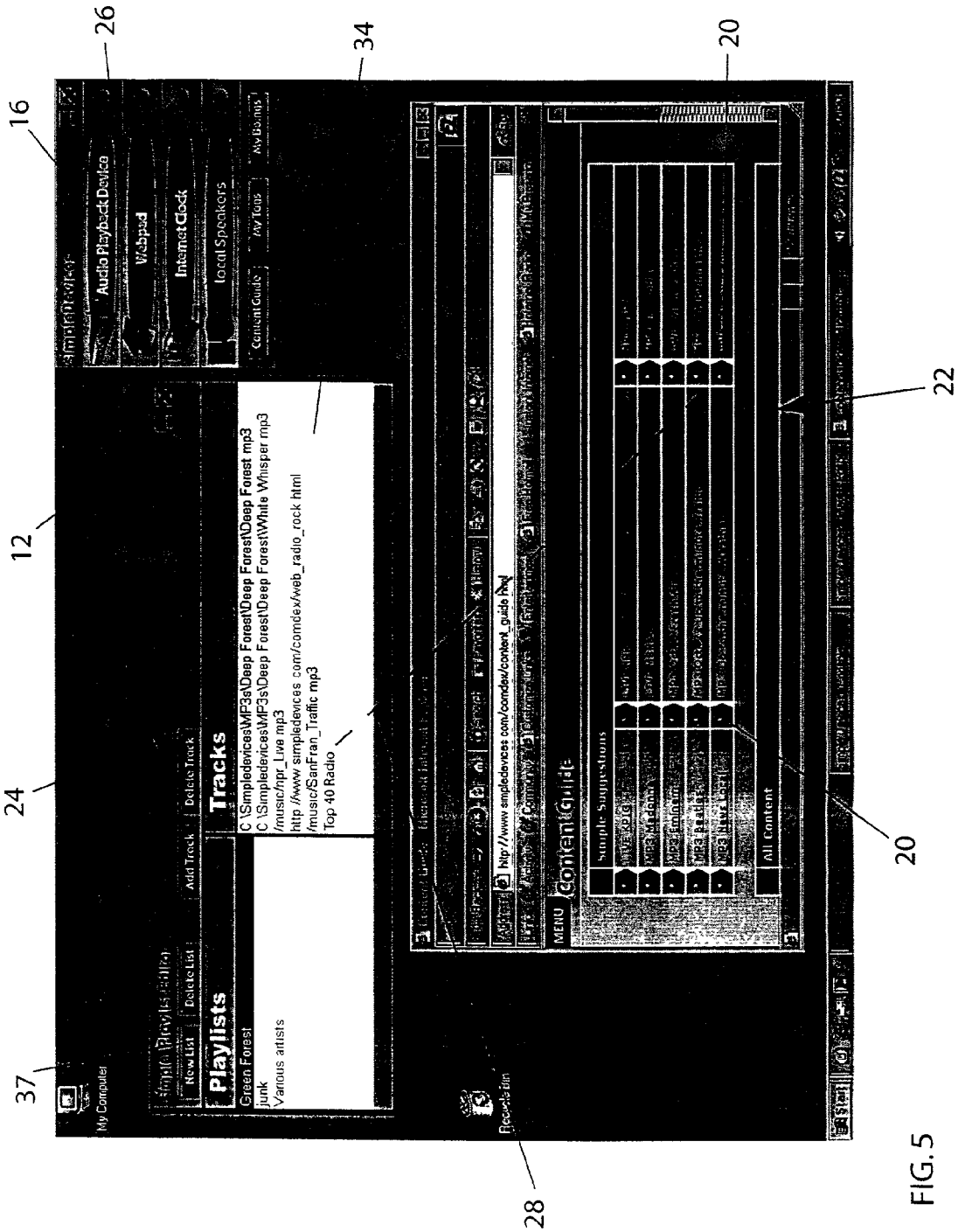
16
26
34
20
12
24
37
22
20
28
Audio Playback Device
Webpad
Internet Clock
Local Speakers
Content Guide
My Tops
My Computer
New List
Delete List
Add Track
Delete Track
Playlists
Tracks
Green Forest
junk
Various artists
C:\SimpleDevices\MP3s\Deep Forest\Deep Forest\Deep Forest.mp3
C:\SimpleDevices\MP3s\Deep Forest\Deep Forest\White Whisper.mp3
/music/npr_Live.mp3
http://www.simpledevices.com/comdev/web_radio_rock.html
/music/SanFran_Traffic.mp3
Top 40 Radio
Recycle Bin
MENU
Content Guide
Simple Suggestions
All Content

FIG. 5

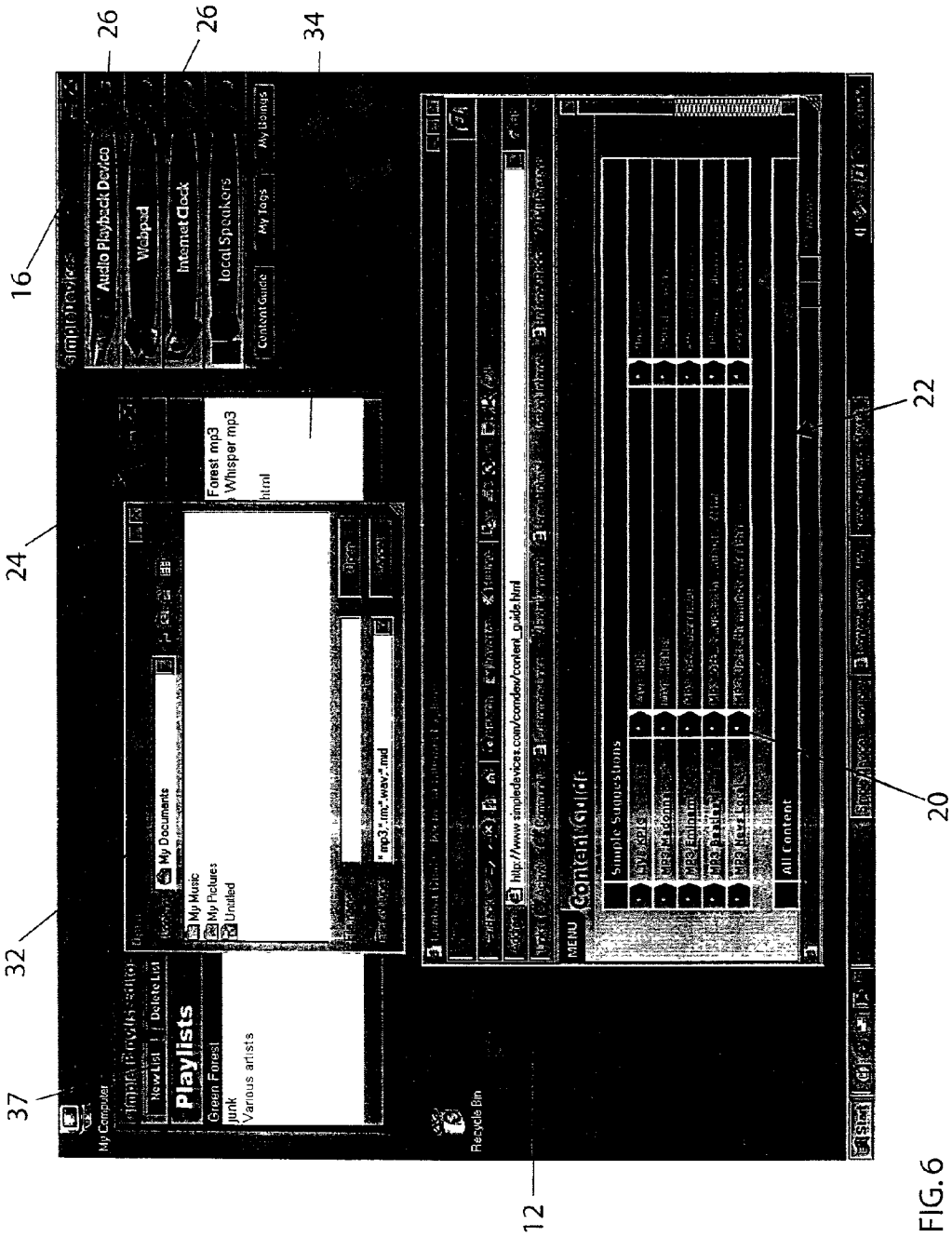
16
26
26
34
24
32
37
12
22
20
Audio Playback Device
Webpad
Internet Clock
local Speakers
Content Guide
My Tags
My Playlists
Playlists
New List
Delete List
Green Forest
junk
Various artists
My Documents
My Music
My Pictures
Untitled
Forest mp3
Whisper mp3
html
My Computer
Recycle Bin
MENU
Content Guide
Sample Suggestions
All Content
http://www.simpledevices.com/condev/content_guide.html

FIG. 6

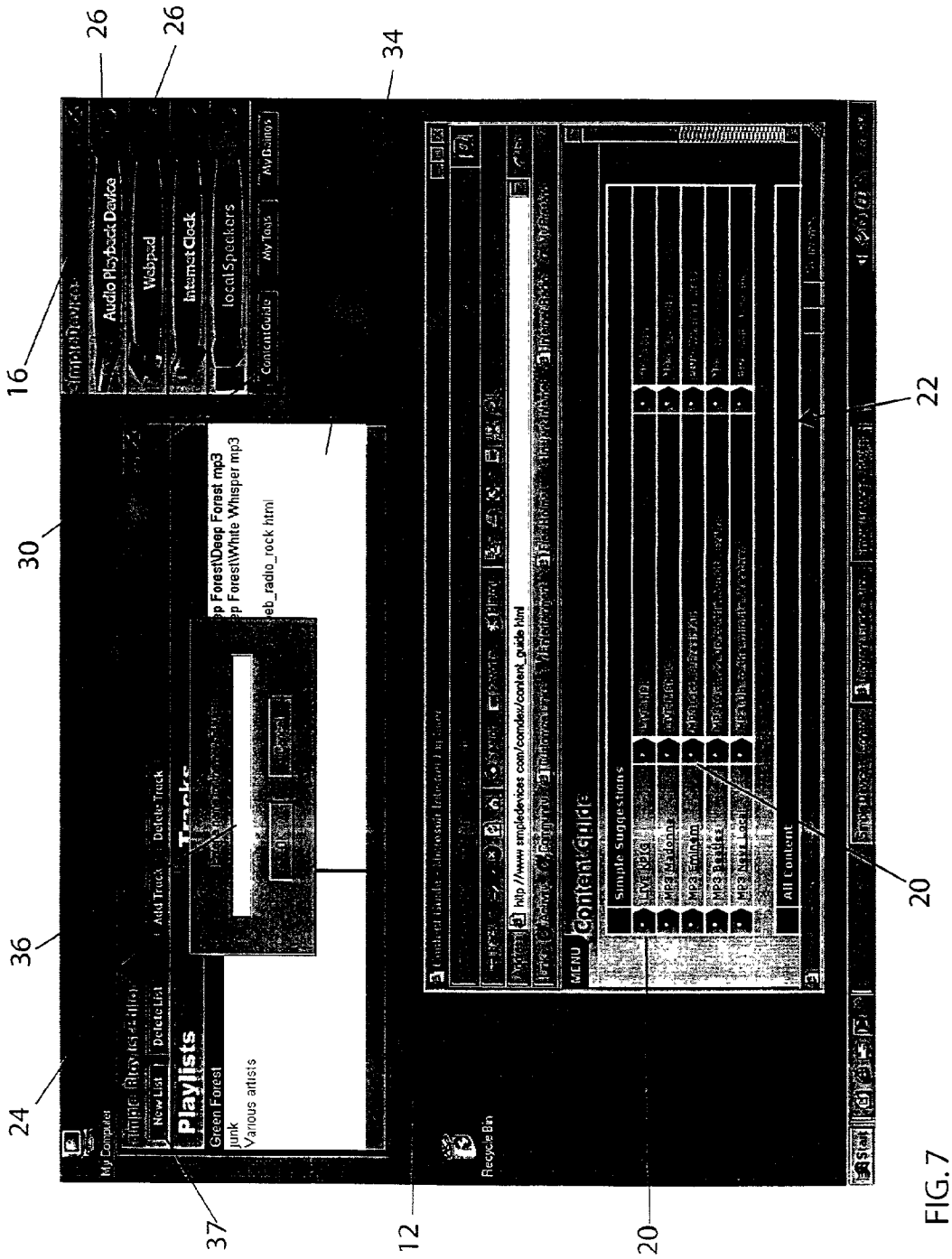
26
26
34
16
30
36
24
37
12
20
20
22
Audio Playback Device
Webpad
Internet Clock
localSpeakers
Playlists
Green Forest
junk
Various artists
Tracks
Content Guide
Simple Suggestions
All Content
Recycle Bin
My Computer

FIG. 7

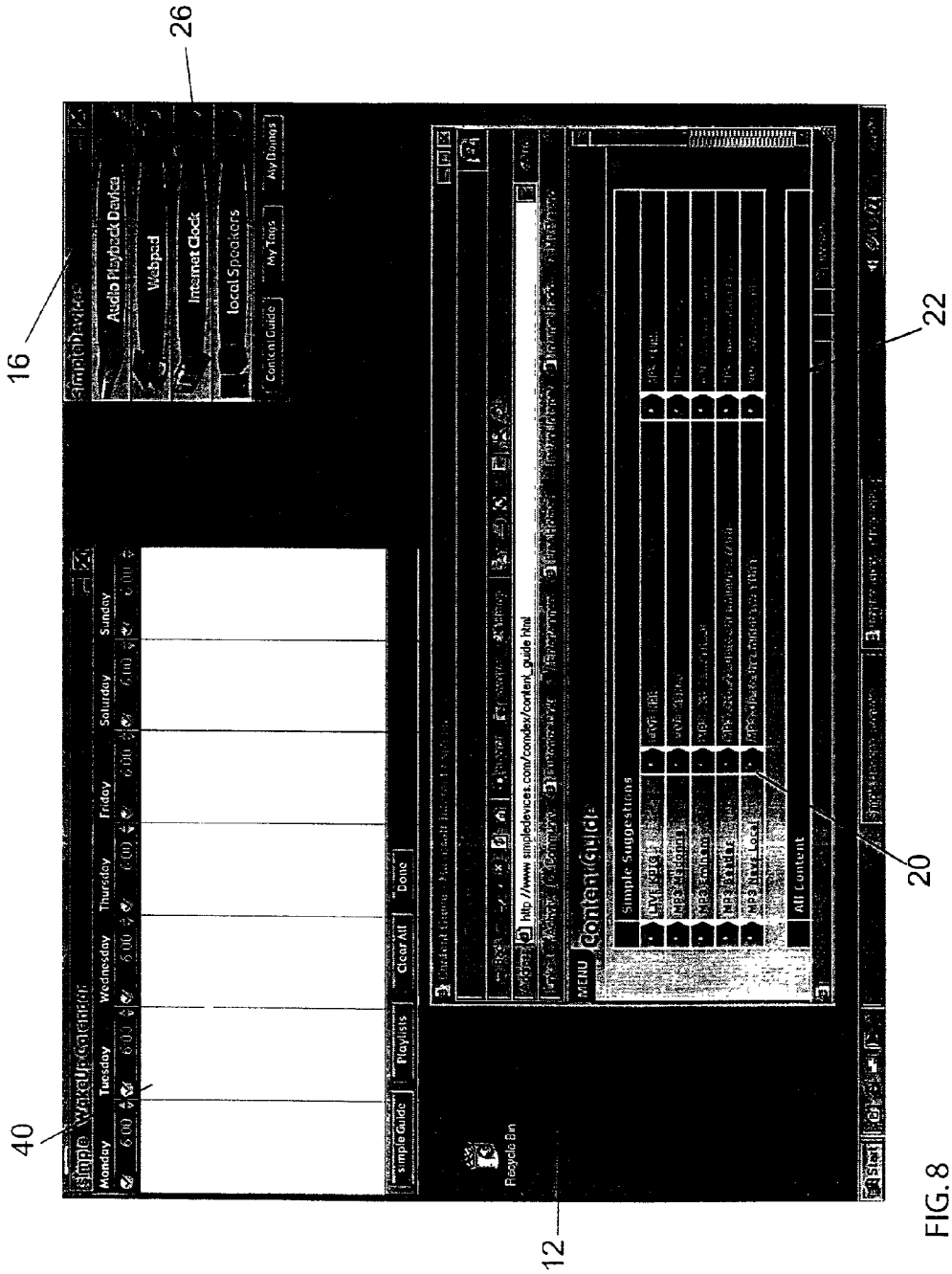
26
16
40
12
20
22
Audio Playback Device
Webpad
Internet Clock
local Speakers
Content Guide
My Tags
My Boings
Monday
Tuesday
Wednesday
Thursday
Friday
Saturday
Sunday
Playlists
Clear All
Done
Recycle Bin
MENU
Content Guide
Simple Suggestions
All Content

FIG. 8

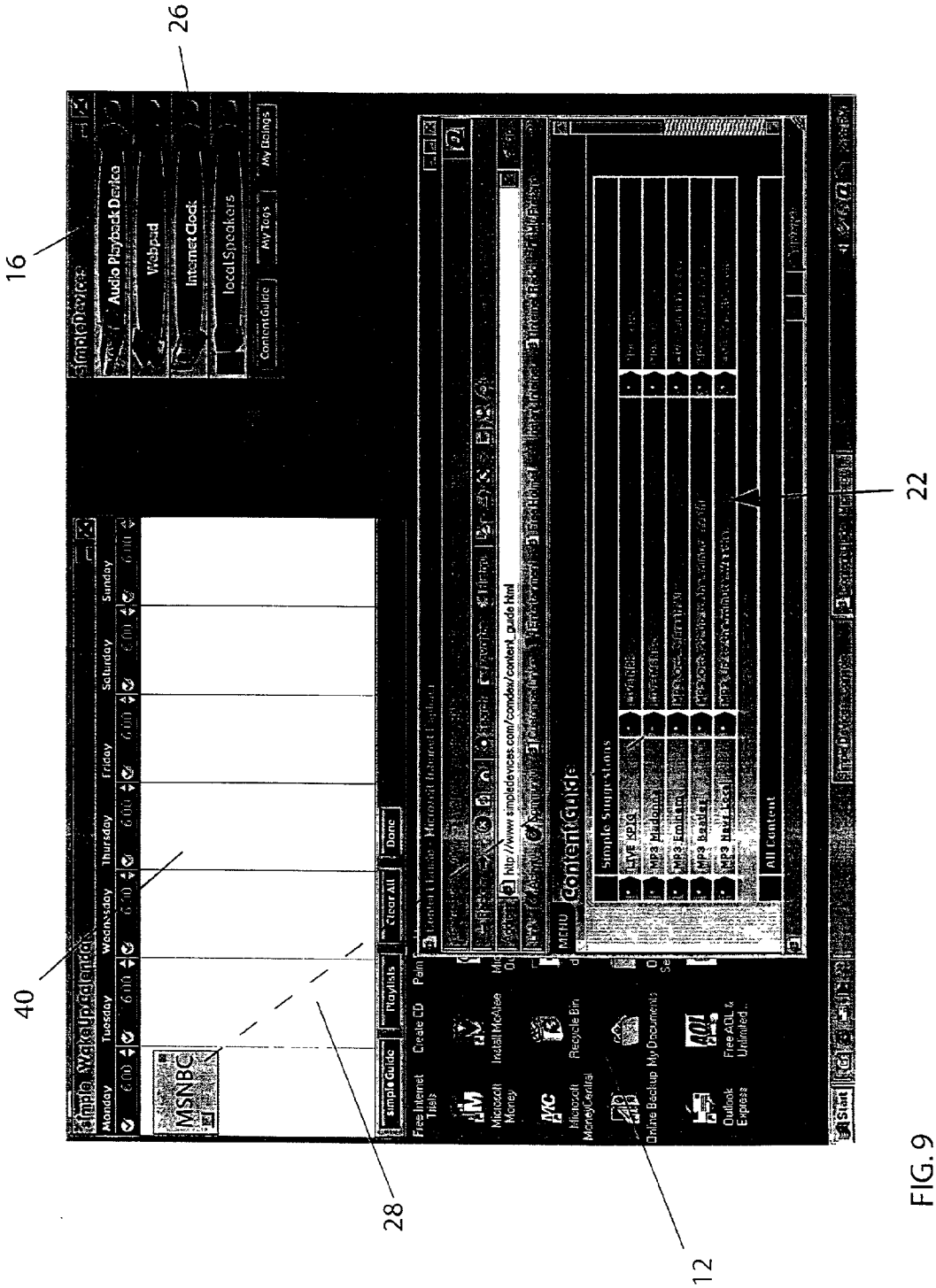
26
16
40
28
12
22
Simple Wake Up Calendar
Monday
Tuesday
Wednesday
Thursday
Friday
Saturday
Sunday
MSNBC
Audio Playback Device
Webpad
Internet Clock
local Speakers
Content Guide
My Tags
My Bookings
Simple Guide
Playlists
Clear All
Done
Free Internet Trials
Create CD
Paint
Microsoft Money
Install McAfee
Microsoft MoneyCentral
Recycle Bin
Online Backup My Documents
Outlook Express
Free AOL & Unlimited...
Content Guide
Simple Suggestions
All Content
Start

FIG. 9

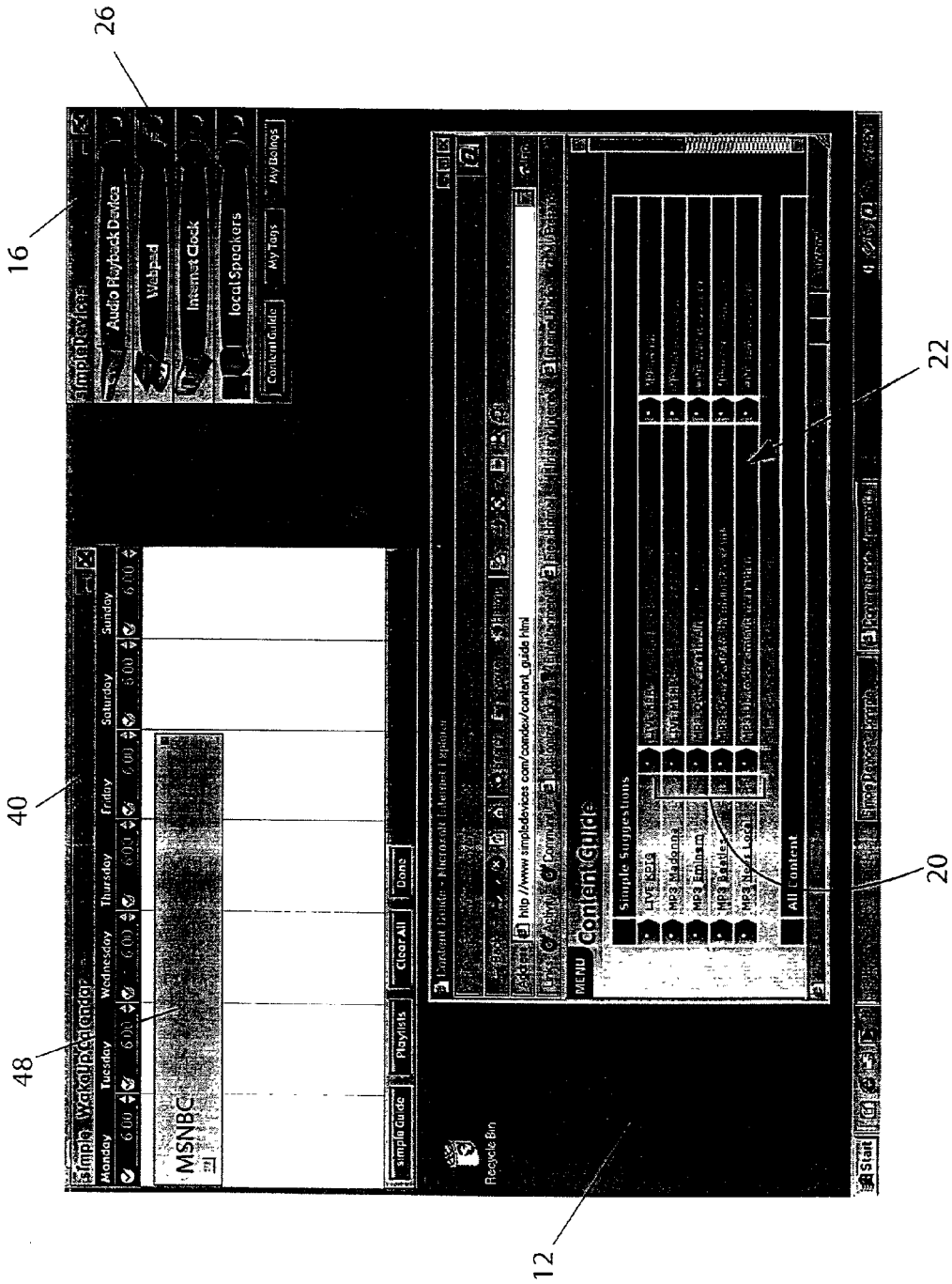
26
16
40
48
22
20
12
Simple Devices
Audio Playback Device
Webpad
Internet Clock
local Speakers
Content Guide
My Tags
My Beings
Simple Wakeup Calendar
Monday
Tuesday
Wednesday
Thursday
Friday
Saturday
Sunday
MSNBC
Playlists
Clear All
Done
Content Guide
Simple Suggestions
All Content
Recycle Bin
Start

FIG.10

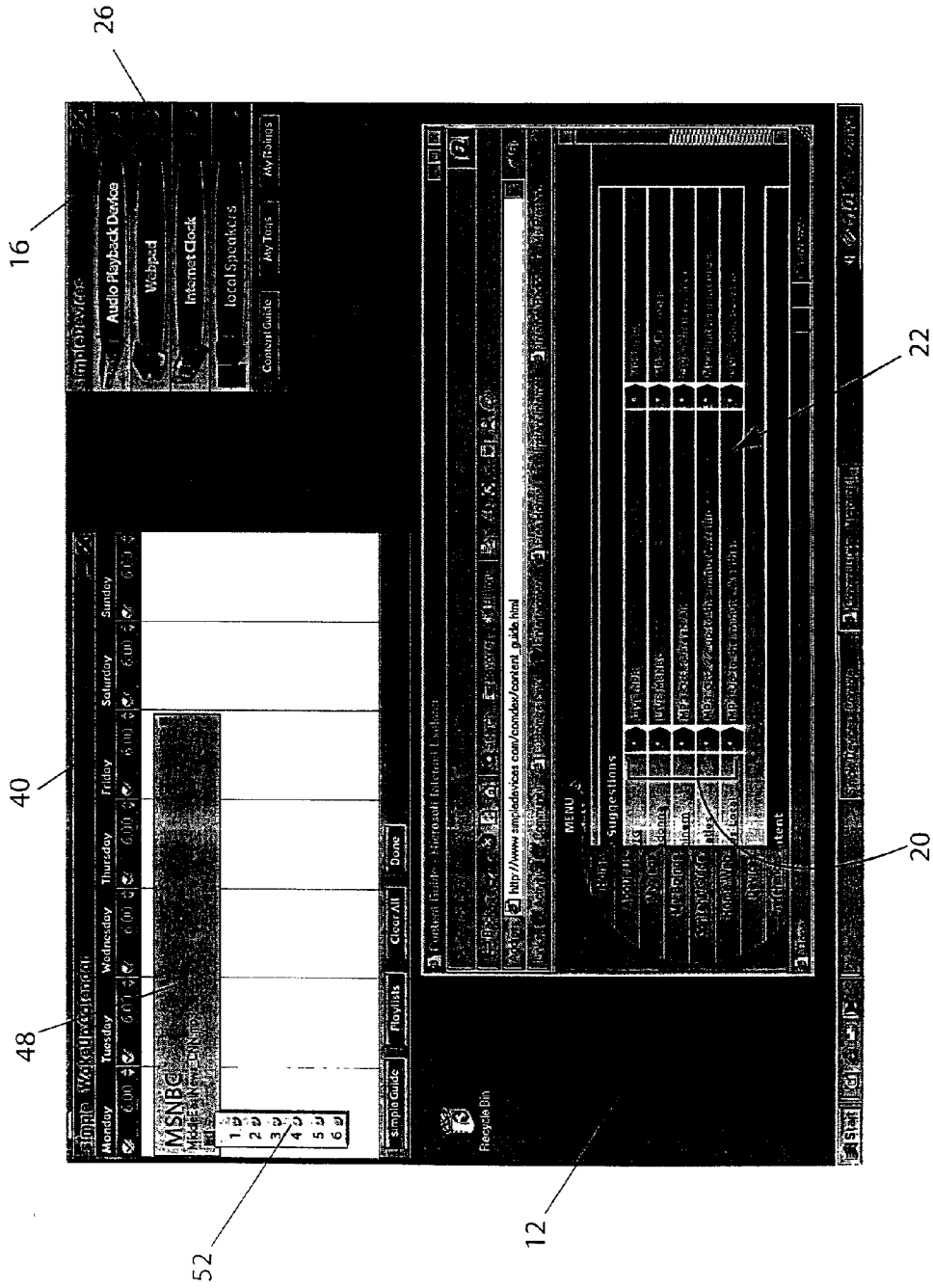
26
16
40
48
52
12
20
22
Audio Playback Device
Webpad
Internet Clock
local Speakers
Content Guide
My Tags
My Ratings
Monday
Tuesday
Wednesday
Thursday
Friday
Saturday
Sunday
MSNBC
Playlists
Clear All
Done
Suggestions
MENU
Recycle Bin

FIG.11

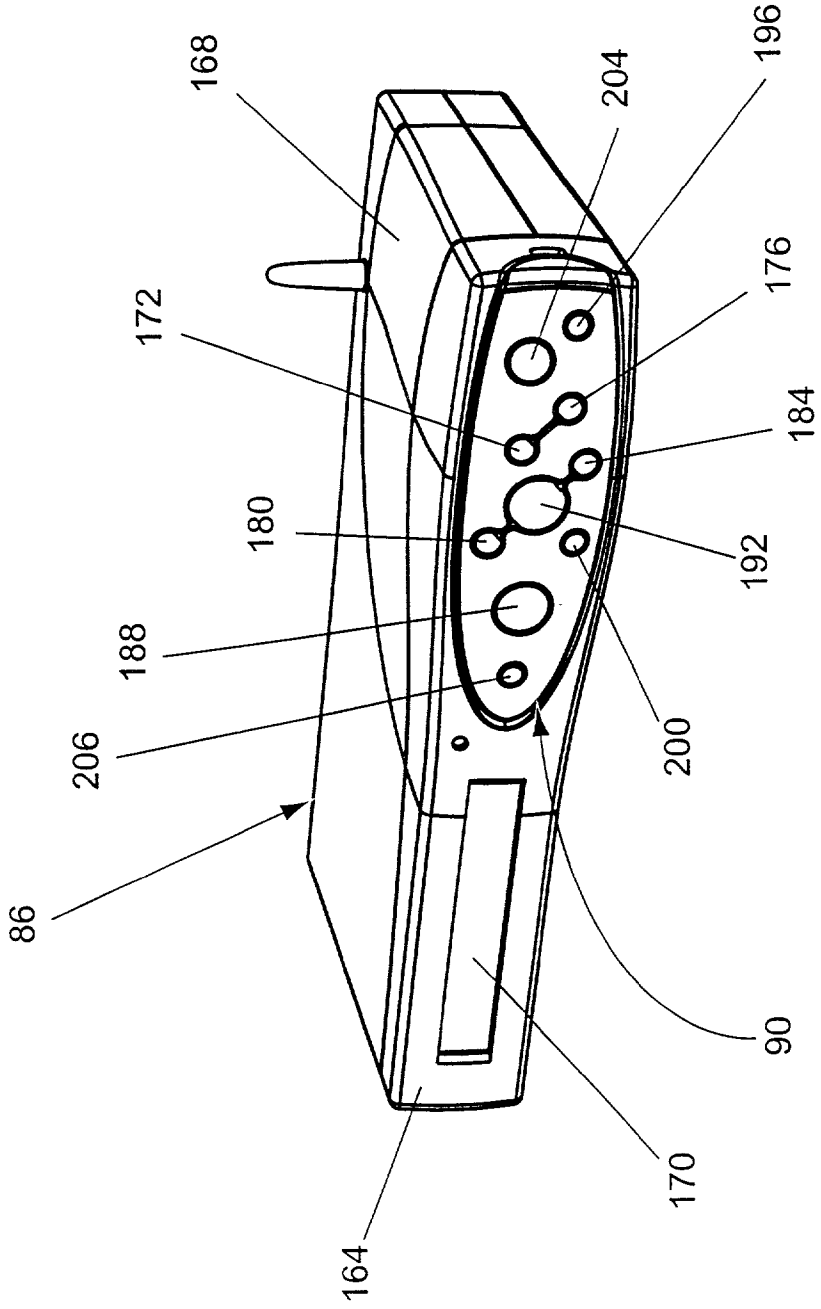

FIG. 12

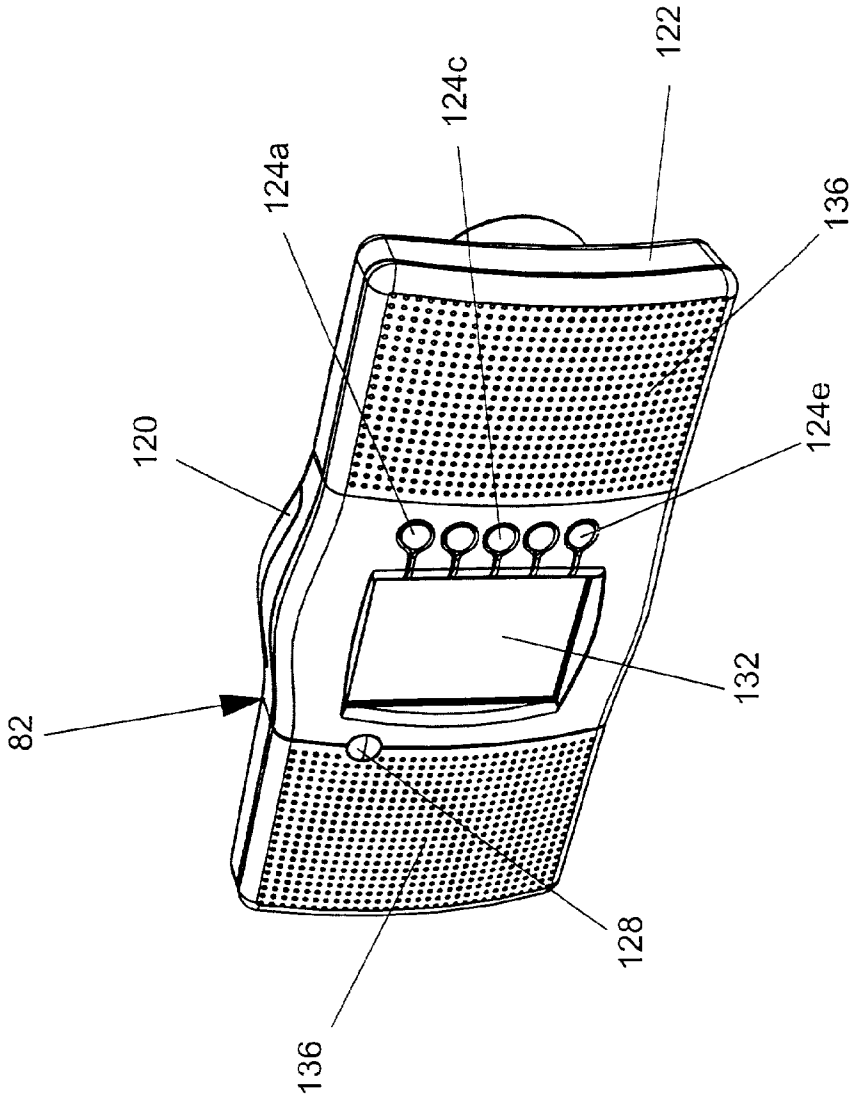

FIG. 13

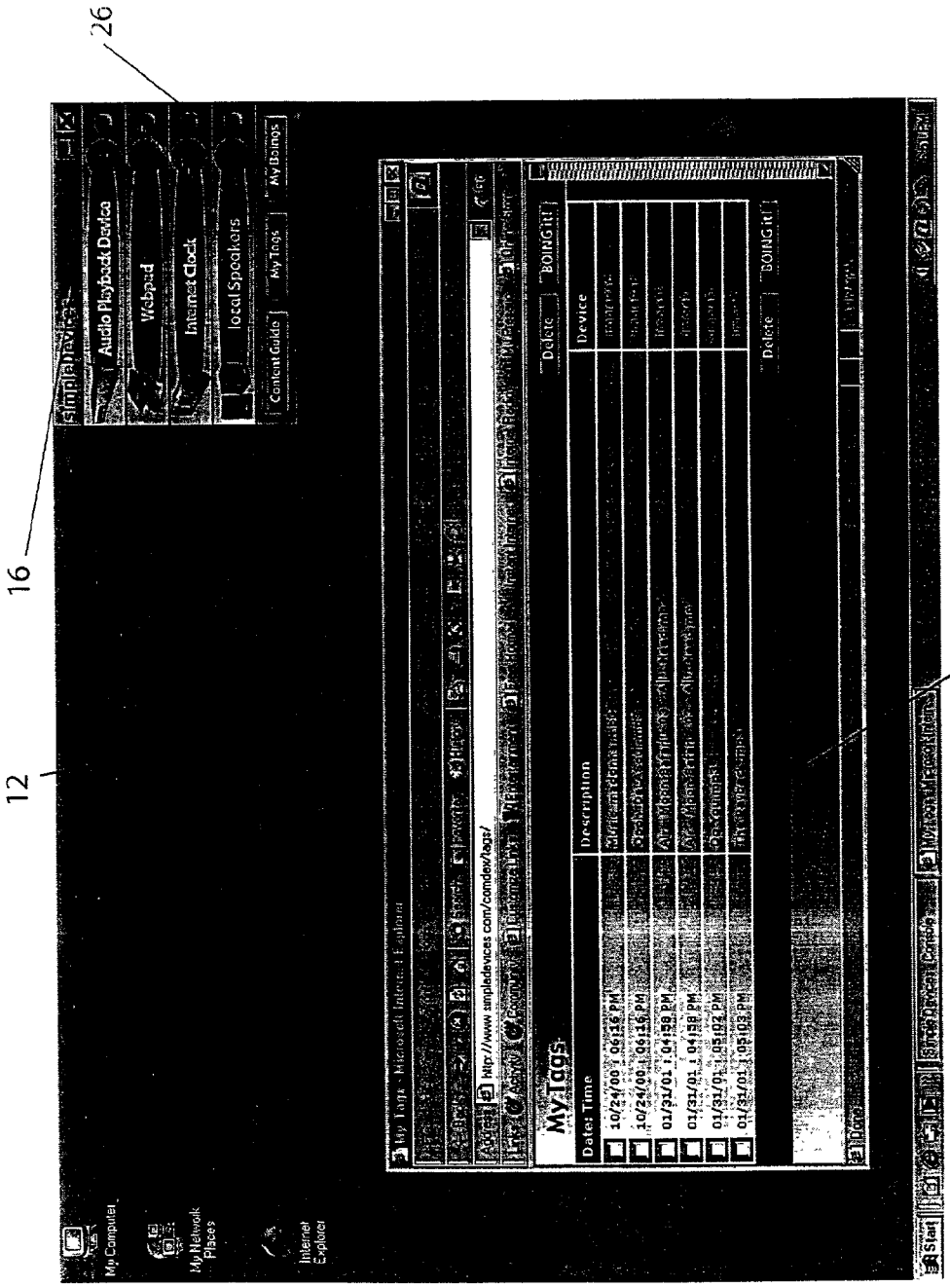
26
16
12
56
Audio Playback Device
Webpad
Internet Clock
local Speakers
Content Guide
My Tags
My Boings
My Tags
Date: Time
Description
Device
Delete
BOING it!
My Computer
My Network Places
Internet Explorer

FIG. 14

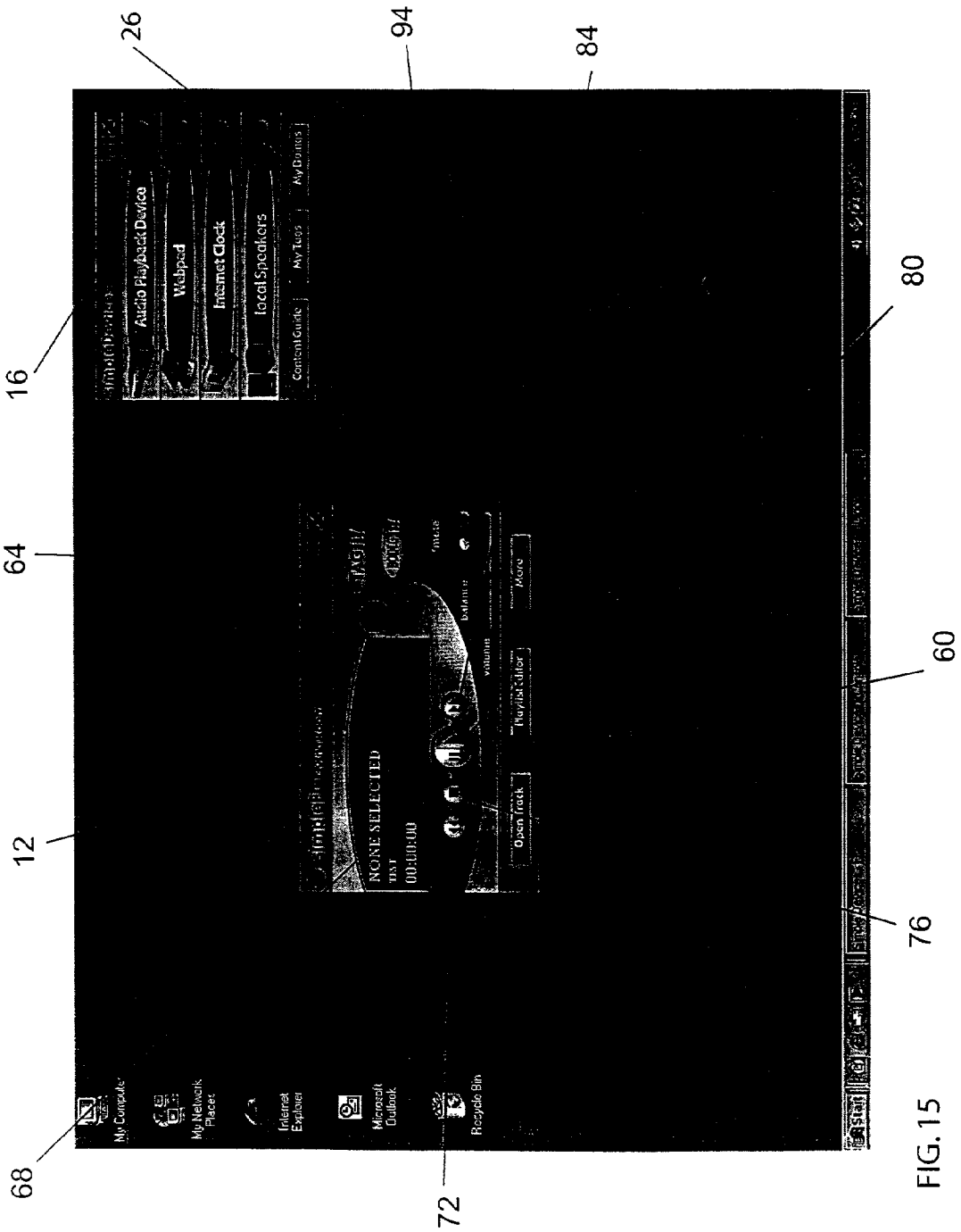
26
94
84
16
80
64
60
12
76
68
72
Audio Playback Device
Webpad
Internet Clock
Local Speakers
ContentGuide
MyTags
MyBonus
NONE SELECTED
00:00:00
Open Track
PlaylistEditor
More
My Computer
My Network Places
Internet Explorer
Microsoft Outlook
Recycle Bin

FIG. 15

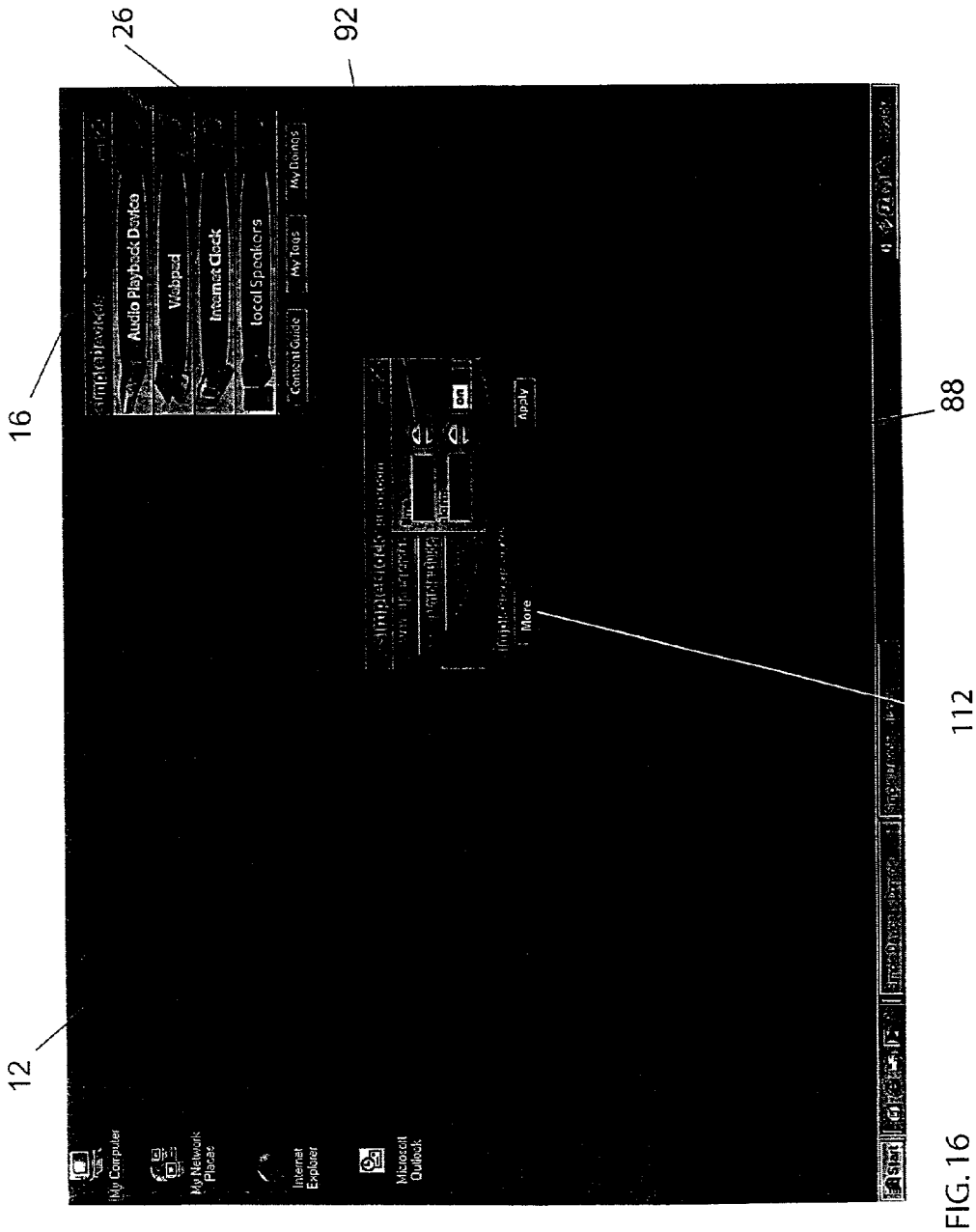
26
92
16
88
112
12
Audio Playback Device
Webpad
Internet Clock
local Speakers
Content Guide
My Tools
My Books
More
Apply
My Computer
My Network Places
Internet Explorer
Microsoft Outlook

FIG. 16

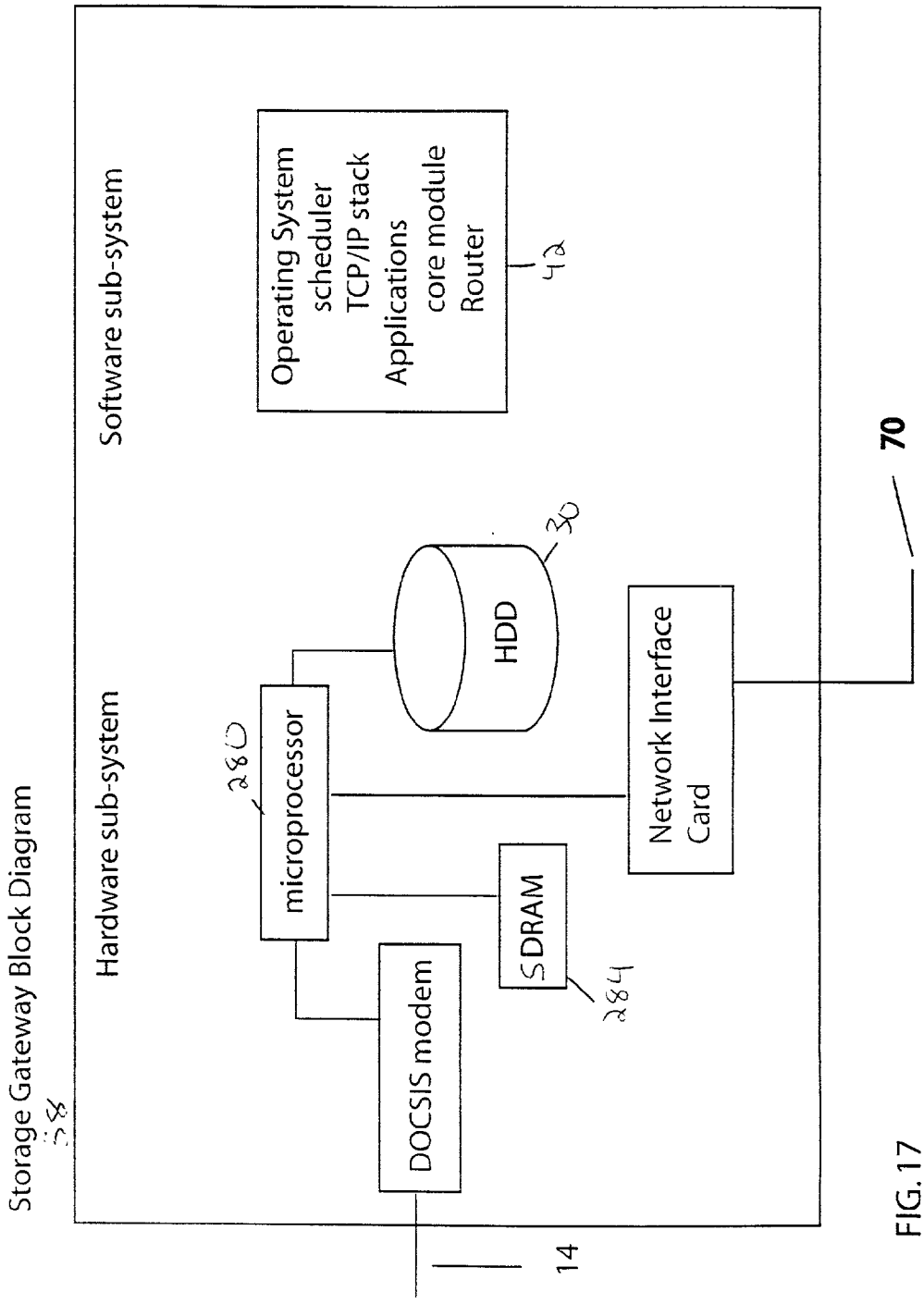
Storage Gateway Block Diagram
58
Hardware sub-system
Software sub-system
Operating System
scheduler
TCP/IP stack
Applications
core module
Router
42
HDD
30
microprocessor
280
SDRAM
284
DOCSIS modem
Network Interface
Card
70
14

FIG. 17

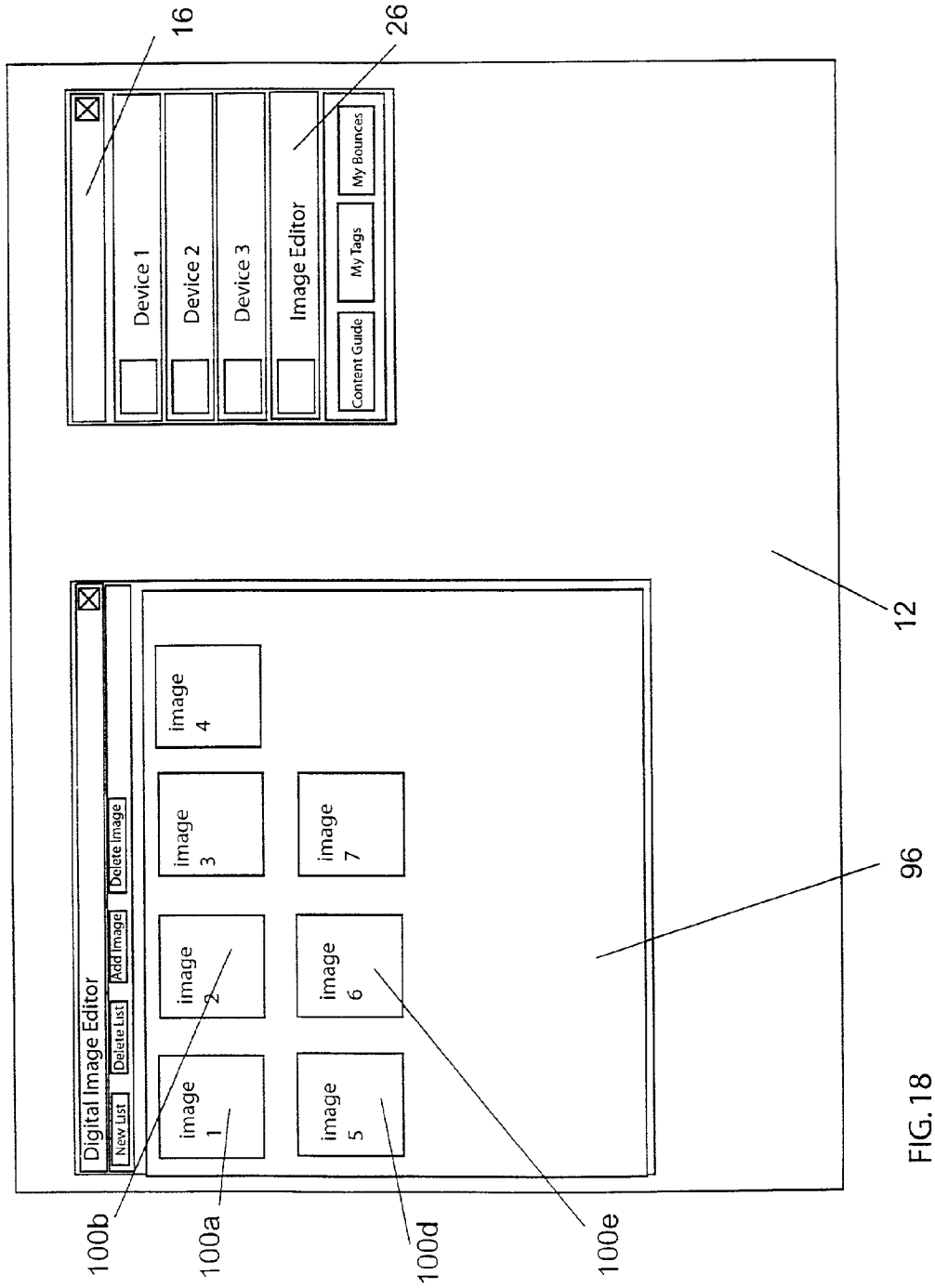
16
26
Device 1
Device 2
Device 3
Image Editor
Content Guide
My Tags
My Bounces
Digital Image Editor
New List
Delete List
Add Image
Delete image
image 1
image 2
image 3
image 4
image 5
image 6
image 7
12
96
100b
100a
100d
100e

FIG. 18

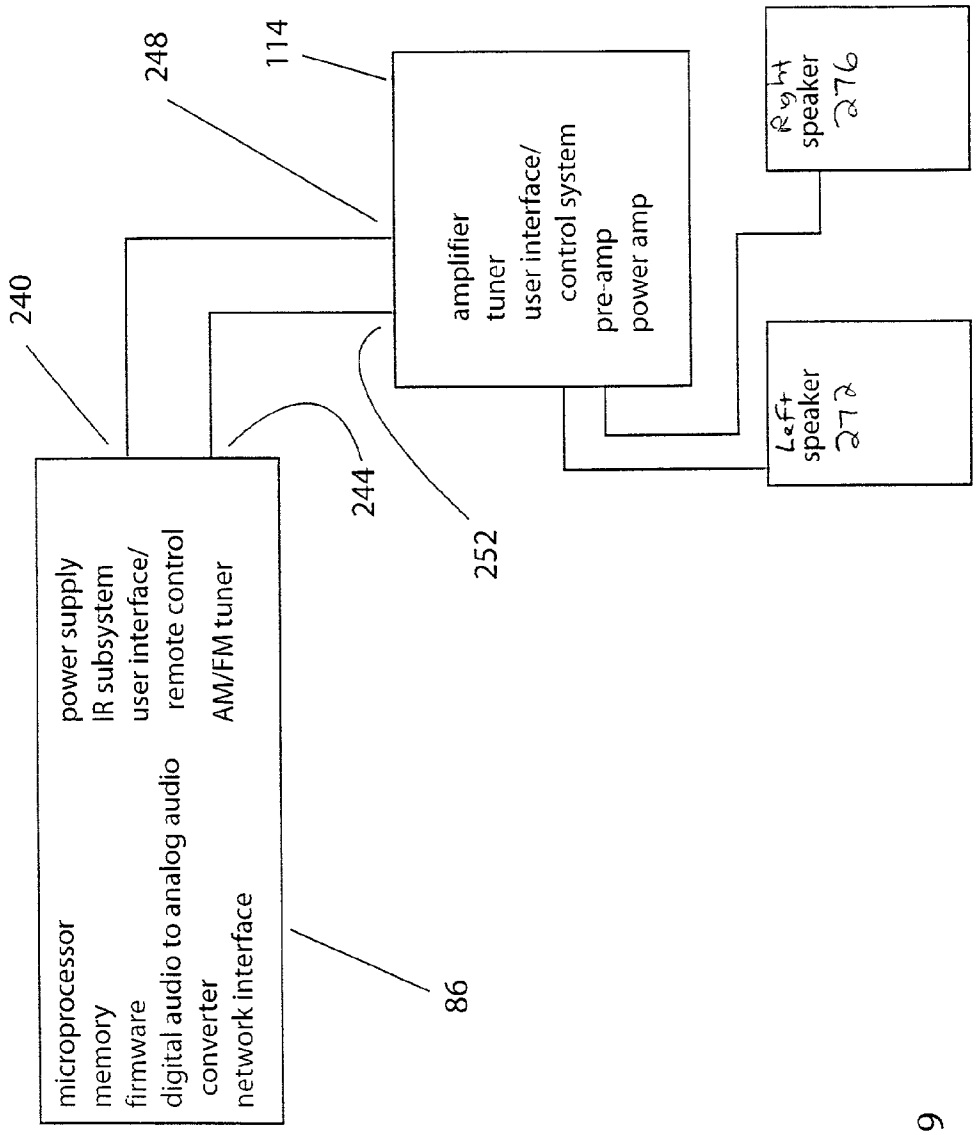
microprocessor
memory
firmware
digital audio to analog audio converter
network interface
power supply
IR subsystem
user interface/ remote control
AM/FM tuner
86
240
244
248
252
114
amplifier
tuner
user interface/ control system
pre-amp
power amp
Left speaker 272
Right speaker 276

FIG. 19

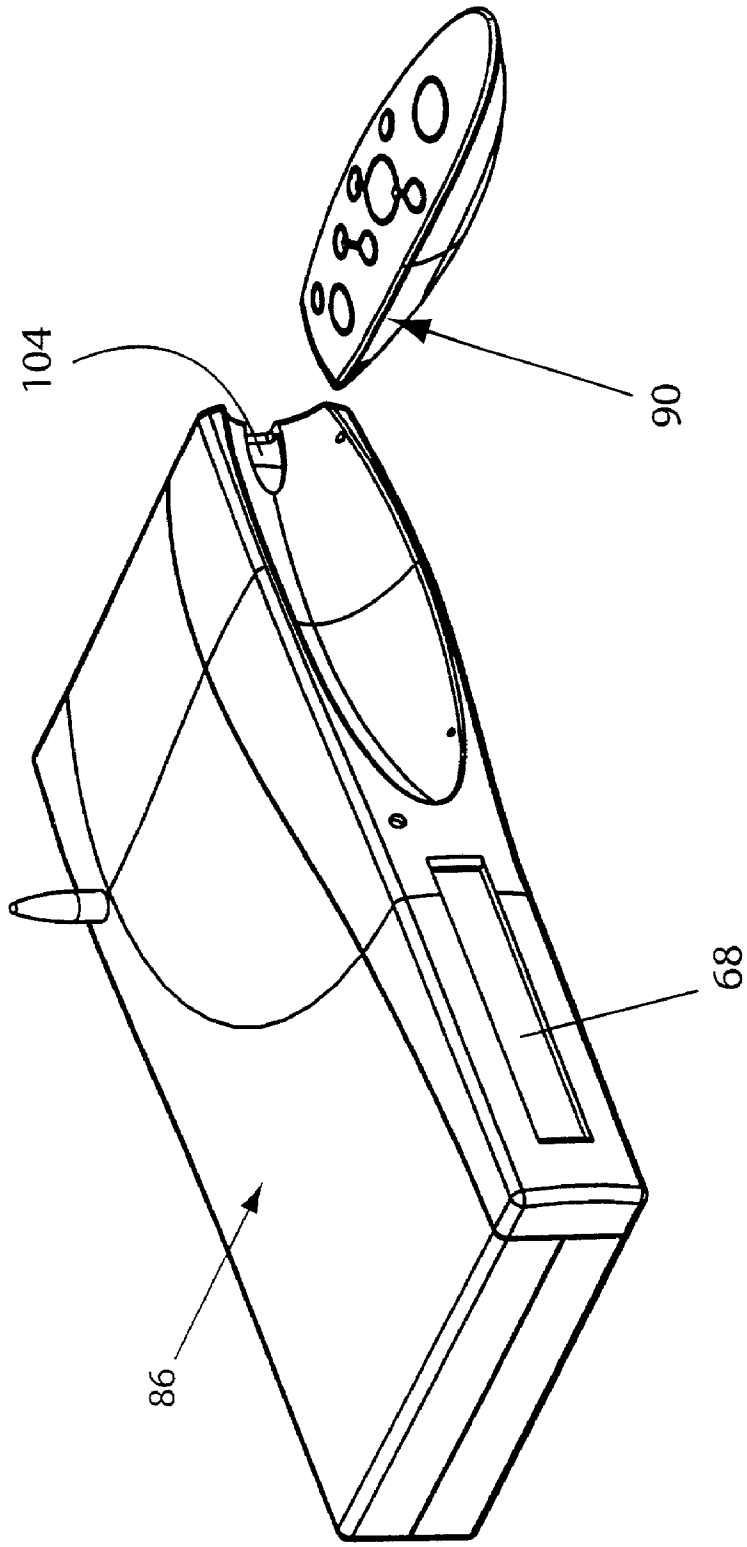

FIG. 20

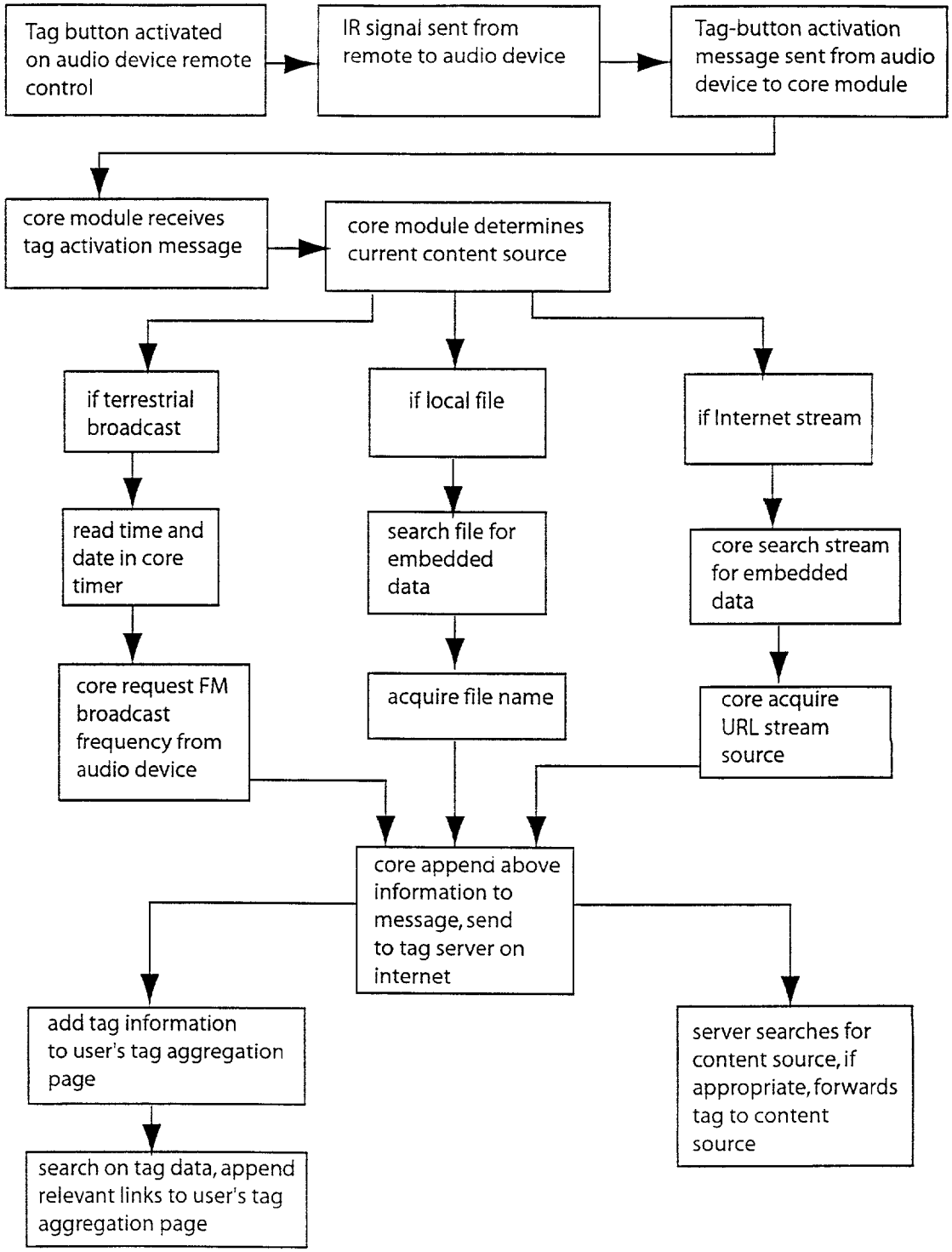
Tag button activated on audio device remote control
IR signal sent from remote to audio device
Tag-button activation message sent from audio device to core module
core module receives tag activation message
core module determines current content source
if terrestrial broadcast
if local file
if Internet stream
read time and date in core timer
search file for embedded data
core search stream for embedded data
core request FM broadcast frequency from audio device
acquire file name
core acquire URL stream source
core append above information to message, send to tag server on internet
add tag information to user's tag aggregation page
server searches for content source, if appropriate, forwards tag to content source
search on tag data, append relevant links to user's tag aggregation page

FIG. 21

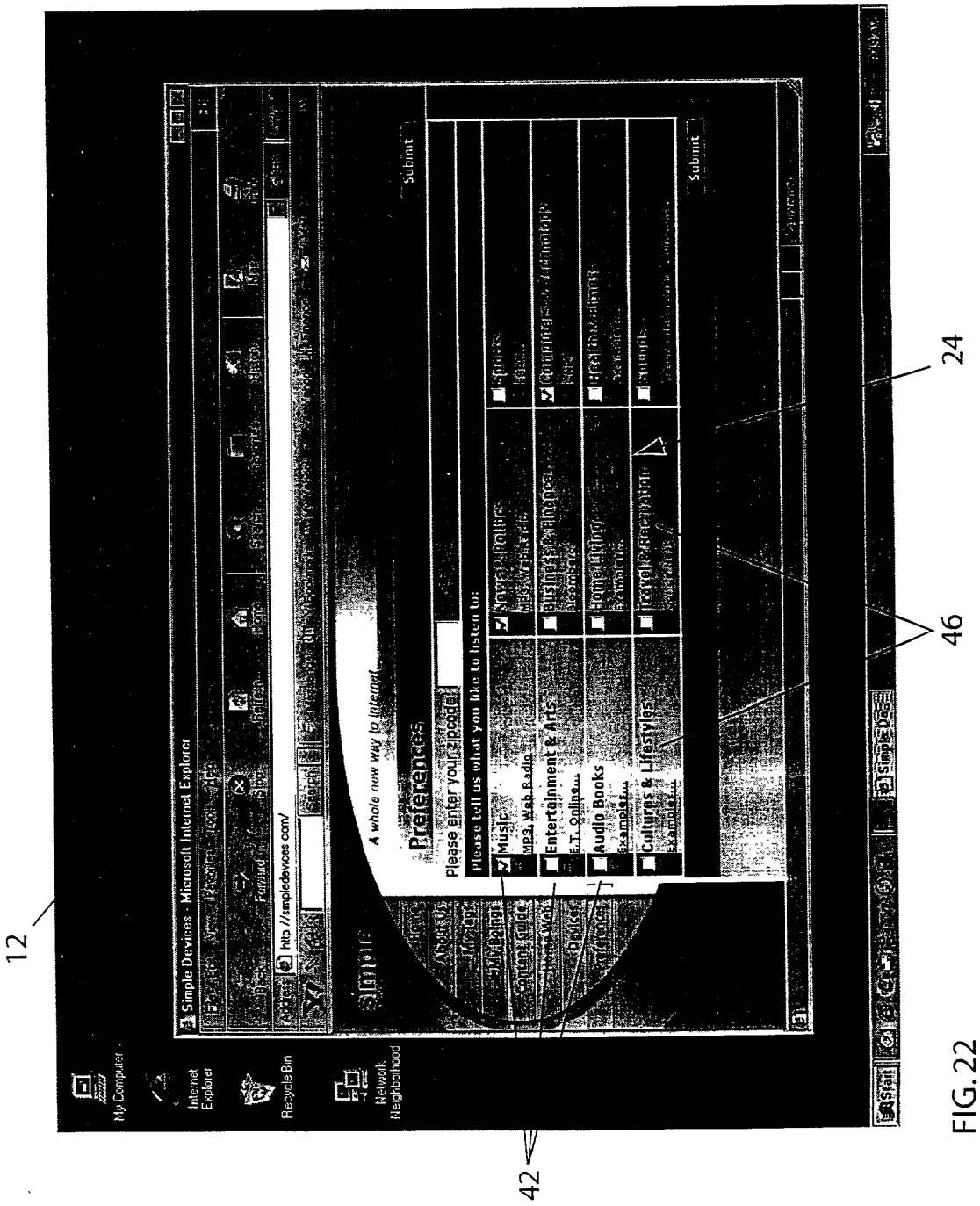
12
24
46
42
Simple Devices - Microsoft Internet Explorer
http://simpledevices.com/
A whole new way to Internet
Preferences
Please enter your zipcode
Please tell us what you like to listen to:
Music
Entertainment & Arts
Audio Books
Submit
My Computer
Internet Explorer
Recycle Bin
Network Neighborhood

FIG. 22

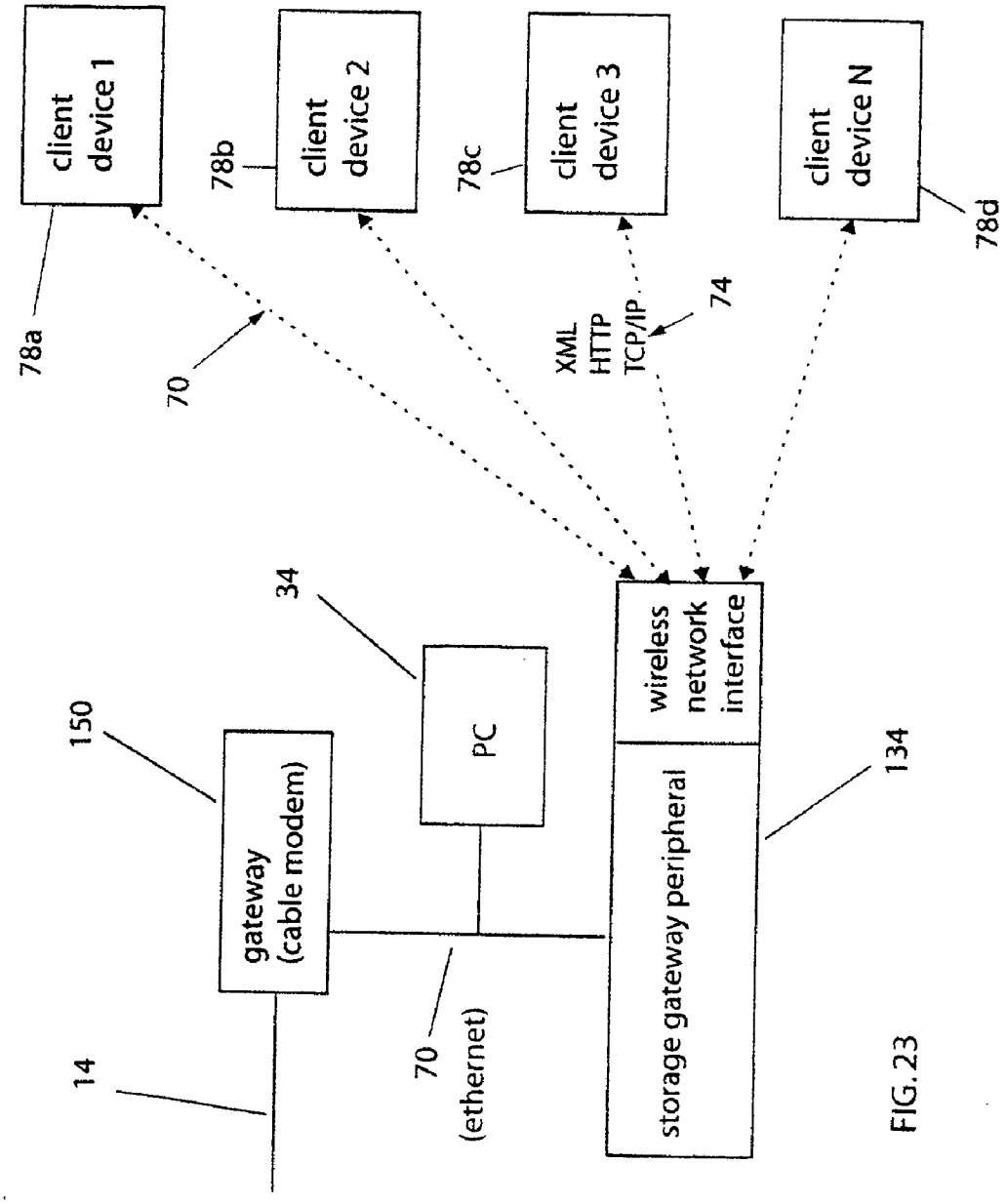
client device 1
78a
70
client device 2
78b
client device 3
78c
XML
HTTP
TCP/IP
74
client device N
78d
34
PC
150
gateway (cable modem)
14
70
(ethernet)
wireless network interface
storage gateway peripheral
134

FIG. 23

Home PC Information Appliance Server Setup Flow Chart

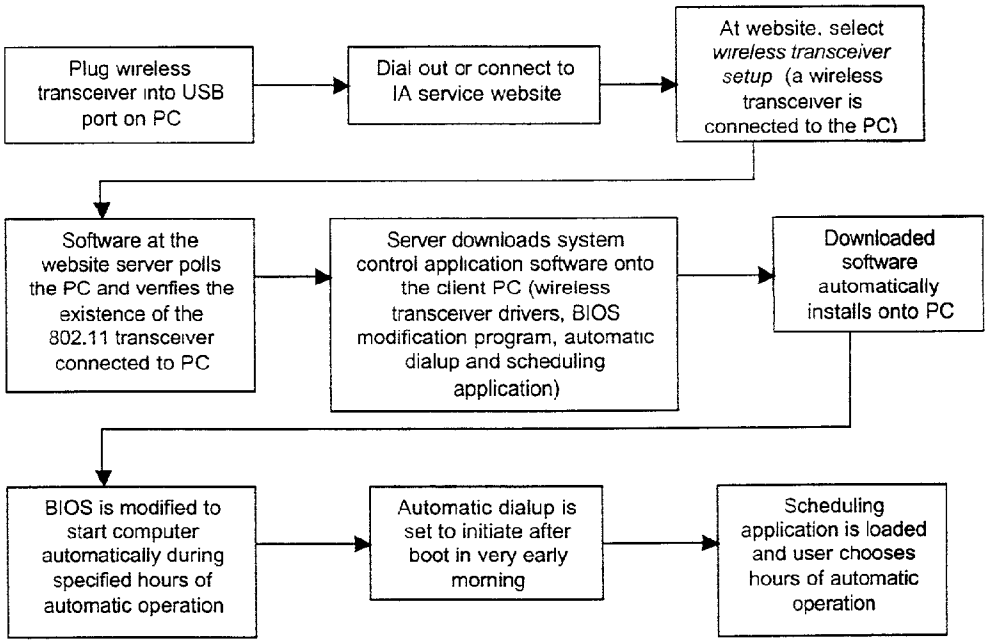

FIG. 24

Client Device Content Selection Interface

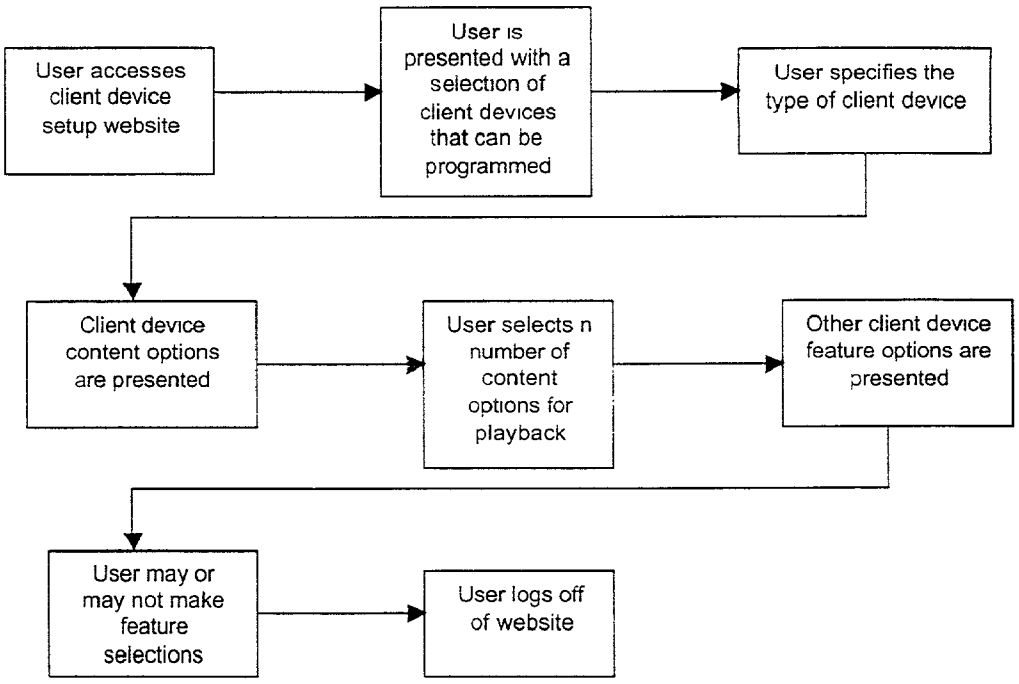

FIG. 25

Home PC Storage Server Operation Sequence

Overnight Connection and Caching Example

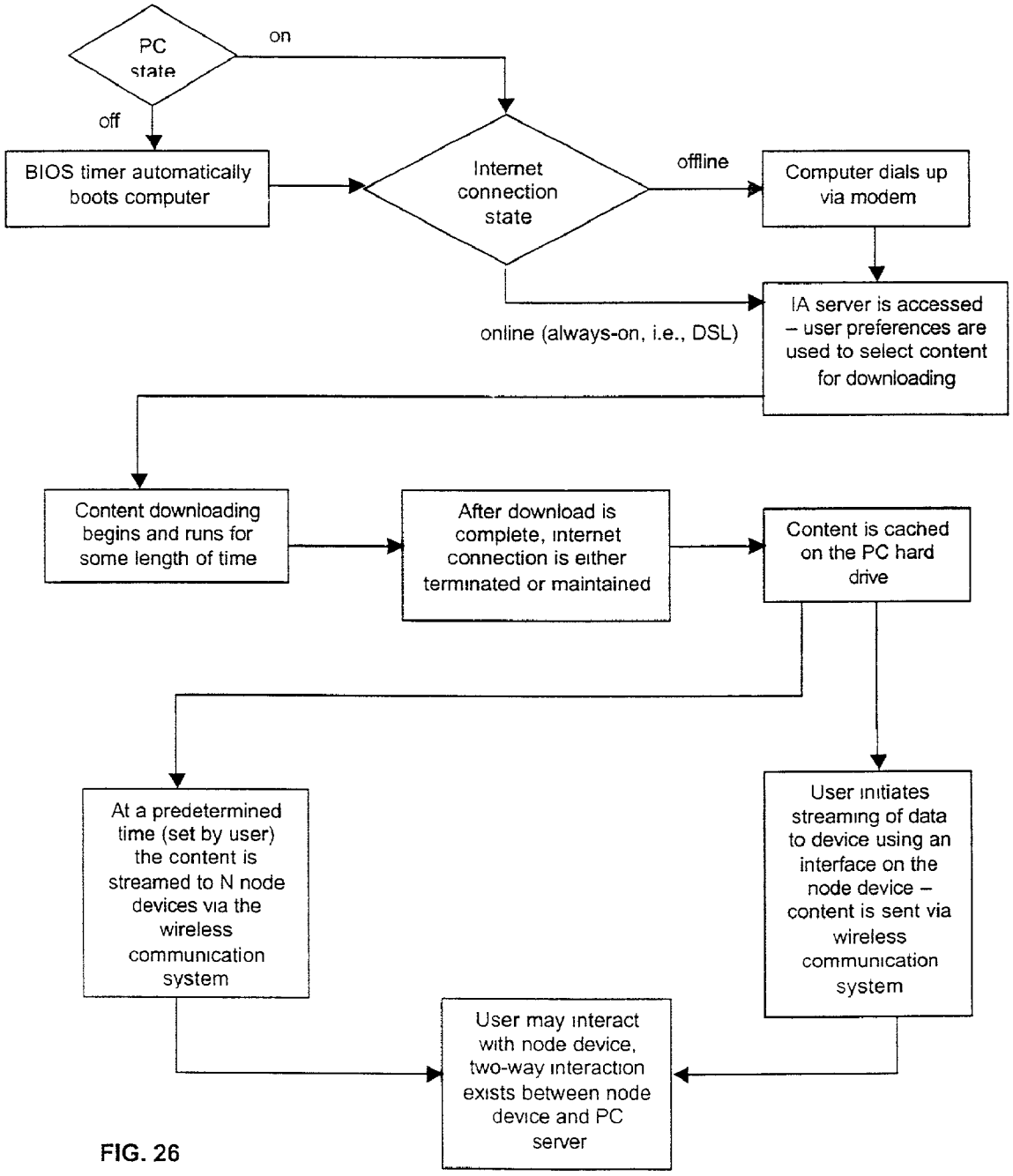

FIG. 26

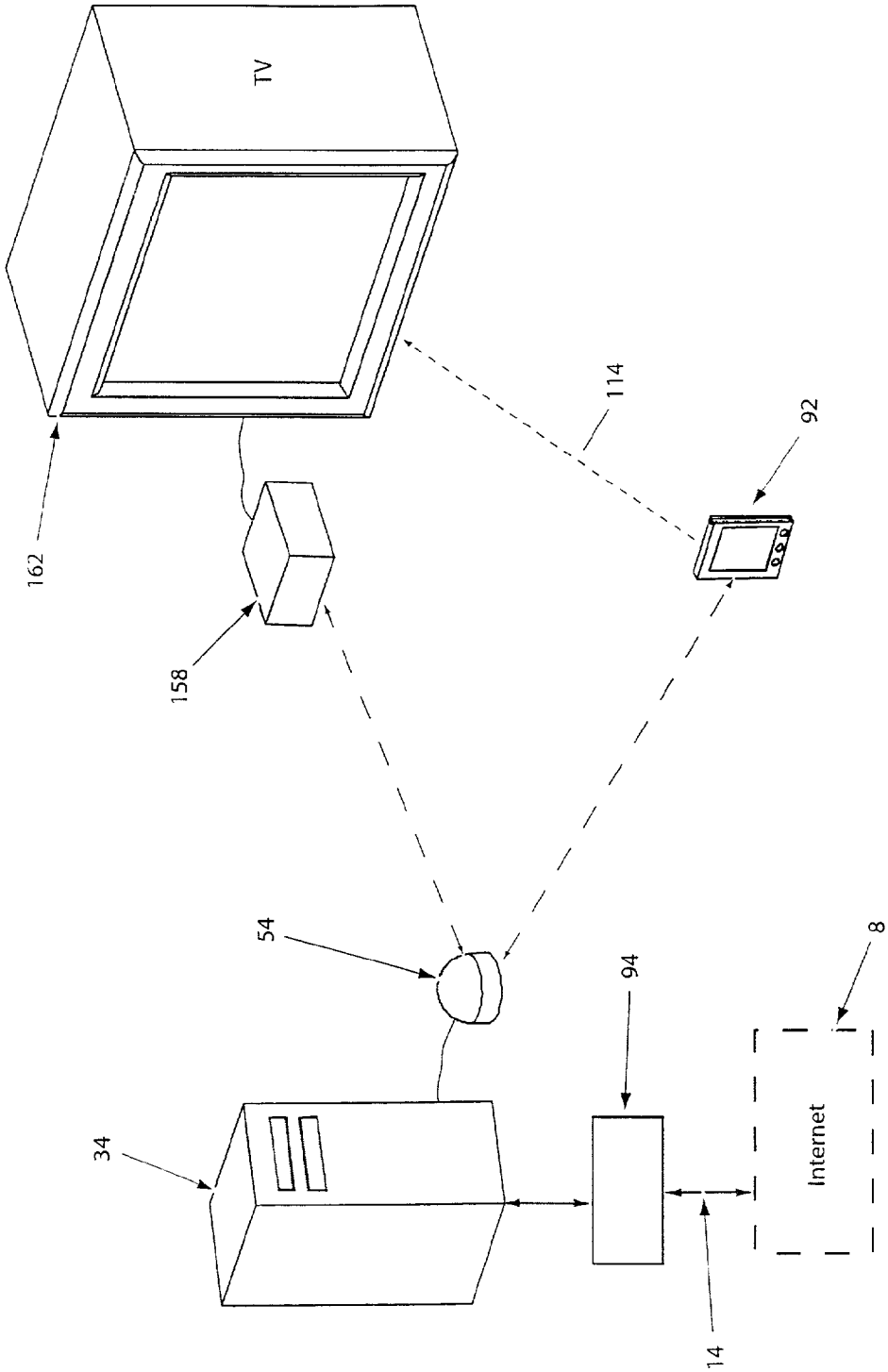

FIG. 27

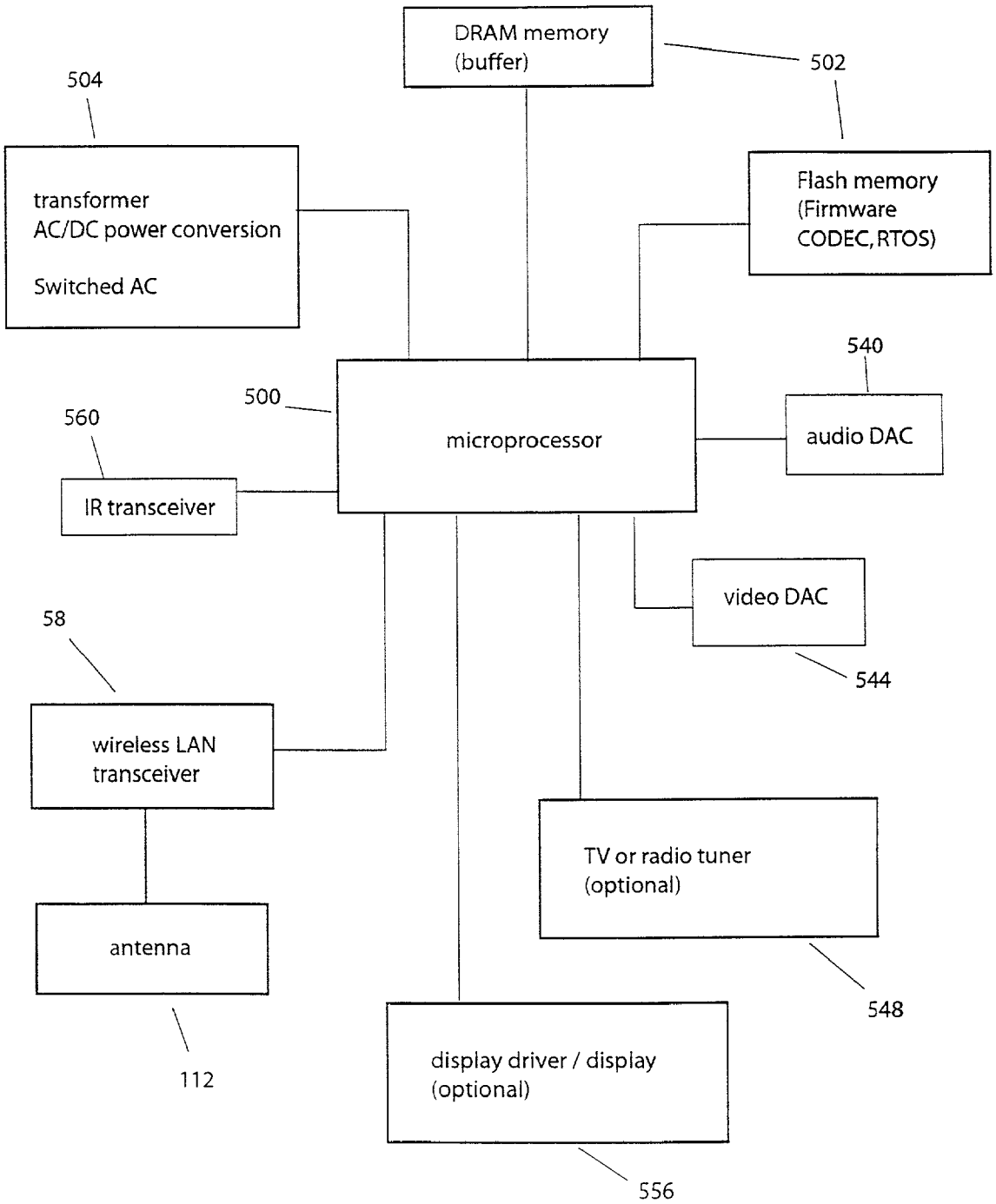
DRAM memory
(buffer)
502
504
transformer
AC/DC power conversion
Switched AC
Flash memory
(Firmware
CODEC, RTOS)
540
500
560
microprocessor
audio DAC
IR transceiver
video DAC
58
544
wireless LAN
transceiver
TV or radio tuner
(optional)
antenna
548
112
display driver / display
(optional)
556

FIG. 28

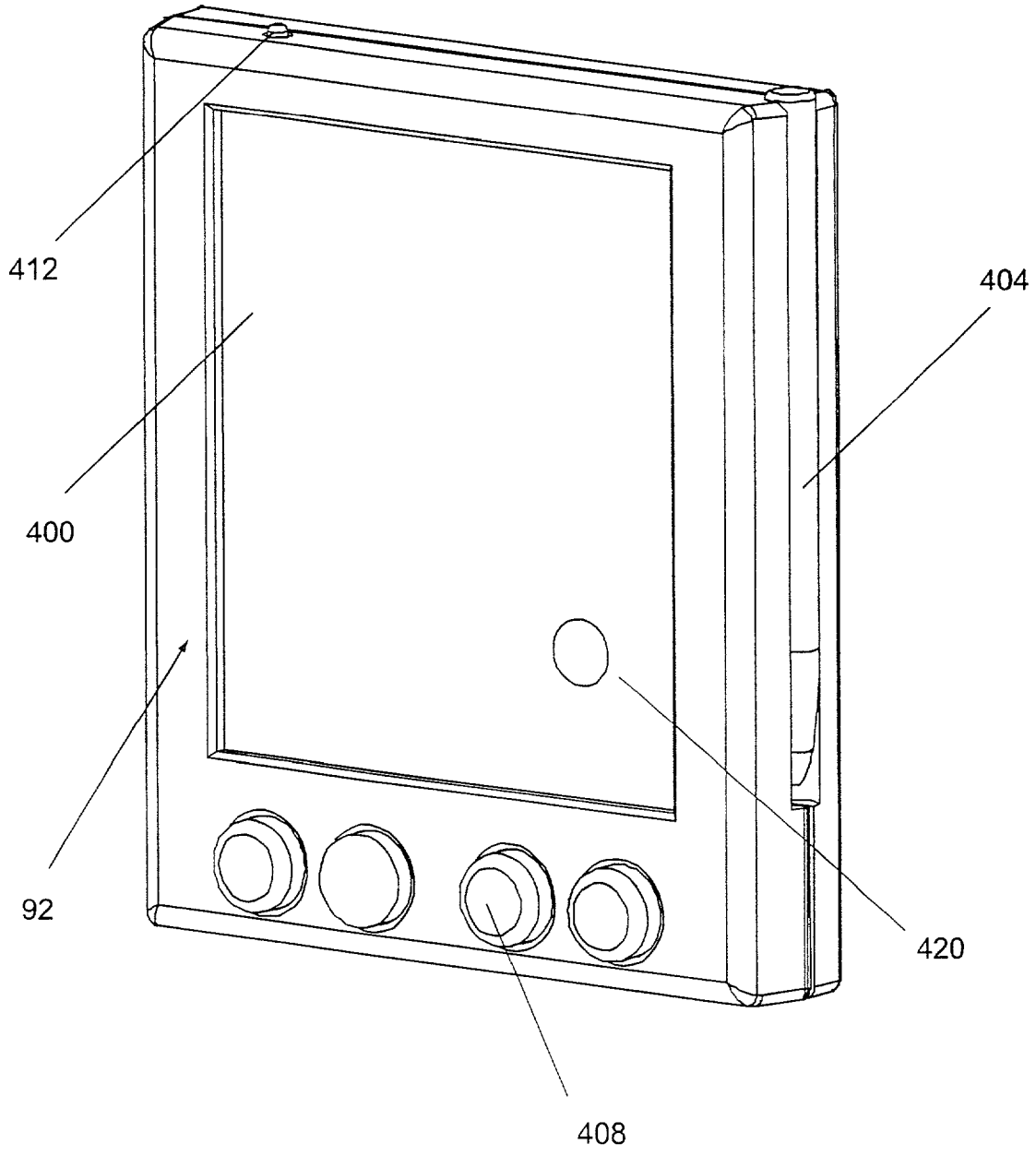

FIG. 29

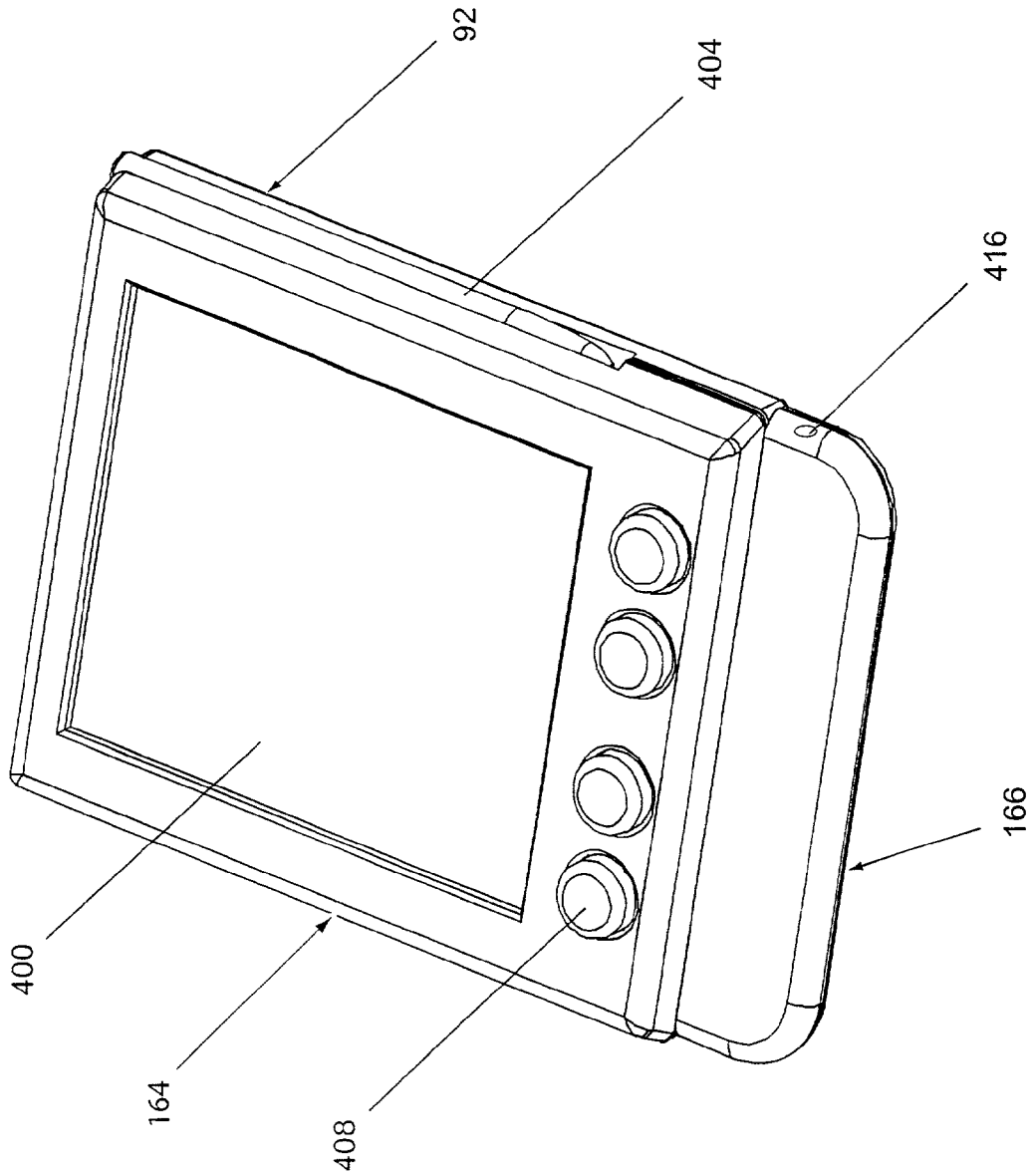

FIG. 30

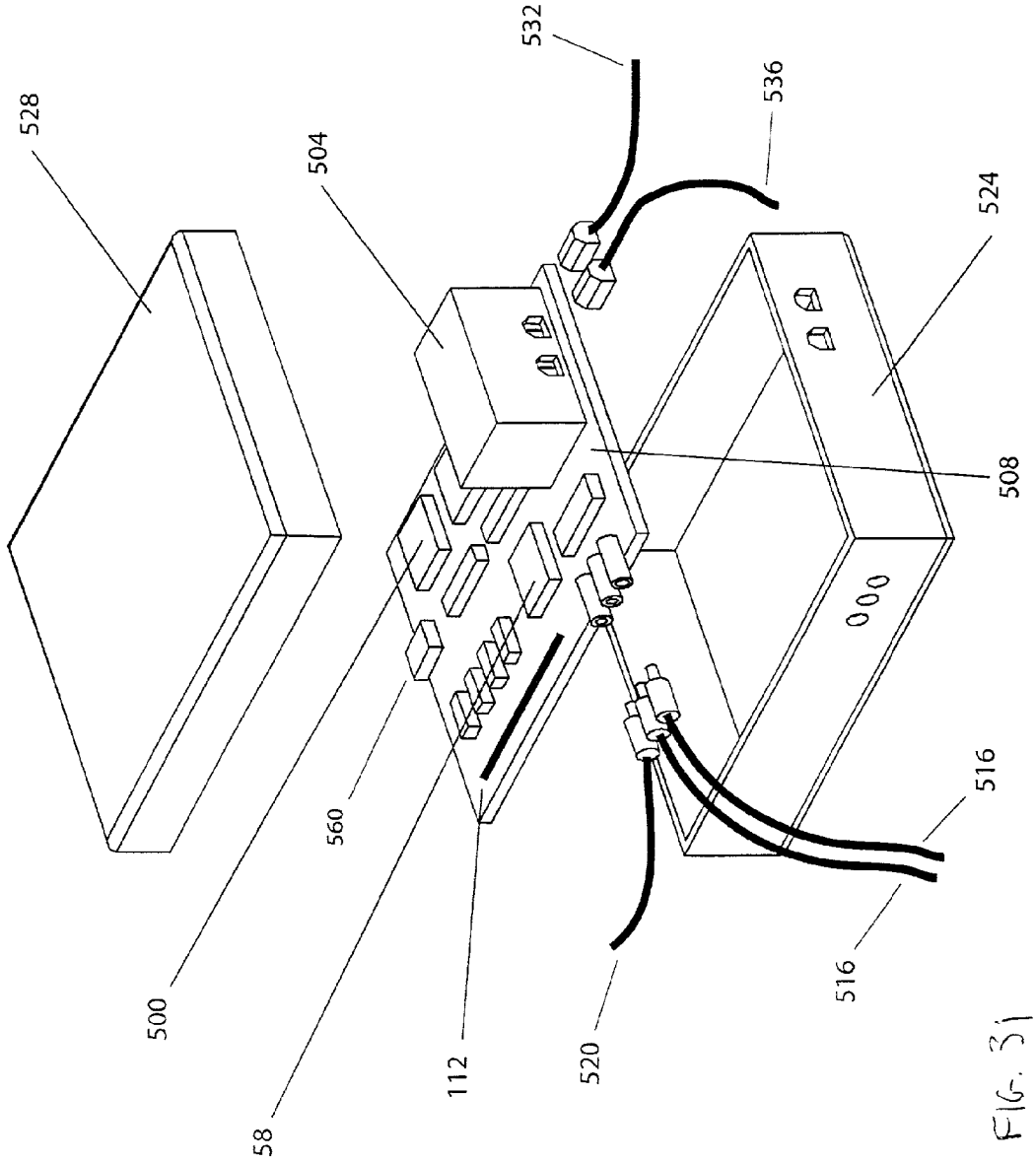

FIG. 31

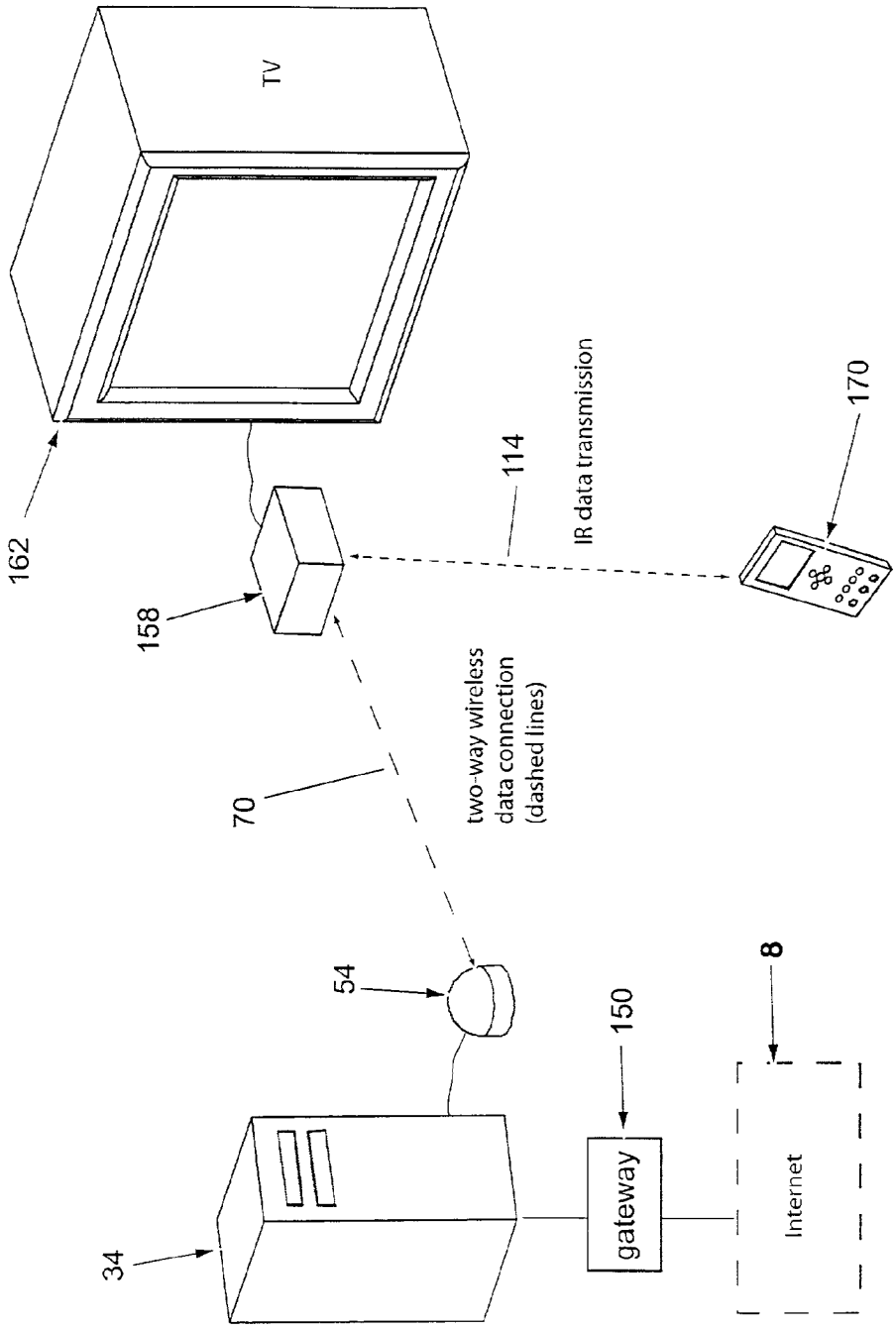
TV
162
158
114
IR data transmission
170
70
two-way wireless
data connection
(dashed lines)
54
150
8
34
gateway
Internet

FIG. 32

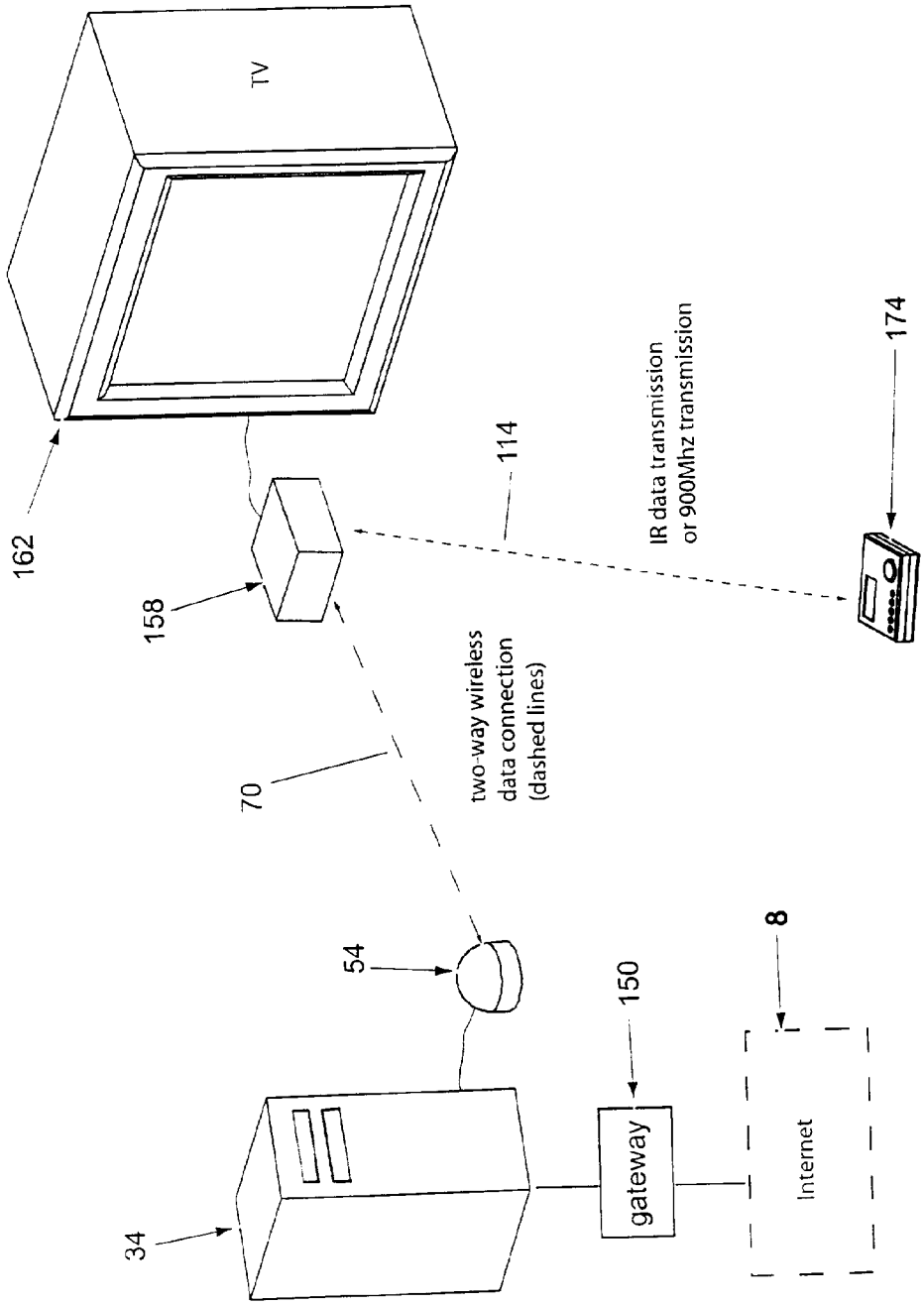
TV
162
158
114
IR data transmission
or 900Mhz transmission
174
70
two-way wireless
data connection
(dashed lines)
54
150
8
34
gateway
Internet

FIG. 33

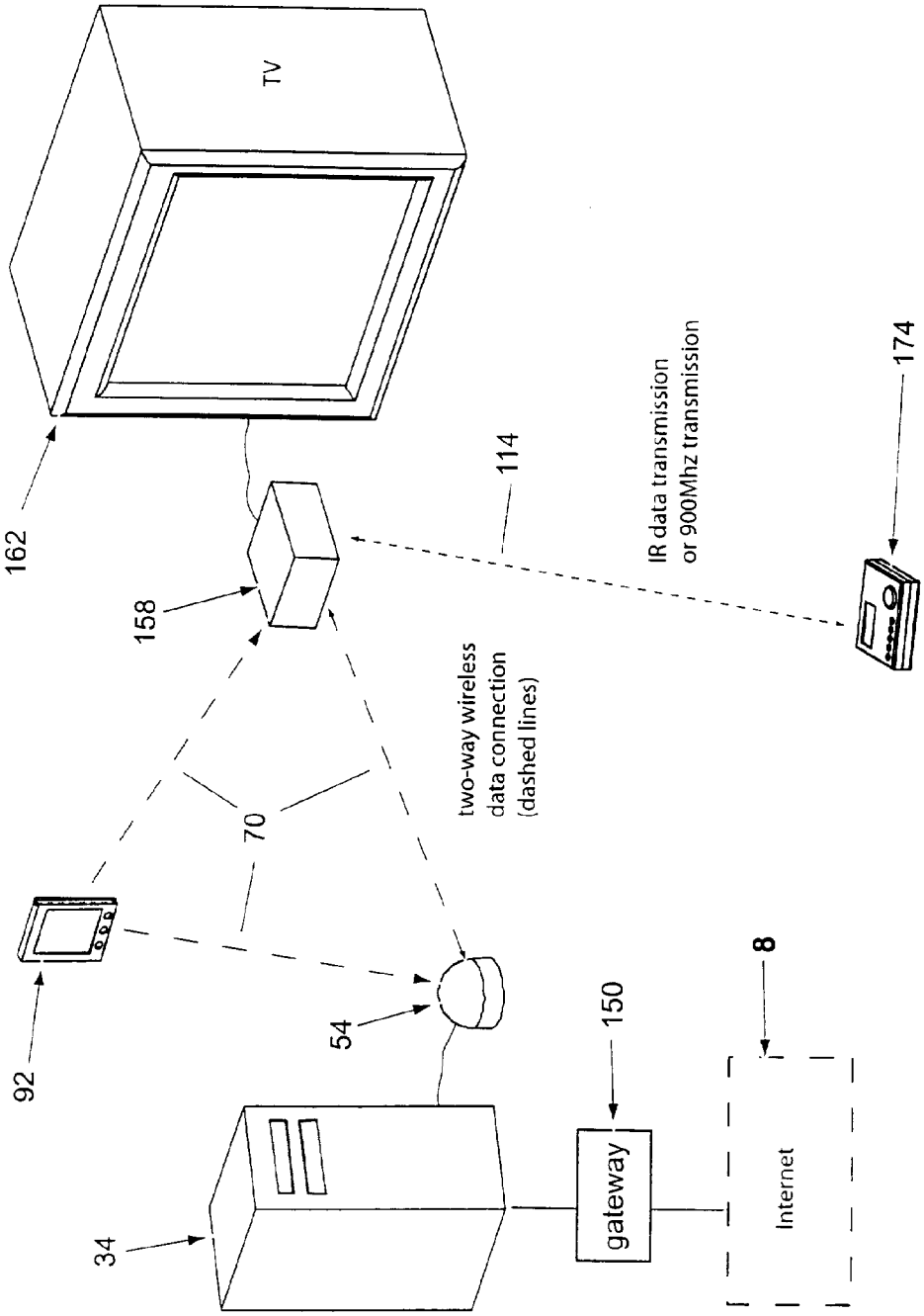
TV
162
158
114
IR data transmission
or 900Mhz transmission
174
two-way wireless
data connection
(dashed lines)
70
92
54
150
8
34
gateway
Internet

FIG. 34

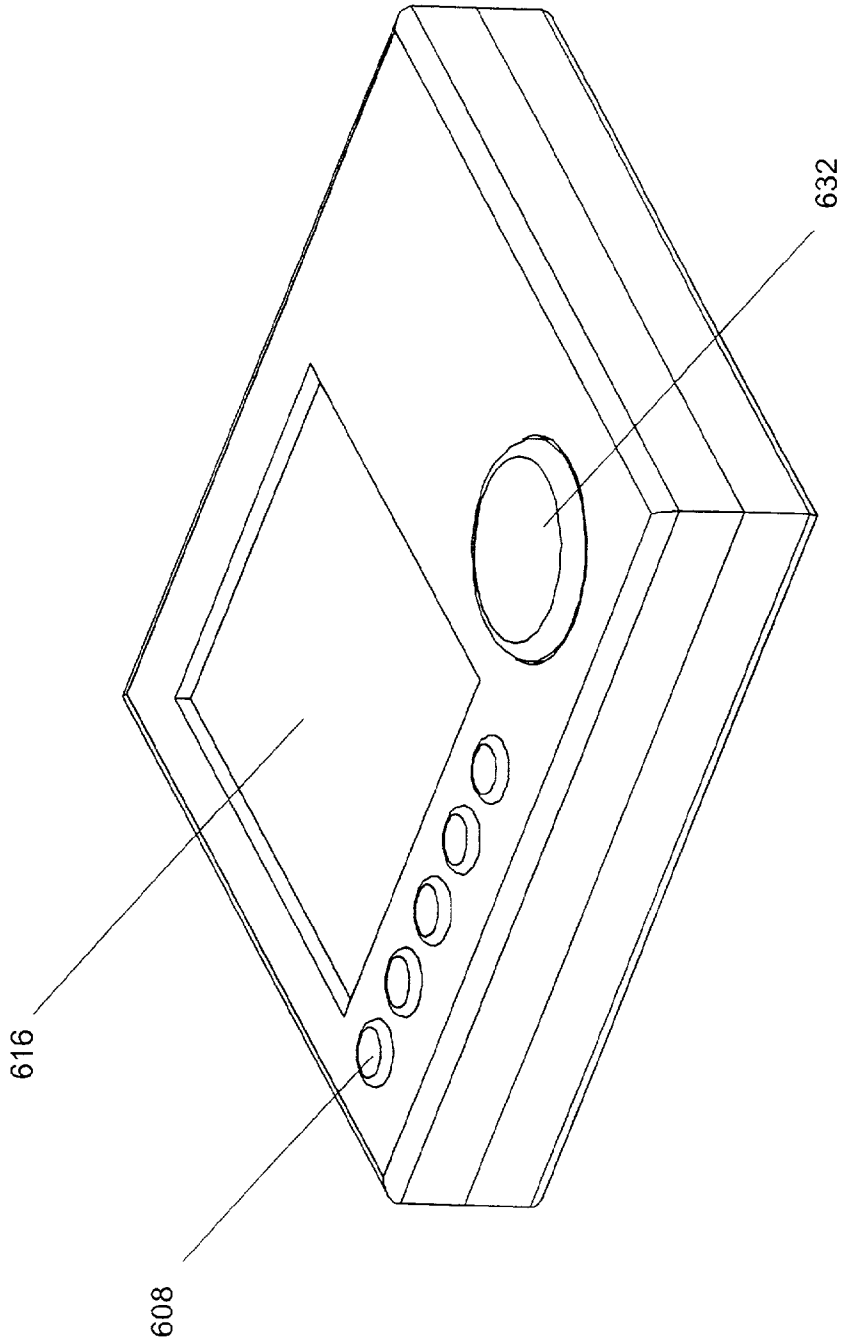

FIG. 35

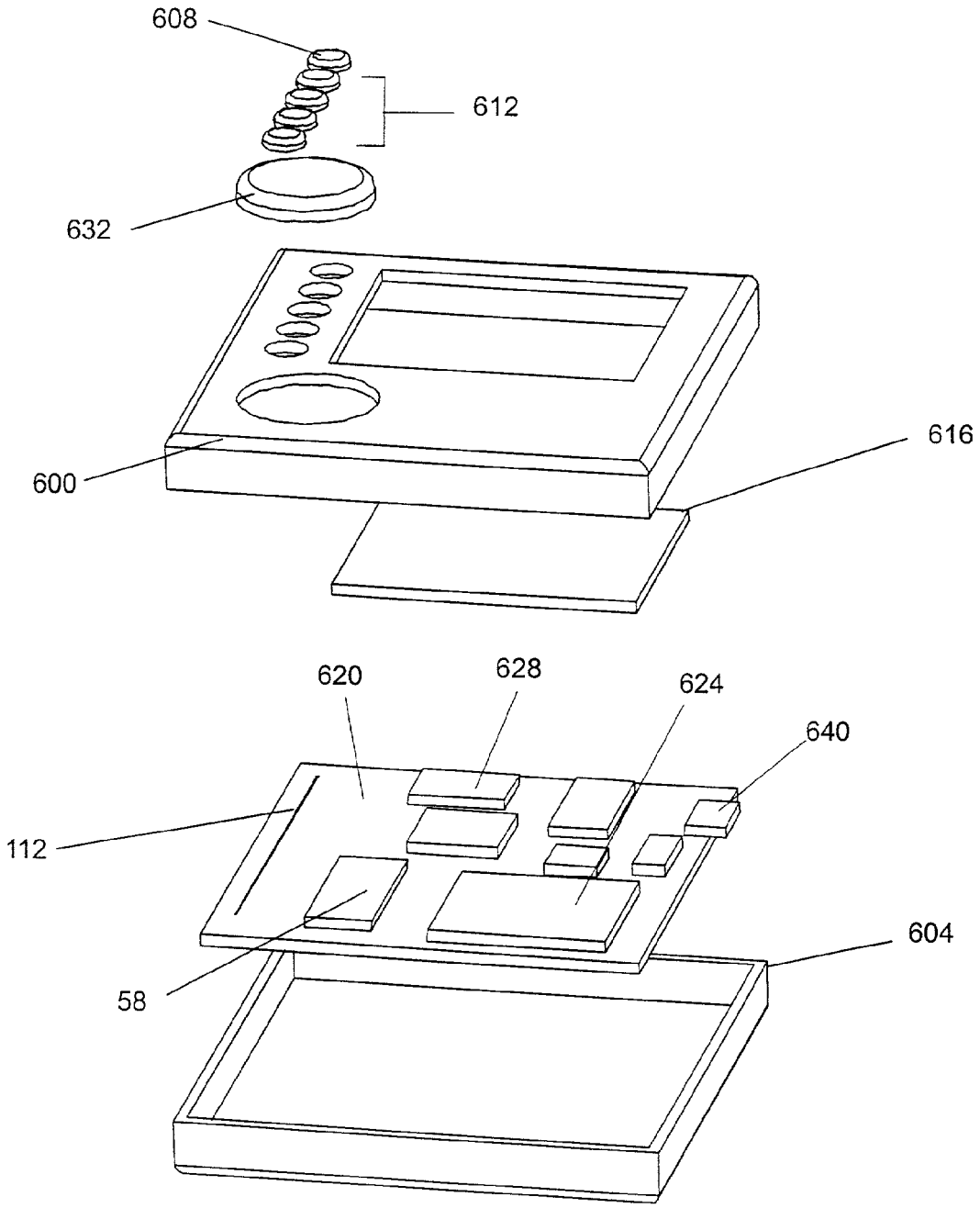

FIG. 36

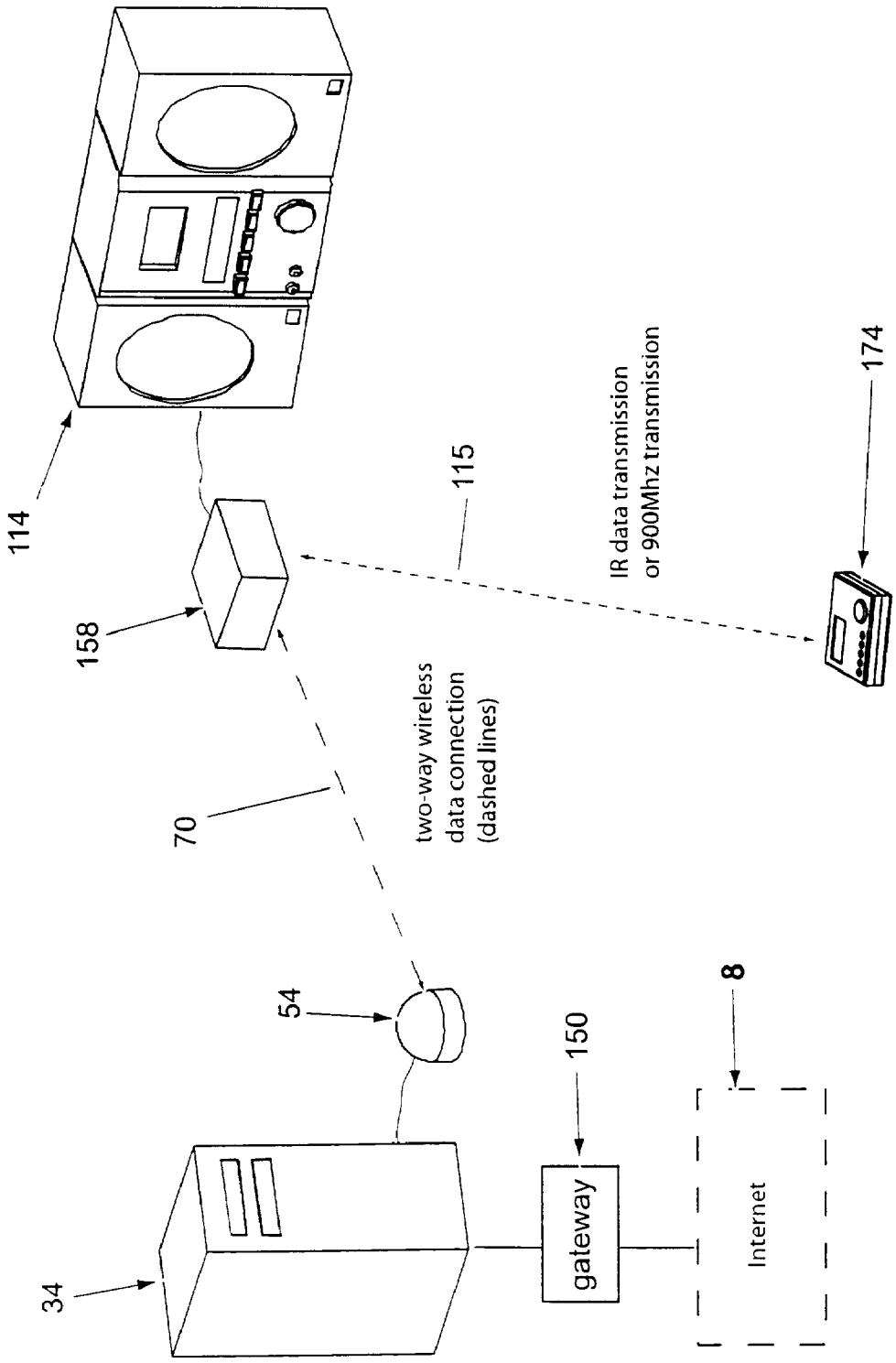
114
158
115
IR data transmission
or 900Mhz transmission
174
70
two-way wireless
data connection
(dashed lines)
54
150
8
34
gateway
Internet

FIG. 37

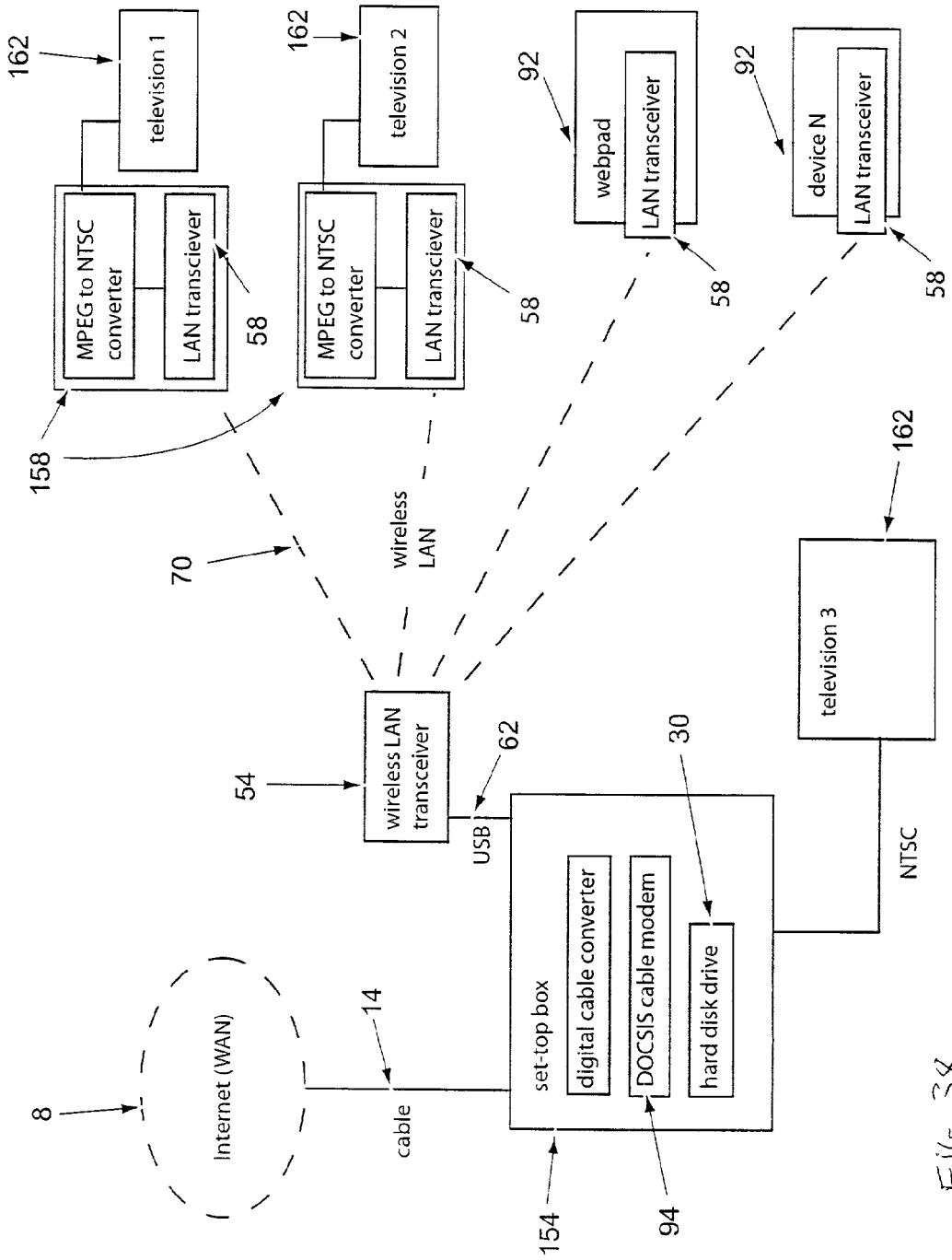
162
television 1
MPEG to NTSC converter
LAN transciever
58
158
162
television 2
MPEG to NTSC converter
LAN transciever
58
92
webpad
LAN transceiver
58
92
device N
LAN transceiver
58
70
wireless LAN
54
wireless LAN transceiver
62
USB
30
162
television 3
NTSC
8
Internet (WAN)
14
cable
set-top box
digital cable converter
DOCSIS cable modem
hard disk drive
154
94

FIG. 38

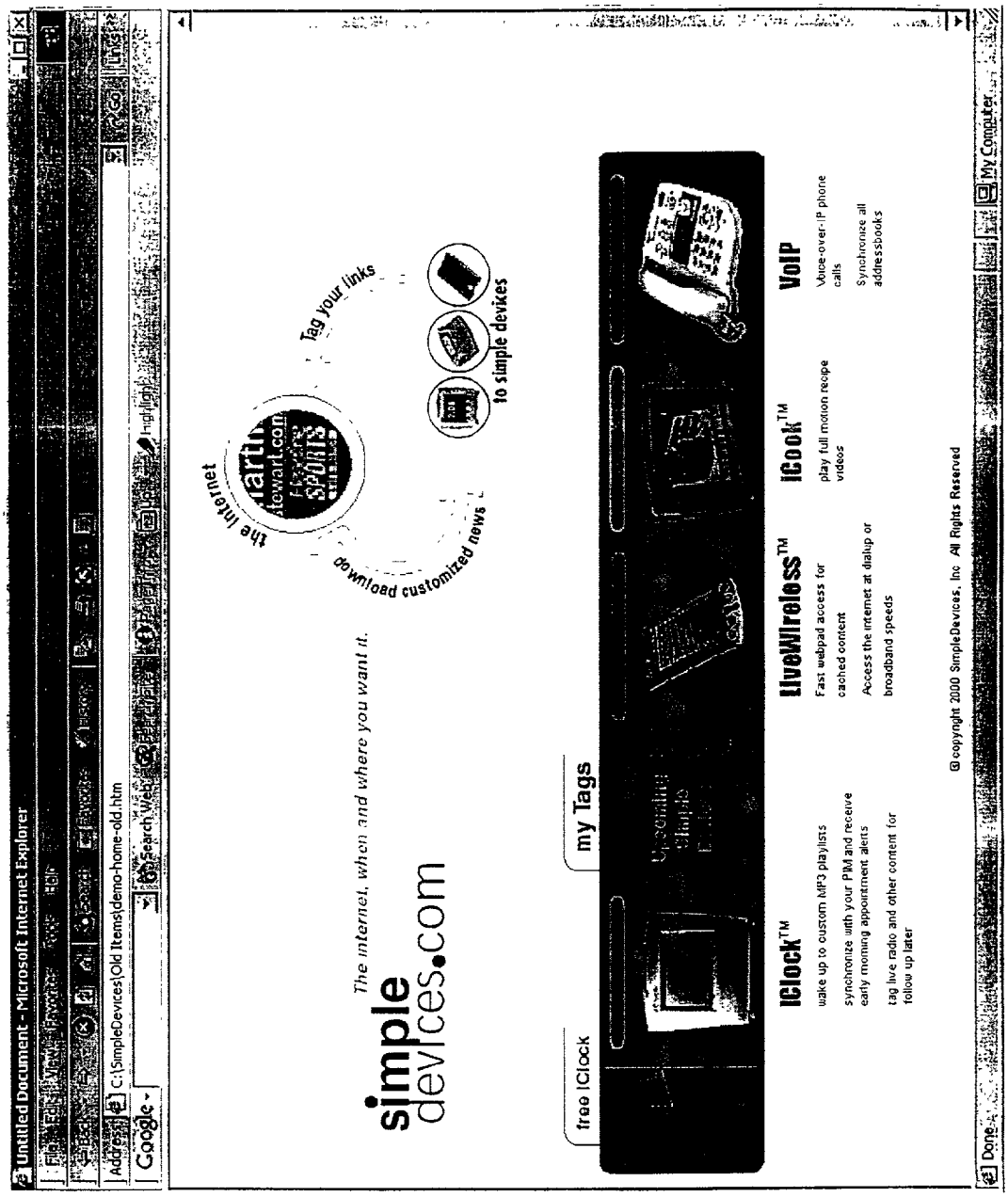
Untitled Document - Microsoft Internet Explorer
File Edit View Favorites Tools Help
Address C:\SimpleDevices\Old Items\demo-home-old.htm
Google
Search Web
Highlight
simple devices.com
The internet, when and where you want it.
the internet
Martha Stewart.com
Tag your links
download customized news
to simple devices
free iClock
my Tags
iClock™
wake up to custom MP3 playlists
synchronize with your PIM and receive early morning appointment alerts
tag live radio and other content for follow up later
liveWireless™
Fast webpad access for cached content
Access the internet at dialup or broadband speeds
iCook™
play full motion recipe videos
VoIP
Voice-over-IP phone calls
Synchronize all addressbooks
© copyright 2000 SimpleDevices, Inc All Rights Reserved
Done
My Computer

FIG. 39

C:\SimpleDevices\iclock web\SD-demo\iclockhome.htm - Microsoft Internet Explorer
C:\SimpleDevices\iclock web\SD-demo\iclockhome.htm
set up
how it works
new downloads
help
iclock home
iclock
simple devices com
first time? click here to set up your iclock
2:06
martha
click here to learn how you can receive your iClock for FREE!

FIG. 40

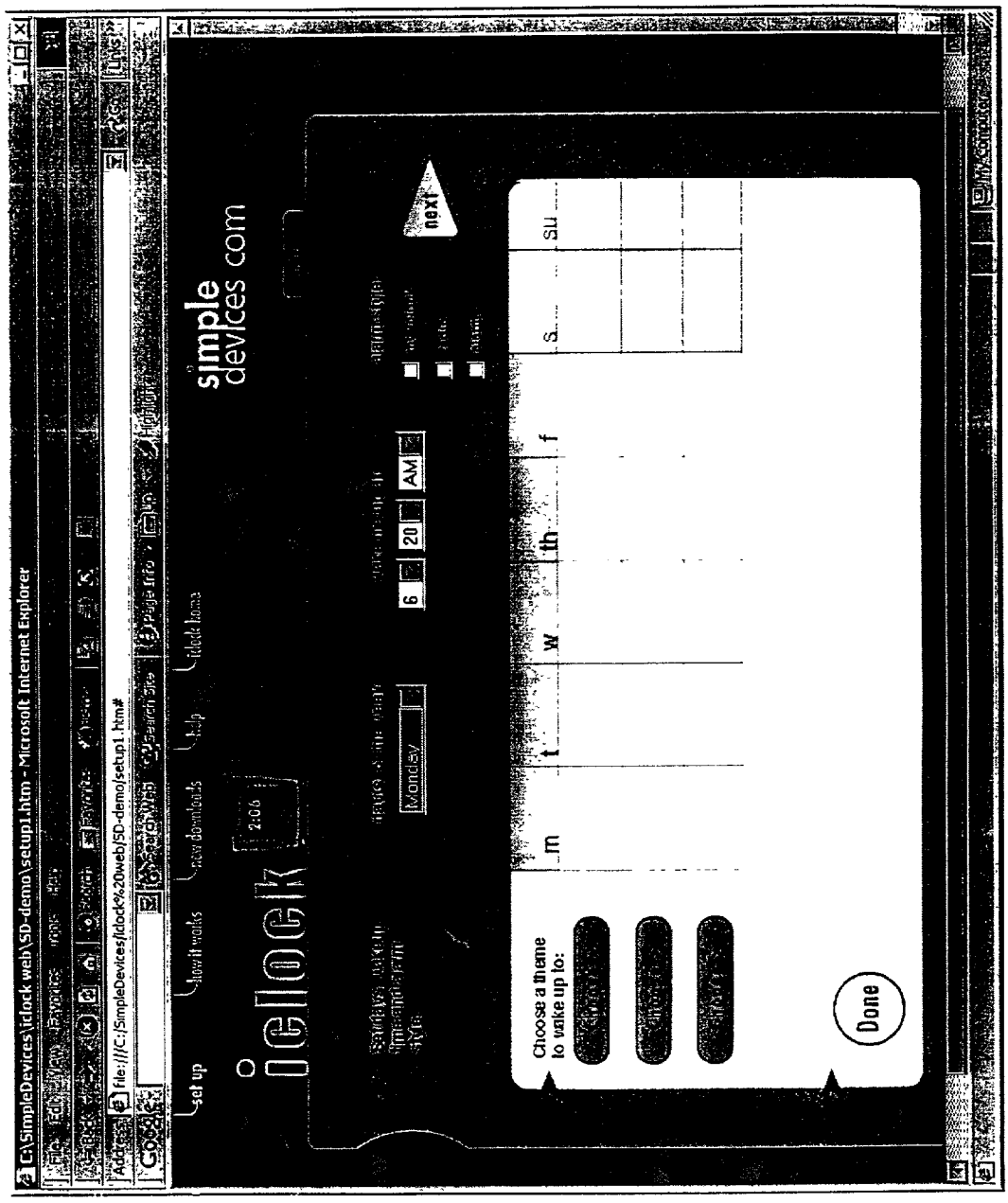
C:\SimpleDevices\idock web\SD-demo\setup1.htm - Microsoft Internet Explorer
set up
how it works
new downloads
help
idock home
idock
simple devices com
Monday
6
20
AM
next
Choose a theme to wake up to:
m
t
w
th
f
s
su
Done

FIG. 41

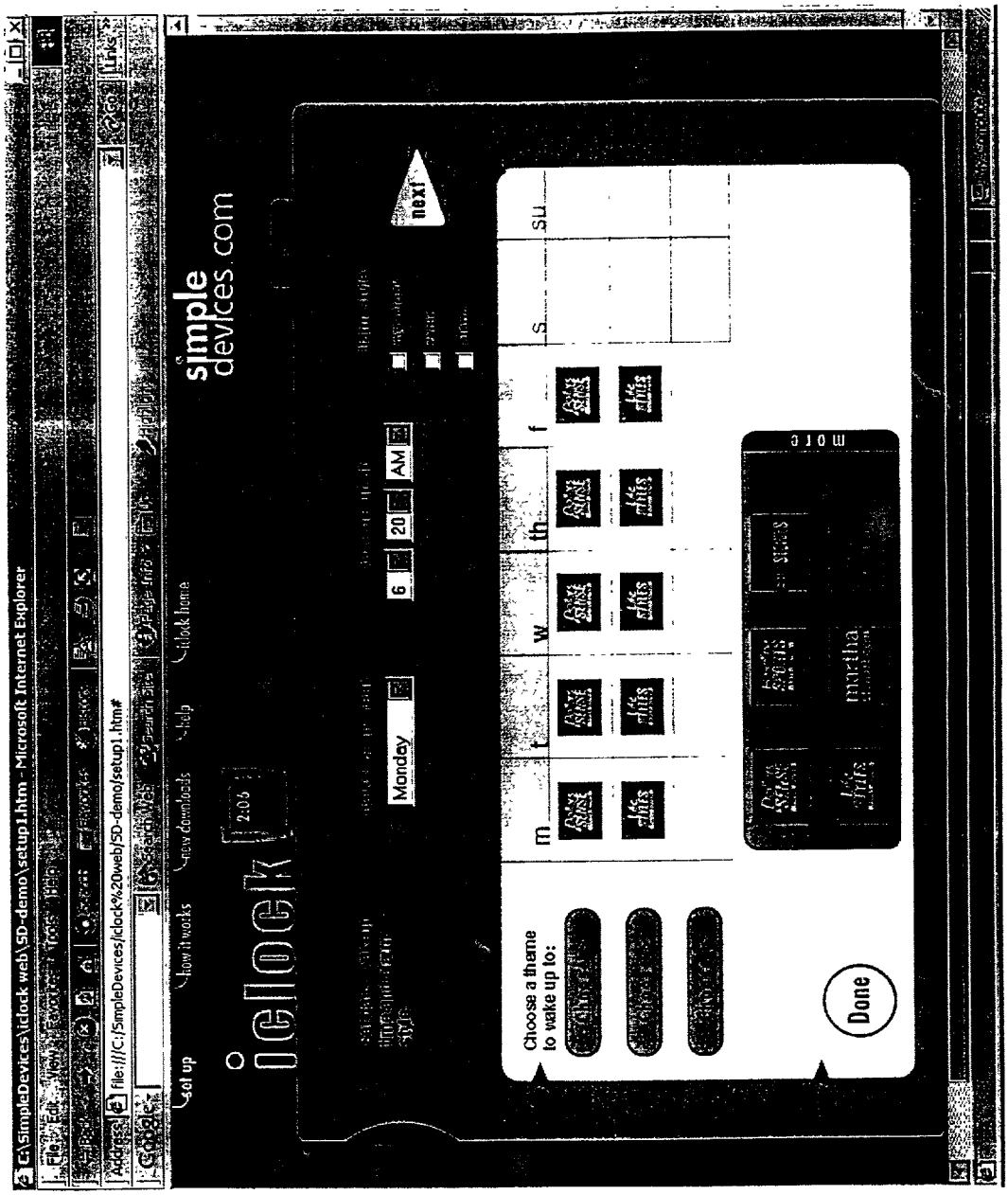
C:\SimpleDevices\iclock web\SD-demo\setup1.htm - Microsoft Internet Explorer
File Edit View Favorites Tools Help
Address file:///C:/SimpleDevices/iclock%20web/SD-demo/setup1.htm#
Links
Set up
How it works
New downloads
Help
iclock home
iclock
2:06
simple devices.com
Monday
6
20
AM
next
Choose a theme to wake up to:
m
t
w
th
f
s
su
more
martha
Done

FIG. 42

SYSTEM AND METHOD FOR PROVIDING CONTENT, MANAGEMENT, AND INTERACTIVITY FOR CLIENT DEVICES

RELATED APPLICATIONS

[0001] This patent application is a Continuation-in-part (CIP) of patent application Ser. No. 09/841,268, filed Apr. 24, 2001, entitled "System for Providing Content, Management, and Interactivity for Thin Client Devices."

[0002] This application claims the benefit of the filing date of the following U.S. patent applications:

[0003] U.S. Provisional Patent Application No. 60/199,638, filed Apr. 25, 2000, entitled "System for Presenting Data and Content from the Internet on Client Devices";

[0004] U.S. patent application Ser. No. 09/841,268, filed Apr. 24, 2001, entitled "System for Providing Content, Management, and Interactivity for Thin Client Devices";

[0005] U.S. Provisional Patent Application No. 60/268,434, filed Feb. 12, 2001, entitled "System for Delivering Content to Client Devices", and

[0006] U.S. Provisional Patent Application No. 60/223,872, filed Aug. 8, 2000, entitled "Home PC to Electronic Player Device Content Delivery System".

FIELD OF THE INVENTION

[0007] The present invention relates generally to ubiquitous computing devices and, more particularly, to a system for providing content, management, and interactivity for client devices.

BACKGROUND

[0008] The rapid buildup of telecommunications infrastructure combined with substantial investment in Internet-based businesses and technology has brought Internet connectivity to a large segment of the population. Recent market statistics show that a majority of households in the U.S. own at least one personal computer (PC), and a significant number of these PCs are connected to the Internet. Many households include two or more PCs, as well as various PC productivity peripherals such as printers, scanners, and the like. Decreases in the cost of PC components such as microprocessors, hard disk drives, memory, and displays, have driven the commoditization of PCs. Although the majority of household PCs are connected to the Internet by dialup modem connections, broadband connectivity is being rapidly adopted, and is decreasing in price as a variety of technologies are introduced and compete in the marketplace. A large majority of households in the U.S. and Europe are viable for at least one or more type of broadband connection, such as cable, DSL, optical networks, fixed wireless, or two-way satellite transmission.

[0009] A market for home networking technology has emerged, driven by the need to share an Internet connection between two or more PCs, and to connect all the PCs to productivity peripherals. There has been innovation in local area network (LAN) technology based on end-user desire for simplicity and ease of installation. Installing Ethernet cable is impractical for a majority of end-users, therefore a number of no-new-wires technologies have been introduced. The Home Phoneline Networking Association (HPNA) promotes networking products that turn existing phone wiring in the home into an Ethernet physical layer. Adapters are required that allow each device to plug into any RJ-11 phone jack in the home. The adapter modifies the signal from devices so that it can be carried by the home phone lines. Existing HPNA products provide data-rates equivalent to 10base-T Ethernet, approximately 10 Mbps. Networking technology that uses the AC power wiring in the home to carry data signals has also appeared. Similar to HPNA devices, adapters are required to convert data signals from devices into voltage fluctuations carried on to and off of the AC wires, allowing any AC outlet to become a network interface. Although both HPNA and power line networking products are convenient to use because they require no new wires, the advantage of AC power line products over HPNA is that AC power outlets are more ubiquitous than RJ-11 phone jacks.

[0010] Wireless radio-frequency (RF) LAN technology has also been introduced into the home networking market. Theoretically, wireless technology is the most convenient for the end user to install. There are currently two prevalent standards for wireless networking, Institute of Electrical and Electronics Engineers (IEEE) 802.11b and HomeRF. Both of these systems utilize the unlicensed 2.4 Ghz ISM band as the carrier frequency for the transmission of data. Both of these technologies have effective ranges of approximately 150 feet in a typical household setting. IEEE 802.11b is a direct sequence spread spectrum technology. HomeRF is a frequency-hopping spread spectrum technology. Adapters that are RF transceivers are required for each device to communicate on the network. In addition to utilizing Transmission Control Protocol/Internet Protocol (TCP/IP) protocols, IEEE 802.11b and HomeRF include additional encryption and security protocol layers so that the user's devices have controlled access to data being sent through the LAN.

[0011] Due to market competition and the effect of Moore's Law, home networking technology is greatly increasing in performance and availability, while decreasing in price. For example, the current data-rate roadmap shows HomeRF increasing from 10 Mbps to 20 Mbps, utilizing the 5 Ghz band. The IEEE 802.11 technology roadmap shows the introduction of 802.11a at 54 Mbps, also utilizing the 5 Ghz band. It is important to note that LAN data-rates are increasing much faster than wide-area data-rates, such as the data-rates provided by "last mile" technologies including DSL, DOCSIS. Wireless wide area data-rates are also improving slowly. Current digital cellular technology provides less than 64 Kbps data-rates, with most systems providing throughput in the 20 Kbps range.

[0012] While networked PCs with Internet connectivity provide greater convenience for productivity applications, there are other trends that are influencing end user's content experiencing habits. For example, Personal Video Recorders (hereafter PVRs are increasing in popularity. These devices are an improvement on VCR "time-shifting" functionality, allowing users to record, pause, and start live broadcast media, almost in real time. These devices digitize terrestrially broadcast television content and store the files on a hard disk drive, providing much faster random access, fast-forwarding, and rewinding. A graphical user interface is provided that allows users to make content preference

selections. A PVR supports the trend toward user controlled "anytime" access to digital content.

[0013] The MP3 digital audio format is an audio encoding technology that allows consumers to further compress digital audio files such as those found on Compact Disks, to much smaller sizes with very little decrease in sound quality. The MP3 format is the audio layer of MPEG-2 digital audio and video compression and transmission standard. For example, the MP3 format allows for compression of audio content to approximately 1 million bytes per minute of audio, at near Compact Disk quality. This capability, combined with a decrease in the cost of flash memory, a type of non-volatile silicon-based mass memory, has made it possible to develop affordable, portable digital audio playback devices. These are devices that are significantly smaller than portable CD players because they contain no moving parts, only flash memory and a microprocessor for decoding MP3 compressed audio content.

[0014] PC-based MP3 software players have been created that provide a convenient graphical user interface and software decoding of MP3 files. Some technology allows users to play MP3 files on their PC, using an existing sound card with external speakers. However, to listen to MP3s the user must interface with the PC, using a mouse and keyboard, and must be nearby the PC sound output equipment.

[0015] The smaller size of MP3 encoded audio files has also enabled these files to be shared by users across the Internet, since the transfer of these files takes an acceptable amount of time. Internet-based digital music access and distribution service businesses have appeared that provide various means for users to gain access to digital audio files.

[0016] In addition to music, many other types of audio content are now available in digital format, such as spoken-word content, news, commentary, and educational content. Digital files containing audio recordings of books being read aloud are available for download directly from their website.

[0017] Graphic content such as video and still images are also increasingly available. Digital still and video cameras allow the capture and rapid transfer of images. Products exist that allows users to share digital images across the Internet. One example is a frame housing similar to a conventional picture frame, but with a large LCD in place of a photograph. The device includes a microprocessor, memory, and modem. The device must be plugged into a phone line, and it functions by automatically dialing-up to a server where new digital images are stored. Based on user instructions made through a setup function on a website, a group of photos are sent to, and stored on, and displayed by the device. These picture frames may be costly due to the fact that they includes a large LCD, and also because they must include enough memory to store the digital images. This type of picture frame is an example of digital content delivered beyond the PC.

[0018] Internet access is also available through the use of wireless phones with Internet browsing capability and Personal Digital Assistants (PDAs) with wide-area wireless connections. One such device uses the paging network, which provides among the lowest bandwidth connection available at approximately 2.4 Kbps. Another such device uses the cellular wireless infrastructure which provides a maximum of 19.2 Kbps. Many wireless cellular phones now provide "wireless web" limited browsing capability. The slow data-rates provided by these products, as well as limited display area and awkward methods of user interaction, have resulted in slow adoption rates, and signals that users increasingly demand rich media experiences that can only be supported by broadband data-rates. Additionally, use of these products supports the trend of access to Internet content beyond the PC.

[0019] Other technology providers provides software that channels content from the Internet to a handheld device through a PC with an Internet connection. The handheld must be docked in its cradle for the transfer to take place. The personal computer is used mainly as a communication link, as none of the content is stored on the computer, it passes through the PC and is stored on the handheld device. The user removes the handheld device from the cradle and then accesses the information from the last download on the handheld device. Many systems do not provide for rich media experiences as that example of a handheld device. Other devices are limited in processing power, and handheld devices do not leverage the processing power of the personal computer. However, handheld devices do further support the trend of access to Internet content beyond the PC.

[0020] Cable, as well as satellite TV services are efficient in providing video content to a wide variety of users. However, most existing cable and satellite systems provide video delivery services on a broadcast model, that is, customers must choose from a set number of audio/video programs that are simultaneously broadcast, with the schedule determined by the broadcast networks. With the overlaying of data services over existing cable lines, there is the opportunity to provide a video-on-demand service whereby customers could order video programming of their choice at any time. However, a simple calculation will show that pure video-on-demand cannot be supported by the bandwidth available on the existing networks, due to the high data-rates required to transport high-quality video and audio in real-time.

[0021] The convergence of the digitization of content, combined with the proliferation and decreasing cost of networking and data processing components, is providing the opportunity to deliver rich content via the Internet, to a variety of inexpensive devices beyond the personal computer.

[0022] What is needed is a system that provides an economically optimal architecture and management system for allowing users to set up preferences for content of varying types, including rich content, and other services, to be automatically delivered to inexpensive client devices.

SUMMARY OF THE INVENTION

[0023] A system and a method for providing content, management and interactivity for client devices are described. Digital data based on user specified preferences is automatically obtained and transferred from a wide area network to a computer. The digital data is then automatically sent from the computer to a client device using a wireless data transceiver. In one embodiment, the client device is a television.

BRIEF DESCRIPTION OF THE DRAWINGS

[0024] The present invention will be understood more fully from the detailed description given below and from the

accompanying drawings of various embodiments of the invention, which, however, should not be taken to limit the invention to the specific embodiments, but are for explanation and understanding only:

[0025] **FIG. 1**. illustrates a block diagram of one embodiment of a system at the highest level;

[0026] **FIG. 2**. illustrates a block diagram of one embodiment of a system control application;

[0027] **FIG. 3**. illustrates one embodiment of an example console GUI on the PC desktop;

[0028] **FIG. 4**. illustrates one embodiment of a web-based content guide GUI window and an audio device content editor GUI on a PC display desktop window;

[0029] **FIG. 5**. illustrates one embodiment of a web-based content guide GUI window and an audio device content editor GUI after a content object has been dragged and placed;

[0030] **FIG. 6**. illustrates one embodiment of a web-based content guide GUI window and an audio device content editor GUI with a dialog box launched;

[0031] **FIG. 7**. illustrates one embodiment of a web-based content guide GUI window and an audio device content editor GUI with a "new playlist" text box open;

[0032] **FIG. 8**. illustrates one embodiment of a web-based content guide GUI window and an Internet clock content editor GUI;

[0033] **FIG. 9**. illustrates one embodiment of a web-based content guide GUI window and an Internet clock content GUI after a content module has been dragged and placed;

[0034] **FIG. 10**. illustrates one embodiment of a web-based content guide GUI window and an Internet clock content GUI after a content module has been expanded from "Monday" to "Friday";

[0035] **FIG. 11**. illustrates one embodiment of a web-based content guide GUI window and an Internet clock content GUI and a softkey assignment pop-up menu;

[0036] **FIG. 12**. illustrates an isometric view of one embodiment of a audio playback device;

[0037] **FIG. 13**. illustrates an isometric view of one embodiment of an Internet clock;

[0038] **FIG. 14**. illustrates one embodiment of a tag aggregation web page;

[0039] **FIG. 15**. illustrates one embodiment of a PC desktop with a console and an audio device controller;

[0040] **FIG. 16**. illustrates one embodiment of a PC desktop with a console and an Internet clock controller;

[0041] **FIG. 17**. illustrates a functional block diagram of one embodiment of a storage gateway;

[0042] **FIG. 18**. illustrates one embodiment of a digital image editor GUI;

[0043] **FIG. 19**. illustrates a block diagram of one embodiment of an audio playback device/stereo system;

[0044] **FIG. 20**. illustrates an alternative embodiment of the audio playback device with a remote control removed;

[0045] **FIG. 21**. illustrates a block diagram of one embodiment of a tag response sequence;

[0046] **FIG. 22**. illustrates one embodiment of a PC desktop with a content preference selection web page;

[0047] **FIG. 23**. illustrates a system block diagram of one embodiment of a storage gateway peripheral;

[0048] **FIG. 24**. illustrates one embodiment of a a home PC storage server setup flowchart;

[0049] **FIG. 25**. illustrates a flowchart of one embodiment of a process of programming client device content on a website;

[0050] **FIG. 26**. illustrates one embodiment of a home PC storage server operation sequence;

[0051] **FIG. 27**. illustrates a schematic for one embodiment of a system for delivering content with a wireless LAN-to-NTSC converter and a TV;

[0052] **FIG. 28**. illustrates a block diagram of one embodiment of the wireless LAN-to-NTSC converter hardware;

[0053] **FIG. 29**. illustrates an isometric view of one embodiment of a webpad;

[0054] **FIG. 30**. illustrates an isometric view of one embodiment of a PDA with wireless LAN adapter module attached;

[0055] **FIG. 31**. illustrates an isometric exploded view of one embodiment of a wireless LAN-to-NTSC converter;

[0056] **FIG. 32**. illustrates a schematic of one embodiment of an interactive digital video system with a LAN TV remote control;

[0057] **FIG. 33**. illustrates a schematic of one embodiment of a system with a TV providing an alarm clock function;

[0058] **FIG. 34**. illustrates a schematic of one embodiment of a system with a TV providing an alarm clock function with a webpad included;

[0059] **FIG. 35**. illustrates an isometric view of an alarm clock remote control;

[0060] **FIG. 36**. illustrates an isometric exploded view of one embodiment of a alarm clock remote control;

[0061] **FIG. 37**. illustrates a schematic of one embodiment of a system with a stereo system providing an alarm clock function;

[0062] **FIG. 38**. illustrates one embodiment of a system for providing content, distribution, management, and interactivity for client devices;

[0063] **FIG. 39**. illustrates one embodiment of an image of a webpage for selecting a client device to program;

[0064] **FIG. 40**. illustrates one embodiment of an image of a webpage which is a first setup page for an Internet clock;

[0065] **FIG. 41**. illustrates one embodiment of an image of a webpage for programming the content for an Internet clock; and

[0066] **FIG. 42**. illustrates one embodiment of an image of a webpage showing the results of a user's selection of content for an Internet clock.

DESCRIPTION OF PREFERRED EMBODIMENT

[0067] A system and a method for providing content, management and interactivity for client devices are described. In the following description, for purposes of explanation, numerous specific details are set forth in order to provide a thorough understanding of the present invention. It will be apparent, however, to one skilled in the art that the present invention can be practiced without these specific details. In other instances, well-known structures and devices are shown in block diagram form in order to avoid obscuring the present invention.

[0068] A set of definitions is provided below to clarify the present invention.

Definitions

[0069] The Internet is used interchangeably with the term web or worldwide web. Both of these are defined as the worldwide network of PCs, servers, and other devices.

[0070] Broadband connection is defined as a communications network in which the frequency bandwidth can be divided and shared by multiple simultaneous signals. A broadbandconnection to the Internet typically provides minimum upstream and downstream data-rates of approximately 200K or more bits per second. There are many different types of broadband connections including DSL, cable modems, and fixed and mobile wireless connections.

[0071] A Data Over Cable System Interface Specification (DOCSIS) modem is an industry standard type of cable modem that is used to provide broadband access to the Internet over a coaxial cable physical layer that is also used for the delivery of cable TV signals (CATV). DOCSIS modems are well known in the telecommunications industry and will not be described here in detail.

[0072] A Digital Subscriber Line (DSL) modem is also an industry standard type of modem that is used to provide broadband access to the Internet, but over conventional copper phone lines (local loops). DSL modems are well known in the telecommunications industry and will not be described here in further detail.

[0073] The term gateway, used interchangeably with broadband gateway, is defined as an integral modem and router, and may include hub functionality. The modem function is used to change voltage fluctuations on an input carrier line (a DSL line input or a cable TV input) into digital data.

[0074] Routers are devices that connect one distinct network to another by passing only certain IP addresses that are targeted for specific networks. Hubs allow one network signal input to be split and thus sent to many devices.

[0075] Gateway storage peripheral is defined as an add-on storage device with processing power, an operating system, and a software application that manages the downloading and storage of data. An example scenario for the use of a gateway storage peripheral is a system where a user has a DOCSIS modem and would like to add an always-on storage capability. The gateway storage peripheral is connected to the DOCSIS modem via a USB port or an Ethernet port in the DOCSIS modem. A gateway storage peripheral in combination with a DOCSIS modem or any type of broadband modem is considered a storage gateway system. A PC that is always left on and connected to an always-on gateway with a DSL or broadband cable connection is considered a storage gateway system.

[0076] The term "message" is defined as information that is sent digitally from one computing device to another for various purposes. The term "content" is used to mean the information contained in digital files or streams. For example, content may be entertainment or news, or audio files in MP3 format. "Data" is used to mean information such as digital schedule contents, responses from devices sent back through the system, or digital messages and email. "Content" and "data" are sometimes used interchangeably. "Client devices" are those devices that are not fully functional without a host device such as a personal computer.

[0077] Local Area Network (LAN) is defined as a network structure that includes two or more devices that can communicate with other devices utilizing a shared communication infrastructure, including wired network technologies, such as Ethernet, or wireless network technologies such as Institute of Electrical and Electronics Engineers (IEEE) 802.11b or HomeRF technology. Wireless LAN technology such as IEEE 802.11b and HomeRF are based on the unlicensed 2.4 Ghz ISM (Industrial, Scientific, and Medical) frequency band and are well known the telecommunications and LAN industries. These networking technologies utilize Transmission Control Protocol/Internet Protocols (TCP/IP) protocols. A LAN typically constitutes a group of interconnected devices that share a common geographic location and are typically grouped together as a subnet. A local network, for example, would be a home network where several computers and other smart devices would be digitally connected for the purpose of transferring content and data, controlling each other, sharing programming, or presenting data and content to a user.

[0078] Codec (Compression/Decompression algorithm) is a software application that is used to decode (uncompress) encoded (compressed) media files or streams. Most content is stored and sent in a compressed format so that the content files are smaller and thus take up less storage space and use less bandwidth when being transferred via the Internet. The content is then decoded at the playback device. For example, MP3 audio files are encoded and must be decoded by a microprocessor running the codec in order for the audio content to be presented to the user in an analog format.

[0079] HTTP is Hyper-text transfer protocol, the protocol used by Web browsers and Web servers to transfer files, such as text and graphic files.

[0080] Data-rate is defined as the data throughput of a telecommunications system or technology, and is measured in a quantity of bits per second, such as millions of bits per second (Mbps).

Overview

[0081] First, a description of the various components of the system is provided. Then, a description of three functional modes is provided. It should be noted that the functionality of the software and hardware pertinent to the invention disclosed in this document is described at several levels including at the interface level (what the end user sees and experiences) and at the action level (software and hardware interactions involving digital messages, content,

and data). It is assumed that software engineers of reasonable ability would be able to program the functions described here using common programming languages and tools.

[0082] **FIG. 1** illustrates a block diagram of one embodiment of a system at the highest level. The system provides a communication connection and a content and data management system including software and hardware on three different computing platforms: (1) the Internet **8**, (2) a local PC **34** or PC **34** and a storage gateway **38**, and (3) the local client devices **78***a, b, c*, and *d*. One embodiment of a PC **34** is shown in **FIG. 37**. In one embodiment, PC **34** is a conventional computer including a microprocessor, system memory, hard disk drive **30**, display, keyboard, and mouse, and runs the Windows operating system, provide by Microsoft Coproration. PC **34** also includes a Universal Serial Bus (hereafter USB) port for connecting peripheral devices. PC **34** is connected to content and data **10** on Internet **8** via a wide area network broadband communication link **14** that provides data delivery rates ranging from 500 kbps to 3,000 kbps.

[0083] In one embodiment, the broadband connection **14** is maintained by DOCSIS storage gateway **38**. **FIG. 17** illustrates a functional block diagram of one embodiment of a storage gateway **38**. Hard disk drive **30** is combined with a conventional DOCSIS cable modem and a HomeRF LAN transceiver **50**. These subsystems are controlled by a computer comprised of a microprocessor **280**, and the SDRAM **284** running an operating system. The core module **42** software application described below, runs on and functionally connects storage gateway **38** to the other system components.

[0084] Referring again to **FIG. 1**, in one embodiment, the high-speed LAN connection **70** between PC **34**, storage gateway **38**, and devices **78**, is a HomeRF wireless network. The communications protocol between PC **34** and Internet **8** is HTTP and TCP/IP. The GUI module **46** software aspect of system control application **18** exists on PC **34**. In one embodiment, core module **42** aspect of system control application **18** exists and is run on both storage gateway **38** and on PC **34**. The communication message structure between client devices **78** and PC **34** and storage gateway **38** are XML formatted messages **74** sent over HTTP.

Web Content Guide

[0085] Referring again to **FIG. 1**, content and data **10** on Internet **8** may be expressed on web pages as an organization of text and graphical information, some of which is configured as interactive hyperlinks, all of which are formatted using HTML for presentation to end user's PCs **34** via HTTP communication protocols. A content selection web page **22** is shown in **FIG. 4** through **FIG. 11**. The graphical interactive representation of the portal to the end user is as a series of hyper-linked web pages and hyper-linked text and images. The physical manifestation of the portal is that of software and data stored on servers located at various and disparate physical locations, but connected by Internet **8**.

[0086] Content **10** on Internet **8** may be arranged for delivery to local client devices **78***a, b, c*, and *d* by a system that allows for graphical icons, referred to in this disclosure as content objects **20**, that exist on content selection web page **22**, to be dragged and dropped onto content editors on a PC **34**. Drag and droppable content object **20** is a graphical representation of a file system path that points to a digital content file stored locally on hard disk drive **30** on PC **34** or on storage gateway **38**, or on a server on Internet **8**, or is the graphical designation of a URL or IP address and port number of an digital content stream originating on a server on Internet **8**. The purpose of the portal is to simplify and facilitate the discovery and selection of content **10** from Internet **8** for later use on client devices **78**.

[0087] Content selection web page **22** capability may include, but is not limited to the following functionality:

[0088] 1) Presentation and organization of content and or links to content according to file type (e.g. MP3, MPEG, and the like), and or according to genre (e.g. music or video);

[0089] 2) Further sub classification of content within file types or genres. For example a "music" category may be further divided into additional classifications such as "classical", "jazz", "pop", "internet radio" and the like;

[0090] 3) Additional information that is relevant to content links. For example, a song link may be displayed with information about the artist and or reviews and links to further information such as lyrics, artist concert schedule, and the like;

[0091] 4) A system to search for particular content on the web portal and or its affiliate links; and

[0092] 5) A system to retain user preference information for the purpose of customizing the web portal content according to the users preferences.

[0093] Content **10** from Internet **8** that may be used in the system disclosed here may be selected from a wide range of content selection web pages **22**, that may be formatted differently, and may be available from many different content creators and content aggregators. Content creators include for example the music labels such as firms whose business it is to create or commission to create, and own content. Content aggregators are firms whose business it is to collect certain types of content, such as digital music, for the purpose of enabling ease of selection by end users and distribution.

[0094] The capability for determining and aggregating the content objects **20** presented to a specific user on content selection web pages **22** are derived from content preferences selections provided by the user. For example, referring now to **FIG. 22 a** content preference selection web page **24** is shown with content selection check boxes **42** beside content selection labels **46** that describe a variety of content choices. In one embodiment, the user may use the mouse to click on the boxes next to desired content types, as shown in **FIG. 22**. Thereafter upon returning to content selection web page **22**, only content objects **20** that relate to the selected content types are displayed to the user. Functionally, content selection labels **46** are graphical representations of HTML links to actual content files, such as digital audio or digital video files. These links are organized and stored in a content link database on content link database server. The actual content files to which content selection labels **46** refer are stored at the content creator's or content aggregator's servers.

System Control Application

[0095] Referring now to **FIGS. 1 and 2**, a system control application **18** is comprised of two sub-applications, the core module **42** and the Graphical User Interface (hereafter GUI) module **46**. In one embodiment, core module **42** is implemented as a multithreaded Java application with instances running on both PC **34** and storage gateway **38**. A Windows version of a Java Virtual Machine (JVM) resides and runs on PC **34** and interprets core module **42** instructions for the Windows operating system. Likewise, a VxWorks version of JVM interprets core module **42** instructions to VxWorks. GUI module **46** may be implemented as a Win32 application and resides and runs on PC **34**. System control application **18** serves the function of managing the connection between content **10** and various servers on Internet **8**, and PC **34** and storage gateway **38**, and also manages the flow of information between PC **34** and storage gateway **38**, and client devices **78**.

[0096] Core module **42** and GUI module **46** access and modify the system control application database **96** using methods called over HTTP and expressed with XML grammar. System control application database **96** is a set of files that contain system parameters and data. For example, a track (song name) shown in audio device content editor **24** is referenced as a file name and a path designation a particular hard disk drive **30** on either of PC **34** or storage gateway **38**, in a listing in system control application database **96**. Actions that are taken, such as playing this file, are triggered by XML messages **74** sent from client devices **78** via LAN **70** or from GUI module **46** to core modules(s) **42** over HTTP.

[0097] The GUI module includes segments of the software application that run the GUI, including, but not limited to, the following functions:

[0098] 1. Displaying GUI elements on a computer display for view by the end user;

[0099] 2. Acknowledging user responses made via mouse and keyboard, or other pointing and interaction devices;

[0100] 3. Allowing for manipulation of the GUI elements such as:

[0101] a. drag and drop **28** of content objects **20**,

[0102] b. GUI button activations,

[0103] c. text entry, and

[0104] d. pull down menu and menu selections;

[0105] 4. Communication between GUI module **46** and core module **42**. The selections and control manipulations made by the end user are communicated to core module **42** where they can be acted upon; and

[0106] 5. Launching of specific device content and control editors from a system console **16**, as shown initially in **FIG. 3**, described below.

[0107] Core module **42** includes the portion of the system control application **18** that acts on content and data **10** from Internet **8** and also processes commands contained in messages sent from client devices **78**, providing, but not limited to, the following functions:

[0108] 1. Communication links:

[0109] a. Accessing content **10** on Internet **8** at a prescribed location as determined by user inputs into the GUI content editors such as audio device content editor **24** and Internet clock content editor **40**,

[0110] b. Accessing and communicating with GUI module **46**, and

[0111] c. Accessing and communicating with client devices **78**;

[0112] 2. Managing the caching (local storage) of content **10** from Internet **8** or otherwise digital content files;

[0113] 3. Streaming of content **10** from Internet **8** to client devices **78** connected to PC **34** and storage gateway **38** via LAN **70**:

[0114] a. Managing and routing streaming digital content **10** from Internet **8** to client devices **78**,and

[0115] b. Managing and routing streams of cached digital content **10** files on storage gateway **38** or PC **34** to the client devices **78**;

[0116] 4. Scheduling—time-based automation of the accessing, caching, and streaming of content **10** from Internet **8** at times prescribed by the user or at times derived by direction given by the user through the GUI content editors such as audio device content editor **24** and Internet clock content editor **40**. The scheduling function accesses time and date inputs associated with actions stored in system control application database **96** by GUI module. The scheduling function periodically compares these time and date entries with the current state of PC's **34** or storage gateway's **38** internal timer. When there is a match, the action is taken;

[0117] 5. Managing user responses at client devices **78**—messages are sent from client devices **78** to core module **42**, based on button activations at client devices **78**;

[0118] 6. Network Address Translation (NAT) and routing—certain client devices **78** must be connected to the Internet **8** in real time. Core module **42** acts to connect messages and streams from client devices **78** to Internet **8**, and from Internet **8** to the client devices **78**;

[0119] 7. Client device **78** Application/Software Delivery—Client device **78** application code can be stored at PC **34** or storage gateway **38** and delivered to client devices **78** on an as-needed basis. For example, if the network device is audio playback device **86** that must be able to decode a variety of different encoded audio streams, then a specific CODEC (sent as a BLOB—binary large object) can be delivered to audio playback device **86** via LAN **70** and installed into memory immediately before a content stream requiring that specific CODEC. Many different types of applications can be delivered just-in-time to client devices **78**. The advantage of this feature is that is requires for example audio playback device **86** to have smaller quantities of non-volatile

(flash) memory and smaller quantities of volatile (SDRAM) memory. Reprogramming or modifying the firmware at client devices **78** is also made easier since the software is accessible at PC **34** or storage gateway **38**;

[**0120**] 8. Transcoding—Certain types of content will be received at PC **34** or storage gateway **38**, decoded, re-encoded using a different CODEC at PC **34**, and then streamed to client devices **78**;

[**0121**] 9. Auto-discovery—Client devices **78** connected to PC **34** via LAN **70** will automatically appear as a specific client device control bar **26** on console **16** located on PC **34** desktop **12**. One or more client device control bars **26** constitute console **16**, shown in **FIG. 3** through **FIG. 11**;

[**0122**] 10. Message Transactions—text or other content or data from the Internet **8** can be transferred and presented on display **170** and display **132** client devices **78**;

[**0123**] 11. Tag servicing—when a tag button **128** or tag button **188** is pressed on one of client devices **78**, time, data, and information pertaining to currently playing content is aggregated into a message and sent to tag storage and processing server. Tag processing services included in core module **42** acquire information that is included in the message. Tagging is described in greater detail later in this document. Tag servicing includes a function where core module **42** periodically accesses a specific location on Internet **8** to acquire and store an accurate time and date;

[**0124**] 12. Synchronization—Data, such as user data and related information, such as an accurate time and date, must be synchronized across the three platforms (web, device, and local server). Core module **42** time and date data is thus synchronized with an external (absolute) standard; and

[**0125**] 13. Mirroring—Users can specify that content selections they make using the device content editors are to be mirrored at various other devices. For example, a user may have audio playback device **86** and a car caching and playback device. The user can specify that they want content **10** from Internet **8** that is cached on storage gateway **38** in the home to be mirrored exactly in the car-based caching device. The end user can thereby access all of the exact same content **10** in the same playlist structure in both the home and in the automobile.

[**0126**] System control application **18** and system control application database **96** are designed to function with a number of instances of core module **42** and GUI module **46** running concurrently on multiple PCs **34** and or storage gateways **38**, all connected by the same LAN **70**. It is anticipated that users will own and operate multiple PCs **34** in a single home for example, with different content **10** cached on each PC **34**. In one embodiment, the focus will be on a singular GUI module located and executed on a PC.

Client Devices

[**0127**] Client devices **78** may take many physical forms but the common attribute is that it client devices **78** are nodes on a LAN **70**, receiving digital content and data **10**, and instructions, from core module **42** subsystem of the system control application **18**. In an alternative embodiment, client devices **78** may send back XML message **74** control instructions and data from interaction or data that originates at client devices **78**. In one embodiment, client devices **78** may include a webpad **92**, an audio playback device **86**, an Internet clock **82**, a digital picture frame, and an automotive storage device.

[**0128**] Client devices depend on LAN **70** connectivity to provide the majority of their functionality. Different client devices **78** may range widely in the amount of integral memory capability. One embodiment described below shows an audio playback device **86** that is connected to a stereo receiver **114**. An alternative embodiment shows an Internet connected clock **82**. However, it should be clearly understood that the system is designed to function with a wide variety of networked client devices **78**. Audio playback device **86** and Internet clock **82** are described as examples of how the system functions.

[**0129**] **FIG. 12** illustrates an isometric view of one embodiment of a audio playback device **86**. The audio playback device **86** functionally connects digital audio content from a remote digital audio source to an conventional stereo system. Audio playback device **86** receives a stream of encoded audio content from PC **34** or storage gateway **38**, decodes it in real-time, and converts the uncompressed digital information into analog electrical signals.

[**0130**] In one embodiment, an audio playback device **86** may include a plastic injection-molded main housing **168** that contains a printed-circuit board (PCB). PCB electrically connects the components of a computer, and includes a microprocessor with dynamic memory (SDRAM) and programmable (flash) memory. Microprocessor in combination with dynamic memory executes instructions from its operating system and programming, referred to as the firmware **220** stored in programmable memory.

[**0131**] In one embodiment, the audio playback device **86** also includes a wireless network interface sub-system for communicating with PC **34** and storage gateway **38**, an infra-red (IR) control sub-system for processing IR commands from the IR remote control **90**, and a display **170** sub-system for presenting text and graphical information to the user.

[**0132**] In one embodiment, the audio playback device **86** also includes a digital-to-analog converter (DAC) for converting the uncompressed digital information into analog signals that are presented at the standard left and right RCA connectors, **240** and **244**.

[**0133**] In one embodiment, the audio playback device **86** firmware also includes a CODEC for decoding the audio file that is streamed to it from PC **34** or storage gateway **38**.

[**0134**] In one embodiment, remote control **90** can be attached to audio playback device **86** front bezel **164**, as shown in **FIG. 12**. **FIG. 20** illustrates an alternative embodiment of the audio playback device with a remote control **90** removed. **FIG. 19** is a block diagram showing how left analog output **240** and right analog output **244** included in audio content playback device **86** are connected respectively to the left line input **248** and right line input **252** on existing stereo receiver **114**. Stereo receiver **114** functions in the

conventional way, pre-amplifying and amplifying the audio signals and delivering them to the left speaker **272** and the right speaker **276**. As shown in **FIG. 19**, audio playback device **86** also includes a terrestrial broadcast tuner subsystem for tuning local AM and FM broadcast radio.

[**0135**] In one embodiment, the audio playback device **86** remote control **90** includes button controls for the following functions: Power button **196**—for powering the device on and off; Source/User button **204**—for selecting the user (owner of playlists and corresponding tracks) or for selecting storage gateway **38**, PCs **34**, or terrestrial broadcast, from which content **10** from Internet **8** or other terrestrial content will be delivered; Playlist forward button **176** and playlist back button **172**—for advancing through and selecting playlists; Track forward button **184** and track backward button **180**—for advancing through and selecting tracks for playback; Play/Pause button **192**—for starting and pausing (stopping at point in the middle of a playback of an audio file); Stop button **200**—for stopping playback of audio content; Tag button **188**—for triggering the transmission of information about a currently playing track (file, Internet **8** stream, or terrestrial broadcast) back through the system for delivery to the end user on a website or for delivery to the content creator or content originator; User-defined button **206**—This button may be associated with a variety of functions as selected by the user using the audio playback device setup GUI.

[**0136**] The text descriptors associated with the playlists and associated tracks are sent to audio playback device **86** when requests are made by button activations. For example, if the user activates forward playlist button **176**, the text string for the next playlist after the one that is currently being played is sent to audio playback device **86** via LAN **70**, is processed, and the text is displayed on display **170**. Likewise if forward-track button **184** is activated, the text string that is the name of the next sequential file from the current playlist stored in system control application database **96** located on storage gateway **38** or PC **34**, is sent by core module **42** to audio playback device **86**, where the text string is displayed on display **170**. If play button **192** is then activated, the currently playing track is halted and the track that is being displayed is sent, decoded, and played through the stereo system. The functional interface to the user of audio playback device **86** is similar to that found on a typical CD changer, where the CD represents the playlist, and the tracks on the CD represent the tracks in the playlist.

[**0137**] **FIG. 13** illustrates an isometric view of one embodiment of an Internet clock **82**. Internet clock **82** includes a plastic injection-molded main housing **122** with a microprocessor, dynamic memory, non-volatile memory, TFT display **132**, and operating system and firmware programming. In one embodiment, the display **132** on the Internet clock **82** is a large TFT graphics LCD, capable of showing images with 8-bit color. The control buttons or dials on Internet clock **82** may include the following:

[**0138**] 1. The Softkey buttons **124***a, b, c, d*, and *e*, along-side display **132** that are labeled by graphics on display **132**. Softkey buttons **124***a-e* can be used as presets to allow the user to jump to content presentations that are associated with each button by a GUI pull-down menu **52** on Internet clock content editor **40**, as shown in **FIG. 11**.

[**0139**] 2. Volume dial

[**0140**] 3. Snooze button **120** (on/off)

[**0141**] 4. Source select (terrestrial radio, Internet **8** content)

[**0142**] 5. The Tag Button **128**—for triggering the transmission of information about a currently playing track (file, Internet **8** stream, or terrestrial broadcast) back through the system for presentation to the end user on tag aggregation web page **56**, or for delivery to the content creator or content originator.

[**0143**] Internet clock **82** includes microprocessor and memory sufficient to receive and decode a full-motion video stream. Internet clock **82** also contains an integral sound system consisting of an amplifier and speakers **136**. Therefore Internet clock **82** is capable of presenting audio, video, and interactive multimedia. The digital electronics and packaging technology for such a devices is well known in the consumer electronics industry, so it will not be described in greater detail.

Three Function Modes of the System

[**0144**] In one embodiment, there are three functional modes: (1) setup, (2) real-time user controlled content/data delivery, and (3) automatic content/data delivery.

[**0145**] The setup functions provide the user with the ability to organize and manage content that is to be sent to a device. Content **10** may be stored or generated on Internet **8**, or may exist on a local storage device, such on the PC's **34** hard disk drive **30**, or on storage gateway **38**. In one embodiment, this content is organized and managed with the use of device content editors that are an aspect of GUI module **46** of system control application **18**.

[**0146**] A content editor is a part of GUI module **46** and may be used for managing and manipulating content **10** that will be sent to networked client device **78**. In one embodiment, an audio device content editor **24** is used to program and control content **10** for audio playback device **86**. In an alternative embodiment, an Internet clock content editor **40** is used to program and control content for Internet clock **82**. Content editors may be launched from console **16**. This is explained below.

[**0147**] Audio device content editor **24** provides the user with the ability to group audio files (tracks) into user-defined playlists, which are text association that contains a list of and paths to audio files or the URLs or IP addresses of audio streams, and are stored in system control application database **96**. For example, a user may create a playlist called "Classical Music" that contains ten Beethoven symphonies. A common type of audio file format is the MP3 (MPEG layer 3) format. Certain tracks such as MP3 music files are stored on hard disk drive **30** on PC **34**, while other tracks such as streamed Internet **8** radio, are stored as URLS or IP addresses. Streamed media can be in a variety of formats. A popular format is in the Windows Media format, created by Microsoft Corporation. In on embodiment, the audio device content editor **24** capability includes, but is not limited to, the following functionality:

[**0148**] 1. Display playlists

[**0149**] 2. Display tracks in a playlist

[0150] 3. Create a new playlist

[0151] 4. Delete a playlist and its associated tracks

[0152] 5. Add a track to a playlist

[0153] 6. Reorder playlists (accomplished by dragging and dropping the playlists in the GUI window frame)

[0154] 7. Delete a track from a playlist (highlight the track, activate the "delete" button)

[0155] 8. Reorder tracks in a playlist (this is accomplished by dragging and dropping the tracks in the playlist editor).

[0156] In one embodiment, the audio device content editor also includes a function such that when a CD-ROM is loaded into the PC CD-ROM drive, the audio content on the CD-ROM that is in the PCM format can be automatically transcoded into MP3 files and stored on the PC hard disk drive. This function can be turned on or off by the user in a preference interface box. The interaction between audio device content editor **24** and the other elements of the system will be discussed later.

[0157] In one embodiment, the Internet clock content editor **40** manages content **10** that is associated with a scheduled routine, such as a wakeup routine. Internet clock content editor **40** allows the user to associate content **10** such as audio or video files (stored on the user's hard disk drive **30** or streamed over Internet **8**) with an associated time and date. A set of content selections for the one-week period shown on Internet clock content editor in **FIG. 8** is called a wake-up routine. For example, referring now to **FIG. 9**, the user can associate a pointer to a news stream from the Internet **8**, shown as "MSNBC" in the figure, to be triggered at 8am on Monday through Friday. This association is created by dragging and dropping **28** content object **20** from content selection web page **22**, to Internet clock content editor **40**. At the prescribed time, the scheduler function in core module **42** initiates the serving of content designated by content object **20**, to Internet clock **82**, where it is played or presented to the user to wake them up, or for other purposes where automatic triggering is required.

[0158] In one embodiment, the Internet clock content editor **40** capability includes, but is not limited to the following functionality:

[0159] 1. Display calendar (time, days, weeks, months, dates, and the like)

[0160] 2. Select and associate content with a time and date

[0161] 3. Add additional content to a pre-existing routine

[0162] 4. Delete a content object from a routine

[0163] 5. Play audio files from an audio playlist (a playlist made using the audio device content editor)

[0164] 6. Schedule the display of graphics files, such as a series of digital pictures on Internet clock **82** when it is not executing a scheduled wake-up routine.

[0165] 7. Associate a content type or content module with one of the softkey buttons **124** located beside display **132**.

[0166] 8. Synchronize with a user's personal (digital) information manager (PIM), such as a personal digital assistant.

[0167] In one embodiment, both audio device content editor **24** and Internet clock content editor **40** are launched manually by the user by clicking on the associated client device control bar **26** on console **16**. **FIG. 3** shows PC desktop **12** with console **16** showing three client device control bars **26** (the PC's speakers here are not considered a client device although audio can be channeled to them). For example, considering **FIG. 3** as the initial state of launched and running system control application **18**, using the mouse the user would position the pointer on PC desktop **12** on client device control bar **26** that is associated with audio playback device **86** and activate the left mouse button. Audio device content editor **24** launches and the result is shown in **FIG. 4**, with audio device content editor **24** displayed on PC desktop **12**.

[0168] In an alternative embodiment, PC desktop **12** in **FIG. 4** also shows content selection web page **22**. Content selection web page **22** can be launched in a number of ways. One method for launching content selection web page **22** is to activate the Content Guide button **30** located on the bottom of console **16** by using the mouse to place the pointer on top of Content Guide button **30**, and pressing and releasing the left mouse button. Another launching method is to have content selection web page **22**"bookmarked" (Netscape Navigator) in a browser, or added to a "favorites" list in a browser (Microsoft Internet Explorer).

[0169] The spherical icons on content selection web page **22** are content objects **20** that are dragged and dropped onto the audio device content editor **24** tracks window **34**. Using the mouse to control the pointer on PC desktop **12**, the user moves the pointer on top of content object **20**, depresses the left mouse button, and moves the pointer-content object **20** bundle to tracks window **34** of audio device content editor **24** (while continuing to depress the left mouse button). When the user releases the left mouse button, a text description of content object **20** appears in tracks window **34** of audio device content editor **24**.

[0170] **FIG. 5** shows that content object **20**"Top 40 Radio" has been dragged from content selection web page **22** to audio device content editor **24** tracks window **34**, with drag and drop path **28** depicted. The user would perform this drag and drop operation on content objects **20** for which playback at audio playback device **86** is desired. For example, the "Top 40 Radio" content object **20** represents the URL of an Internet **8** radio stream.

[0171] As shown in **FIG. 6**, the user can also add audio files to the playlists using a conventional Windows dialog box that allows the user to navigate to a specific subdirectory on PC **34**. This type of PC **34** file access is a well known function of PCs **34**. Audio device content editor **24** also provides the capability for the user to create playlists. This is accomplished by using the New List button **37**, shown as part of audio device content editor **24** in **FIG. 4** through **FIG. 7**. **FIG. 7** shows that a playlist creation text entry box **36** is launched when the user activates New List button **37**.

[0172] On the software action level, when a user creates or modifies a playlist by adding tracks such as described above using audio device content editor **24**, GUI module **46** modifies system control application database **96**, a file that contains the text names of playlists, the file names and paths of local content files, and URLs of streams, that the user has selected as tracks. A copy of system control application database **96** is stored on both the PC's hard disk drive and on the storage gateway's hard disk drive.

[0173] In one embodiment, a portion of the files that are set up by the user as tracks in playlists that are accessed at audio playback device **86** are stored on storage gateway **38**. In this scenario, the user can still access tracks stored on storage gateway **38** at audio playback device **86** if PC **34** has been shutdown. The system may also function with the some or all of the files that constitute the tracks listed in audio device content editor **24** stored on the PC **34**. The PC **34** must be booted and functioning for the user to access any files stored on PC **34**. Accessing those files at audio playback device **86** is discussed below.

[0174] **FIG. 8** shows an initial state for using the Internet clock content editor **40**. Internet clock content editor **40** is formatted as a calendar (with a time domain format), since Internet clock **82** will have varying content depending on the time of day or night. Internet clock content editor **40** is also launched from console **16** in the same way that audio device content editor **24** is launched. **FIG. 9** shows Internet clock content editor **40** after content object **20** has been dragged onto the editor window in the "Monday" slot. **FIG. 10** shows that the user has dragged content object **20**, expanding it across the weekly calendar slots, stopping on the "Friday" slot. Once content object **20** is dragged and placed onto Internet clock content editor **40**, content object **20** is referred to as an expandable content bar **48**. Expandable content bars **48** are dragged across the day sections of Internet clock content editor **40** by using the mouse to position the pointer on the right side of expandable content bars **48**, depressing the left mouse button, dragging across Internet clock content editor **40** (expandable content bar **48** will graphically elongate) while keeping the mouse button depressed. The mouse button can be released when expandable content bar **48** is dragged to the last day on which content **10** referred to by expandable content bar **48** is to be played. Again referring to **FIG. 10**, the result of this programming activity is that every day of the week between Monday and Friday, core module **42** will automatically send prescribed content **10** to Internet clock **82** at the time indicated on left hand side of Internet clock content editor **40**, or at the time that the user has set as the wake-up time at Internet clock **82**. Settings at Internet clock **82** take precedence over Internet clock content editor **40** settings.

[0175] In setup mode, GUI module **46** receives commands from the user via the GUI that is drawn on PC desktop **12**. The user's actions and decisions are recorded by device content editors such as Internet clock content editor **40** and audio device content editor **24** which include GUI module **46**, are encoded as digitally described messages, and are then communicated to and stored in system control application database **96** by core module **42**. In the preferred embodiment, where core module **42** exists as a JAVA software program on storage gateway **38**, content **10**, the playlists, and names of tracks and stream addresses, are stored on hard disk drive **30** at storage gateway **38**. PC **34** also contains a copy of system control application database **96**.

Real-time Mode

[0176] In real-time mode, the user can activate and control the delivery of content **10** that has been set-up in audio device content editor **24**, either at audio playback device **86**, or at PC **34**. In one embodiment where audio playback device **86** is connected to stereo receiver **114**, the user can access the playlist information on an interface at audio playback device **86**. **FIG. 12** shows that remote control **90** is used to access the source, playlist, and track (content object **20**) at audio playback device **86**. Display **170** included on audio playback device **86** displays text information according to the manipulations of the controls by the user. For example, when the user presses forward playlist button **176** on remote control **90**, an IR stream is transmitted from remote control **90** and is received by IR subsystem **104** on audio playback device **86**. This message is decoded by microprocessor in audio playback device **86** as a forward select button selection, and an XML message **74** is sent from audio playback device **86** to core module **42** requesting that a string of text that represents the next playlist title be sent via high-speed LAN **70** to audio playback device **86**. Core module **42** receives XML message **74** and sends the text string representing the next playlist to audio playback device **86**, via high-speed LAN **70**. Microprocessor **208** processes this XML message **74** and displays the text string on audio playback device **86** display **170**.

[0177] When play button **192** is pressed, again IR subsystem **104** triggers XML formatted message **74** to be sent to core module **42** stating that play button **192** was activated. Core module **42** determines the present file or stream listing on audio playback device **86** display **170**, and initiates a stream of that file or Internet **8** stream to audio playback device **86**.

[0178] In an alternative embodiment, client devices are controlled by using a device controller GUI on PC **34**. Device controllers are launched from console **16** by right clicking on client device control bar **26** on console **16** associated with the specific device that is to be controlled. **FIG. 15** shows the audio playback device controller **60** and **FIG. 16** shows the Internet clock device controller **88**. The function of a device controller is to remotely control networked client devices **78**, and to also allow for the setting of certain preferences and features for client devices **78**. Thus continuing with our previously mentioned examples, audio playback device controller **60** is used to directly control audio playback device **86**, such as to instruct audio playback device **86** to play, stop or pause on a particular track. Similarly Internet Clock controller **88** is used to directly control Internet Clock **82** such as to turn Internet clock on or off, or set the date or time, as shown in **FIG. 16**.

[0179] The following is a list of controls and features for audio playback device controller **60** for one embodiment: a play/pause button **80** (holding down play button causes the player to fast forward, playing brief samples of the audio file at muted volume); a stop button **76**; a track backward button **72**; a track forward button **84**; and a balance slider **94**.

[0180] The following is a list of controls for features on Internet clock controller **88** for one embodiment: ramp

display back light during wakeup routine (slowly increase the light of the display during the wakeup routine); ramp audio volume during wakeup routine (slowly increase the volume of the device during the wakeup routine; length of dwell time for snooze button (the length of time that Internet clock **82** is dormant after snooze button **120** is activated; deactivate snooze button **120** (no snoozing); and length of time for sleep mode (the length of time Internet clock **82** will play content **10** when activated at night while the user is falling asleep). The function controls now shown in **FIG. 16** are available on an additional menu accessed by activating "more" button **112**.

Automatic Mode, Playback

[**0181**] In one embodiment, in automatic mode, content **10** that the user has selected for playback in the content editor is sent automatically to the playback device, based on some prescribed time setting that was pre-set by the user. A scheduling function in core module **42** compares time inputs listed in system control application database **96** with the current state of PC **34** system timer. When a match occurs between a time input in system control application database **96** and the current state of PC **34** system timer, core module **42** initiates the delivery of content **10** to client device **78**. In the case where content **10** is a stream from a URL on Internet **8**, a connection is created by core module **42** between the streaming URL via broadband communication link **14**, through storage gateway **38**, and via LAN **70** to client device **78**.

[**0182**] Automatic Mode, Caching

[**0183**] In one embodiment, certain content objects **20** designate a location for file-based content **10** that changes on a regular basis. In this case, a specific file is a content object **20** instance that is cached on local PC **34** or storage gateway **38** and streamed to client device **78**. For example, content **10** for Internet clock **82** may include a digital audio file with news located on a server on Internet **8** that may be updated every four hours. If content object **20** instance is a file designation that is not local, the scheduling function in core module **42** will periodically check the file at its location on Internet **8** to see if the file has changed. It will do this by comparing the locally cached file's creation date and title, and other file information, with the file located on Internet **8**. If the file's creation date and/or title has changed, the new file will be downloaded and stored on PC **34** or storage gateway **38**, so that the latest file can be sent to client device **78** at the prescribed time. This is part of the scheduling function listed in core module **42** functions in **FIG. 2**.

[**0184**] Storage gateway **38** is an "always-on" device. Therefore, in one embodiment, the scheduling function running on core module **42** on storage gateway **38** may be set to automatically access and acquire content **10** on Internet **8** at times when wide area network bandwidth is less expensive, such as overnight or during midday. Core module **42** on storage gateway **38** may also limit data-rates at certain times to further optimize wide area network bandwidth usage. For example, core module **42** can be limited to download data-rate speeds of 200 Kbps during the hours of 4 pm to 10 pm, and allowed to download at the maximum broadband rate any other time. In one embodiment, this download optimization setting can be set by users, who may want access to bandwidth while they are home in the evening. In an alternative embodiment, it may be set by network operators. These data-rate control settings and times may be set using a network bandwidth optimization control GUI, accessible by user at PC **34** or by network operators remotely. The data-rate control settings and times are stored in system control application database **96**.

System-wide Functions—Tag Interactivity

[**0185**] Because LAN **70** technology is a two-way interconnection technology, responses from client devices **78**, in one embodiment, may be sent back through the system and processed and presented to the user and other interested entities at both PC **34** and on the web. **FIG. 12** shows tag button **188** on audio playback device **86**. **FIG. 13** shows tag button **128** on Internet clock **82**. During the playing of content **10**, activation of tag button **128** by the user results in a transmission of XML message **74** back through LAN **70** informing core module **42** that the tag button **128** was activated. Core module **42** then compiles and transmits tag XML message **74** to tag storage and processing server **138**. This process is described in **FIG. 21**. The information in core module **42** tag XML message **74** may include but is not limited to: metadata or meta-tags included in the file or stream (characters or images); the file name if content **10** is a file; the URL or IP address of the stream if content **10** is a stream; time; date; and user identifier.

[**0186**] The transmission of tag XML message **74** can have different results. **FIG. 14** shows that the information in the message formatted as a readable text message and presented to a user on a personal tag aggregation web page **56**. In this scenario, the user has signed up with an account and receives a password for entry into protected tag aggregation web page **56**.

[**0187**] For the tagging function, the core module **42** should have access to accurate time and date information. **FIG. 2** shows that core module **42** has a function that accesses a server on Internet **8** where accurate time and date data is available, and these quantities are stored locally by core module **42** in system control application database **96** and is updated relative to the internal time and date timer located internal to PC **34** or storage gateway **38** that stores and runs core module **42** aspect of system control application **18**.

Television as Output Device

[**0188**] An alternative embodiment of this system includes the TV as an output device for using GUI module **46** aspect of system control application **18**. In this embodiment, system control application **18** resides on a set-top box that includes the components and functionality of storage gateway **38**. Set-top boxes are available that include a DOCSIS cable modem as well as a CATV tuner, hard disk drive **30**, and microprocessor.

[**0189**] In this system, the TV can be used as the output device on which the device control GUIs are visually presented, and a set top box remote control with a cursor pointing function is the input device. The GUI images look and function similarly to those shown in **FIG. 3** through **FIG. 11**. Most set-top boxes already contain the circuitry and firmware to draw images on a TV screen (NTSC format), so GUI module **46** would be minimally modified to support the number of pixels on conventional TV screens.

[0190] In alternative embodiments, the system can also be operated whereby the system control application resides on the set-top box and the GUI module that runs on a PC. The set-top box and PC are connected via a LAN and the system control application and GUI module are functionally connected using the LAN. The database and content files.

Storage Gateway Peripheral

[0191] A storage gateway peripheral **134** is defined as a computer with a integral hard disk drive **30** and processing capability, and an integral wireless LAN transceiver **58** to provide LAN **70** connectivity, that is added to an existing gateway **150** device for the purpose of adding content **10** mass storage and serving capability. **FIG. 23** shows a network topology including PC **34**, a conventional gateway **150** that is a DOCSIS cable modem. Storage gateway peripheral **134** is connected to gateway **150** via a wired LAN connection, in this case Ethernet, that is included in all gateways **150**. Storage gateway peripheral **134** is always-on, and includes power management features such as the ability to power down hard disk drive **30**. Core module **42** is stored and runs on storage gateway peripheral **134**, thus all of the services and functions provided by a system using a storage gateway **38** are provided with the use of a storage gateway peripheral **134**.

GUI Content Editors on Storage Gateway or Gateway Storage Peripheral

[0192] In one embodiment, the content editors can be programmed and executed across the network as Java applications stored on storage gateways **38** or on a storage gateway peripheral **134** device. The advantage of this is that any computer with a display and input peripherals such as a keyboard and a mouse, and that has a Java Virtual Machine (JVM), would be a viable client device content programming, set-up, and control workstation. This embodiment could also be implemented so that it was entirely browser-based. A user could access the device content editors within a browser window, with the application running as a Java applet.

Digital Image Player and Sequence Editor

[0193] In one embodiment, another device that can exist as a client device in this platform is a digital picture frame. One implementation of digital picture frame functionality is to set up Internet clock **82** to present a timed sequence of digital images on LCD **132** when Internet clock **82** is not being used for presentation of other content **10**. In one embodiment, the Internet clock **82** may be set up to present digital images automatically. In an alternative embodiment, the Internet clock **82** may be set up to present digital images under direct control of the user.

[0194] In one embodiment, the user could attach a digital image to one of the softkey buttons located on Internet clock **82**. A separate GUI, the digital image editor **96** would be accessed via the left-mouse-click on Internet clock **82** client device control bar **26** located on console **16**. Launching this editor is similar to launching audio device content editor **24**, described previously. **FIG. 18** shows an example of digital image editor **96**. There is a frame into which the user can drag-and-drop image files, or the user can navigate to image files via a conventional dialog box, and add these image files to the frame. The frame would then show a small image of the actual file. The user can drag-and-drop these images to reorder them.

[0195] Alternatively, dedicated digital picture frame can be used to display digital images. Referring again to **FIG. 18**, digital image editor **96** is a GUI that is used to create a digital image playlist for such a device. Digital image editor **96** is launched by left-clicking on the "digital image player" client device control bar **26** on console **16**.

Digital Video Caching, Control, Playback, and Interactivity

[0196] In one embodiment, the system for providing content distribution, management, and interactivity for client devices **78** shown in **FIG. 1** may also be used to access, store, and serve digital video, such as movies, television (hereafter TV **162**) shows, and other video content. Users may make selections using online Internet **8** services accessed on a web site as per the systems disclosed herein. Digital video files, such as DVD movies that are encoded using the MPEG-2 format, are then downloaded and stored on user's PC **34**, storage gateway **38**, or storage gateway peripheral **134**.

[0197] In one embodiment the storage gateway system is a set-top cable box that includes a hard disk drive. The digital video files are then streamed to a client device **78** that is a TV **162**, or any other client device **78** that can decode and present digital video. For example, a PDA **164** such as an iPaq, manufactured by Compaq Computer Corporation of Houston, Tex., with a wireless LAN **70** capability and the ability to decode MPEG-2 video is a viable terminal client device **78**. The advantage of this system, as opposed to streaming digital video directly from a cable headend or DSL ISP is that it provides for more efficient use of network bandwidth. Digital video files are very large, potentially several giga-bytes (billions of bytes). The downloading of these large files can be spread out over a longer period of time than would be required if the digital video files are streamed and viewed in real-time. The digital video files can always be downloading during periods of inactivity on wide area broadband communications connection **14**. Additionally, the download data-rates can be controlled from the head-end based on the time of day. For example, core module **42** includes a data-rate control function described in this disclosure. The allowable data-rate can be reduced for peak times of wide area network usage, and can be increased during off-peak times.

[0198] The system for delivering video to a TV **162**, including the provision for second screen interactive services with a webpad **92**, will now be described in detail. Referring now to **FIG. 27**, the system includes a broadband gateway **94** connected to a PC **34** with a wireless LAN access point **54**, a TV **162** connected to a wireless LAN-to-NTSC (National Television Standards Committee) converter **158**, and a hand-held portable computing device such as a webpad **92**. A webpad **92** is defined as a PDA **164** or other tablet-based portable computing device that includes a wireless LAN communication **70** capability. Both the TV **162** in combination with the wireless LAN-to-NTSC converter **158** and webpad **92** with a wireless LAN capability constitute client devices **78** that may be connected to the system for providing content distribution, management, and interactiv-

ity for client devices **78** as shown in **FIG. 1**. The fundamental operation of the system involves both synchronized and un-synchronized wireless data communication **70** between the PC **34**, webpad **92** and wireless LAN-to-NTSC converter **158**/TV **162** combination.

Webpad with Integral LAN NIC

[**0199**] The webpad **92** that is included in this system is similar to many PDAs **164** that are currently available except that Webpad **92** includes an integral wireless LAN transceiver **58** integrated circuit and antenna **112**, as well as an IR transceiver subsystem **146**. **FIG. 29** shows that webpad also includes an LCD **400**, an attachable stylus **404** for using the stylus-based interface, control buttons **408**, and an IR transceiver **412**. The LCD **400** includes an integral backlight so that the display may be read in low light. Contained inside the housing is a printed circuit board that functionally connects the electronic components, including the microprocessor and memory chips that constitute the functional data-manipulating aspect of the device. In the embodiment shown in **FIG. 29**, the antenna **112** is located internal to the webpad **92**, mounted to the printed circuit board.

Add-on LAN Capability

[**0200**] Wireless capability can be added to existing PDAs **164** such as the iPaq. For example, a Compact Flash HomeRF wireless transceiver card, as well as the required software drivers, are available for the iPaq PDA **164**. **FIG. 30** shows an alternative embodiment of the webpad **92** aspect of the invention where a PDA **164** is adapted for wireless communication using a wireless LAN adapter module **166** that mechanically and electrically connects to the PDA **164**. See **FIG. 31**. The wireless LAN adapter module **166** connects electrically via the docking connector on the PDA **164**. Wireless LAN adapter module **166** includes a printed circuit board that functionally connects the microprocessor, DRAM and flash memory, a wireless LAN transceiver **58**, antenna, batteries, power conversion sub-system, and UART, as well as an IR transceiver subsystem. In this embodiment, the antenna is located internal to the wireless LAN adapter module **166**, mounted to the printed circuit board. The wireless LAN adapter module **166** also includes an audio DAC and an audio output jack **416** that is used to play back audio content sent from the PC **34**, such as an MP3 file, through earphones that connect to the wireless LAN adapter module **166**. Wireless LAN adapter module **166** establishes a communication link with the PDA **164** using a serial PPP connection, and also establishes a TCP/IP wireless LAN communication link **70** with the LAN. Firmware operates these connections and enables the wireless LAN adapter module **166** to transfer data between the PDA **164** and the LAN.

[**0201**] The PC **34** in combination with the cable modem **94** functions as a gateway storage system by acquiring, storing, distributing, and managing the content that will ultimately be sent to and displayed on the TV **162**. The PC **34** gains access to digital content in many ways. In one embodiment, the user may insert a Digital Video Disk (DVD) into a DVD drive integral to the PC **34**. The PC **34** is also connected to the Internet **8** and thus has access to a large amount of digital content on the Internet **8** such as MPEG-2 and MPEG-4 files, Flash animations, and the like. TV network stations may provide access to their programming through releases on the Internet **8**. Although, here the PC **34** is connected to the Internet **8** through a DOCSIS cable modem, any type of broadband connection **14** will provide the same results.

[**0202**] A Local Area Network (LAN) is established by connecting the PC **34** to a wireless LAN access point **54** that is functionally connected to the PC **34** via a USB **62** connection. LANs and wireless LANs and their functionality have been described in detail in previous embodiments.

Wireless LAN-to-NTSC Converter

[**0203**] The TV **162** is functionally connected to the storage gateway system via a wireless LAN-to-NTSC converter **158**. **FIG. 28** shows a block diagram of one embodiment of hardware components in the wireless LAN-to-NTSC converter **158**. **FIG. 31** shows an exploded view of the wireless LAN-to-NTSC converter **158**. Referring now to **FIG. 31**, the there is a top housing **528** and bottom housing **524**. There is also a printed circuit board **508** that contains the electronic components, including the microprocessor, memory chips, and wireless LAN transceiver, IR transceiver **560**, audio DAC, and a video DAC, that constitute the functional data-manipulating aspect of the device. In one embodiment, the antenna is located internal to the wireless LAN-to-NTSC converter **158**, integral to the printed circuit board **508** as is shown in **FIG. 31**. In another embodiment, an external antenna that is re-positionable, may be used. An optional display **556** may be included.

[**0204**] The software stored and executed in the wireless LAN-to-NTSC converter **158** includes a real-time operating system (RTOS), audio and video (MPEG-2) CODECs, TCP/IP network communication stack, a wireless LAN transceiver **58** driver, and command processing firmware for handling messages sent between the various components of the system for providing content distribution, management, and interactivity for client devices **78**. The wireless LAN-to-NTSC converter **158** receives IP-based packetized data send out by the storage gateway system and converts it into a format that is able to be displayed on the TV **162**. Specifically, it converts compressed digital video information into the NTSC standard. The NTSC standard defines the television video format used for broadcasts in the United States of America and is currently set at 525 lines of resolution per second and combines blue, red, and green signals with an FM frequency for audio. Through the use of the wireless LAN-to-NTSC converter **158**, the TV **162** can display content that is initially stored on the PC **34**.

[**0205**] In one embodiment, conversion of digital PC **34** data to common formats such as NTSC, or S-video for input into video playback and recording devices is the function provided by standalone DVD players. Additionally, many PCs **34** include combination CD-ROM/DVD drives and in combination with a video card, provide the capability to present the DVD output on a TV **162**. A wireless LAN-to-NTSC converter **158** is an application of this technology. Referring to **FIG. 35**, the data, in NTSC form, is then sent to the TV **162** input through a NTSC cable **520**. Power to the TV **162** may be supplied via a switched AC line **536** from the wireless LAN-to-NTSC converter **158** so that the system has the capability of turning the TV **162** on and off. There is software control of the switched AC line **536** to the TV **162**.

Using the TV Video System

[0206] There are three different methods for control of the system for providing content distribution, management, and interactivity of digital video by the end user. In one embodiment, the user may manipulate the system with software by using interfaces at the PC **34** directly. In an alternative embodiment, tthe user may operate a LAN TV remote control **170** that communicates via IR with the wireless LAN-to-NTSC converter **158**. In another alternative embodiment, the user may control the system via a webpad **92**.

[0207] In one embodiment, where the PC **34** is used as the control site for the system, a TV **162** content and control editor GUI is provided as a component of the GUI module aspect of the system control application **18**. The TV content and control editor is launched using the system console **16**, which includes an icon for the wireless LAN-to-NTSC converter **158**/TV **162** combination when it is present on the LAN. The TV **162** content and control editor is similar to the audio device controller, providing on-screen conventional controls to the end user, such as play, pause, stop, fast-forward, fast-backward, chapter skip ahead, chapter skip backward, and main menu.

[0208] **FIG. 32** shows where the LAN TV remote control **170** is used to control the system. LAN TV remote control **170** is designed to operate with the wireless LAN-to-NTSC converter **158**. LAN TV remote control **170** includes an IR transceiver subsystem. The controls included on the LAN TV remote control **170** are the conventional controls used for controlling DVD or video playback including play, pause, stop, fast-forward, fast-backward, chapter skip ahead, chapter skip backward, and main menu. General navigation controls are also included for interacting with other type of content. A tag button is also included on the LAN TV remote control **170**. The LAN TV remote control **170** could also be designed with an integral display for displaying content that is related and synchronized with content on the TV **162** that is received by conventional broadcast or through the wireless LAN-to-NTSC converter **158**.

[0209] In one embodiment, where the webpad **92** is the input device, the webpad **92** interacts with the system via the wireless LAN communication link **70** wireless LAN. Thus, the webpad **92** functions as a node on the wireless LAN. By using software on the webpad **92**, in conjunction with the system control application **18** on the PC **34** as well as access to the Internet **8**, the user is able to select the content that is to be transmitted to the TV **162**. Furthermore, the user can interact with the content on the TV **162** by operating the webpad **92**. For example, a user who is watching a website can manipulate the website by utilizing the webpad **92** to perform various functions such as scrolling, inputting text, or pushing buttons. An additional function on the webpad **92** would be the ability to tag chosen content so that the system control application **18** in conjunction with tag storage and processing server will aggregate a record of that content on a tag aggregation webpage **56** for subsequent viewing by the end user. The tagging function is provided as a software GUI tag button **420** on the webpad **92**. The tag button functionality could also be mapped to an existing control button **408** on the webpad **92**. The tagging process is described in detail in a previous embodiment.

[0210] In another embodiment, the webpad **92** is also used to control aspects of the TV **162** directly using existing onboard IR capabilities. Webpads **92** and PDAs **164** may include IR transceivers. Since most TVs **162** are designed to communicate with IR remote-controls, the webpad **92** can use its IR transceiver to communicate directly with the TV's **162** IR receiver in order to control aspects of the TV **162** such as channel selection or volume control. The specific IR configurations for individual TV **162** brands can be downloaded from the Internet **8** by the system control application **18** and sent to the webpad **92**. Thus, in effect, the webpad **92** can be used to replace the TV remote-control. The IR functions of the webpad **92** can further be controlled and programmed using the wireless LAN communication link **70** that exists between the webpad **92** and the PC **34** so that the PC **34** can effectively control the TV **162** through the IR transmissions from the webpad **92**.

[0211] The components described above form an integrated system that allows the user to gain access to digital video and audio content through the use of the system for providing content distribution, management, and interactivity for client devices. By using the PC **34** as a caching server for the TV **162**, the user has greater control over the content that is played on the TV **162**. Content can be chosen, accessed and stored from multiple reservoirs on the Internet **8** and can be played by the users. Furthermore, through the use of a webpad **92**, the user can conveniently control the content that is sent to the TV **162**, as well as interact with the material displayed on the TV **162**.

[0212] The following description is an example of how the PC **34** to TV **162** system can be used. The PC **34** downloads a digital movie news program through the Internet **8** during the night. The PC **34** stores the program until, at some time during the morning, the user requests to view the program by utilizing the webpad **92**. The PC **34** then sends the content to the TV **162** where it is played.

[0213] In an alternate embodiment, the user requests to view a web page by entering a URL address into the webpad **92**. The PC **34** sends the contents of the page to the TV **162** where it is displayed. The user uses the webpad **92** to continue to manipulate page content and browse the Internet **8** in real time.

[0214] Another use for this system is to provide content on the webpad **92** that is related or complementary to that which is playing on the TV **162**. The content playing on the TV **162** is referred to as primary content and the content that is related or complementary to the primary content is referred to as ancillary content.

[0215] Regardless of whether the primary content playing on the TV **162** is obtained through the wireless LAN-to-NTSC converter **158** or via other conventional inputs to the TV, such as a terrestrial antenna or a cable TV converter, a digital record of the currently playing content is available to and stored by, the system control application **18**. In the case where content is either stored locally at the PC **34** or whether it is streaming directly through the storage gateway system, the content and timing of delivery are being controlled by the system control application **18**. Therefore, the digital information such as content title and embedded meta-data are available.

[0216] In the case where the webpad **92** is used as a remote control, the status of the user's system is known. For example, if the user is watching a terrestrial broadcast or a

conventional cable TV broadcast, and uses the webpad **92** as a remote control to control the system, the control parameters such as broadcast or cable channel are transmitted by the webpad **92** to the system control application **18**. The user has also established an account with an associated Internet **8** server that is for example running the content link database server **130**. In this case, the user's geographic location is known. With this information, the currently playing content on a given terrestrial broadcast or cable TV channel can be determined by the system for providing content distribution, management, and interactivity for client devices.

Interactive TV Applications

[**0217**] With the ability to determine the currently playing content on the TV **162**, a wide variety of ancillary content types and services are possible. In one embodiment, ancillary content is pushed into and displayed on the webpad **92** in real-time. For example, if the primary content playing on the TV **162** is an advertisement for a automobile, the ancillary content that is automatically loaded into and displayed on the webpad **92** is a website for that particular automobile. Or for example if the currently playing primary content on the TV **162** is a popular TV show, ancillary content that is information pertaining to one of the actors is automatically loaded into and displayed by the webpad **92**.

[**0218**] The system control application **18** receives the information regarding the state of the system, sends this information to the content link database server **130**, and ancillary content is sent back to the system control application **18** which routes the ancillary content to the webpad **92**. In the case of where the user is viewing a conventional terrestrial broadcast, an additional function that is required by content link database server **130** is to identify the primary content based on matching the time and date of the viewing action with a lookup table of content that is being broadcast at the at time and date in the user's geographic location. Terrestrial broadcast information is made publicly available by broadcasters, for example through publications such as TV Guide.

TV or Stereo System with Alarm Clock Functionality

[**0219**] **FIG. 33** shows an embodiment of the invention used to perform the functions of an alarm clock, or for otherwise automatically triggering the operation of the system, that uses a TV **162** as the audio and video output device.

[**0220**] The system includes an alarm clock remote control **174** shown in **FIG. 35**. The purpose of alarm clock remote control **174** is to provide an alarm clock-like user interface to the system, that can be placed on a nightstand or otherwise operate in an ergonomically similar location as a conventional alarm clock. For example, the alarm clock remote control **174** may be located on a nightstand while the wireless LAN-to-NTSC converter **158** and TV **162** are located across the room.

[**0221**] Referring now to **FIG. 36**, the alarm clock remote control **174** includes a top housing **600** and bottom housing **604**. There is an optional LCD **616** that contains an integral backlight so that the display may be read in low light. The display **616** is used to show such information as the time, system settings, system status, and content titles. The plastic housing contains a printed circuit board **620**, microprocessor **624**, memory chips **628**, IR transceiver **640** and other electronic components that constitute the functional data-manipulating aspect of the device.

[**0222**] The alarm clock remote control **174** includes a set of interface control buttons **612** used to perform such functions as inputting a wake up time, tagging specific content that is presented on the TV **162**, or turning the TV **162** off for a specific time interval (snooze button **632**). In one embodiment, user interaction inputs into the alarm clock remote control **174** are transmitted to the wireless LAN-to-NTSC converter **158**, where they are processed and acted upon. For example, when the system is activated and content is streaming from the storage gateway system to the TV **162** and the user activates the snooze button **632** on the alarm clock remote control **174**, a message is sent to the wireless LAN-to-NTSC converter **158**, via the IR transceiver **640** subsystem, that the snooze button **632** has been activated. The wireless LAN-to-NTSC converter **158** in turn sends a message to the storage gateway system to halt the stream, via the wireless LAN communication link **70**. In another embodiment the connection between the alarm clock remote control **174** and the wireless LAN-to-NTSC converter **158** uses a 900 Mhz RF transmission system.

[**0223**] In an alternative embodiment the alarm clock remote control **174** includes a wireless LAN transceiver connection to the wireless LAN-to-NTSC converter, in place of or in addition to the IR transceiver. Here, the alarm clock remote control **174** is a node on the LAN and sends messages to the other devices such as the system control application **18**, wireless LAN-to-NTSC converter **158**, and the webpad **92**. **FIG. 34** shows a schematic of the system where webpad **92** is also a client device **78** on the system and may be used for programming and control purposes.

[**0224**] A system for programming content for the present embodiment is provided. The wireless LAN-to-NTSC converter **158**/TV **162** combination appears as an icon on the console **16** on the PC **34**. The Internet clock content editor **40** for the present embodiment can be launched from this console **16** icon and used to set up content for transmission to the wireless LAN-to-NTSC converter **158** and TV **162**, as described above. An Internet clock controller **88** and Internet clock content editor **40** also exists for the webpad **92** that can be used to set up services for the wireless LAN-to-NTSC converter **158**/TV **162** sub-system. For example, the user inputs a wake-up time into the interface at the PC **34**, webpad **92**, or alarm clock remote control **174**.

[**0225**] Each of the PC **34**, webpad **92**, and alarm clock remote control **174** include a communication link to the system control application **18**, therefore the wake-up time input is saved in the system control application database **96**. The wireless LAN-to-NTSC converter **158** is used to switch on the TV **162** at the specified time, for example, in order to wake up a person sleeping in the room. A switched AC power line **536** in the wireless LAN-to-NTSC converter **158** may be used to control the on/off function of the TV **162**. Alternatively, the TV **162** can be left continuously powered on and receive a blank screen signal from the wireless LAN-to-NTSC converter **158** when the system in inactive such as overnight.

Stereo as an Alarm Clock

[**0226**] **FIG. 37** shows an alternative embodiment of the invention where the player device is a stereo system rather

than a TV. In this embodiment, the audio playback device is similar to the one described in previous embodiments. In one embodiment, a stereo system is used to perform the functions of an alarm clock, or can be automatically triggered for other purposes. An audio playback device is connected to an existing stereo system as described in a previous embodiment. The audio playback device may include a software controlled switched AC power supply, so that the stereo system can be turned off and powered on when its use is required. The audio playback device is used to switch on the stereo at a specific time pre-determined by the user and the stereo can be used to play pre-selected audio content.

[**0227**] In an alternative embodiment, the PDA can be used to communicate with the system through an IR communication link only. In this scenario, the PDA would not have a wireless transceiver but would communicate with the system via an IR communication link to the HRF-to-NTSC converter or HRF-to Stereo signal converter. In this embodiment the converter includes an IR transceiver and the necessary circuitry for receiving and interpreting IR data transmissions.

[**0228**] Similarly, an embodiment of the alarm clock control module includes an IR communication link to the HRF-to-NTSC converter or HRF-to-Stereo signal converter, rather than an HRF communication link.

Alternative Embodiments

[**0229**] The system for providing content distribution, management, and interactivity for client devices **78** has several permutations that have not yet been explicitly mentioned. For example. some, but not including all. permutations that are implied are the following: the system can be wholly controlled through the PC **34** and can be used without the use of the webpad **92**; the system can include numerous player client devices **78** on the LAN such as several TVs **162** and, or several stereos **114** and, or several alarm clock remote controls **174**.

[**0230**] **FIG. 38** shows a system for providing content distribution, management, and interactivity for client devices **78** where the storage gateway system is a digital cable set-top box **154** with a hard disk drive **30**. In this embodiment, one TV **162** is connected directly to the set-top box **154** via the conventional NTSC output. Subsequent TVs **162** as well as webpads **92** and other devices may be connected via wireless or wired LAN communications links **70**. The system control application **18** runs on the set-top box **154** and operates with the TV **162** that is directly connected as a client device **78** so that user interactions on any of the user interactions devices mentioned above are processed accordingly. For example, the second-screen interactive TV **162** service that is described above functions on the system shown in **FIG. 38**.

Automated PC

[**0231**] In one embodiment, the system for providing content and other information services to client devices can be implemented with just a PC **34**. System control application **18** resides on hard disk drive **30** on PC **34** and provides all of the functions and features including those provided by core module **42** and GUI module **46**. System control application database **96** also resides on PC **34**, as well as all cached content **10**. In this embodiment, LAN **70** is established by the use of a HomeRF wireless LAN access point **54**. The wireless LAN access point **54** is a self-contained device that communicates with PC **34** via the USB port. Wireless LAN access point **54** includes an RF network interface transceiver, and a microprocessor and firmware for managing the transfer of data between host PC **34**, and an antenna. There is also an antenna integrated into a plastic housing. Wireless LAN access point **54** gets its power from the USB connection. In one embodiment, the wireless LAN access point **54** could also be incorporated into an internal add-on bus card, such as a card that would attach to the PCI bus. Such peripheral bus cards are well known in the field of PC design. In the case of a bus card, there would be an external antenna.

[**0232**] The automated services function of core module **42**, whereby content **10** is automatically accessed, downloaded and cached on PC **34**, and whereby content **10** is automatically streamed to client devices **78**, is facilitated if PC **34** is always on, or if PC **34** can be automatically turned on (booted). PC **34** includes a Basic Input Output System (hereafter BIOS) for controlling the basic functions of the system. The BIOS may also be used to automate the booting of PC **34**. In the implementation whereby PC **34** boots automatically, system control application **18** includes software that can modify the BIOS software of PC **34** so that automatic pre-scheduled activation of PC **34** is enabled. Subsequent control of PC **34** to connect to the Internet **8** and perform operations, is also provided by the scheduling function in core module **42**.

[**0233**] The BIOS consists of a set of instructions and data that the microprocessor uses as part of its initial sequence of operation. These instructions are stored in a BIOS flash memory chip, which is a non-volatile type of memory chip, so that the instructions and data are retained when power to the computer is turned off. BIOS software and design, as well as reprogrammable flash memory technology, is well known in the PC industry and will not be described in detail here. The date and time that the computer uses for various purposes is a function that is controlled by the BIOS chip and interface. Typically, a PC motherboard includes a timer and date function that is backed up by a battery on the motherboard. The purpose of this system is so that when the computer is turned on, the operating system has access to accurate time and date information. Since the time and date (timer) function is always operating on a computer motherboard, and this system is connected to the BIOS, most BIOS systems include an automated wakeup function. This is a function that operates internal to the BIOS chip and can be activated or de-activated. If the automatic wake-up function is turned on and a specific time and date is entered and stored in the BIOS memory, a software function operating in the BIOS continually compares the current date and time with a designated wake-up time and function that is stored in memory. When the two times and dates match, a power-on command is given and PC **34** power-up sequence begins. The BIOS modification software automatically modifies the BIOS from the OS level, so that the user doesn't have to access the BIOS during the early phase of PC **34** boot.

[**0234**] Another function that is performed by the BIOS modification software is to modify the internal settings of PC **34** that control the power saving modes and control parameters which include parameters such as when the PC display is turned off, and when drives are spun down while

PC **34** is operating. The BIOS modification software allows for the "always-on" operation of PC **34**. In this case, the PC can be put into a low-power mode with monitor off and with the drive not spinning. Control of various power saving modes is also provided for users at the operating system level. The Advanced Configuration and Power Interface is a set of functions that provide control of PC **34** power usage, allowing the computer to be put into various suspend states, as well as spinning down drives and other functions. Power control functions in core module **42** modify ACPI settings, providing for quiet, low power operation of PC **34**.

[**0235**] PC **34** exists in the user's home, or other location where there is a desire for the ability to play Internet content or data **10**, including multimedia content, on one or more standalone devices apart from PC **34**. There is a setup activity for the system, requiring several one-time actions by the user. Then there is an actual use scenario. Referring now to **FIG. 5**, first, the setup activity will be described.

[**0236**] PC **34** is booted (started up) and a connection to Internet **8** is made. This is achieved by using the dial-up networking function that is standard on any machine with the Windows operating system. This connection could also be an always-on DSL, ISDN, or cable modem connection. Once a connection is made to Internet **8**, browser software is started and the user would navigate to a specific information appliance setup website associated with the system and the devices. This website would have a particular URL that would be supplied in the instruction materials that come with wireless LAN access point **54** or client device **78**. Using the browser, or other interface to the website server, the user would navigate to a setup page at the website that asks for a serial number of client device **78** that the user is planning to use. The user would then connect the USB cable on wireless LAN access point **54** to the USB port on PC **34**. The user would then enter this serial number, which is included in the documentation that is included with the end-user device. The online application has a database of these serial numbers that are associated with each individual manufactured client device **78** (including both wireless LAN access point **54** and client device **78**) that are distributed into the market. Once a match is made between the serial number that the user entered at the website, and a serial number that is included in the online database, an online application automatically begins downloading and installing system control application **18** to user's PC **34**. This software is installed on user's PC **34** and provides the following functions.

[**0237**] A scheduling function determines when PC **34** automatically connects to the Internet. If PC **34** is running in a power saving mode, such as with the display turned off and with the drives not spinning, the scheduling function will initially act to take the PC **34** out of power saving mode, and then to automatically connect to the Internet using the Dialup Action. Many users will already have PC **34** set up to dial up to an Internet service provider (ISP). In this case, the dialup networking function that already exists will be used. If the user does not have this installed on PC **34**, an application is included that will install the correct dialup information, so that a connection is made to the correct ISP and server.

[**0238**] At 12 am, PC **34** automatically boots and dials up the ISP. An Internet **8** connection is established. PC **34** automatically connects to the web server associated with client device **78**. Here the user's account is referenced as well as the identifying serial number of user's client device **78**. A volume of content **10** that the user specified to be automatically delivered to Internet clock **82** is downloaded to user's PC **34**, where it is stored on the PC **34** hard disk drive **30**. After the content has completely downloaded, PC **34** terminates the connection to the ISP, and shuts down. This occurs at 1:30 am. At this point PC **34** may also be kept on, as selected by the user during the configuration of the system.

[**0239**] At 5:30 am, the PC again automatically boots. The wireless communication system establishes a connection to Internet clock **82**. At 6:00 am, the specified wake up time of the user, PC **34** initiates the transfer of content to Internet clock **82**. This content is presented to the user as sound and images, waking up the user.

Web-based System Control Application

[**0240**] In an alternative embodiment there is a website that is accessed for the purpose of downloading and setting up the system control application **18** on PC **34**, and for controlling the content that is sent to client devices **78**, and for controlling the features of client devices **78**. This website is accessible from any computer that is connected to the Internet **8** and includes a browser. The website also contains a database for storing the content preferences of the user or owner of client devices **78**. These content preferences include pointers to the locations of the content entities, such as audio files, video files, or text files, on Internet **8** that the user had specified to be played on client device **78**. The website could also include a server-based version of system control application **18** that would retrieve and store content and data according to user preferences on the web.

[**0241**] **FIG. 39** shows a web-page that is used to choose a particular device that is to be controlled or set-up. The web-page in **FIG. 39** is equivalent in function to console **16**. **FIG. 40** shows a web-page that is displayed when the "iclock" icon on **FIG. 39** is selected. **FIG. 41** is a calendar-based GUI application that is a java applet and is launched when the "first time" button is selected on the web-page on **FIG. 42**. **FIG. 42** shows the result of content selections made based on the content menu.

Webpad Client Device

[**0242**] In one embodiment, client device **78** is a portable computing device referred to as a webpad **92**, able to be carried around the house or within range of LAN **70**. Webpad **92** includes a set of rechargeable batteries and a battery recharging system. There is also a dock into which the webpad **92** is placed during times when it is not used. When it is docked, there are electrical contacts in the dock that make contact with the electrical contacts on webpad **92** and the batteries are recharged. Webpad **92** also has stored in its non-volatile memory an identifying serial number, which is used to identify webpad **92** on the wireless network, and is also used to coordinate the content that is specified by the user to be sent to and cached at the local PC **34**, and ultimately sent wirelessly to webpad **92**. For example, users can access cached content on PC **34** or storage gateway **38** such as digital, searchable Yellow Pages or White Pages, and other reference databases. Additionally, webpad **92** can

access the Internet **8** via PC **34** or storage gateway **38**, utilizing PC **34** or storage gateway **38** as a router.

[**0243**] Furthermore, webpad **92** can be used to control other client devices **78**. For example, a webpad **92** version of audio device content editor and audio device controller GUI allow the user to access playlists and tracks, and control audio playback device **86** in real time while away from PC **34**. XML messages **74** are sent from webpad **92** to PC **34** or storage gateway **38**, processed by core module **42**, and appropriate XML messages are sent to audio playback device **86**. An embodiment of the audio device content editor and audio device controller that is implemented as a webpage and runs in a browser, using HTTP and HTML, can be used to operate the audio playback device on the PDA. Browsers are available for PDAs.

Alternative Embodiments

[**0244**] LAN **70** could be implemented with a number of different of wireless systems such as 802.11b, 802.11a, or Bluetooth™. The wireless communication system could be a 900 Mhz system used on many cordless phones. The system could be implemented with a phone line network system where the house wiring is used as the network physical layer for communication between PC **34** and client devices **78**. The system could be implemented using an AC power line networking technology that uses the AC wiring in the home as the network physical layer. It should be noted also, that the system will work with any type of connection to the internet, including other broadband technologies such as DSL or fixed wireless, or a dialup modem connection.

[**0245**] A phone that includes a microprocessor, memory, and network interface is also a client device. The content **10** that would be transferred to it would be the digital address books, such as those that are a part of PDA databases and desktop organizer software. The phone numbers from these personal information managers, and other relevant phone numbers could be downloaded from the web and cached at the PC, and subsequently transferred to the phone database, so that dialing can be made much easier.

[**0246**] A system and a method for providing content, management and interactivity for client devices have been described. Although the present invention is described herein with reference to specific embodiments, many modifications and variations therein will readily occur to those with ordinary skill in the art. Accordingly, all such variations and modifications are included within the intended scope of the present invention as defined by the following claims.

What is claimed is:

1. A method comprising:

automatically obtaining and transferring digital data based on user specified preferences from a wide area network to a computer; and

automatically sending the digital data from the computer to a client device using a wireless data transceiver.

2. The method of claim 1 further comprising manipulating the digital data on the client device from the computer.

3. The method of claim 2 wherein manipulating the digital data on the client device from the computer includes sending signals to the computer via a remote controller.

4. The method of claim 1 further comprising manipulating the digital data on the client device from a website.

5. The method of claim 1 further comprising manipulating the digital data on the client device from a portable electronic device.

6. The method of claim 1 further comprising retaining user specified preferences in a database on the computer.

7. The method of claim 1 further comprising tagging digital content to aggregate a record of that content on a tag aggregation webpage.

8. The method of claim 1 further comprising identifying the client device by a specified serial number.

9. A machine-readable storage medium tangibly embodying a sequence of instructions executable by the machine to perform a method, the method comprising:

automatically obtaining and transferring digital data based on user specified preferences from a wide area network to a computer; and

automatically sending the digital data from the computer to a client device using a wireless data transceiver.

10. A method comprising:

automatically obtaining and transferring digital data based on user specified preferences from a wide area network to a computer; and

automatically sending the digital data from the computer to a television using a wireless data transceiver.

11. The method of claim 10 further comprising converting the digital data to a format capable of being displayed on the television.

12. The method of claim 10 further comprising manipulating the digital data on the television from the computer.

13. The method of claim 12 wherein manipulating the digital data on the television from the computer includes sending signals to the computer via a remote controller.

14. The method of claim 10 further comprising manipulating the digital data on the television from a website.

15. The method of claim 10 further comprising manipulating the digital data on the television from a portable electronic device.

16. The method of claim 10 further comprising storing user specified preferences in a database on the computer.

17. The method of claim 10 further comprising tagging digital content to aggregate a record of that content on a tag aggregation webpage.

18. The method of claim 10 further comprising identifying the television by a specified serial number.

19. A machine-readable storage medium tangibly embodying a sequence of instructions executable by the machine to perform a method, the method comprising:

automatically obtaining and transferring digital data based on user specified preferences from a wide area network to a computer; and

automatically sending the digital data from the computer to a television using a wireless data transceiver.

20. A method comprising:

automatically obtaining and transferring digital data based on user specified preferences from a wide area network to a computer;

turning on a television at a specified time based on the preferences; and

automatically sending the digital data to the television using a wireless data transceiver.

21. The method of claim 20 further comprising shutting the television off for a predetermined period of time in response to a remote controller sending a signal to the computer.

22. The method of claim 21 wherein shutting the television off includes stopping the sending of digital data to the television.

23. The method of claim 20 further comprising converting the digital data to a format capable of being displayed on the television.

24. The method of claim 20 further comprising manipulating the digital data on the television.

25. The method of claim 20 further comprising storing user specified preferences in a database on the computer.

26. A method comprising:

automatically obtaining and transferring digital data based on user specified preferences from a wide area network to a computer;

turning on an audio playback device at a specified time based on the preferences; and

automatically sending the digital data to the audio playback device using a wireless data transceiver.

27. The method of claim 26 further comprising shutting off the audio playback device for a predetermined period of time in response to a remote controller sending a signal to the computer.

28. The method of claim 27 wherein shutting off the audio playback device includes stopping the sending of digital data to the audio playback device.

29. The method of claim 26 further comprising converting the digital data to a format capable of being played on the audio playback device.

30. The method of claim 26 further comprising manipulating the digital data on the audio playback device.

31. The method of claim 26 further comprising storing user specified preferences in a database on the computer.

32. A method comprising:

determining a plurality of preferences based on primary digital data sent to a television;

automatically searching for related ancillary digital data on a wide area network based on the preferences;

receiving the related ancillary digital data to a computer; and

automatically sending the related ancillary digital data to a client device using a wireless data transceiver.

33. The method of claim 32 further comprising storing the ancillary digital content in a database on the computer.

34. The method of claim 32 further comprising tagging the ancillary digital content to aggregate a record of that content on a tag aggregation webpage.

35. The method of claim 32 further comprising manipulating the ancillary digital content on the client device.

36. The method of claim 32 further comprising obtaining new ancillary digital content in response to changing the primary content on the television.

* * * * *