IN THE UNITED STATES DISTRICT COURT
FOR THE EASTERN DISTRICT OF TEXAS
MARSHALL DIVISION

SPORTSCASTR INC. (d/b/a PANDA INTERACTIVE), *Plaintiff*, v. GENIUS SPORTS LTD., *Defendant*.	Civil Action No. 2:23-cv-471-JRG

DECLARATION OF DR. STEPHEN WICKER IN SUPPORT OF
DEFENDANT'S CLAIM CONSTRUCTION BRIEF

Dated: September 13, 2024

Respectfully submitted,

Stephen B. Wicker, Ph.D.

CONTENTS

I. Qualifications, Experience, and Publications 1

II. Scope of This Declaration 4

III. Materials Considered 7

IV. Legal Standards 7

V. Overview of Asserted Patents 12

A. The ’697 Patent 12

B. The ’687, ’218, and ’088 Patents 16

VI. Person of Ordinary Skill in the Art (“POSA”) 19

VII. Analysis of Disputed Claim Terms 20

A. “socket” 20

B. “event socket” 27

C. “socket server” 30

D. Means-Plus-Function Terms 32

1. “Means for Providing” Terms 34

2. “Means for Retrieving” Terms 46

3. “Means for Transmitting” Terms 55

4. “Means for Transmitting and Receiving” Terms 61

5. “Means for Updating” Terms 66

E. Client-by-Client Latency Mitigation Terms 72

F. Terms Lacking Antecedent Basis 77

I, Stephen Wicker, declare as follows:

1. My name is Stephen B. Wicker, Ph.D. I am Professor Emeritus of Electrical and Computer Engineering at Cornell University in Ithaca, New York.

2. I have been retained by Defendant Genius Sports, Ltd. ("Genius Sports") to provide opinions and analysis concerning the proper construction of certain terms that appear in the asserted claims of U.S. Patent Nos. 10,425,697 ("the '697 patent"), 10,805,687 ("the '687 patent"), 11,039,218 ("the '218 patent"), and 11,871,088 ("the '088 patent") (collectively, "the Asserted Patents").

3. My opinions are set forth below and are based on information presently available to me. I reserve the right to supplement these opinions in response to information provided or opinions offered by any other party in this proceeding.

I. QUALIFICATIONS, EXPERIENCE, AND PUBLICATIONS

4. A copy of my *curriculum vitae* (CV) is attached as Exhibit A. It includes information pertaining to my education, experience, and qualifications.

5. I earned my Bachelor of Science degree in Electrical Engineering from the University of Virginia in 1982. In 1983, I earned a Master of Science degree in Electrical Engineering from Purdue University, and in 1987, I earned a Ph.D. in Electrical Engineering from the University of Southern California. My doctoral studies focused on the theory of sequences and error control codes for digital communication systems.

6. In 1982–1983, I worked for the Network Architecture Research Group of Bell Laboratories, in Columbus, Ohio. While with Bell Laboratories, I worked on digital switching systems for the messages that control the telephone network.

7. From August 1983 through September 1987, I was a System Engineer for the Space and Communications Group of the Hughes Aircraft Company, in El Segundo, California. During

this time my primary focus was on the design and development of communication payloads for commercial, military, and NASA spacecraft. My work at Hughes included acting as the Principal System Engineer for new business in advanced satellite systems.

8. From September 1987 through June 1996, I was a member of the faculty of the School of Electrical and Computer Engineering at Georgia Tech.

9. From July 1, 1996, to February 29, 2024, I was a member of the faculty of the School of Electrical and Computer Engineering at Cornell University, where I taught and conducted research in wired and wireless information networks, digital telephony, information theory, and security. Since that time, I have continued to serve Cornell as an Emeritus faculty member, conducting research, advising students and faculty, and giving occasional lectures. Over my time at Georgia Tech and Cornell, I have supervised forty-four Ph.D. students.

10. I have consulted extensively with Motorola, MTel, Lockheed, Integrated Device Technologies, Unisys, Texas Instruments, and other corporations to develop advanced technologies for their products.

11. My current research focuses on wireless and wired information networks, with an emphasis on network security and privacy. I have been particularly focused on client-facing systems such as cellular technology and content distribution networks. I am particularly interested in the security and privacy issues that arise in streaming systems.

12. I have written and/or edited six books and roughly 250 journal and conference papers, most of which focus on digital communication systems and information networks. I am the author of *Cellular Convergence and the Death of Privacy* (Oxford University Press, 2013). I am also the author of *Error Control Systems for Digital Communications and Storage* (Prentice Hall, 1995), which has been adopted as a text for courses in over sixty universities in fourteen

countries. I am the author of *Reed-Solomon Codes and Their Applications*, published in 1994 by the IEEE Press; *Turbo Coding*, published in November 1998 by Kluwer Academic Press; and *Fundamentals of Codes, Graphs, and Iterative Decoding*, published in 2002 by Kluwer Academic Press.

13. My journal publications include "Ad Blockers: Technology, Ethics, and a Serious Difference of Opinion," *Communications of the ACM*, October 2017 (with K. Karlsson) and "Digital Rights Management: The Cost to Consumers," in *Proceedings of the IEEE*, vol.103, no.5, pp.726–33, May 2015 (with A.S. Kubesch).

14. I have also contributed chapters to several books, including "Privacy-Aware Design for the Monitoring, Control, and Protection of Critical Infrastructure," in *Homeland Security Threats, Countermeasures, and Privacy Issues* (ed. Giorgio Franceschetti), Artech House, 2010. A complete list of my publications is contained in my curriculum vitae, a copy of which is attached as Exhibit A.

15. I am a named inventor on the following patents.

- Wicker, S.B., "*Private Overlay for Information Networks*", U.S. Patent No. 9,813,233, 7 November 2017 - assigned to Cornell University.

- Ober, C.K., O'Rourke, T.D., Spencer, M.G., Turner, J.N., Wicker, S.B., "*Flexible Substrate Sensor System for Environmental and Infrastructure Monitoring*", U.S. Patent No. 8,701,469, 22 April 2014 - assigned to Cornell University.

- Fontaine, F. and Wicker, S.B., "*Method and Apparatus for Turbo Decoding Block Codes*", U.S. Patent No 7,243,288, 10 July 2007 - assigned to Motorola Inc.

- Wicker, S.B. and Fine, T.L., "*Sensor-Assisted ALOHA Multiple Access*", U.S. Patent No. 6,404,750, 11 June 2002 - assigned to Cornell University.

- Wang, X.A. and Wicker, S. B., "*Artificial Neural Network Viterbi Decoding System and Method*," U.S. Patent No. 5,548,684, 20 August 1996 - assigned to Georgia Tech Research Corporation.

16. I have served as an Associate Editor for the *IEEE Transactions on Communications* and the *ACM Transactions on Sensor Networks*. I was twice elected to the Board of Governors of the IEEE Information Theory Society. I have also edited several special issues for a variety of journals and technical magazines, and served a three-year term on the Information Science and Technology Panel for the Defense Advanced Research Projects Agency (DARPA). The DARPA panel is responsible for technology assessment for the U.S. Department of Defense. My DARPA duties included leading a one-year study on wireless sensor networks.

17. In 2011, I was named a Fellow of the IEEE for contributions to wireless information systems. From 2005 to 2018, I served as the Cornell University Principal Investigator for the TRUST Science and Technology Center, a National Science Foundation center dedicated to the development of technologies for securing the nation's critical infrastructure.

18. In 2014, I briefed the staff of the National Economic Council at the White House on the subject of privacy aware designs for cellular and the smart grid.

19. I have taught communication system theory and design to thousands of students at Georgia Tech and Cornell over the past thirty-seven years. I have been the recipient of four Cornell University College of Engineering faculty teaching awards.

20. I am being compensated for my time spent on this matter at my usual and customary rate of $900 per hour, plus reasonable expenses. My compensation is not contingent upon the substance of my opinions, my testimony, or the outcome of this action. I have no financial interest in this case.

II. SCOPE OF THIS DECLARATION

21. I understand that Plaintiff SportsCastr Inc. (d/b/a PANDA Interactive) ("Plaintiff" or "PANDA") filed the present lawsuit against Genius Sports and alleges infringement of each of the Asserted Patents.

22. I have been asked to evaluate the following claim terms:

Term or Phrase	Claim(s)
"socket"	'697 Pat. cl. 1, 19, 23, 27; '687 Pat. cl. 1, 19, 23, 27; '218 Pat. cl. 1, 12, 16
"event socket"	'697 Pat. cl. 1, 2, 4–6, 9, 13, 14, 19–25; '687 Pat. cl. 1, 2, 4, 5, 7, 9, 13, 14, 19, 20, 22, 23, 25; '218 Pat. cl. 1–5, 7, 12, 13, 16, 19, 20
"socket server"	'697 Pat. cl. 1, 2, 4–6, 9, 13, 14, 19–25; '687 Pat. cl. 1, 2, 4, 5, 7, 9, 13, 14, 19–25; '218 Pat. cl. 1, 3, 4, 7, 10, 12, 15, 16; '088 Pat. cl. 1, 4, 5, 8, 13, 18, 24, 28–30
"means for providing the first copy to the first viewer client device via a first video communication channel"	'697 Pat. cl. 27, 30; '687 Pat. cl. 27, 30
"means for periodically retrieving, via the Internet and from an event information provider, first event information germane to a first live sporting event"	'697 Pat. cl. 27
"means for retrieving, via the Internet, first event information germane to a first live sporting event"	'687 Pat. cl. 27
"means for transmitting the first score information to at least the first viewer client device via a first event information communication channel that is different from the first video communication channel"	'697 Pat. cl. 27
"means for transmitting the first event information to at least the first viewer client device via a first event information communication channel that is different from the first video communication channel"	'687 Pat. cl. 27
"means for transmitting and receiving first chat information regarding the first live sporting event via at least one first chat/system event Internet communication channel that is different from the first video	'687 Pat. cl. 28

Term or Phrase	Claim(s)
communication channel and the first event information channel”	
“means for transmitting and receiving first chat information regarding the first live sporting event video-based commentary included in the first broadcaster’s live stream of digital content via at least one first chat/system event Internet communication channel that is different from the first video communication channel and the first event information communication channel”	’697 Pat. cl. 28
“means for updating the first score information and queueing an asynchronous message including the updated first score information for transmission on the first event information communication channel”	’697 Pat. cl. 29
“means for updating the first event information and queueing an asynchronous message including the updated first event information for transmission on the first event information communication channel”	’687 Pat. cl. 29
“provide a single synchronized update and mitigate client-by-client latency and/or synchronization issues”	’218 Pat. cl. 7
“the first digital content received at the first client device and the second client device is synchronized and client-by-client latency between the first client device and second client device to render the first event information is thereby mitigated or significantly reduced”	’088 Pat. cl. 1, 8
“video Internet communication channel”	’697 Pat. cl. 20, 22
“event information Internet communication channel”	’687 Pat. cl. 20, 22

23. I have been asked to offer my opinion on the meanings of these claim terms and to evaluate PANDA’s claim constructions and arguments regarding the same terms. I have also been

asked to consider certain of these claim terms and evaluate whether such terms are indefinite based on the legal principles summarized in Section IV, below.

III. MATERIALS CONSIDERED

24. In preparing this declaration, I have considered the Asserted Patents, their prosecution histories (a.k.a. file histories), the parties' claim construction disclosures, the extrinsic evidence cited therein, and all documents cited in this declaration. I have also relied on and considered my knowledge, training, and experience as an electrical and computer engineer over the past forty-plus years.

IV. LEGAL STANDARDS

25. I am not a lawyer and have no formal education in patent law. For the purposes of performing my analysis and forming my opinions, I have been informed by counsel of certain legal principles with respect to patent law and claim construction, discussed below. While reviewing materials and forming the opinions expressed in this declaration, I applied these legal principles and informed my opinions based on my understanding of the relevant law.

26. I understand that the claims of a patent define the purported invention, and the purpose of claim construction is to understand how a person of ordinary skill in the art ("POSA") would have understood disputed claim terms at the time of the purported inventions.

27. I understand that a POSA is a hypothetical person presumed to have the skill and experience of an ordinary worker in the field at the time of the alleged invention. I understand that there are multiple factors relevant to determining the level of ordinary skill in the pertinent art at the time of the alleged invention. These factors include: the education of active workers in the field, the sophistication of the technology, how quickly innovations are made, the types of problems encountered in the art, and the solutions to those problems identified in the prior art. In a given case, not every factor may be present, and one or more factors may predominate. I also

understand that the hypothetical POSA to which the claimed subject matter pertains would, of necessity, have the capability of understanding the scientific and engineering principles applicable to the pertinent art, and moreover, is a person of ordinary creativity, not an "automaton."

28. I understand that claim construction is a matter of law for the Court to decide. I also understand that any claim terms not construed by the Court should be given their plain and ordinary meaning as would be understood by a POSA at the time of the invention and in light of the claims, specification, and prosecution history. I understand that the POSA must read the claim terms in the context of the claim and in the context of the entire patent specification.

29. I understand that, to determine how a POSA would understand a claim term, one should look to sources that show what a person of skill in the art would have understood disputed claim language to mean at the time of the invention. These sources include "intrinsic" evidence, such as the words of the claims themselves, the remainder of the patent's specification, and the prosecution history of the patent, as well as "extrinsic" evidence such as relevant scientific principles, the meaning of technical terms, and the state of the art.

30. I further understand reference materials that were publicly available at the time that the patent application was filed, such as dictionaries, treatises, or other technical references, may provide context and background for deciphering how one of ordinary skill in the art would have considered the terms used in the claims.

31. I understand that POSAs are deemed to read the words used in the patent with an understanding of their meaning in the field, and to have and apply knowledge of any special meaning and usage associated with the term within the field. The words used by the inventor to describe the invention must be understood and interpreted as they would be understood and interpreted by a POSA.

32. I understand that the specification is the single best guide for construing the claims, and that the interpretation to be given a term can only be determined and confirmed with a full understanding of what the inventors actually invented and intended to envelop with the claim as set forth in the patent itself.

33. I understand that a patent claim is required to identify the metes and bounds of the invention by particularly pointing out and distinctly claiming the subject matter that the patentee regards as the invention. I understand that a patent claim is invalid for indefiniteness if that claim as viewed in light of the specification and prosecution history fails to inform a POSA about the scope of the invention with reasonable certainty. It was further explained to me that absolute or mathematical precision in claim language is not required. However, it is not enough that some meaning can be ascribed to a patent's claims. I understand that a claim that recites a relative term of a term of degree may be indefinite if the patent fails to provide objective boundaries or sufficient guidance for that term of degree for a POSA to understand the scope of the claim.

34. I also understand that a claim may lack what is referred to as "antecedent basis" if it refers to a component or step without having previously defined that component or step. Where a claim lacks antecedent basis, I understand that it can be indefinite.

35. I understand that a patentee may choose to express an element in a claim as a means for performing a function without reciting the structure that performs that function in the claims themselves pursuant to 35 U.S.C. § 112(f). In such a case, however, there must be corresponding structure disclosed in the specification that, in the understanding of one skilled in the relevant art, performs the claimed function. If there is no such corresponding structure, the claim is indefinite.

36. I understand that if a claim element does not contain the term "means," it is presumed not to be a means-plus-function limitation subject to 35 U.S.C. § 112(f). However, I

also understand that this presumption can be rebutted by showing that the claim element recites a function without reciting sufficient structure for performing that function, from the perspective of one of ordinary skill in the art.

37. It is further my understanding that certain terms have been explicitly recognized by courts as "nonce" words, which I understand to be verbal constructs that are not recognized as the name of structure and are effectively a substitute for the term "means for." While claim language, including preceding adjectives and modifiers, that further defines a generic term can sometimes add sufficient structure to avoid the application of 35 U.S.C. § 112(f), preceding words of purely functional language will not suffice. I understand that the proper inquiry is whether the words of the claim itself, when read in light of the specification, connote to a POSA definite structure for performing the identified functions.

38. I understand that construing a means-plus-function claim term generally involves two steps. First, the particular claimed function must be identified. Second, the corresponding structure disclosed in the specification as performing that function must be identified. I understand that in order for a structure to qualify as the corresponding structure, the structure disclosed in the specification must be clearly linked to and associated with the function claimed by the means-plus-function claim limitation. I further understand that in order to meet the definiteness requirement of 35 U.S.C. § 112(f), the specification must include a disclosure sufficient for one skilled in the art to understand that the structure disclosed in the specification performs the recited function.

39. I further understand that a patent claiming a computer-implemented means-plus-function limitation must disclose an algorithm for performing the claimed function in order to meet the definiteness requirement of 35 U.S.C. § 112(f). I understand that this is because general-purpose computers can be programmed to perform different tasks in different ways, so merely

disclosing and claiming a general-purpose computer provides no limit on the scope of the claim. As a result, I understand that the corresponding structure for a computer-implemented function is not a computer, but is a specific algorithm that allows a general-purpose computer or microprocessor to perform the claimed function. I understand that the specification can express the algorithm in any understandable terms including as a mathematical formula, in prose, or as a flow chart, or in any other manner that provides sufficient structure for performing the function (*e.g.*, a step-by-step explanation of how the function is performed). I also understand that an algorithm is a step-by-step procedure for accomplishing a given result.

40. I understand that statements that merely recite outcomes or results, without disclosing how those outcomes or results are achieved, are not algorithms, but rather mere statements of function. I also understand that examples in a specification that enable a POSA to make and use the claimed invention do not necessarily constitute disclosure of an algorithm for programming a general-purpose computer or microprocessor to perform the claimed function. I understand that a patent claim is invalid as being indefinite if the specification fails to disclose in sufficient detail an algorithm for programming the computer or microprocessor to perform the claimed function.

41. I understand that patent claims are presumed valid, and that clear and convincing evidence is required to establish that a patent is invalid as indefinite.

42. I have approached my analysis of the Asserted Patents from the perspective of a person having ordinary skill in the art at the time of the filing of the relevant patent applications giving rise to the Asserted Patents, informed by the specification and teachings of the Asserted Patents, the intrinsic record, and extrinsic evidence where appropriate, consistent with the legal principles noted above.

V. OVERVIEW OF ASSERTED PATENTS

A. The ’697 Patent

43. The ’697 patent is entitled “Systems, apparatus, and methods for scalable low-latency viewing of broadcast digital content streams of live events, and synchronization of event information with viewed streams, via multiple internet channels.” It issued on September 24, 2019, from U.S. Patent Application No. 16/267,887, which was filed on February 5, 2019. It is a bypass continuation of application No. PCT/US2017/045801, which was filed on August 7, 2017, which claims a priority benefit to the following U.S. Provisional Patent Applications: No. 62/371,558, filed August 5, 2016; No. 62/435,361, filed December 16, 2016; No. 62/485,878, filed April 14, 2017; and No. 62/518,506, filed on June 12, 2017.

44. The ’697 patent relates generally to “systems, apparatus, and methods for facilitating one or more broadcasters to create/provide video and/or audio” and to “allow one or more viewers to consume the video and/or audio,” either in real-time or by recording. ’697 patent at 2:48–53. Specifically, the ’697 patent states that the invention is directed to solving “one or more technological problems relating to viewer latency, synchronization amongst different numbers of viewers, and providing scalable and flexible access to live streams to different classes/types of viewers and/or with different qualities of service.” *Id.* at 2:60–64.

45. According to the ’697 patent, there was a need to improve “conventional techniques for transmission of digital content via the Internet” due to problems with latency. ’697 patent at 2:24–27. Latency is “the delay between a first user generating a live video stream for transmission via the Internet and a second user receiving a copy of the live stream via the Internet for viewing.” *Id*. at 2:28–31. Specifically, the ’697 patent states that “live video streams with relatively high quality (e.g., high definition HD and high bit rate, such as 2 to 5 megabits per second),” may experience difficulties with synchronizing copies of the live stream across a large number of

viewers. *Id*. at 2:37–47. The ’697 patent purports to solve this problem to ensure a “low latency viewing experience for significant number of viewers” and “appropriate synchronization of event information across all broadcasters of an event and their associated viewers.” *Id*. at 5:19–28.

46. The ’697 patent is directed to “a server and memory storage architecture” for obtaining and then providing to viewers an “audio and/or visual feed” including “commentary associated with [a] live event” and a “separate event data feed including real time information associated with the . . . live event.” *Id.* at 7:7–28. A block diagram of the system is shown in Figure 1A:

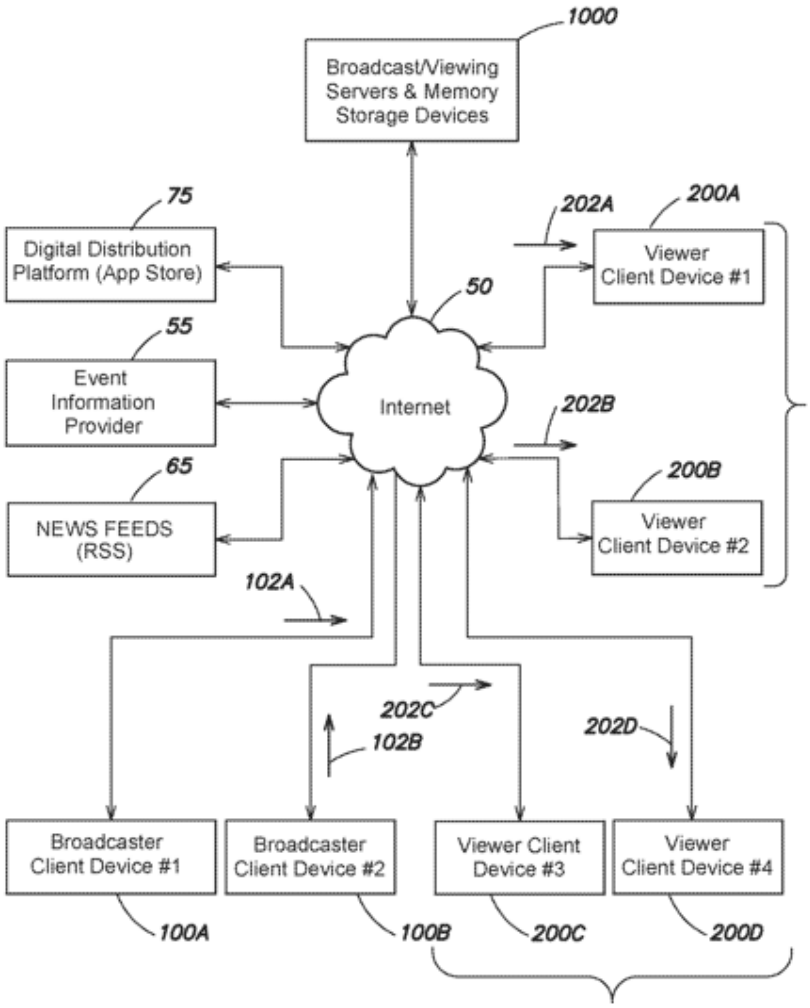

Id. at Fig. 1A.

47. Figure 1A depicts providing "a first viewer client device (200A)" of "a first plurality of viewer client devices (200A, 200b)" individual "copies (202A, 202B) of a first broadcaster's live stream of digital content (102A)." *Id*. at 9:16–58.

48. Figure 2 shows additional details of the server and memory storage architecture depicted in Figure 1A. Among other elements, Figure 2 depicts viewer client devices ("VCDs"), media sources, web servers, a control server, a socket server, event sockets, an event information provider, and a memory system, as shown below:

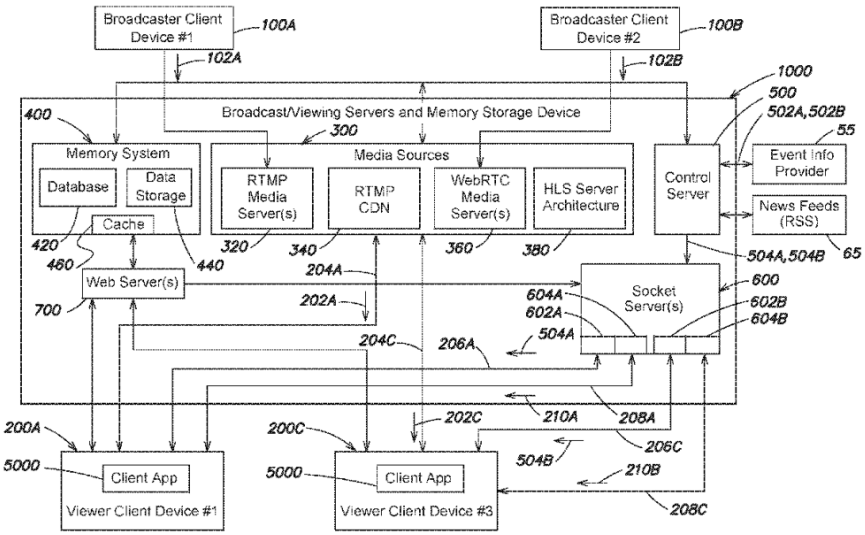

FIG. 2

Id. at Fig. 2.

49. The '697 patent describes media sources as generic "computer servers" comprising known components such as "processors, memory, and . . . communication interfaces." *Id*. at 19:9–10. Although in some implementations the media sources may include media servers directed to specific known protocols, such as RTMP and HLS, the media sources' purpose is to "receive a live stream of video-based commentary from a given broadcaster client device and provide copies of the live stream of video-based commentary to one or more [VCDs]." *Id*. at 19:10–13.

50. The ’697 patent describes a control server as generic server equipment comprising one or more processors, memory devices, and communication interfaces that retrieves event information from an event information provider to pass to the socket server. *See id*. at 19:38–63. The event information is “germane to” a particular “live sporting event,” *e.g.*, the event’s score information. *Id*.

51. The ’697 patent describes a web server as a generic server designed to facilitate communications “between the servers/memory storage devices [] and one or more mobile broadcaster/viewer client device executing the client app.” *Id*. at 18:49–51. According to the ’697, “much of the instructive communication between the client devices and the servers/memory storage devices [] occurs via the web server(s).” *Id*. at 18:55–57. The web server also facilitates communications “to and from web-based client devices (that access the web server(s) via a web portal at a particular URL).” *Id*. at 18:52–54. The web server accomplishes this, in one implementation, by “select[ing] a particular media server of the media sources [] to which a given broadcaster connects to provide the broadcaster’s live stream of digital content . . . .” *Id*. at 19:27–30.

52. The ’697 patent describes socket server(s) as generic servers. ’697 patent at 19:64–20:61. The socket server’s purpose is to “facilitate communication” of “synchronized event information retrieved by the control server” between the control server and the VCDs. *Id*. at 20:1–5. The socket server uses “one or more sockets . . . dedicated to the particular event” allowing VCDs “to establish an event information channel with the socket server.” *Id*. at 5–11. The socket server then shares event information through discrete data packets called “event messages” via the event information channel “in a synchronized manner” to all viewers of that event. *Id*. The socket

server may alternatively facilitate communication of "chat messages" in a similar manner. *See id*. at 20:12–44.

53. The '697 patent explains that the "connections between a given client device and a particular socket of a socket server may be persistent authenticated connections (e.g., with IP-based fingerprint identifiers for anonymous users)." *Id*. at 20:45–48. Each event socket has a corresponding "event identifier" (either an "EventID" or "StreamID") that the VCD "uses . . . to connect to [the] socket," *e.g.*, by using a "URL including the . . . EventID in a path of the URL." *See id*. at 21:53–22:6. Messages carried on channels between sockets of the socket server use traditional IP mechanisms, *e.g.*, data packets, and each socket is uniquely addressable, *e.g.*, by using an identifier that may be contained, *e.g.*, in a URL. *Id*.

54. According to the '697 patent, a "communication channel" refers to "a physical or logical connection over a transmission medium to convey information signals from one or more senders to one or more receivers." *Id*. at 5:34–36. As examples of Internet communication channels, the '697 patent describes various generic Internet communication channels between a sender and receiver: (1) a "video channel" between a media server and a VCD to convey video-based commentary; (2) an "event information channel" between a socket and the client device to convey event information; and (3) a "chat/system event" channel between another socket and the client device to convey chat and other information. *Id*. at 5:36–55.

B. The '687, '218, and '088 Patents

55. The '687 patent is entitled "Systems, apparatus, and methods for scalable low-latency viewing of broadcast digital content streams of live events, and synchronization of event information with viewed streams, via multiple internet channels." It issued on October 3, 2020, from U.S. Patent Application No. 16/580,552, which was filed on September 24, 2019. It is a

continuation of application No. 16/267,887, filed on February 5, 2019, which issued as the ’697 patent. The ’687 patent therefore claims priority to the same applications as the ’697 patent.

56. The ’218 patent is entitled “Systems, apparatus, and methods for rendering digital content relating to a sporting event with online gaming information.” It issued on June 15, 2021, from U.S. Patent Application No. 17/141,631, which was filed on January 5, 2021. It is a continuation of application No. 17/027,219, filed on September 21, 2020, which is a continuation of application No. 16/580,552, filed on September 24, 2019, which issued as the ’687 patent. The ’218 patent therefore claims priority to the same applications as the ’697 and ’687 patents.

57. The ’088 patent is entitled “Systems, apparatus, and methods for providing event video streams and synchronized event information via multiple internet channels.” It issued on January 4, 2024, from U.S. Patent Application No. 17/833,188, which was filed on June 6, 2022. It is a continuation of application No. 16/685,782, filed on November 15, 2019 (now U.S. Patent No. 11,356,742), which is a continuation of application No. PCT/US2018/033016, filed on May 16, 2018, which claims a priority benefit to the following U.S. Provisional Patent Applications: No. 62/627,859, filed February 8, 2018; No. 62/542,729, filed August 8, 2017; and No. 62/507,158, filed May 16, 2017.

58. I have reviewed the specifications of the Asserted Patents and concluded that their specifications are materially the same for the purposes of my analysis. In particular, the ’697, ’687, and ’218 patents have substantially identical specifications. Although the ’088 patent is not a continuation of any of the other three Asserted Patents, its specification discloses substantially

identical material to the other three Asserted Patents.[1] In this declaration I will refer to the material shared by all four Asserted Patents as the "common specification" of the Asserted Patents. Although I may refer at times only to exemplary disclosures in the '697 patent for convenience, unless otherwise noted my analysis and opinions are also based on the corresponding disclosures from the other three Asserted Patents.

---

[1] The '088 patent contains additional disclosures concerning a "single screen" embodiment that is not present in the other three Asserted Patents. *See* '088 patent at Figs. 28–32F, 54:12–63:35.

VI. PERSON OF ORDINARY SKILL IN THE ART ("POSA")

59. In determining the characteristics of a hypothetical POSA for the subject matter of the Asserted Patents at the time of the claimed invention, I considered several things, including the type of problems encountered in this field, and the rapidity with which innovations were made. I also considered the sophistication of the technology involved, the educational background and professional experience of those actively working in the field, and the level of education necessary to understand the Asserted Patents.

60. Finally, I placed myself back in the relevant period of time and considered the state of the art and the level of skill of the engineers working in this field at that time.

61. In my opinion, a POSA at the time of the alleged invention described in the Asserted Patents would have held at least a bachelor's degree in electrical engineering, computer engineering, or a related field. A POSA would have a basic understanding of and at least four years' experience with researching, designing, implementing, or testing live streaming technology. Additional education or experience in related fields could compensate for deficits in the above qualifications.

62. Based on my education and experience, I meet or exceed the criteria for a POSA as to each of the Asserted Patents. In particular, I have undergraduate and advanced degrees in electrical engineering. Further, I was a professor at Georgia Tech's School of Electrical and Computer Engineering and Cornell University's School of Electrical and Computer Engineering for nearly forty years. At Georgia Tech and Cornell, I taught and conducted research on wired and wireless information networks, digital telephony, information theory, and security, as well as supervising forty-four Ph.D. students.

VII. ANALYSIS OF DISPUTED CLAIM TERMS

A. "socket"

Claims	Genius Sports' Construction	PANDA's Construction
'697 Pat. cl. 1, 2, 4–6, 9, 13, 14, 19–25; '687 Pat. cl. 1, 2, 4, 5, 7, 9, 13, 14, 19–25; '218 Pat. cl. 1–5, 7, 10, 12, 13, 15, 16, 19, 20; '088 Pat. cl. 1, 8, 13, 18, 24, 30	Plain and ordinary meaning, which is "a network communication endpoint identified by port number and network address"	Plain and ordinary meaning, where the plain and ordinary meaning is "endpoint for network communications."

63. I have considered the term "socket" as it would have been understood by a POSA at the time of the invention. This term, or variations of it (*e.g.*, "event socket"), appear in each of the Asserted Patents. It is my opinion that a POSA would understand the plain and ordinary meaning of the term "socket" to be "a network communication endpoint identified by port number and network address." The Asserted Patents appear to employ the term "socket" consistent with this plain and ordinary meaning.

64. I have also considered PANDA's proposed construction. As I explain below, PANDA's proposal omits a critical aspect of a POSA's understanding, namely that a socket is identified by a port number and network address. PANDA's proposal is therefore incomplete.

65. Based on my decades of experience working in the field of electrical and computer engineering, which also included designing and implementing undergraduate and graduate instruction on the design and operation of packet-switched computer networks, in my opinion a POSA would understand a "socket" to mean a network communication endpoint that is identified by a port number and a network address.

66. In computer networks employing the TCP/IP family of protocols, such as those used for communications over the Internet, a socket is an endpoint created by a sender or receiver to establish a connection for exchanging data between two machines. A.S. Tanenbaum & D.J.

Wetherall, COMPUTER NETWORKS (GS_00010283) ("Tanenbaum") at 553; M. Marques da Silva, MULTIMEDIA COMMUNICATIONS AND NETWORKING (GS_00001504) ("da Silva") at 378; NEWTON'S TELECOM DICTIONARY (27th ed., 2013) (GS_00017306) ("Newton's") at 1098.

67. Sockets would be well known to a POSA by the time of the earliest priority dates of the Asserted Patents, as sockets have been used in the field of computer networking since the 1980s. Tanenbaum at 500. As a POSA would appreciate, sockets are used in the transport layer of network communication, that is, the layer that is responsible for transporting data from a specific process on one machine to a specific process on another machine. *Id.* at 495. Sockets, as part of the transport layer, thus build on services provided by the network layer, which is concerned with routing and delivering packets sent from one machine to another, independent of the specific processes involved on each machine. *Id.*

68. Individual sockets are addressed or identified by a number that combines a network address (*e.g.*, an IP address) with a port number. Indeed, textbooks and technical dictionaries around the time of the claimed invention uniformly teach that sockets have both a network address and a port number. *See, e.g.*, Tanenbaum at 553 ("Each socket has a socket number (address) consisting of the IP address of the host and a 16-bit number local to that host, called a **port**.") (emphasis in original); da Silva at 378 ("A socket consists of the concatenation of an IP address with a port number."); Newton's at 1098 (socket address refers to "the combination of an IP address and port number"); WILEY ELECTRICAL AND ELECTRONIC ENGINEERING DICTIONARY (2004) (GS_00017309) at 721 ("Each socket has an associated address, consisting of a port number and network address."); WEBSTER'S NEW WORLD COMPUTER DICTIONARY (10th ed., 2003) (GS_00017312) at 347 ("To achieve a connection, a client needs to specify both the IP address and the port number of the server application."); MICROSOFT COMPUTER DICTIONARY (5th ed.,

2002), at 498 (a "socket consists of a node address and a port number"). This is the same well-established meaning of a socket that I have taught in computer networks courses for undergraduate and graduate engineering students.

69. This meaning of "socket" is supported by its function in network communications. Communications over a computer network are typically structured as a set of layers and protocols, or a "protocol stack." Tanenbaum at 29–31. According to widely used models for Internet communications, data is exchanged in the network layer in the form of "packets." *Id.* at 41–44. As shown below, the header of every packet transmitted over the network layer of the Internet Protocol (IP) includes a source address and destination address:

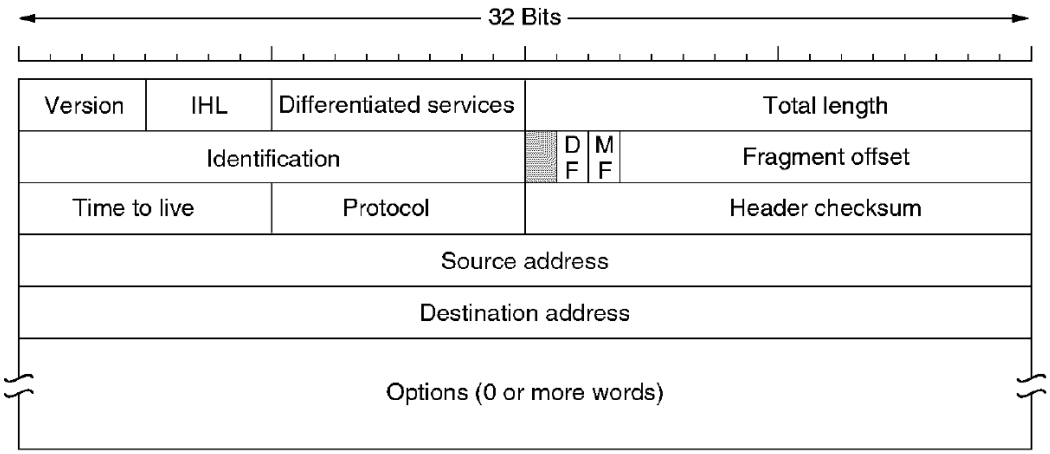

Id. at 439, Fig. 5-46.

70. An IP address is an example of a network address. Tanenbaum at 509. Every host on the Internet has an IP address that can be used in the source and destination address fields of an IP header, to facilitate routing of the packet from the source to its destination. *Id.* at 442. Although the network address (*e.g.*, an IP address) may be sufficient for the network to deliver the packet to the correct machine, it does not indicate a specific process or application on the machine that should receive the data. *Id.* at 553. For example, a computer typically has multiple active connections at any time to send and receive data for specific applications, such as email, web

browsing, multimedia, and file transfers. *Id.* at 554. Individual applications, such as a web browser, may also maintain multiple ongoing connections with one or more servers. *Id.* at 553–54. Each connection requires its own destination socket. *Id.* Likewise, a server may have multiple active connections, each with its own source socket. *Id.*

71. The TCP/IP model, for example, uses the port number and IP address to uniquely identify a socket on a machine. Tanenbaum at 553. In other words, the IP address identifies a machine on a network and the port number identifies a local end point for a connection on that machine. *Id.* at 509, 557. In order to uniquely identify a connection, each TCP segment (which is encapsulated in an IP packet) includes source port and destination port fields in its header:

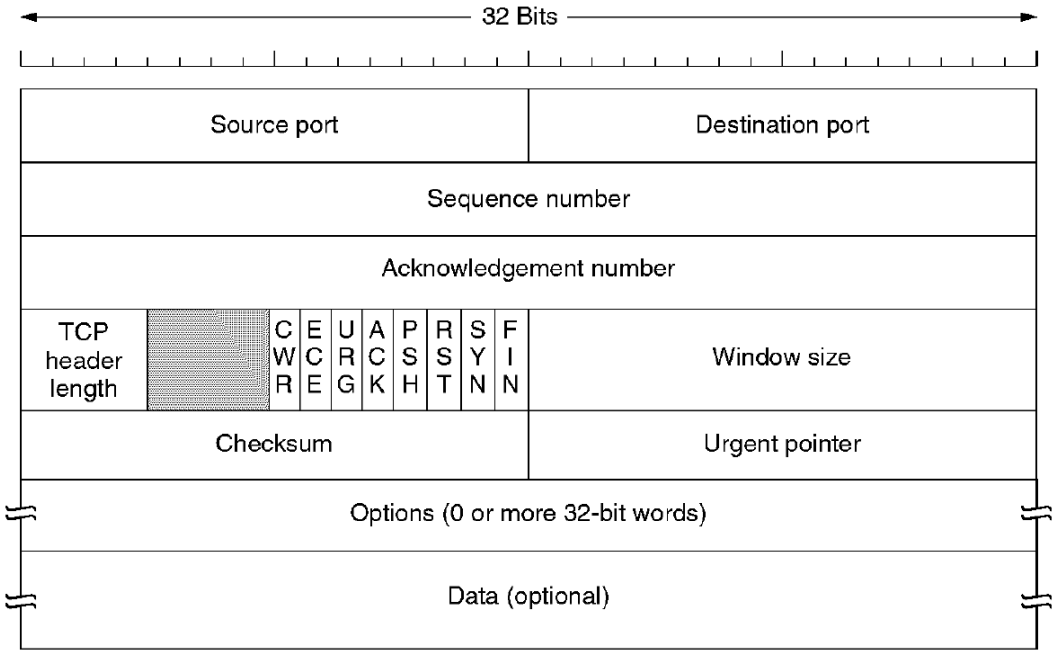

Id. at 557, Fig. 6-36.

72. To transmit data using TCP, a connection must be established between a socket on one machine and a socket on another machine. Tanenbaum at 553. Each such socket is identified by a network address and port number. *Id.* Thus, a POSA would understand a socket to be a network communication endpoint identified by port number and network address.

73. I have also analyzed the intrinsic record to assess whether the Asserted Patents use the term "socket" in a manner consistent with its plain and ordinary meaning. As an initial matter, I observe that the Asserted Patents do not set forth an express definition of "socket" anywhere in their common specification, nor did the patentee provide one during prosecution. Rather, the Asserted Patents simply use the term socket with the apparent expectation that a POSA would understand the concept.

74. The claims and common specification of the Asserted Patents also confirm that "socket" is used in its plain and ordinary meaning, *i.e.*, a network communication endpoint identified by port number and network address. For example, consistent with the discussion above, the Asserted Patents describe an "Internet communication channel" "between a ***particular*** socket" of a server and a client. *See, e.g.*, '697 patent at 5:42–44 (emphasis added); *see also id.* at 19:64–20:61. The Asserted Patents also describe servers with multiple sockets. *Id.* at 5:45–47 (describing a separate Internet communication channel "between another socket" of the server and the client); *id.* at 21:37–24:5 (describing channels between multiple sockets). A POSA would appreciate that such connections are not specified by the identity of the client and server alone; rather, the connections in the Asserted Patents are between specific sockets on those machines.

75. This is further confirmed by the Asserted Patents' description of such communications taking place over the Internet. *See, e.g.*, '697 patent at 14:41–49 (all servers and devices in the system are "communicatively coupled via the Internet"). Indeed, the Asserted Patents expressly refer to the communication channels between the sockets on a server and clients as "Internet" communication channels. *See, e.g., id.* at 21:65–22:6. A POSA would therefore appreciate that in the Asserted Patents the term "socket" is used in the context of network connections according to well-known TCP/IP protocols, described above. In that context, a POSA

would understand each socket in the claims of the Asserted Patents to be a network communication endpoint identified by port number and network address.

76. I understand that PANDA agrees that "socket" should be accorded its plain and ordinary meaning, but offers a different meaning, namely an "endpoint for network communications." While I agree that a POSA would understand a socket as an endpoint for network communications, PANDA's proposal is incomplete.

77. End-to-end connection-oriented communications in a network involve at least two distinct sets of "endpoints." In the network layer, an endpoint generally refers to a single computer identified by a network layer address, such as an IP address. Tanenbaum at 509. But as noted above, a single computer may be running multiple application processes that require separate endpoints in the transport layer. *Id.* Those process-specific endpoints are known as sockets and are identified by port number in addition to the network address. *Id.* at 509, 553. While the endpoints in the network layer and the transport layer are both endpoints "for network communications," only the endpoints identified by port number at the transport layer are "sockets" as a POSA would understand the term. PANDA's proposal glosses over those important distinctions and its definition would incorrectly include endpoints that a POSA would not view as sockets.

78. I further note that sockets are software-based entities. According to PANDA's definition, a socket could be any device that happens to be a network endpoint, such as a line termination or other passive physical device. This is clearly incorrect.

79. The common specification of the Asserted Patents confirms that a "socket" is not a generic network communication endpoint, but is instead used to refer to one particular endpoint on a server that has multiple such endpoints. As noted above, the Asserted Patents describe servers

having multiple sockets, whereby clients connect to certain sockets in particular. *See* '697 Patent at 5:42–47, 19:64–20:61, 21:37–24:5. Given the Asserted Patents' emphasis on facilitating "scalable" distribution of event information, *e.g.*, *id.* at 5:7–14, moreover, a POSA would not consider sockets in this context to refer to endpoints at the network layer, each identified by a separate IP address. Indeed, requiring separate network-layer endpoints (and thus separate IP addresses) for each connection would prove difficult to scale because, whereas port-addressable sockets can be opened and closed dynamically, IP addresses generally must be allocated for fixed periods of time through a technique called "leasing." Tanenbaum at 470, 501–02. It is no surprise, then, that the Asserted Patents do not include any disclosure concerning the use of separate communication endpoints identified by IP address.

80. My opinion concerning the plain and ordinary meaning of a socket is further supported by the extrinsic evidence that PANDA cites in support of its proposal. *See* Joint Claim Construction and Prehearing Statement (Dkt. 48), Ex. A, at A-6. PANDA first points to an "RPG IV Socket Tutorial" which refers to a socket as an "endpoint for network communications." Scott Klement, "RPG IV Socket Tutorial" (GS_00017779), at 2. In my opinion, this description from an informal tutorial directed to a specific programming language does not accurately capture a POSA's understanding of the term "socket" as used in network communications. Nonetheless, the same section of the tutorial on which PANDA relies also explains that to "allow multiple TCP connections to and from a given host, 'port' numbers are established." *Id.* To that end, each TCP packet includes port numbers that "determine which program running under which of the system's tasks is to receive the data." *Id.* In fact, the tutorial PANDA cites draws the analogy between sockets in a TCP connection with an "extension number" in a telephone call: just as you may need to use an extension number if there are "many people who can be reached" at a particular telephone

number, in the same way a port number is used to connect to a particular socket when there are "many different services" at the same IP address. *Id.* at 3. Consistent with that explanation, the socket API calls described in the tutorial PANDA cites expressly require a port number as part of the socket address. *See, e.g.*, *id.* at 14–15.

81. PANDA also cites a document titled "Beej's Guide to Unix IPC," which includes a section on "Unix Sockets." Brian Hall, "Beej's Guide to Unix IPC" (GS_00017619) ("Hall"), at 41–45. Notably, IPC refers to "Interprocess Communication," that is, communication between different process ***on the same computer***. *Id.* at 1. The portion of the guide on which PANDA relies relates not to sockets for communicating between computers over a network, but instead to "sockets that can be used between processes on the same Unix system." *Id.* at 41. Because the Asserted Patents are directed to connections between sockets over the Internet, *see, e.g.*, '697 patent at 14:41–49, 21:65–22:6, a guide to interprocess communications on Unix systems does not, in my opinion, reflect a POSA's understanding of the term "socket" as used in network communication. In fact, the guide cited by PANDA refers to a separate guide for ***Internet*** sockets, *see* Hall at 41, which confirms that such sockets use port numbers to differentiate between services on a machine with a single IP address. *See* Brian Hall, "Beej's Guide to Network Programming Using Internet Sockets" (GS_00017670), at 13.

82. In view of the above disclosures and analysis, it is my opinion that "socket" is used in the Asserted Patents according to its plain and ordinary meaning, which is "a network communication endpoint identified by port number and network address."

B. "event socket"

Claims	Genius Sports' Construction	PANDA's Construction
'697 Pat. cl. 1, 2, 4–6, 9, 13, 14, 19–25; '687 Pat. cl. 1, 2,	"a socket dedicated to a particular event"	A socket through which event information can be sent in a

4, 5, 7, 9, 13, 14, 19, 20, 22, 23, 25; '218 Pat. cl. 1–5, 7, 12, 13, 16, 19, 20		synchronized manner to multiple client devices.

83. I have also considered the term "event socket" as it would have been understood by a POSA at the time of the invention. This term appears in each of the Asserted Patents. In my opinion, the term "event socket" should be construed to mean "a socket dedicated to a particular event."

84. Unlike the term "socket," which I address above, "event socket" is not a term of art in the field of computer networking. Accordingly, in my opinion a POSA would have consulted the common specification of the Asserted Patents to determine what the term means. In that regard, I observe that the common specification describes an "inventive server and memory storage architecture," detailed in Figures 2 and 3 of the Asserted Patents, which includes, among other elements, a "socket server" having a "first event socket" that "corresponds to the first event information germane to the first live sporting event." '697 patent at 3:4–7, 9:47–58. In connection with Figure 2, the common specification states that in the "various inventive implementations disclosed" therein, event information is provided by a "socket-based 'event information channel' ***dedicated to the event***" such that viewers connect to the "one or more sockets of a socket server that is/are ***dedicated to the event***." *Id.* at 26:50–62 (emphasis added).

85. Further, the claims of the Asserted Patents make clear that each event socket is dedicated to a particular event. Each claim of the Asserted Patents that recites one or more "event sockets" links each event socket to a particular event. *See, e.g.*, *id.*, claims 1 (the "first event socket corresponds to the first event information germane to the first live sporting event"), 23 (same), 19 (first event information is transmitted between a first event socket and a client whereas second event information is transmitted between a second event socket and another client).

86. Based on my review of the specification, therefore, it is my opinion that the applicants considered it critical to their invention that an event socket is dedicated to a particular event. For example, when describing the claimed "socket server" the common specification uniformly states that the sockets of the socket server are "dedicated to the particular event." *Id.* at 20:5–11; *see also id.* at 22:53–66 (event information channel is between the client and one or more sockets "dedicated to a particular event"); *id.* at 27:19–27 (changes in event status are provided to the "sockets dedicated to the event"); *id*. 47:3–11 (same). Further, if there are two events, according to the Asserted Patents the socket server in the allegedly inventive system establishes "first event sockets . . . ***dedicated to the first event information***" and "second event sockets . . . ***dedicated to the second event information***." *Id.* at 21:48–52 (emphasis added).

87. Based on these disclosures, in my opinion a POSA would have understood that each claimed "event socket" is a socket that is "dedicated to a particular event."

88. I understand that PANDA has proposed that an "event socket" is a "socket through which event information can be sent in a synchronized manner to multiple client devices." In my opinion, this proposed construction is incomplete at best, and further introduces ambiguity into the claim language.

89. As discussed above, the claims and specification make clear that each event socket is dedicated to a particular event. PANDA's proposed construction does not account for this aspect of an event socket, which the patentees considered part of the "inventive" server architecture of the Asserted Patents. Indeed, I understand that PANDA has claimed in this litigation that the technology claimed by the Asserted Patents includes a "novel socket server architecture" in which "a socket is dedicated to a particular live stream to all viewers watching that live stream." First Amended Complaint (Dkt. 43) ("FAC") ¶¶ 9, 11–12. PANDA has claimed that sockets dedicated

to particular events represents a "novel and specific technological improvement over the prior art" that improves the "technical functioning" of computer networks and addresses purported weaknesses in "conventional" systems. *Id.* ¶¶ 47, 50; *see also* Plaintiff's Responses and Objections to Defendant's First Set of Interrogatories (5/29/2024) at 32–33 (sockets dedicated to events among the inventive concepts claimed by the Asserted Patents).

90. In addition, PANDA's construction is ambiguous in the context of the claims. PANDA's proposal would have the event information sent "in a synchronized manner" to an unspecified number of "multiple client devices." Not every claim of the Asserted Patents, however, requires event information from a particular socket to be transmitted to multiple client devices. For example, claim 1 of the '697 patent recites only a "first viewer client device" of a "plurality of viewer client devices." Were PANDA's construction to be adopted, it would not be clear whether the claims require event information to be sent in a synchronized manner with additional viewer client devices not expressly recited in the claims.

91. In view of the above disclosures and analysis, it is my opinion that a POSA would understand "event socket" in the Asserted Patents to mean "a socket dedicated to a particular event."

C. "socket server"

Claims	Genius Sports' Construction	PANDA's Construction
'697 Pat. cl. 1, 2, 4–6, 9, 13, 14, 19–25; '687 Pat. cl. 1, 2, 4, 5, 7, 9, 13, 14, 19–25; '218 Pat. cl. 1, 3, 4, 7, 10, 12, 15, 16; '088 Pat. cl. 1, 4, 5, 8, 13, 18, 24, 28–30	"a server in which a socket is dedicated to a particular event"	No construction required; plain and ordinary meaning

92. I have also considered the term "socket server" as it would have been understood by a POSA at the time of the invention. This term appears in each of the Asserted Patents. In my

opinion, the term "socket server" should be construed to mean "a server in which a socket is dedicated to a particular event."

93. "Socket server"—like "event socket" and in contrast to the term "socket" standing alone—is not a term of art in the field of computer networking. Accordingly, in my opinion a POSA would have consulted the common specification of the Asserted Patents to determine what the term means. Notably, the Asserted Patents do not define the term "socket server." Rather, the Asserted Patents describe the socket server in generic terms, for example stating that it "facilitate[s] communication" of event information to viewer client devices. *See* '697 patent at 20:10–21. The Asserted Patents also explain that the "various servers" shown in Figure 2, which includes the socket server, comprise generic components such as processors, memory, and communication interfaces. *See id.* at 55:16–25.

94. Despite that, I observe that the "socket server" is part of what the Asserted Patents describe as an "inventive server and memory storage architecture" detailed in Figures 2 and 3 of the Asserted Patents. *Id.* at 3:4–7, 9:47–58. In connection with Figure 2, the common specification states that in the "various inventive implementations disclosed" therein, viewers connect to the "one or more ***sockets*** of a ***socket server*** that is/are ***dedicated to the event***." *Id.* at 26:50–62 (emphasis added).

95. Further, the claims of the Asserted Patents make clear that the sockets of the socket server are dedicated to particular events. Every claim of the Asserted Patents that recites a "socket server" also includes at least one event socket of the socket server. And as discussed above with respect to the term "event socket," each event socket is dedicated to a particular event.

96. Based on my review of the specification, therefore, it is my opinion that the applicants considered it critical to their invention that a socket server is a server in which its sockets

are dedicated to particular events. For example, when describing the claimed "socket server" the common specification uniformly states that the sockets of the socket server are "dedicated to the particular event." *Id.* at 20:5–11; *see also id.* at 22:53–66 (event information channel is between the client and one or more sockets "dedicated to a particular event"); *id.* at 27:19–27 (changes in event status are provided to the "sockets dedicated to the event"); *id.* 47:3–11 (same). Further, if there are two events, according to the Asserted Patents the socket server in the allegedly inventive system establishes "first event sockets . . . ***dedicated to the first event information***" and "second event sockets . . . ***dedicated to the second event information***." *Id.* at 21:48–52 (emphasis added).

97. Moreover, as discussed above with respect to the term "event socket," PANDA claims that one aspect of its "novel socket server architecture" is that "a socket is dedicated to a particular live stream to all viewers watching that live stream." FAC ¶¶ 9, 11–12. PANDA claims this represents an improvement over prior art techniques. *Id.* ¶¶ 47, 50; Plaintiff's Responses and Objections to Defendant's First Set of Interrogatories (5/29/2024) at 32–33.

98. In view of the above disclosures and analysis, it is my opinion that a POSA would understand "socket server" in the Asserted Patents to mean "a server in which a socket is dedicated to a particular event."

D. Means-Plus-Function Terms

99. I have considered various terms reciting "means for" performing various functions, set forth below. Based on my review of the terms below, and my understanding of the applicable law, each term is subject to 35 U.S.C. § 112(f) because the terms do not connote to a POSA any definite structure or class of structures capable of performing the recited function. I understand that PANDA agrees these terms invoke the requirements of 35 U.S.C. § 112(f). *See* Joint Claim Construction and Prehearing Statement (Dkt. 48), Ex. A, at A-15 to -25.

100. For each term below I analyzed the common specification of the Asserted Patents to determine whether there is a corresponding structure for performing the function recited by the claim. As I explain below for each of the means-plus-function terms, the recited functions are implemented on one or more computers. I understand that for a computer-implemented means-plus-function term to be definite, the specification itself must disclose an algorithm for performing the specific computer function. Based on my review, the Asserted Patents disclose only general-purpose computing devices, which I understand is insufficient structure for performing a specific computer-implemented function. I also did not locate any algorithms in the Asserted Patents that would inform a POSA of how to implement the specific functions recited by the means-plus-function terms on a general-purpose computer.

101. I have also considered PANDA's proposed structure(s) for each of the disputed means-plus-function terms, including the disclosures PANDA identified in the specifications of the Asserted Patents. PANDA's proposed structures consist of generic computer networking components (such as a "media source," a "control server," and a "socket of a socket server") that implement "algorithms" purportedly disclosed in the specifications of the Asserted Patents. As I explain below for each of the terms, however, based on my review of the cited portions of the specification, the Asserted Patents do not disclose any "algorithms" for performing the specific functions claimed by the means-plus-function terms below.

102. In my opinion, for each of the means-plus-function terms discussed below, PANDA has not identified adequate structure in the specifications of the Asserted Patents for performing the entire recited function that is clearly linked to the function recited in the claim. It is therefore my understanding, having been informed of the applicable legal principles, that such terms are indefinite.

1. "Means for Providing" Terms

Terms	Genius Sports' Construction	PANDA's Construction
"means for providing the first copy to the first viewer client device via a first video communication channel" ('697 Pat. cl. 27, 30; '687 Pat. cl. 27, 30)	Subject to § 112(f); indefinite	Subject to § 112(f); not indefinite. Functions: providing the first copy to the first viewer client device via a first video communication channel. Structure: a media source that implements the algorithms described in FIGs. 2, 3, 4A-4B, 5A-5C, 6, 7, 8, 9A-9D, 11, and 12, and accompanying disclosures, including 9:16-10:43; 15:30-58; 18:7-19; 19:7-37; 21:21-36; 25:46-26:18; 27:30-52; 28:5-40; 30:54-31:22; 31:23-32:21; 32:22-38:46; 39:34-40:61; and 41:10-44:35 of the '697 Patent, and equivalents thereof.

103. Claim 27 of the '697 Patent recites a "system for providing a first copy of a first broadcaster's live stream of digital content including first live sporting event video-based commentary from a first broadcaster client device to a first viewer client device" comprising, among other elements, "means for providing the first copy to the first viewer client device via a first video communication channel." Claim 27 of the '687 Patent similarly recites a "system for providing, to a first viewer client device, a first copy of a first live stream of digital content relating to a first live sporting event" comprising, among other elements, "means for providing the first

copy to the first viewer client device via a first video communication channel."[2] I may refer to these terms together as the "means-for-providing" terms.

104. I understand that PANDA contends the specified function is "providing the first copy to the first viewer client device via a first video communication channel," which is the same function recited by the claims.[3] I have taken PANDA's proposed function into account when evaluating the disclosures PANDA contends provide adequate structure for performing this function.

105. I have considered PANDA's proposed structure for this function, which is identical for all instances of the term: "a media source that implements the algorithms described in FIGs. 2, 3, 4A-4B, 5A-5C, 6, 7, 8, 9A-9D, 11, and 12, and accompanying disclosures, including 9:16-10:43; 15:30-58; 18:7-19; 19:7-37; 21:21-36; 25:46-26:18; 27:30-52; 28:5-40; 30:54-31:22; 31:23-32:21; 32:22-38:46; 39:34-40:61; and 41:10-44:35 of the '697 Patent, and equivalents thereof."[4]

106. I disagree that the media source(s) described in the Asserted Patents disclose adequate structure for performing the claimed function of "providing" a copy of a particular live

---

[2] Claim 30 of the '697 Patent and claim 30 of the '687 Patent (both of which depend from claim 27 of their respective patents) recite the same "means for providing the first copy to the first viewer client device via a first video communication channel." Unless otherwise noted, my analysis set forth herein applies equally to the disputed term as used in all four claims.

[3] The "first copy" refers to a "first copy of a first broadcaster's live stream of digital content including first live sporting event video-based commentary from a first broadcaster client device" in the '697 Patent and to a "first copy of a first live stream of digital content relating to a first live sporting event" in the '687 Patent. Unless otherwise noted, this distinction is not material to my analysis.

[4] PANDA refers to unspecified "equivalents" of the cited disclosures, but has not identified or explained the scope of the structures or algorithms it contends are equivalent. I therefore reserve the right to respond with additional analysis and opinion if PANDA is later permitted to identify alleged equivalents.

stream of digital content to a particular viewer client device via a particular communication channel. The Asserted Patents confirm that media sources are simply "computer servers including one or more processors, memory, and one or more communication interfaces." '697 Patent at 19:7–10. Similarly, the Asserted Patents make clear that each of the hardware components that the media sources may include (*e.g.*, RTMP media servers, RTMP CDN, WebRTC media servers, and HLS caching and amplifying server architecture) is also a general-purpose computer or server. The Asserted Patents state that any of the servers described in the specification may be implemented using generic components such as "processors," "memory devices," and "communication interfaces." *Id.* at 54:39–56:3.

107. Furthermore, in my opinion, the claimed function could not be performed by a general-purpose computer without special programming. In particular, to accomplish the function of providing a copy of a live stream of digital content to a viewer client device via a communication channel, such programming would have to include at least locating the live stream of digital content to be copied, copying the live stream, temporarily storing the live stream for transmission, identifying the viewer client device to which the copy should be provided, identifying the communication channel over which the copy can be provided to the viewer client device, and determining how to provide the copy to the correct viewer client device over the correct channel. Each of these tasks would require numerous discrete routines, functions, or steps that would need to be implemented in software or configurations.

108. Based on my review of the specifications of the Asserted Patents, I did not find any structural or algorithmic description of how to perform the claimed specific functions on a general-purpose computer.

109. My review of PANDA's cited disclosures confirms my opinion that the Asserted Patents provide no such algorithm or structural description of how to perform the claimed specific function on a general-purpose computer. First, PANDA identifies certain figures (shown below) that consist of block diagrams including "media sources" among other elements.

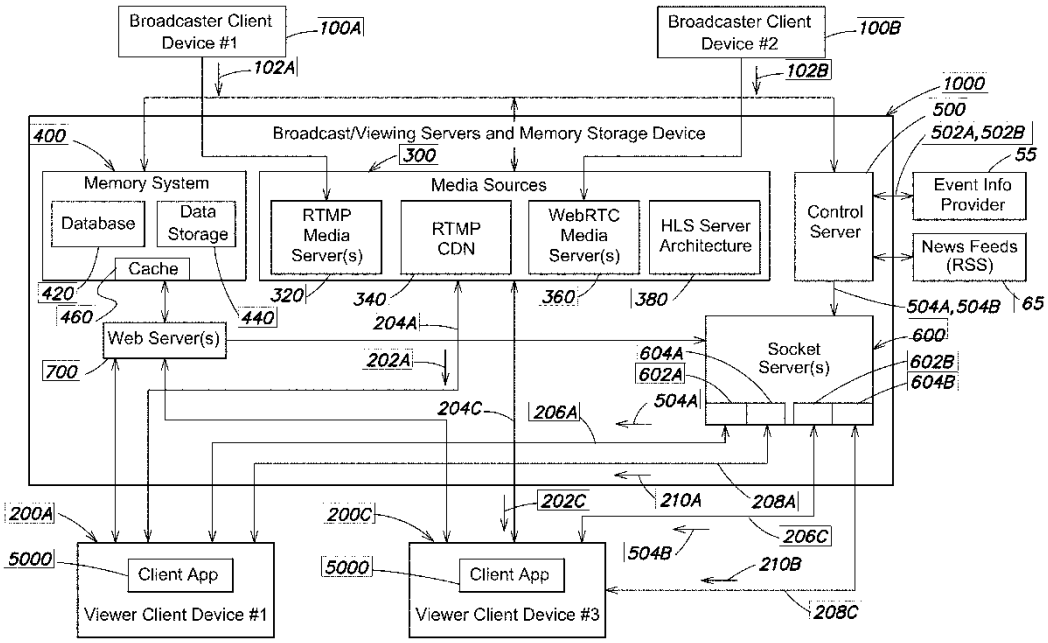

'697 Patent at Fig. 2.

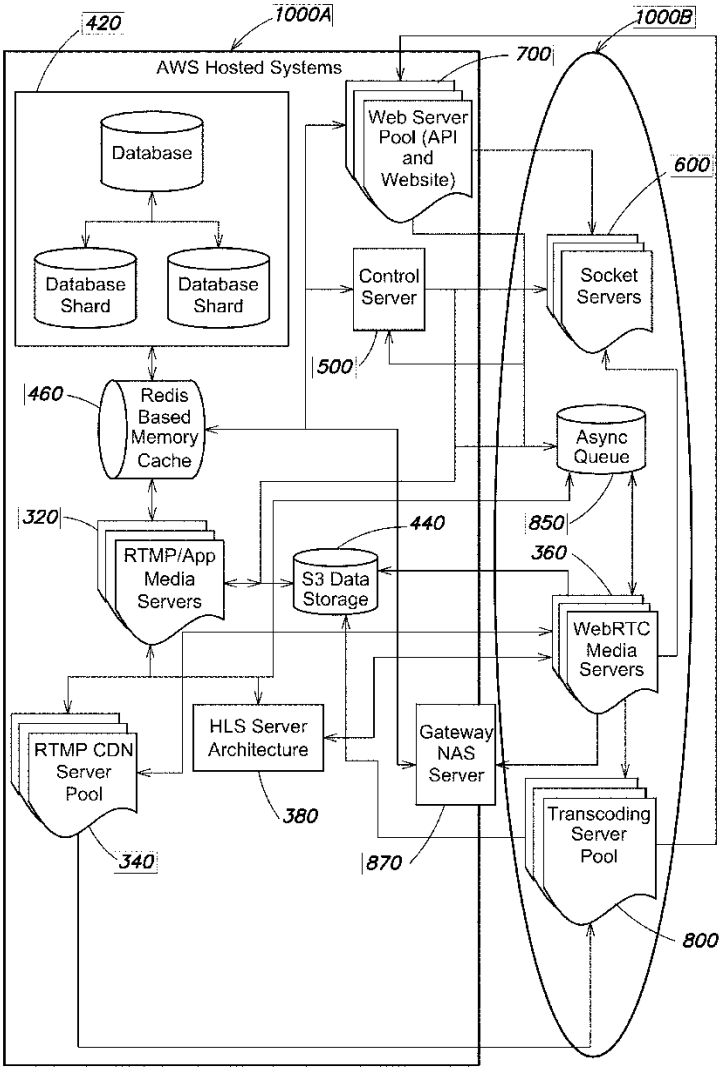
420
1000A
1000B
AWS Hosted Systems
700
Database
Web Server Pool (API and Website)
600
Database Shard
Database Shard
Control Server
Socket Servers
500
460
Redis Based Memory Cache
Async Queue
320
440
850
RTMP/App Media Servers
S3 Data Storage
360
WebRTC Media Servers
HLS Server Architecture
Gateway NAS Server
RTMP CDN Server Pool
380
Transcoding Server Pool
340
870
800

Id. at Fig. 3.

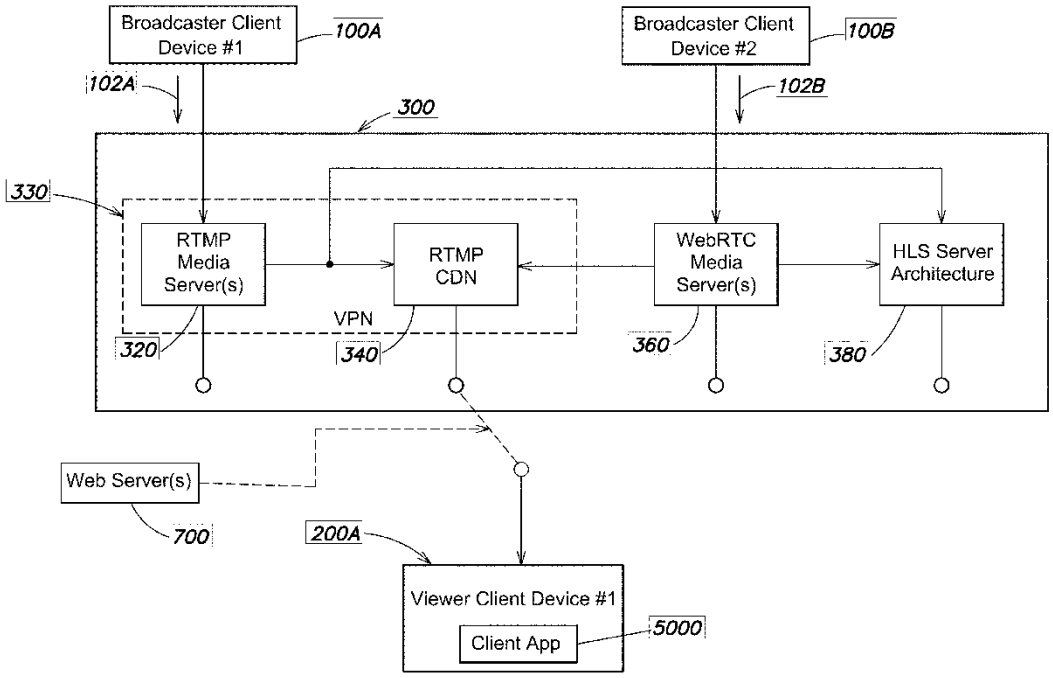
Broadcaster Client Device #1
100A
Broadcaster Client Device #2
100B
102A
102B
300
330
RTMP Media Server(s)
RTMP CDN
WebRTC Media Server(s)
HLS Server Architecture
VPN
320
340
360
380
Web Server(s)
700
200A
Viewer Client Device #1
Client App
5000

Id. at Fig. 6.

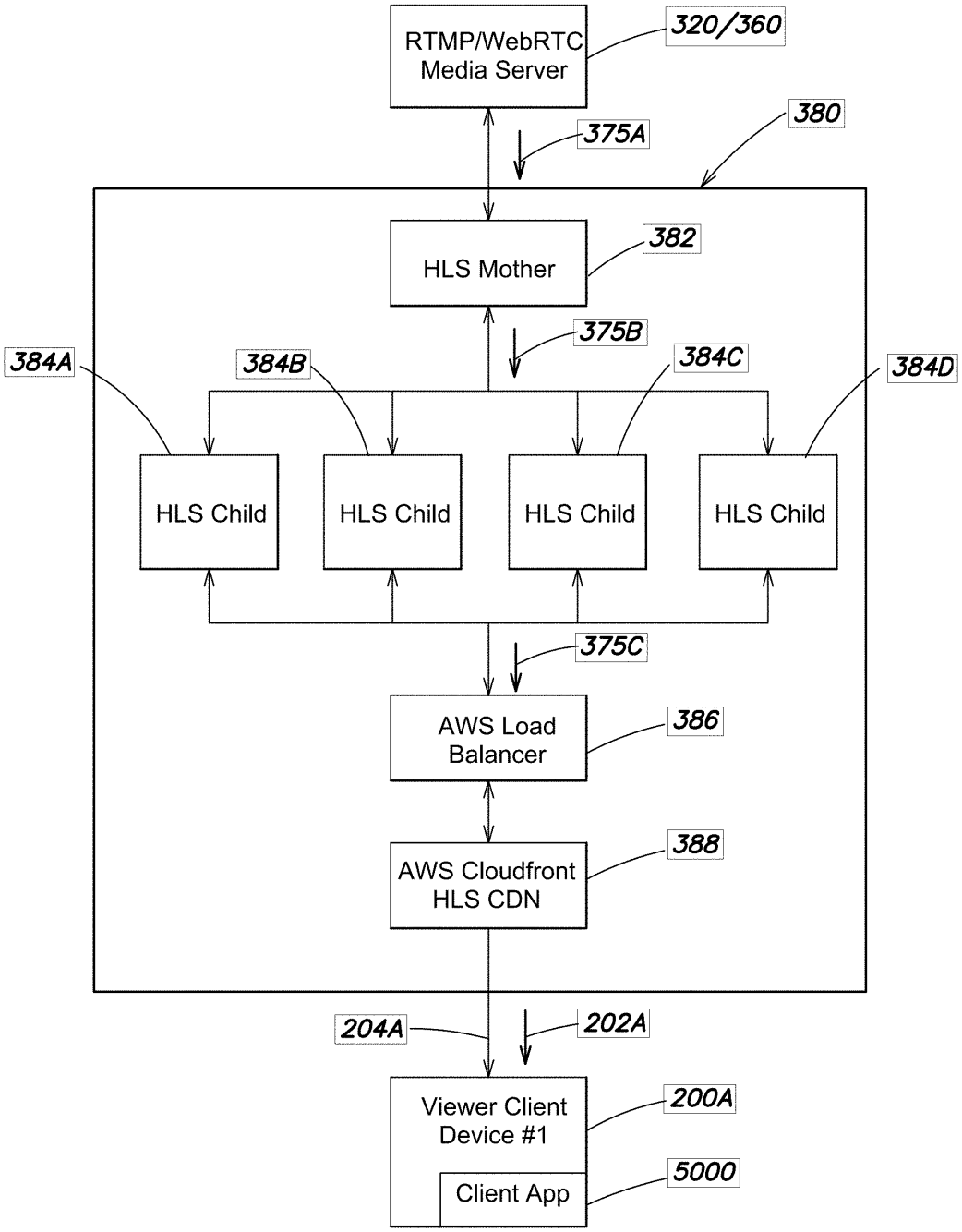

Id. at Fig. 8.

110. As preliminary matter, it is unclear what elements or parts of the block diagrams shown in Figures 2, 3, 6, and 9 of the Asserted Patents PANDA contends is the "media source" that implements the claimed function. The figures include certain elements that the Asserted Patents refer to as media sources (such as the RMTP Media Server(s), RTMP CDN, WebRTC

Media Server(s), and HLS Server Architecture), *see, e.g.*, *id.* at Fig. 2, 19:7–21, but also numerous distinct elements that the Asserted Patents do not refer to as media sources (such as broadcaster client devices, a control server, socket server(s), and web server(s)). Further, the Asserted Patents describe the media sources above in optional language, stating that media sources "may comprise one or more" of the RTMP media servers, RTMP CDN, WebRTC media servers, or HLS caching and amplifying server architecture. *Id.* at 19:13–21. Similarly, the Asserted Patents refer to various components in Figures 3, 6, and 8 as optional or alternative features. *See id.* at 24:6–37, 32:35–59, 40:23–36.

111. Even if a POSA would understand one or more of the elements in Figure 2, 3, 6 or 8 to comprise a potential structure for performing the function recited by the means-for-providing terms, those figures depict the alleged invention as a set of block diagrams labeled with generic functions. As noted above, each of these components may be implemented with generic computer equipment, but would require special-purpose programming. In my opinion, the figures directed to block diagrams of the system do not disclose any algorithm or other adequate structure for performing the claimed function.

112. PANDA also cites to various figures depicting "process flow" diagrams. *See id.* at Figs. 4A–4B, 5A–5C, 7, 9A–9D, 11, 12. Although each diagram includes a series of steps, functions, or decisions, from my review these diagrams individually and as a whole would not sufficiently inform a POSA of an algorithm for performing the function of providing a copy of a live stream to a particular viewer client device via a specific video communication channel. Rather, the cited process flow diagrams are drafted in generic, high-level terms and concern such functionality as providing server access to a broadcaster (Figs. 4A–4B), uploading video streams to a database (Figs. 5A–5B), transcoding streams and queuing screenshots (Fig. 5C), viewer stream

source selection (Fig. 7), operation of the HLS server architecture (Fig. 9D), and operation of RTMP servers (Figs. 11A–11C, 12A–12C). As such, the process flow diagrams do not provide a sufficiently detailed algorithm for the claimed function.

113. PANDA also cites to portions of the specification, including the entirety of two separate "inventive example" systems, *id.* at 9:16–10:43, which include media servers in addition to numerous other elements, including control servers, socket servers, and web servers. A POSA would not be able to determine which, if any of those potential structures are intended to be the means for providing the first copy to the first viewer client device via a first video communication channel. Even so, the operations of the various servers in Asserted Patents are described in no greater detail than the claimed functionality. For example, the specification states that the media sources "provide the copy" a live stream to a viewer client device via a "video Internet communication channel," but that simply paraphrases the claim language. *Id.* at 21:21–36. The specification also states that "RTMP CDN servers essentially make further copies" of live streams "and pass on the respective further copies to multiple viewers," *id.* at 26:3–7, but the Asserted Patents provide no disclosure of how the RTMP CDN servers provide a copy of a live stream to a specific viewer over a particular channel. Similarly, the specification refers to the "ability to flexibly select the source of a copy of a broadcaster's live stream to be provided to respective multiple viewers from one of a number of possible media sources," including certain servers identified above, *id.* at 27:30–52, but the Asserted Patents do not explain how the source of the copy is selected or how such selection is accomplished. The specification's description of providing access to different live streams depending on whether the client is mobile or web-based, *id.* at 30:54–31:22, also does not indicate how such copies of live streams are to be provided to the client over a particular channel. And the "video uploader" and "server monitor" processes are

described in the Asserted Patent in purely functional language without sufficient detail to inform a POSA of how to implement such features. *Id.* at 31:23–32:21.

114. PANDA also cites to disclosures relating to various exemplary protocols that the system "may" use, including H.264 MPEG-4 AVC, RTMP, WebRTC, VP8, ABR, HLS, MSS, HDS, or MPEG-DASH. *See id.* at 15:30–58, 18:7–19, 21:21–36, 25:46–26:18, 27:30–51, 28:5–40; 30:54-31:22. As a POSA would appreciate, although these protocols may be used for various purposes, including the encoding, compression, and transmission of video over the Internet, in my opinion the mere disclosure of a protocol as an option for implementing a function would not inform a POSA of the specific functionality being claimed. In particular, to perform the claimed function using one or more of the protocols disclosed in the Asserted Patents, a POSA would need to be informed of numerous settings, parameters, configurations, and server and client source code in order to program a general-purpose computer to perform those functions. *See generally*, Apple Inc., "HTTP Live Streaming Overview" (GS_00001382) ("HLS Overview").

115. Relatedly, PANDA cites to portions of a section of the specification titled "HTTP Live Streaming (HLS) Server Architecture" as part of the structure it contends performs the recited function of providing a copy of a live stream of digital content to a viewer client device via a communication channel. Notably, the HLS Server Architecture section of the Asserted Patents span ***thirteen columns*** of text, *see generally id.* at 33:21–45:19, whereas PANDA has identified only a subset of the section. Nonetheless, based on my review of the disclosed HLS Server Architecture, I disagree that such disclosures provide adequate structure for the claimed function.

116. In particular, the Asserted Patents describe HLS as a "conventional HTTP-based media streaming communications protocol." *Id.* at 33:34–41. As a POSA would appreciate, and consistent with the use of generic servers in the Asserted Patents, the HLS protocol facilitates

sending video streams from any "ordinary web server." HLS Overview, at 1. Like the media servers described above, the various HLS servers in the Asserted Patents are described in generic and optional terms. *See, e.g.*, '697 Patent at 40:23–61.

117. Further, a POSA familiar with HLS would recognize the majority of disclosures in the Asserted Patents concerning HLS to simply describe various capabilities of the HLS protocol, rather than any particular implementation of specific functionality using HLS. *See, e.g.*, '697 Patent at 33:34–55 (describing how HLS segments and chunks video streams, but without providing any specific segmentation or chunk settings), 34:34–61 (same), 33:56–8 (how HLS caches and keyframes live streams, but no specific settings provided), 34:9–33 (how HLS transcodes video at different frame rates and resolutions, without providing specific frame rate or resolution settings), 34:62–35:8 (same), 35:9–36:14 (HLS buffering capabilities providing exemplary ranges, without specific settings), 41:10–44:35 (capabilities of a HLS CDN, but no specific structure or algorithm).

118. From my review of the disclosures cited by PANDA, the only specific settings provided that arguably relate to the claimed function are a "keyframe interval for transcoded copies of the live stream," which "may be set to 30 frames," a "target video segment duration," which "may be set to two seconds," and an "HLS window/buffer length," which "may be set to from four to six segments in a chunklist." '697 Patent at 40:5–22. Notably, each of these settings is described in optional terms ("may be set"), but even if a POSA viewed these settings as relevant to the structure or algorithm for performing the function of providing a copy of a live stream to a viewer client device via a video communication channel, those settings do not disclose adequate structure for the entire function. PANDA also cites to disclosures that the Asserted Patents refer to as an "example of a chunklist that includes six pointers to corresponding .ts files representing HLS video

segments" and an "example of an HLS playlist file." *See id.* at cols. 36–37. However, the exemplary settings provided in those files does not provide a POSA with sufficient information to program a general-purpose computer or server to perform the claimed function. As I explained above, a general-purpose computer would need to be programmed to handle numerous tasks to perform the claimed function. In my opinion, the exemplary selection of a keyframe interval, target video segment duration, HLS window/buffer length, and chunklist and playlist settings would not be sufficient to program a general-purpose computer or server system to perform the entire function recited by the means-for-providing terms.

119. Even if the disclosures cited by PANDA can be said to provide any structure for performing the function recited by the means-for-providing terms, based on my review of the Asserted Patents such structures are not clearly linked to or associated with the claimed function. For example, PANDA cites disclosures for the entirety of the "servers/memory storage devices" system, *see* '697 Patent at 9:16-10:43, 19:7–37, but that system includes, in addition to media sources, a control server, socket servers, web servers, and other components. This conclusion is underscored by the fact that PANDA appears to have selectively included some disclosures relating to the "media source" hardware while excluding others.

120. Moreover, other portions of the specification that PANDA has not identified concern the "media source[s]" or related servers that PANDA contends provide the structure for the claimed function, including additional disclosures relating to the HLS server architecture. *See, e.g.*, '697 Patent at 38:47–39:33, 40:62–41:9, 44:36–45:19.

121. A POSA would furthermore not necessarily view the "media sources" and their constituent elements as the only potential structures that relate to the function of providing a copy of a live stream to a viewer client device via a video communication channel. For example, the

Asserted Patents describe the entire "system 1000," including the control server, socket server, and web server, as "providing" copies of live streams of digital content to viewer client devices. '697 Patent at 9:16–43, 18:45–19:6. A POSA would therefore have no basis for limiting the structure for performing this function to the "media sources," but would also look to one or more of the other servers, which the Asserted Patents note can be included in "multiple ways" including on a "single computer or distributed among multiple computers." *Id.* at 54:39–45. Based on these disclosures, it is my opinion that the structures identified by PANDA in the Asserted Patents are not clearly linked to or associated with the function recited by the means-for-providing terms.

122. In sum, because the specification describes functions without describing adequate structure to perform those functions (such as an algorithm to be performed on general-purpose hardware or software), let alone one that is clearly linked to the claimed function, it is therefore my understanding that the means-for-providing terms are indefinite.

2. "Means for Retrieving" Terms

Terms	Genius Sports' Construction	PANDA's Construction
"means for periodically retrieving, via the Internet and from an event information provider, first event information germane to a first live sporting event" ('697 Pat. cl. 27, 29)	Subject to § 112(f); indefinite	Subject to § 112(f); not indefinite. Functions: periodically retrieving, via the Internet and from an event information provider, first event information germane to a first live sporting event. Structure: a control server that implements the algorithms described in FIGs. 2, 3, 15, and 16A-16B, and accompanying disclosures, including 9:16-10:43; 14:64-15:29; 17:24-45; 19:38-63; 21:37-52; 24:6-37; 27:5-27;

Terms	Genius Sports' Construction	PANDA's Construction
		45:20-48:8 of the '697 Patent, and equivalents thereof.
"means for retrieving, via the Internet, first event information germane to a first live sporting event" ('687 Pat. cl. 27, 29)	Subject to § 112(f); indefinite	Subject to § 112(f); not indefinite. Function: retrieving, via the Internet, first event information germane to a first live sporting event. Structure: a control server that implements the algorithms described in FIGs. 2, 3, 15, and 16A-16B, and accompanying disclosures, including 9:16-10:43; 14:64-15:29; 17:24-45; 19:38-63; 21:37-52; 24:6-37; 27:5-27; 45:20-48:8 of the '697 Patent, and equivalents thereof.

123. In sum, because the specification describes functions without describing adequate structure to perform those functions (such as an algorithm to be performed on general-purpose hardware or software), let alone one that is clearly linked to the claimed function, it is therefore my understanding that the means-for-providing terms are indefinite.

124. Claim 27 of the '697 Patent recites a "system for providing a first copy of a first broadcaster's live stream of digital content including first live sporting event video-based commentary from a first broadcaster client device to a first viewer client device" comprising, among other elements, "means for periodically retrieving, via the Internet and from an event information provider, first event information germane to a first live sporting event." Claim 27 of the '687 Patent similarly recites a "system for providing, to a first viewer client device, a first copy of a first live stream of digital content relating to a first live sporting event" comprising, among

other elements, "means for retrieving, via the Internet, first event information germane to a first live sporting event."[5] I may refer to these terms together as the "means-for-retrieving" terms.

125. I understand that PANDA contends the specified functions are "periodically retrieving, via the Internet and from an event information provider, first event information germane to a first live sporting event," and "retrieving, via the Internet, first event information germane to a first live sporting event," which are the same functions recited by the claims, respectively. I have taken PANDA's proposed functions into account when evaluating the disclosures PANDA contends provide adequate structure for performing these functions.

126. I have considered PANDA's proposed structure for these functions, which is identical for all instances of the term: "a control server that implements the algorithms described in FIGs. 2, 3, 15, and 16A–16B, and accompanying disclosures, including 9:16–10:43; 14:64–15:29; 17:24–45; 19:38–63; 21:37–52; 24:6–37; 27:5–27; 45:20–48:8 of the '697 Patent, and equivalents thereof."[6]

127. I disagree that the control server described in the Asserted Patents discloses adequate structure for performing the claimed function of "retrieving" / "periodically retrieving" first event information germane to a first live sporting event. The specification states that the system claimed may be implemented "using hardware, software, or a combination thereof,"

---

[5] Claim 29 of the '697 Patent and claim 29 of the '687 Patent (both of which depend from claim 27 of their respective patents) recite the same "means for retrieving …" and "means for periodically retrieving …," respectively. Unless otherwise noted, my analysis set forth herein applies equally to the disputed term as used in all four claims.

[6] PANDA refers to unspecified "equivalents" of the cited disclosures, but has not identified or explained the scope of the structures or algorithms it contends are equivalent. I therefore reserve the right to respond with additional analysis and opinion if PANDA is later permitted to identify alleged equivalents.

wherein "code can be executed on any suitable processor or collection of processors, whether provided in a single computer or distributed among multiple computers." *Id*. at 54:40–45. The Asserted Patents also state that any of the servers described in the specification, including a control server, may be implemented using generic components such as "processors," "memory devices," and "communication interfaces." *Id.* at 19:38–63, 54:39–56:3.

128. Furthermore, in my opinion, the claimed function could not be performed by a general-purpose computer without special programming. In particular, to accomplish the function of retrieving first event information germane to a first live sporting event, such programming would have to include at least identifying the event information to be retrieved, determining what event the event information relates to, determining what event provider is capable of providing event information based on the type of event, establishing a connection with the event information provider, decoding and interpreting the event information, identifying where to store the event information, determining a format for storing the event information, and storing the event information in the appropriate location. Each of these tasks would require numerous discrete routines, functions, or steps that would need to be implemented in software or configurations.

129. Based on my review of the specifications of the Asserted Patents, I did not find any structural or algorithmic description of how to perform the claimed specific functions on a general-purpose computer.

130. My review of PANDA's cited disclosures confirms my opinion that the Asserted Patents provide no such algorithm or structural description of how to perform the claimed specific function on a general-purpose computer. First, PANDA identifies certain figures (shown below) that consist of block diagrams including a "Control Server" among other elements.

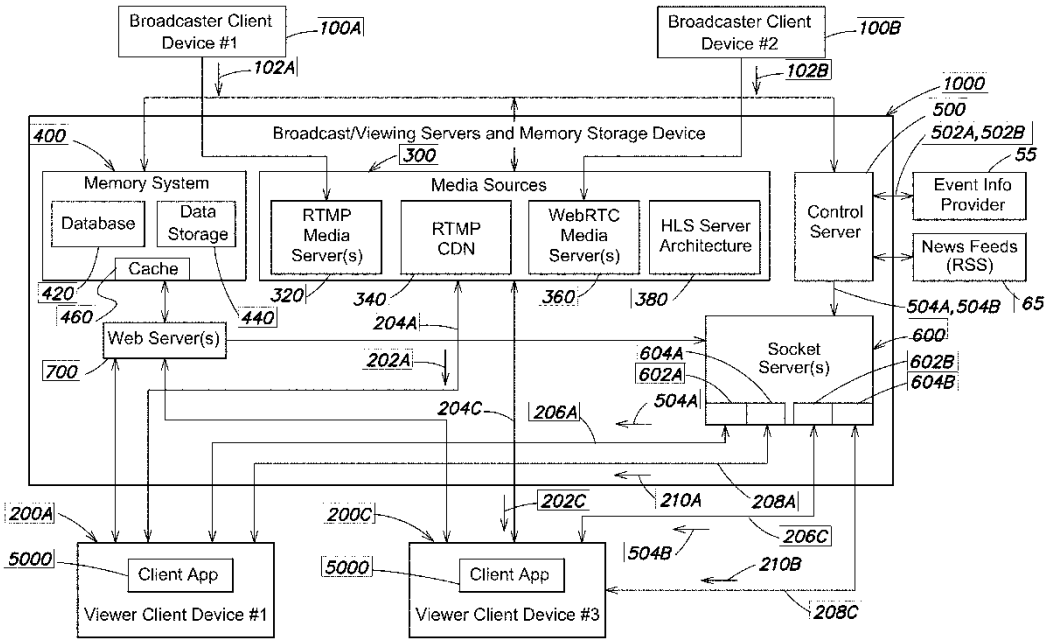

’697 Patent at Fig. 2.

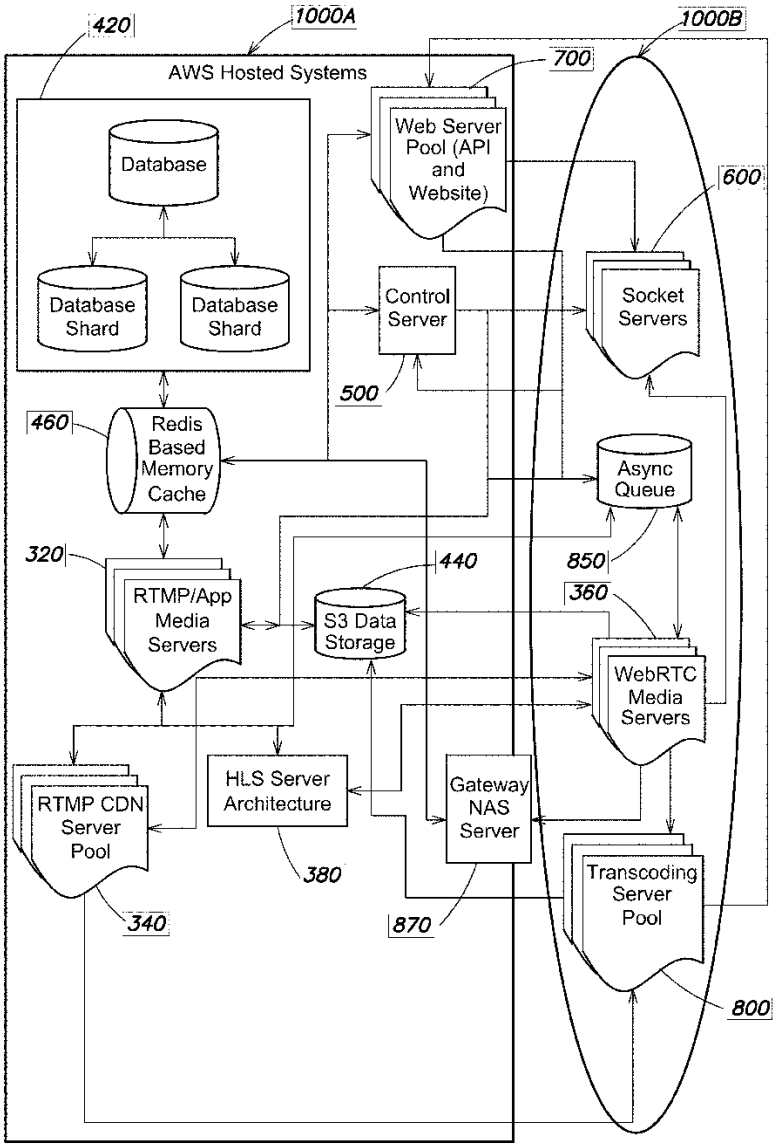

Id. at Fig. 3.

131. Further, the Asserted Patents describe the control server in open-ended language. The specification describes the control server as "implement[ing] a number of services/processes that govern functionality of other servers and devices in the servers/memory storage devices." *Id.* at 19:49–52. In addition to the "event data ingress service" of Figure 15 and the "live event data monitor process" of Figure 16, the specification contemplates other examples of control services/processes, including, but not limited to: an RTMP media server scaling process (Figure

11), an RTMP CDN of the media sources (Figure 12), a live stream and media server watchdog process (Figures 13–14), an asynchronous task processor (Figure 17), and a live stream thumbnail/screenshot acquisition process (Figure 18). *Id.* at 19:49–63; *see also id.* at 24:6–37.

132. Even if a POSA would understand one or more of the elements in Figures 2 and 3 to comprise a potential structure for performing the function recited by the means-for-retrieving terms, those figures depict the alleged invention as a set of block diagrams labeled with generic functions. As noted above, each of these components may be implemented with generic computer equipment, but would require special-purpose programming. In my opinion, the figures directed to block diagrams of the system do not disclose any algorithm or other adequate structure for performing the claimed function.

133. PANDA also cites to various figures depicting "process flow" diagrams. *See id.* at Figs. 15, 16A–16B. Although each diagram includes a series of steps, functions, or decisions, from my review these diagrams individually and as a whole would not sufficiently inform a POSA of an algorithm for performing the function of retrieving event information germane to a live sporting event. Rather, the cited process flow diagrams are drafted in generic, high-level terms that do not provide any details concerning the implementation of receiving and storing event data.

134. In my opinion, the flow charts of Figures 15 and 16 merely recite the functionality of the service without disclosing how the service achieves the desired result. In Figure 15, the flow chart includes boxes which recite the functions of "SERVICE: Event Data Ingress," "Retrieve Event Information for One or More Events (e.g., STATS LLC)," "Store Basic Event Data (Type, Id, Status)," "Normalize and Store More Detailed Event Information (Quarter, Inning, Half, etc.)," "Normalize and Store Event Date (Converting from UTC to EST/EDT)," and "Normalize and Store Event Participate (e.g., Team) Data." *Id.* at Fig. 15. Figures 16A and 16B similarly include

boxes that recite various functions. *Id.* at Figs. 16A–16B (reciting, *e.g.*, "Retrieve List of Events for 48 Hour Window," "Store Basic Event Data (Type, Id, Status)," "Update Event Information (e.g., Score Data)," etc.). There is no disclosure provided in the flow chart or the specification, however, that explains how to achieve any of these functions or what structure might be used to do so. As such, the process flow diagrams do not provide a sufficiently detailed algorithm or other structure for the claimed function.

135. PANDA also cites to portions of the specification, including the entirety of two separate "inventive example" systems, *id.* at 9:16–10:43, which include control servers in addition to numerous other elements, including media servers, socket servers, and web servers. A POSA would not be able to determine which, if any structures are meant to be the means for retrieving event information germane to a live sporting event.

136. The descriptions PANDA identifies, moreover, are merely functional. *See, e.g.*, '697 patent at 17:24–45 (describing populating a database to provide a director of live events); 21:37–52 (describing retrieving event information); 46:50–60 (describing collecting, maintaining, and distributing event information); 27:5–27 (describing broadly that in some implementations a "single control server" gathers and parses live event information in real-time); 46:61–47:11 (same); 47:12–25 (describing broadly that in some implementations the control server implements an event data ingress service and a live event data monitor service). There is no disclosure of how the data is obtained, the format it is stored in, or the mechanisms by which that collection, maintenance, and distribution is achieved. Nor is there disclosure of how the functions of gathering, parsing, ingress, and monitoring are achieved or what structure might be used to do so.

137. Even if the disclosures cited by PANDA can be said to provide any structure for performing the function recited by the means-for-retrieving terms, based on my review of the

Asserted Patents such structures are not clearly linked to or associated with the claimed function. For example, PANDA cites disclosures for the entirety of the "servers/memory storage devices" system, *see* '697 Patent at 9:16–10:43, 19:7–37, but that system includes, in addition to a control server, media sources, socket servers, web servers, and other components.

138. Moreover, numerous other portions of the specification that PANDA has not identified concern the "control server" that PANDA contends provides the structure for the claimed function. *See, e.g.*, '697 Patent at 11:50–12:3, 12:12–19, 19:64–20:11, 31:52–58, 48:10–53, 50:36–56, Figs. 10, 22A–22B, 23B, 24B (describing exemplary uses of a control server in the system of the Asserted Patents). This underscores that a POSA would not view PANDA's selected disclosures as structures that are clearly linked to or associated with the recited function.

139. Further, a POSA would not necessarily view the "control server" as the only potential structure that relates to the function of retrieving event information germane to a live sporting event. For example, the Asserted Patents describe the entire "broadcast/viewing servers and memory storage devices," including the media sources, socket server, and web server, as "retriev[ing]" various event information. '697 Patent at 15:22–29. A POSA would therefore have no basis for limiting the structure for performing this function to the "control server," but would also consider one or more of the other servers, which the Asserted Patents note can be included in "multiple ways" including on a "single computer or distributed among multiple computers." *Id.* at 54:39–45. Based on these disclosures, it is my opinion that the structures identified by PANDA in the Asserted Patents are not clearly linked to or associated with the function recited by the means-for-retrieving terms.

140. In sum, because the specification describes functions without describing adequate structure to perform those functions (such as an algorithm to be performed on general-purpose

hardware or software), let alone one that is clearly linked to the claimed function, it is therefore my understanding that the means-for-retrieving terms are indefinite.

3. "Means for Transmitting" Terms

Terms	Genius Sports' Construction	PANDA's Construction
"means for transmitting the first score information to at least the first viewer client device via a first event information communication channel that is different from the first video communication channel" ('697 Pat. cl. 27)	Subject to § 112(f); indefinite	Subject to § 112(f); not indefinite. Function: transmitting the first score information to at least the first viewer client device via a first event information communication channel that is different from the first video communication channel. Structure: a socket of a socket server that implements the algorithms described in FIGs. 2, 3, 21A-21E, and accompanying disclosures, including 5:29-44; 9:16-10:43; 19:64-20:61; 21:37-22:67; 23:20-45; 26:50-27:27; 29:25-43; 46:61-47:11; 51:27-49; 53:21-37 of the '697 Patent, and equivalents thereof.
"means for transmitting the first event information to at least the first viewer client device via a first event information communication channel that is different from the first video communication channel" ('687 Pat. cl. 27)	Subject to § 112(f); indefinite	Subject to § 112(f); not indefinite. Function: transmitting the first event information to at least the first viewer client device via a first event information communication channel that is different from the first video communication channel. Structure: a socket of a socket server that implements the algorithms described in FIGs. 2, 3, 21A-21E, and accompanying disclosures, including 5:29-44; 9:16-10:43;

Terms	Genius Sports' Construction	PANDA's Construction
		19:64-20:61; 21:37-22:67; 23:20-45; 26:50-27:27; 29:25-43; 46:61-47:11; 51:27-49; 53:21-37 of the '697 Patent, and equivalents thereof.

141. Claim 27 of the '697 Patent recites a system comprising "means for transmitting the first score information to at least the first viewer client device via a first event information communication channel that is different from the first video communication channel." Claim 27 of the '687 Patent recites a system comprising "means for transmitting the first event information to at least the first viewer client device via a first event information communication channel that is different from the first video communication channel." I may refer to these terms together as the "means-for-transmitting" terms.

142. The means-for-transmitting terms are identical except that the '687 Patent substitutes "score information" with "event information." Unless otherwise noted, this distinction is not material to my analysis, as "score information" is an example of "event information" according to the specification of the Asserted Patents. *See, e.g.*, '697 Patent at 4:47–50.

143. I understand that PANDA contends the specified function for the means-for-transmitting terms is "transmitting the first score information to at least the first viewer client device via a first event information communication channel that is different from the first video communication channel" for the '697 Patent and "transmitting the first event information to at least the first viewer client device via a first event information communication channel that is different from the first video communication channel" for the '687 Patent, which are the same functions recited by the claims (and are identical except for the substitution of "event information"

for "score information"). I have taken PANDA's proposed function into account when evaluating the disclosures PANDA contends provide adequate structure for performing this function.

144. I have considered PANDA's proposed structure for this function, which is identical for all instances of the term: "a socket of a socket server that implements the algorithms described in FIGs. 2, 3, 21A-21E, and accompanying disclosures, including 5:29-44; 9:16-10:43; 19:64-20:61; 21:37-22:67; 23:20-45; 26:50-27:27; 29:25-43; 46:61-47:11; 51:27-49; 53:21-37 of the '697 Patent, and equivalents thereof."[7]

145. I disagree that a socket of a socket server as described in the Asserted Patents discloses adequate structure for performing the claimed function of "transmitting" score or event information to a particular viewer client device via a specific "event information communication channel that is different from" another "video communication channel." As I explain above in Section VII.A, a "socket" is a well-known component of Internet protocols such as TCP/IP. As such, a socket by itself does not have any particular functionality other than providing a network communication endpoint that is identified by port number and network address. In order to perform the functions recited by the claims, the socket would need to be used in conjunction with other software.

146. Further, the "socket server" of the Asserted Patents may be implemented using generic components such as "processors," "memory devices," and "communication interfaces." *Id.* at 54:39–56:3. The socket server that PANDA identifies as the structure corresponding to the claimed function would be understood by a POSA as a general-purpose computer.

---

[7] PANDA refers to unspecified "equivalents" of the cited disclosures, but has not identified or explained the scope of the structures or algorithms it contends are equivalent. I therefore reserve the right to respond with additional analysis and opinion if PANDA is later permitted to identify alleged equivalents.

147. In my opinion, however, the claimed function could not be performed by a general-purpose computer without special programming. In particular, to accomplish the function of transmitting score or event information to a viewer client device via a specific communication channel, such programming would have to include at least identifying the event to which the score or event information pertains, determining the viewer client device to which the score or event information should be transmitted, identifying and/or setting up the channel over which the score or event information should be transmitted, encoding or formatting the score or event information for transmission, and transmitting the score or event information via the correct channel to the correct viewer. Each of these tasks would require numerous discrete routines, functions, or steps that would need to be implemented in software or configurations.

148. Based on my review of the specifications of the Asserted Patents, I did not find any structural or algorithmic description of how to perform the claimed specific functions on a general-purpose computer.

149. My review of PANDA's cited disclosures further confirms my opinion that the Asserted Patents provide no such algorithm or structural description of how to perform the claimed specific function on a general-purpose computer. First, PANDA identifies certain figures that consist of block diagrams including "Socket Server(s)" among other numerous other components. *See* '697 Patent at Figs. 2, 3. Those block diagrams are labeled with generic functions, and each component, including the socket server, may be implemented with generic computer equipment but would require special-purpose programming. *See* '697 Patent at 54:39–56:3. In my opinion, the figures directed to block diagrams of the system do not disclose any algorithm or other adequate structure for performing the claimed function.

150. PANDA also cites to various figures depicting "process flow" diagrams, which concern a "mobile broadcaster active stream process." *See id.* at Figs. 21A-E, 12:31–35. Although each diagram includes a series of steps, functions, or decisions, from my review these diagrams individually and as a whole would not sufficiently inform a POSA of an algorithm for performing the function of transmitting score or event information to a particular viewer client device via a specific communication channel. Rather, the cited process flow diagrams are drafted in generic, high-level terms and concern such generic functionality as connecting to a socket (Fig. 21A), updating various event statues (Fig. 21B), video or graphics/animation updates (Fig. 21C), handling different media server streaming states (Fig. 21D), and updating a current viewers list, interacting with graphics/animation, or switching camera source (Fig. 21E). Notably, the only references to a "socket" in any of the process flow diagrams (in Fig. 21A) indicate that the process flow relates to the ***broadcaster's*** connection to a socket for transmitting "chat/system event" information, not the use of a socket to transmit score or event information to a viewer client device. *See id.* at Fig. 21A. As such, the process flow diagrams do not provide a sufficiently detailed algorithm or other structure for the claimed function.

151. PANDA also cites to portions of the specification, including the entirety of two separate "inventive example" systems, *id.* at 9:16–10:43, which include socket servers in addition to numerous other elements, including media sources, control servers, and web servers. A POSA would not be able to determine which, if any of those potential structures are intended to be the means for transmitting the first score or event information to at least the first viewer client device via a first event information communication channel that is different from the first video communication channel. Even so, the operations of the various servers in Asserted Patents are described in no greater detail than the claimed functionality. For instance, the specification states

that an "'event information' Internet communication channel" is used "between a particular socket of a socket server and the client device" to "convey[] the event information" but provides no additional detail regarding its structure or operation. *Id.* at 5:29–44; *see also id.* at 26:50–27:27, 29:25–43. The specification similarly states that a socket of the socket server "facilitate[s] communication" of event information to viewer client devices, for example by sending "event messages" carried on channels in the form of packets, but those disclosures do not inform a POSA of how to implement a socket of a socket server to do so. *Id.* at 19:64–20:61. Likewise, the specification states that a viewer may "connect to" a socket of a socket server, but does not disclose how to implement the transmission of score information to the viewer client device. *Id.* at 23:20–45; 51:27–49, 53:21–37. Moreover, the references to sockets, channels, and packets are wholly generic and would not inform a POSA of any particular implementation of software employing those elements.

152. Importantly, none of the disclosures cited by PANDA relating to a socket of a socket server include any "algorithms" that the socket implements. Rather, those disclosures merely describe exemplary functions or goals without any detail that would inform a POSA of how to program a general-purpose computer to accomplish those functions or goals. *See, e.g.*, *id.* at 26:50–27:4 (viewers "connect to one or more sockets of a socket server … such that all live streams relating to the event are similarly synchronized to event information"), 53:21–37 (the viewer client devices "connects to the appropriate socket of the socket server(s)" to "receive event messages containing various event information"). I understand that such high-level functional descriptions of what the various components do, without any explanation of how the functions are accomplished or what algorithm can be used to do so, do not provide adequate structure for a claimed function.

153. PANDA also cites to disclosures regarding the exemplary operation of servers other than the socket server, such as the control server and web server(s). *See id.* at 21:37–22:67, 46:61–47:11. Such disclosures similarly provide minimal detail to a POSA as to the implementation of the systems, which are described in generic terms. Moreover, even if the disclosures cited by PANDA can be said to provide any structure for performing the function recited by the means-for-transmitting terms, based on my review of the Asserted Patents such structures are not clearly linked to or associated with the claimed function. Rather, PANDA has cited to disclosures involving numerous separate components other than the "socket of a socket server" it contends provides the necessary structure, underscoring that a POSA would not be able to determine which structure (if any) corresponds to the claimed function. Based on these disclosures, it is my opinion that the structures identified by PANDA in the Asserted Patents are not clearly linked to or associated with the function recited by the means-for-providing terms.

154. In sum, because the specification describes functions without describing adequate structure to perform those functions (such as an algorithm to be performed on general-purpose hardware or software), let alone one that is clearly linked to the claimed function, it is therefore my understanding that the means-for-transmitting terms are indefinite.

4. "Means for Transmitting and Receiving" Terms

Terms	Genius Sports' Construction	PANDA's Construction
"means for transmitting and receiving first chat information regarding the first live sporting event video-based commentary included in the first broadcaster's live stream of digital content via at least one first chat/system event Internet communication channel that is different from the first video communication	Subject to § 112(f); indefinite	Subject to § 112(f); not indefinite. Functions: transmitting and receiving first chat information regarding the first live sporting event via at least one first chat/system event Internet communication channel that is different from the first video communication

Terms	Genius Sports' Construction	PANDA's Construction
channel and the first event information communication channel" ('697 Pat. cl. 28)		channel and the first event information channel. Structure: a socket of a socket server that implements the algorithms described in FIGs. 2, 3, 21A-21E, 22A-22B, 23A-23B, 24A-24B, and 25A-25C, and accompanying disclosures, including 5:29-44; 9:16-58; 19:64-20:61; 22:7-67; 23:46-24:5; 26:50-27:27; 29:44-30:29; 51:27-52:3; 52:47-62; 52:63-54:11 of the '697 Patent, and equivalents thereof.
"means for transmitting and receiving first chat information regarding the first live sporting event via at least one first chat/system event Internet communication channel that is different from the first video communication channel and the first event information channel" ('687 Pat. cl. 28)	Subject to § 112(f); indefinite	Subject to § 112(f); not indefinite. Functions: transmitting and receiving first chat information regarding the first live sporting event via at least one first chat/system event Internet communication channel that is different from the first video communication channel and the first event information channel. Structure: a socket of a socket server that implements the algorithms described in FIGs. 2, 3, 21A-21E, 22A-22B, 23A-23B, 24A-24B, and 25A-25C, and accompanying disclosures, including 5:29-44; 9:16-58; 19:64-20:61; 22:7-67; 23:46-24:5; 26:50-27:27; 29:44-30:29; 51:27-52:3; 52:47-62; 52:63-54:11 of the '697 Patent, and equivalents thereof.

155. Claim 28 of the ’697 Patent recites a system comprising “means for transmitting and receiving first chat information regarding the first live sporting event video-based commentary included in the first broadcaster’s live stream of digital content via at least one first chat/system event Internet communication channel that is different from the first video communication channel and the first event information communication channel.” Claim 28 of the ’687 Patent recites a system comprising “means for transmitting and receiving first chat information regarding the first live sporting event via at least one first chat/system event Internet communication channel that is different from the first video communication channel and the first event information channel.” I may refer to these terms together as the “means-for-transmitting-and-receiving” terms.[8]

156. I understand that PANDA contends the specified functions for the means-for-transmitting-and-receiving terms are “transmitting and receiving first chat information regarding the first live sporting event via at least one first chat/system event Internet communication channel that is different from the first video communication channel and the first event information channel” for the ’697 Patent and “transmitting and receiving first chat information regarding the first live sporting event via at least one first chat/system event Internet communication channel that is different from the first video communication channel and the first event information channel” for the ’687 Patent, which are the same functions recited by the claims. I have taken PANDA’s proposed functions into account when evaluating the disclosures PANDA contends provide adequate structure for performing this function.

157. I have considered PANDA’s proposed structure for this function, which is identical for all instances of the term: “a socket of a socket server that implements the algorithms described

---

[8] Although the wording of these two terms is not identical, unless otherwise noted the differences are not material to my analysis.

in FIGs. 2, 3, 21A-21E, 22A-22B, 23A-23B, 24A-24B, and 25A-25C, and accompanying disclosures, including 5:29-44; 9:16-58; 19:64-20:61; 22:7-67; 23:46-24:5; 26:50-27:27; 29:44-30:29; 51:27-52:3; 52:47-62; 52:63-54:11 of the '697 Patent, and equivalents thereof."[9]

158. As discussed in Section IV.D.3, above, and for the same reasons, I disagree that a socket of a socket server as described in the Asserted Patents discloses adequate structure for performing the claimed function. A "socket" by itself does not convey any particular functionality other than providing a network communication endpoint that is identified by port number and network address, and a "socket server" is simply a generic server that would require special programming. *See* '697 Patent at 54:39–56:3.

159. In particular, to accomplish the function of transmitting and receiving chat information regarding a specific first live sporting event via a particular chat/system event Internet communication channel that is different from a video communication channel and an event information channel, such programming would have to include at least identifying the event to which the chat information pertains, determining the source or destination device to or from which the chat information should be transmitted, identifying and/or setting up the channel over which the chat information should be transmitted such that it is distinct from other channels, encoding or formatting the chat information for transmission or decoding or interpreting the chat information when received, and transmitting or receiving the chat information via the correct channel to or from the correct source. Each of these tasks would require numerous discrete routines, functions, or steps that would need to be implemented in software or configurations.

---

[9] PANDA refers to unspecified "equivalents" of the cited disclosures, but has not identified or explained the scope of the structures or algorithms it contends are equivalent. I therefore reserve the right to respond with additional analysis and opinion if PANDA is later permitted to identify alleged equivalents.

160. Based on my review of the Asserted Patents in general and of PANDA's cited disclosures in particular, it is my opinion that the Asserted Patents provide no such algorithm or structural description of how to perform the claimed specific function on a general-purpose computer. PANDA cites to largely the same disclosures as the proposed structure for the means-for-transmitting terms above. *See* '697 Patent at Figs. 2, 3, 21A–21E, 5:29–44, 9:16–58, 19:64–20:61, 22:7–67, 26:50–27:27, 51:27–49. As explained above, those disclosures do not provide an algorithm to be implemented by a socket of a socket server for performing the functionality of transmitting score or event information via a particular communication channel. For the same reasons and based on the same analysis, it is my opinion that those disclosures do not provide an algorithm for performing the recited function here, namely transmitting and receiving chat/information via a particular communication channel.

161. PANDA also cites to various figures depicting "process flow" diagrams and associated description of the same diagrams in narrative form. *See id.* at Figs. 22A–22B, 23A–23B, 24A–24B, 25A–25C; 52:47–54:11. Although each diagram includes a series of steps, functions, or decisions, from my review these diagrams individually and as a whole would not sufficiently inform a POSA of an algorithm for performing the function of transmitting score or event information to a particular viewer client device via a specific communication channel. Rather, the cited process flow diagrams are drafted in generic, and the only references to a "socket" in any of the process flow diagrams merely indicate that a viewer connects to a socket and receives chat/system event information. *Id.* As such, the process flow diagrams do not provide a sufficiently detailed algorithm or other structure for the claimed function.

162. PANDA cites to additional portions of the specification, but those disclosures do not include any algorithms for performing the function recited by the means-for-transmitting-and-

receiving terms. For example, the specification states that viewer client devices are "connected to different chat/system event sockets" and thereafter chat information is transmitted to the client devices over a channel. *Id.* at 23:46–24:5; *see also id.* at 29:44-30:29, 51:50–52:3. These references to sockets and channels are wholly generic and would not inform a POSA of any particular implementation of software employing those elements. None of these disclosures include any "algorithms" for a generic socket or socket server to implement. Rather, those disclosures merely describe exemplary functions or goals without any detail that would inform a POSA of how to program a general-purpose computer to accomplish those functions or goals.

163. For those reasons, the specification merely describes functions without disclosing adequate structure to perform those functions (such as an algorithm to be performed on general-purpose hardware or software), and it is thus my understanding that the means-for-transmitting-and-receiving terms are indefinite.

5. "Means for Updating" Terms

Terms	Genius Sports' Construction	PANDA's Construction
"means for updating the first score information and queueing an asynchronous message including the updated first score information for transmission on the first event information communication channel" ('697 Pat. cl. 29)	Subject to § 112(f); indefinite	Subject to § 112(f); not indefinite. Functions: updating the first score information and queueing an asynchronous message including the updated first score information for transmission on the first event information communication channel. Structure: a control server that implements the algorithms described in FIGs. 2, 3, 10, 16A-16B, 17A-17B, and 22A-22B, and accompanying disclosures, including 24:6-37; 47:41-48:53; 52:47-62 of the

Terms	Genius Sports' Construction	PANDA's Construction
		'697 Patent, and equivalents thereof.
"means for updating the first event information and queueing an asynchronous message including the updated first event information for transmission on the first event information communication channel" ('687 Pat. cl. 29)	Subject to § 112(f); indefinite	Subject to § 112(f); not indefinite. Functions: updating the first event information and queueing an asynchronous message including the updated first event information for transmission on the first event information communication channel. Structure: a control server that implements the algorithms described in FIGs. 2, 3, 10, 16A-16B, 17A-17B, and 22A-22B, and accompanying disclosures, including 24:6-37; 47:41-48:53; 52:47-62 of the '697 Patent, and equivalents thereof.

164. Claim 29 of the '697 Patent recites the system of claim 27 wherein the "means for periodically retrieving" (addressed above) further includes "means for updating the first score information and queueing an asynchronous message including the updated first score information for transmission on the first event information communication channel." Claim 29 of the '687 Patent similarly recites the system of wherein the "means for retrieving" (also addressed above) further includes "means for updating the first event information and queueing an asynchronous message including the updated first event information for transmission on the first event information communication channel." I may refer to these terms together as the "means-for-updating" terms.

165. The means-for-updating terms are identical except that the ’687 Patent substitutes “score information” with “event information” in certain instances. Unless otherwise noted, this distinction is not material to my analysis, as “score information” is an example of “event information” according to the specification of the Asserted Patents. *See, e.g.*, ’697 Patent at 4:47–50.

166. I understand that PANDA contends the specified functions for the means-for-updating terms are “updating the first score information and queueing an asynchronous message including the updated first score information for transmission on the first event information communication channel” for the ’697 Patent and “updating the first event information and queueing an asynchronous message including the updated first event information for transmission on the first event information communication channel” for the ’687 Patent, which are the same functions recited by the claims (and are identical except for the substitution of “event information” for “score information” in certain instances). I have taken PANDA’s proposed functions into account when evaluating the disclosures PANDA contends provide adequate structure for performing these functions.

167. Notably, the means-for-updating terms recite at least two distinct functions: (1) “updating” the first score or event information, and (2) “queueing an asynchronous message” including the updated first score or event information “for transmission on the first event information communication channel.” It is my understanding that, for the means-for-updating terms to be definite, the specification must disclose adequate structure for the entirety of both functions.

168. I have considered PANDA’s proposed structure for these functions, which is substantially the same for both means-for-updating terms: “a control server that implements the

algorithms described in FIGs. 2, 3, 10, 16A-16B, 17A-17B, and 22A-22B, and accompanying disclosures, including 24:6-37; 47:41-48:53; 52:47-62 of the '697 Patent, and equivalents thereof."

169. I disagree that the control server described in the Asserted Patents disclose adequate structure for performing the claimed functions. The Asserted Patents state that any of the servers described in the specification may be implemented using generic components such as "processors," "memory devices," and "communication interfaces." *Id.* at 54:39–56:3. The control server that PANDA identifies as the structure corresponding to the claimed function would be understood by a POSA as a general-purpose computer.

170. In my opinion, however, the claimed functions could not be performed by a general-purpose computer without special programming. In particular, to accomplish the function of updating score or event information such programming would have to, for example, understand or determine what score or event information needs to be updated and how often, where to obtain updates to score or event information, whether the updated score or event information is accurate, what event the score or event information relates to, among other special purpose tasks. Similarly, to accomplish the function of queueing an asynchronous message including the updated score or event information for transmission on an event information communication channel, the programming would at least need to understand or determine a format for embedding score or event information in a message and identify the channel over which the score or event information should be transmitted, for example. Each of these tasks would require numerous discrete routines, functions, or steps that would need to be implemented in software or configurations.

171. Based on my review of the Asserted Patents in general and of PANDA's cited disclosures in particular, it is my opinion that the Asserted Patents provide no such algorithm or

structural description of how to perform the claimed specific function on a general-purpose computer.

172. First, PANDA identifies certain figures that consist of block diagrams including a control server among other numerous other components, as well as a high-level narrative description of one such figure. *See* '697 Patent at Figs. 2, 3, 10, 24:6–37. Those block diagrams are labeled with generic functions, and each component, including the socket server, may be implemented with generic computer equipment but would require special-purpose programming. *See* '697 Patent at 54:39–56:3. The Asserted Patents' description of Figure 3 also fails to provide any detail about the implementation of control server. *Id.* at 24:6–37. In my opinion, the figures directed to block diagrams of the system do not disclose any algorithm or other adequate structure for performing the claimed function.

173. PANDA also cites to various figures depicting "process flow" diagrams and associated description of the same diagrams in narrative form. *See id.* at Figs. 16A-16B, 17A-17B, and 22A-22B; 52:47-62. Although each diagram includes a series of steps, functions, or decisions, from my review these diagrams individually and as a whole would not sufficiently inform a POSA of an algorithm for performing the function of transmitting score or event information to a particular viewer client device via a specific communication channel. Rather, the cited process flow diagrams are drafted in generic, and the only references to a "socket" in any of the process flow diagrams merely indicate that a viewer connects to a socket and receives chat/system event information. *Id.* As such, the process flow diagrams do not provide a sufficiently detailed algorithm or other structure for the claimed function.

174. PANDA cites to additional portions of the specification, but those disclosures do not include any algorithms for performing the function recited by the means-for-transmitting-and-

receiving terms. For instance, the specification provides exemplary data elements for event information, but does not provide any detail as to how such information is updated or queued as an asynchronous message. *Id.* at 47:41–48:8.

175. The remaining disclosures cited by PANDA are not clearly linked to or associated with the function of "updating" score or event information or to "queueing an asynchronous message" including the updated first score or event information "for transmission on the first event information communication channel." Instead, the cited disclosures at most disclose generic processes for handling exemplary "asynchronous system events" such as starting a broadcast stream, adding new followers, and push notifications. *See, e.g.*, '697 Patent at 48:9–31, Figs. 17A–B. Further, certain disclosures have to do with the functioning of the ***client device***, not the control server that PANDA alleges provides the structure for the means-for-updating terms. *Id.* at 48:32–42. Additional disclosures relate to "monitoring" a queue of tasks, not queueing or transmitting messages including score or event information. *Id.* at 48:43–53. It is therefore my opinion that the cited disclosures cannot provide adequate structure for the second recited function, nor are they clearly linked to or associated with the function.

176. This conclusion is underscored by the fact that numerous other generic components throughout the specification refer to "updating" score or event information, but no one structure is clearly linked to or associated with the function recited by the means-for-updating terms. *See, e.g.*, '697 Patent at 14:49–63 ("Each of the client devices" in Fig. 1A may perform functionality including "collecting and maintaining/updating event information"); 47:12–25 (in "some example implementations" the "control server 500" uses a "live event data monitor service" to update event information).

177. Even if a POSA were to understand PANDA's cited disclosures to somehow relate to the functions of "updating" score or event information and "queueing" an asynchronous message including the updated score or event information for transmission on an event information communication channel, those disclosures do not provide an algorithm for performing the claimed function, nor any other adequate corresponding structure. At most, PANDA's cited disclosures disclose generic components such as a "control server" that "initiate[s] various other actions or processes in connection with the server and memory storage devices." *Id.* at 48:13–16. The Asserted Patents state that the "control server" that PANDA cites may be implemented using generic components such as "processors," "memory devices," and "communication interfaces." *Id.* at 54:39–56:3.

178. It is therefore my understanding that, because the specification describes functions without describing adequate structure to perform those functions (such as an algorithm to be performed on general-purpose hardware or software), the means-for-updating terms are indefinite.

E. Client-by-Client Latency Mitigation Terms

Terms	Genius Sports' Construction	PANDA's Construction
"provide a single synchronized update and mitigate client-by-client latency and/or synchronization issues" ('218 Pat. cl. 7)	Indefinite	Not indefinite; plain and ordinary meaning
"the first digital content received at the first client device and the second client device is synchronized and client-by-client latency between the first client device and second client device to render the first event information is thereby	Indefinite	Not indefinite; plain and ordinary meaning

mitigated or significantly reduced" ('088 Pat. cl. 1, 8)		

179. I have also considered the terms "provide a single synchronized update and mitigate client-by-client latency and/or synchronization issues" in claim 7 of the '218 patent and "the first digital content received at the first client device and the second client device is synchronized and client-by-client latency between the first client device and second client device to render the first event information is thereby mitigated or significantly reduced" in claims 1 and 8 of the '088 patent. I have focused on "client-by-client latency" and the claimed requirements that such latency be "mitigate[d]" or "significantly reduced."

180. As an initial matter, a POSA would understand "latency" in general to mean the time it takes for some information to be transmitted from its source to a destination. *See, e.g.*, Tanenbaum at 86 ("latency" is "how many seconds it takes for the first bit to get from the client to the server"). The choice of "source" and "destination" in this context will impact the measurement of latency. As a simple example, consider the data transmitted as part of a videoconferencing call involving two participants. There will be separate measures of latency resulting from: (a) the transmission of data from the first participant to the videoconferencing service, (b) the processing and routing of data within the videoconferencing service's systems, and (c) the transmission of data from the videoconferencing service to the second participant. Moreover, a POSA would appreciate that the sum of those three separate measures is itself a measure of latency (the "end-to-end" latency of the system). Hence, to accurately measure and compare latencies a POSA would need to be informed of the specific source and destination over which transmission time is to be measured.

181. Furthermore, a POSA would understand that latency can be measured either at a point in time (*e.g.*, by measuring the transmission and reception times of an individual packet) or as an average (or other statistical measure) over time. The period over which latency is measured will necessarily affect the resulting measurement.

182. In addition, the range of latencies that may be acceptable in any given situation varies depending on the type of data being transmitted. By some measures, for example, one-way latency of up to 150 milliseconds (ms) may be considered acceptable for Internet voice or video calls, whereas latency on the order of 5–10 seconds may be acceptable for a live sports event broadcast. *See* Tanenbaum at 726.

183. Furthermore, latency reduction does not come without tradeoffs, only some of which may be within the control of a POSA designing software or systems that run over a network. For example, using larger packet sizes is typically more bandwidth efficient but increases latency, and conversely using shorter packets to reduce latency generally comes at the cost of bandwidth efficiency. *See* Tanenbaum at 726. Likewise, there are latency tradeoffs when selecting buffer sizes: a smaller buffer reduces latency but may result in more loss due to jitter (*i.e.*, the variability in latency, which may cause pauses or skipping in streaming media), while a larger buffer usually results in a smoother experience for the viewer, but at the cost of longer latency. *Id.* at 726–27. In addition, the choice of compression will affect latency, both in terms of the computational complexity of the encoding and decoding processes as well as the resulting bandwidth consumption of the compressed information. *Id.* at 726.

184. Other contributors to latency may be outside the control of the designer of a software system. For example, the latency for a connection at any given time depends on the design or conditions of various local and wide-area networks over which data is being transmitted,

including the dynamically varying bandwidth demands of other users of the same networks, and the geographic locations of various servers and clients in the system. Tanenbaum at 726.

185. With that background, I have reviewed the Asserted Patents and have identified no objective guidance regarding what measure of latency should be applied to the claims at issue, nor what degree of mitigation or reduction would satisfy the claims. For the reasons below, it is my opinion that the Asserted Patents fail to provide any objective boundary to these claim terms that would allow a POSA to reasonably ascertain their scope, and the terms are therefore indefinite.

186. First, the Asserted Patents do not define "client-by-client latency" or indicate how such latency is to be measured in the context of the providing "online gaming information" or "digital content" relating to "event information" to viewer client devices as the claims at issue require. The Asserted Patents only define latency as the delay between generating a video stream for transmission and its reception for viewing. *See, e.g.*, '697 patent at 2:27–31 ("latency" is "the delay between a first user generating a live video stream for transmission via the Internet and a second user receiving a copy of the live video stream via the Internet for viewing").

187. Moreover, the Asserted Patents describe myriad alternative ways of measuring latency. *See, e.g.*, *id.* at 24:64–25:2 ("broadcaster-to-viewer delay time"); *id*. at 25:35–45 ("client side-induced end-to-end digital content latency"); *id*. at 25:59–65 (latency between "RTMP media server(s)" and "RMTP [*sic*] CDN servers"); *id*. at 26:1–3 (latency between "WebRTC media server(s)" and the RTMP CDN); *id*. at 26:3–9 (latency resulting from copying and transcoding live streams within the RTMP CDN); *id*. at 26:11–15 (latency resulting from media servers and RTMP CDN); *id*. 26:16–18 ("client-introduced digital content latency"); *id*. at 45:1–4 ("latency between a given broadcaster's live stream and the viewer client devices" introduced by HLS server architecture); *id.* at 45:6 ("overall average latency for all viewers"); *id*. at 45:10–11 ("latency

introduced by the HLS segmenting process"); *id*. at 45:12–13 ("latency introduced by the transfer of files through the HLS server architecture").

188. Each of these latencies involves a different choice of source or destination and therefore, as explained above, would result in different measurements of latency, which the Asserted Patents implicitly acknowledge by describing widely disparate values for the different measures of latency. *C.f. id.* at 24:65–25:2 (between 2 and 10 seconds), *with id*. at 26:9 (150 ms); *id*. at 26:15 (500 ms); *id*. at 26:17 (1–2 seconds); *id*. at 28:40 (same); *id*. at 40:20 (8–12 seconds). From my review of the intrinsic record, there is no guidance that indicates to a POSA which of these potential measures of latency (if any) should be used to evaluate whether the disputed limitations are met.

189. Second, even assuming that a POSA could determine what measurement of latency the claims require for an individual client, I found no disclosure in the common specification of the Asserted Patents that explains how to measure "client-by-client latency." A POSA seeking to characterize the statistical properties of a set of latency values for a set of clients would have innumerable options at their disposal, such as the median, mean, range, or standard deviation of the set of latencies across clients. For example, a POSA could seek to lower the average latency of all clients, even if certain outlier clients had higher latencies such that there was a wide variance in latency. Alternatively, for example, a POSA could aim to keep all latencies tightly clustered within a narrow range, even if the latencies increased on average. It would not be clear from the Asserted Patents which of these (if either) qualify as a reduction or mitigation of client-by-client latency.

190. Based on my review of the Asserted Patents, even if a POSA chose a metric for measuring client-by-client latency, they would find no objective guidance regarding what

constitutes sufficient mitigation or a significant reduction in client-by-client latency to fall within the scope of the claims.[10] As explained above, the amount of latency that is acceptable depends on the purpose of the system being designed and must be balanced by other tradeoffs that affect latency, such as bandwidth, buffer sizes, compression, and cost, quality, and reliability considerations. POSAs have wide discretion to balance these various considerations that affect latency, and each POSA could arrive at different latencies that each considered to be "mitigated" or "significantly reduced."

191. I further note that mitigating or significantly reducing client-by-client latency is not an intrinsic property of a system, but is rather a comparison between the particular system under consideration and a hypothetical system in which client-by-client latency is somehow not mitigated or significantly reduced. Put simply, a POSA would not be able to determine whether a particular system met these limitations without knowing the client-by-client latency baseline from which any mitigation or reduction should be measured.

192. Thus, in my opinion, a POSA would not be able to understand when a given system has sufficiently mitigated or reduced client-by-client latency to fall within the scope of the claims.

F. Terms Lacking Antecedent Basis

Terms	Genius Sports' Construction	PANDA's Construction
"video Internet communication channel" ('697 Pat. cl. 20, 22)	Indefinite	Not indefinite; plain and ordinary meaning

[10] The sole example in the Asserted Patents of "significantly reduced" latency is limited to an "HLS latency of approximately 8 to 12 seconds, as compared to a conventional HLS latency on the order of 100 seconds." '697 patent at 40:19–22. This is a reference to video streaming latency, however, not latency in synchronizing online gaming information or digital content relating to event information as required by the claims.

"event information Internet communication channel" ('687 Pat. cl. 20, 22)	Indefinite	Not indefinite; plain and ordinary meaning

193. I have also considered the terms "video Internet communication channel" and "event information Internet communication channel" with respect to claims 20 and 22 of the '697 and '687 patents, as those terms would have been understood by a POSA at the time of the alleged invention. In my opinion, the terms lack antecedent basis and are therefore indefinite.

194. Claim 20 of the '697 patent and '687 patent recites a third and a fourth "video Internet communication channel" between the plurality of media sources and viewer client devices. '697 patent, claim 20; '687 patent, claim 20. Each claim 20 also recites a third and a fourth "event information Internet communication channel" between the at least one first event socket and viewer devices. '697 patent, claim 20; '687 patent, claim 20. But each claim 19, from which each respective claim 20 depends, does not recite any "video Internet communication channel" or any "event information Internet communication channel." *See, e.g.*, '697 patent, claims 19, 20. Instead, each claim 19 recites a first and a second "Internet communication channel" between the plurality of media sources and viewer client devices and a third and a fourth "Internet communication channel" between the first event socket and the viewer devices. *See, e.g.*, *id.*, claim 19. Because each claim 19 does not contain a first or a second "video Internet communication channel" or a first or a second "event information Internet communication channel," each claim 20's third and fourth "video Internet communication channel" and third and fourth "event information Internet communication channel" lacks antecedent basis. *See, e.g.*, *id.*, claims 19, 20. Moreover, a POSA would not consider this to be a mere typographical issue where the term "video" or "event information" was accidentally omitted, because each claim 19 already contains a third and a fourth "Internet communication channel" between at least one first event

socket and the viewer client devices. *See, e.g.*, *id.*, claim 19. Thus, it would not be clear to a POSA how to resolve the ambiguity, which I understand renders the claim indefinite for the ’697 and ’687 patents.

195. Claim 22 of the ’697 patent and the ’687 patent, which both depend indirectly from their respective claim 19 via claim 21, likewise recites a third and a fourth “video Internet communication channel” between the plurality of media sources and viewer client devices. *See, e.g.*, *id.*, claims 19, 21, 22. Each claim 22 also recites a third and fourth “event information Internet communication channel” between the at least one first event socket viewer client devices. *See, e.g.*, *id.*, claim 22. These terms are unclear and lack an antecedent basis for the same reasons as stated above, which I understand renders this claim indefinite for the ’697 and ’687 patents.

196. Further, I have reviewed the specifications of the Asserted Patents and found no embodiments that contain both “video Internet communication channel[s]” and separate “Internet communication channel[s]” for delivering video content. Similarly, I observed no embodiments that contain both “event information Internet communication channel[s]” and separate “Internet communication channel[s]” that deliver event information. In fact, the Asserted Patents disclose separate embodiments for such channels. For example, one embodiment includes first and second “video Internet communication channel[s]” to distribute copies of video content but separate first and second “event information Internet communication channel[s]” to distribute event information. *See, e.g.*, *id.* at 9:16–58. Another embodiment includes first and second “Internet communication channel[s]” to distribute copies of the video content but third and fourth “Internet communication channel[s]” to distribute event information. *See, e.g.*, *id.* at 9:59–10:43. Thus, the exemplary embodiments in the Asserted Patents indicate that these terms are meant to be used in

a mutually exclusive fashion, which would lead a POSA to conclude that claims 20 and 22 of the ’687 and ’697 patents have combined incompatible terms.

197. For the reasons explained above, it is my opinion that the terms “video Internet communication channel” and “event information Internet communication channel” are indefinite as used in claims 20 and 22 of the ’687 and ’697 patents.

EXHIBIT A

DR. STEPHEN B. WICKER

Professor Emeritus of Electrical and Computer Engineering,
Cornell University

EDUCATION

Ph.D.	Electrical Engineering University of Southern California	1987
M.S.E.E.	Electrical Engineering Purdue University	1983
B.S.E.E.	Electrical Engineering University of Virginia	1982

EMPLOYMENT HISTORY

Cornell University, Ithaca New York	
School of Electrical Engineering	
Professor Emeritus	2024 - present
Associate Director for Research	2000 - 2003
Professor	1999 - 2024
Associate Professor	1996-1999
Georgia Institute of Technology, Atlanta, Georgia	
School of Electrical and Computer Engineering	
Associate Professor	1992-1996
Assistant Professor	1987-1992
Hughes Aircraft, El Segundo, California, Information Sciences Department, System Laboratories, Space and Communications	
Staff Engineer	1983-1987
Bell Laboratories, Network Architecture Research Group Columbus, Ohio	1982

EXPERIENCE SUMMARY

Professor Wicker teaches and conducts research in wireless information networks, security and privacy. His research has focused on the development and application of advanced technologies to adaptive networks. Current interests include privacy-aware design practices for wireless networks, infrastructure monitoring, and national security. Other interests include the downstream impact of design decisions, and the evolution of the nation's telecommunications networks.

From 2005 – 2018, Professor Wicker was the Cornell Principal Investigator for the TRUST Science and Technology Center – a National Science Foundation center dedicated to the development of technologies for securing the nation's critical infrastructure. In 2010 Professor Wicker briefed the staff of the Congressional Committee on Science and Technology and was appointed to the Air Force Scientific Advisory Board. In 2011 he was made a Fellow of the IEEE for "contributions to wireless information systems." In 2014 he briefed the staff of the National Economic Council at the White House on the subject of privacy-aware designs for cellular and the smart grid.

Technical Duties at Hughes Aircraft included the following:

1. Principal System Engineer for advanced military satellite communications, new business.
2. Team leader and principal author of study examining the use of 60 and 94 GHz monolithic arrays in satellite cross-links.
3. Team leader and principal author of study examining the use of High Electron Mobility Transistor (HEMT) devices in frequency synthesizers for frequency hopped communication systems.
4. Responsible for analysis, design, and production of 800 Mbps demod-remod SQPSK receiver.
5. Responsible for analysis and design of several receivers and digital signal processors for various military satellite programs.
6. Conducted analysis and simulation of MILSTAR direct digital frequency synthesizers.

Technical Duties at Bell Laboratories included the development of synchronous protocols for a packet switch (no. 2 STP).

CONSULTING

Expert Witness (testifying, past five years):

- SEVEN Networks v. Motorola Mobility (for the defendant)
- Ax Wireless v Lenovo and Dell (for the defendants)
- Identity Security v. Apple (for the defendant)
- Netgear v. TP-Link (for the claimant, ITC)
- Acceleration Bay v Activision (for the defendant)
- State Farm v. Amazon (for the plaintiff)
- GComm v. Samsung (for the defendant)
- Unisys v. Atos et al. (for the plaintiff)
- Alacritech v. Intel et al. (for the defendants)
- University of Minnesota v. Ericsson and Nokia (for the defendants)
- Viasat v. Adobe (for the defendant)
- KPN v Ericsson (for the defendant)
- TQ Delta v DISH (for the defendant)
- AMO Development v. Alcon Vision, LLC (for the defendant)
- Sonrai v. Samsung et al (for the defendants)
- IPCom v AT&T et al (for the defendants)
- Teradyne v. Astronics (for the defendant)
- Huawei v. Verizon (for the defendant)
- Google v. Sonos (for the defendant)
- Barkan v. Sprint et al. (for the defendants)
- Gigamon v. Apcon (for the defendant)
- Impact Engine v. Google (for the plaintiff)
- Sprint v. Altice et al. (for the plaintiff)
- KAIFI v. AT&T (for the defendant)

- Sprint v. Charter et al. (for the plaintiff)
- Live Person v. 24/7 (for the plaintiff)
- Motorola v. Hytera (for the plaintiff)

Technical:

- Mesh Networks, Maitland FL 1999 – 2000
  - Wireless Networking, Medium Access Control
- Mitre Corporation., Eatontown, NJ. 1997 - 2005
  - Turbo Error Control for Wireless Applications.
- Motorola Inc. Advanced Mobile Messaging Division 1997 – 1998
  - Wireless Networking
- Digital Technics Inc., Baltimore, MD. 1995 - 1997
  - Design of SS7/SONET/ATM interface for telephone switch.
- Integrated Device Technology, Santa Clara, CA. 1995 - 1996
  - Development of Reed-Solomon error control chip for high-speed mass memory applications.
- Lockheed Sanders, Avionics Division, Nashua, N.H. 1994 - 1995
  - Development of error control chips for magnetic recording in space applications.
- Mobile Telecommunication Technologies, Jackson, MS. 1993 - 1998
  - Design and analysis of mobile networks for paging and data transfer, bulk data transfer using frame relay.
- Al-Elm Research and Development Corp., Raleigh, N.C. 1992 - 1994
  - Design and development of advanced digital voice and FAX encryption techniques.
- Intellivision, Atlanta, GA. 1992 - 1993
  - Design and development of automated telephone switching equipment.
- Unisys Corporation, San Jose, CA. 1991 - 1992
  - Design and development of error control algorithms for internodal communication in multiprocessing computer systems.
- II Morrow Inc., UPS Technical Systems, Salem, OR. 1990 - 1992
  - Analysis, design, and development of error control systems for mobile radio networks.
- Charter Leasing Corporation, Richmond, VA. 1990 - 1993
  - Analysis and design of digital switching systems for commercial telephony.

CURRICULUM DEVELOPMENT

- Developed and implemented a course for Graduate Students entitled "Modern Cellular Communications: LTE to 5G" for the College of Engineering, Cornell University, Ithaca, New York (Fall 2019).

- Developed and implemented a course for Freshmen entitled "Wiretaps to Facebook: Security and Privacy in Information Networks" for the College of Engineering, Cornell University, Ithaca, New York (Fall 2010).

- Developed and implemented a course for Juniors entitled “Networks and Systems” for the School of Electrical Engineering, Cornell University, Ithaca, New York (Spring 2005).

- Developed and implemented a course for Seniors entitled “Artificial Intelligence and Expert Systems for Telecommunications Networks” for the School of Electrical Engineering, Cornell University, Ithaca, New York (Spring 1998).

- Developed and implemented a course for Freshmen entitled “Introduction to Telecommunications” for the College of Engineering, Cornell University, Ithaca, New York (Spring 1997).

- Developed and implemented a graduate course in Cryptography and Data Security for the School of Electrical Engineering, Cornell University, Ithaca, New York (Fall 1996).

- Academic Coordinator, Georgia Tech - Lorraine, Metz, France, September 1990 - March 1992.

- Developed and implemented two graduate courses in Error Control Coding and one graduate course in Cryptography and Data Security for the School of Electrical Engineering, Georgia Institute of Technology, Atlanta, Georgia.

- Developed and taught numerous short courses on digital communication systems, wireless information networks, error control, and cryptology.

PH. D. STUDENTS (GRADUATED)

Cornell University

- **Stephanie Santoso** (“Navigating the IP Issues of 3D Printing,” graduated Fall 2019)
- **Kolbeinn Karlsson** (“Design And Analysis Of Privacy Mechanisms For The Internet Of Things,” graduated Summer 2018)
- **Shion Goha** (“Aspects of Privacy in Social Networks,” graduated Summer 2016)
- **Dipayan Ghosh** (“Privacy-Aware Demand Response Systems,” graduated Summer 2014)
- **Daniel Lee** (“Reliable and Energy-Efficient Wireless Sensor Networks for Mobile Healthcare Systems,” graduated Summer 2011)
- **Nathan Karst** (“Combinatorial Designs For Key Distribution And Secure Re-Keying In Group Communication Systems,” graduated Summer 2011)
- **Sergio Bermudez** (“Analysis of Topological Properties of Random Wireless Sensor Networks,” graduated Summer 2010)
- **Mikhail Lisovich** (“Mobility And Privacy: Exploring Technical And Social

Issues In Emerging Pervasive Sensor Networks," graduated Spring 2010)

- **Michael Eoin Buckley** ("Side Information Inference For Turbo Code Based Systems," graduated Fall 2009)
- **Coalton Bennett** ("Secure Data Reporting for Demand Response Systems," graduated Fall 2009)
- **Ania Kacewicz** ("Coding Theory for Security and Reliability in Wireless Networks," graduated Fall 2009)
- **Phillip Kuryloski** ("Design Strategies For Human Centered Sensor Networks," graduated Spring 2009)
- **Sameer Pai**, ("Co-Design Of Sensor Networking Technology And Privacy Policy," graduated Spring 2008)
- **Hui Qu**, ("Co-Designed Localization And Geographic Routing Algorithm For Sensor Networks," graduated Spring 2008)
- **Christina Tavoularis**, ("Event Detection and Queueing in Wireless Sensor Networks," Graduated Fall 2006)
- **Hazer Inaltekin**, ("Game Theoretic Mac Protocol Design And Interference Analysis For Wireless Networks," Graduated Spring 2006)
- **Xin Zhang**, ("Distributed Source Coding in Sensor Networks," graduated Spring 2006)
- **Martin Roth**, ("TERMITE: A Swarm Intelligent Routing Algorithm for Mobile Wireless Ad Hoc Networks," graduated Winter 2005)
- **Prince Samar**. ("Optimizing Protocols for Mobility in Ad Hoc Networks," graduated Summer, 2004)
- **Yasser Mourtada**. ("Content-Aware Routing Schemes," graduated Summer, 2004)
- **Allen MacKenzie**. ("Game Theoretic Analysis of Medium Access Control Protocols," graduated Spring, 2003)
- **Ewald Hueffmeier, Jr**. (Applied Mathematics - Turbo Decoding Architectures and Algorithms for Wireless Data Systems, graduated Summer, 2002)
- **Xie Xi** (AI and Expert Systems for Random Access Protocols, graduated Summer, 2002)
- **Bhaskar Krishnamarchari** ("Complexity and Phase Transitions in Wireless Networks," graduated Spring, 2002)
- **Sarah Spence** ("Subfield Subcodes of Reed-Solomon Codes," graduated Spring, 2002)
- **Eric Sakk** ("Wavelets Based on Reed-Muller Coding," graduated Spring, 2002)
- **Frederic Fontaine** ("Iterative Trellis Decoding for Block Codes," graduated Summer, 1999)
- **Saejoon Kim** ("Belief Propagation, Parameter Estimation, and Issues in Turbo Decoding," graduated Summer 1998)

Georgia Tech

- **Andreas Yankopolus**. ("Adaptive Error Control for Wireless Multimedia"), graduated Winter, 2004)
- **James Kosmach** ("Soft Decision Decoding for Wireless Mobile Systems," graduated Fall. 1998)

- **Amjad Luna** ("DSP Implementation of Advanced Decoder Architectures," graduated Winter, 1998
- **Jong-Il Park** ("Turbo Equalization Algorithms," graduated Winter, 1998)
- **Thomas Tapp** ("Advanced Error Control Systems for Mobile Messaging Systems," graduated Summer, 1996)
- **Mahdi Zaidan** ("Tree Structure Trellis Codes," graduated Spring, 1996)
- **Xiao-An Wang** ("Trellis-Based Decoders and Neural Network Implementations," graduated Winter, 1996)
- **Ahmed El-Rifai** ("Application of Linear Block Codes to the McEliece Cryptosystem," graduated Fall, 1995)
- **Miin-Jong Hao** ("Performance Evaluation of Practical FSK, CPFSK, and ASK Detection Schemes for Coherent Optical Fiber Communication Systems," graduated Summer, 1995)
- **Slim Souissi** ("Adaptive Packet Combining in CDMA Systems," graduated Summer, 1994)
- **Deidre Williams** ("Key Management in the McEliece Cryptosystem," graduated Summer, 1994)
- **Lars Rasmussen** ("Trellis Coded Adaptive Rate Hybrid-ARQ Protocols over AWGN and Slowly Fading Rician Channels," graduated Summer 1993)
- **Mohssen Alabbadi** ("Integration of Error Correction, Encryption, and Signature Using Linear Error-Correcting Block Codes," graduated Summer 1993)
- **Michael Bartz** ("Soft Decision Decoders Based on Artificial Neural Networks," graduated Summer 1992)
- **Michael Rice** ("Adaptive Error Control Over Slowly Varying Channels," graduated Spring 1991)
- **Bruce Harvey** ("Adaptive Rate Convolutional Coding Using the Viterbi Decoder," graduated Spring 1991)

PUBLICATIONS

Theses

- Wicker, S. B., "The Geometry of Error Correcting Codes," Ph.D. Thesis, University of Southern California, Los Angeles, California, May 1987.

- Wicker, S. B., "A Microprocessor Based Diagnostic System," BS Thesis, University of Virginia, Charlottesville, Virginia, May 1982.

Books

- Wicker, S. B., *Cellular Convergence and the Death of Privacy*, Oxford University Press, 2013.

- Wicker, S. B. and Kim, S., *Fundamentals of Codes, Graphs, and Iterative Decoding*, Boston: Kluwer Academic Press, 2002.

- Heegard, C. and Wicker, S. B., *Turbo Coding*, Boston: Kluwer Academic Press, 1999.

- Wicker, S. B., *Error Control Systems for Digital Communication and Storage*, Englewood Cliffs: Prentice Hall, 1995.

- Wicker, S. B. and Bhargava, V. K. (editors), *Reed-Solomon Codes and Their Applications*, Piscataway: IEEE Press, 1994.

- Chmora, A., and Wicker, S. B. (editors), *Error Control, Cryptology, and Speech Compression: Workshop on Information Protection, Moscow, Russia*, Lecture Notes in Computer Science, Volume 829, Heidelberg: Springer Verlag, 1994.

Parts of Books

- S. B. Wicker, “Privacy-Aware Design for the Monitoring, Control, and Protection of Critical Infrastructure,” in *Homeland Security Threats, Countermeasures, and Privacy Issues* (ed. Giorgio Franceschetti), Artech House, 2010

- Z. Haas, J. Y. Halpern, L. Li, and S. B. Wicker, “A decision-theoretic approach to resource allocation in wireless multimedia networks,” *Resource Allocation in Next Generation Wireless Networks* (W. Li and Y. Pan, eds.), Nova Science Publishers, 2005.

- P. Samar and S.B. Wicker, "On the Behavior of Communication Links in a Multi-Hop Mobile Environment," Frontiers in Distributed Sensor Networks, S.S. Iyengar and R.R. Brooks (eds.), CRC Press, 2005.

- B. Krishnamachari and S. B. Wicker, "Base Station Location Optimization in Cellular Wireless Networks using Heuristic Search Algorithms," book chapter in Soft Computing in Communications, Ed. L. Wang, Springer-Verlag, 2004.

- Wicker, S. B., "Cyclic Codes" in *Wiley Encyclopedia of Telecommunications*, (ed: J. Proakis), 2002.

- Bhaskar Krishnamachari, Stephen B. Wicker, Ramon Bejar, and Marc Pearlman, "Critical Density Thresholds in Distributed Wireless Networks," Advances in Coding and Information Theory, eds. H. Bhargava, H.V. Poor and V. Tarokh, Kluwer Publishers, 2002.

- Carla Games, Xi Xie, Stephen B. Wicker, and Bart Selman, “Heavy Tails, Phae Transitions, and the Nature of Cutoff,” in *Codes, Graphs, and Systems*, Boston: Kluwer, 2002.

- Bhaskar Krishnamachari, Xi Xie, Bart Selman, and Stephen B. Wicker, "Analysis of Random Walk and Random Noise Algorithms for Satisfiability

Testing," Principles and Practice of Constraint Programming - CP 2000, *Lecture Notes in Computer Science*, vol. 1894, Springer, September 2000.

- Bhaskar Krishnamachari and Stephen B. Wicker, "Global Search Techniques for Problems in Mobile Communications," in *Telecommunications Optimization: Adaptive and Heuristic Approaches*, Eds. David Corne et al., John Wiley & Sons Publishers, October 2000.

- Costello, D., Hagenauer, J., Imai, H., and Wicker, S. B., “Applications of Error Control Coding,” *Information Theory: 50 Years of Discovery* (S. Verdú and S. McLaughlin, ed), IEEE Press, 1999.

- Wicker, S. B., “Deep Space Applications,” *Handbook of Coding Theory*, (Vera Pless and William Cary Huffman, ed.), Amsterdam: Elsevier, 1998.

- Wicker, S. B. and Bhargava, V. K., “Introduction,” in *Reed-Solomon Codes and Their Applications*, (S. B. Wicker and V. K. Bhargava, ed.), IEEE Press, 1994.

- Wicker, S. B. and Bartz, M., “Reed-Solomon Codes in Hybrid Automatic-Repeat-Request Protocols,” in *Reed-Solomon Codes and Their Applications*, (S. B. Wicker and V. K. Bhargava, ed.), IEEE Press, 1994.

- Alabbadi, M. and Wicker, S. B., “Susceptibility of Digital Signature Schemes Based on Error-Correcting Codes to Universal Forgery,” in *Error Control, Cryptology, and Speech Compression: Workshop on Information Protection, Moscow, Russia* (A. Chmora and S. B. Wicker, ed.), Lecture Notes on Computer Science, Volume 829, Heidelberg: Springer Verlag, 1994.

- Souissi, Slim and Wicker, S. B., "Application of Packet Combining Techniques to a DS/CDMA System Using Convolutional Encoding and Sequential Decoding", in *Communication Theory and Applications II* (B. Honary, M. Darnell, and P. Farrell, ed.) London: HW Communications Publishing Ltd, 1993.

- Wicker, S. B., “Trellis Coded Hybrid-ARQ Protocols,” in *Communication, Control, and Signal Processing*, pp. 339 - 346, (Erdal Erikan, ed.), Amsterdam: Elsevier Publishing (1990).

Refereed Journal Articles

- S. B. Wicker, "The Ethics of Zero-Day Exploits – The NSA Meets the Trolley Car,” *Communications of the ACM*, January 2021.

- S. B. Wicker, "eBook Surveillance and the Threat to Freedom of Association," *Journal of Information Security and Applications*, Volume 55, December 2020.

- S. B. Wicker and D. Ghosh, "Reading in the Panopticon – Your Kindle May Be Spying on You, But You Can't Be Sure," *Communications of the ACM*, Volume 63, No. 5, May 2020.

- S. B. Wicker, "Smartphones, Contents of the Mind, and the 5th Amendment," *Communications of the ACM*, April 2018.

- S. B. Wicker, "Forced Decryption and the Fifth Amendment: A Technical Perspective," *The Proceedings of the IEEE*, January 2018.

- S. B. Wicker and K. Karlsson, "Ad Blockers: Technology, Ethics, and a Serious Difference of Opinion," *Communications of the ACM*, October, 2017.

- A. S. Kubesch and S. B. Wicker, "Digital rights management: The cost to consumers," in *Proceedings of the IEEE*, vol.103, no.5, pp.726-733, May 2015

- S. M. Santoso and S. B. Wicker, "The future of three-dimensional printing: Intellectual property or intellectual confinement?" *New Media & Society*, June 12, 2014

- Wicker, S. B. and Santoso, S., "Access to the Internet is a Human Right," *Communications of the ACM*, June 2013.

- N. Karst, S. B. Wicker. "On the rekeying load in group key distributions using cover-free families," *IEEE Transactions on Information Theory,* Vol. 58, No. 10, October 2012, pp. 6667 – 6671.

- S. B. Wicker, "The Loss of Location Privacy in the Cellular Age," *Communications of the ACM,* Vol. 55, No. 8, August 2012, pp. 60 - 68.

- S. B. Wicker, "Digital Telephony and the Question of Privacy," *Communications of the ACM,* Vol. 54, No. 7, July, 2011, pp. 88 – 98.

- S. B. Wicker and D. E. Schrader, "Privacy-Aware Design Principles for Information Networks," *Proceedings of the IEEE*, February 2011, pp. 330 - 350.

- Mikhail Lisovich, Deirdre Mulligan, and Stephen B. Wicker, "Inferring Personal Information from Demand-Response Systems," *IEEE Security and Privacy Magazine*; January/February 2010.

- Anna Kacewicz and Stephen B. Wicker, "Redundancy Minimizing Techniques for Robust Transmission in Wireless Networks," *Journal of Communications and Networks*, 11:564-573, 2009.

- H. Inaltekin, M. Chiang, H. V. Poor and S.B. Wicker, “The behavior of unbounded path-loss models and the effect of singularity on computed network characteristics,” *IEEE J. Selected Areas Communications*, September 2009

- H. Inaltekin and S.B. Wicker, "A One-shot Random Access Game for Wireless Networks – Behavior of Nodes at Nash Equilibria" *IEEE/ACM Trans. on Networking*, December 2008.

- S. Pai, M. Meingast, T. Roosta, S. Bermudez, S. Wicker, D. Mulligan, and S. S. Sastry, "Confidentiality in Sensor Networks: Transactional Information," *IEEE Security and Privacy Magazine*; July/August 2008.

- P. Venkitasubramaniam, He Ting, Lang Tong, Stephen B. Wicker, “Toward an analytical approach to anonymous wireless networking,” *IEEE Communications Magazine,* vol.46, no.2, pp.140-146, February 2008

- H. Qu and S. B. Wicker, "A Combined Localization and Geographic Routing Algorithm for Rapidly-Deployed Wireless Sensor Networks", *International Journal of Distributed Sensor Networks*, Volume 4, Issue 1 January 2008, pages 44 - 63.

- H. Qu and S. B. Wicker, "Co-Designed Anchor-Free Localization and Location-Based Routing Algorithm for Rapidly-Deployed Wireless Sensor Networks", *Information Fusion*, 2008.

- M. Meingast, S. Pai, S. Wicker, S. S. Sastry, "Privacy in Camera Networks, A Technical Perspective," EECS Department, University of California, Berkeley, *Technical Report* UCB/EECS-2007-94, July 2007.

- X. Zhang, J. Chen, S. B. Wicker, and T. Berger, "Successive Coding in Multiuser Information Theory", *IEEE Transactions on Information Theory*, Volume 53, No. 6, June 2007, pp. 2246 – 2254.

- P. Samar and S. B. Wicker, “Link Dynamics and Protocol Design in a Multi-Hop Mobile Environment,” *IEEE Transactions on Mobile Computing*, September 2006.

- X. Zhang, S. B. Wicker, "On the Optimal Distribution of Sensors in a Random Field", *ACM Transactions on Sensor Networks*, March 2006.

- J. Chen, X. Zhang, T. Berger and S. B. Wicker "The Sum-Rate Distortion Function and Optimal Rate Allocation for the Quadratic Gaussian CEO

Problem" *IEEE Journal on Selected Areas in Communications*: Special Issue on Sensor Networks, Volume 22, No. 6, August 2004.

- Bhaskar Krishnamachari, Rung-Hung Gau, Stephen B. Wicker, and Zygmunt J. Haas, "Optimal Sequential Paging in Cellular Networks," ACM/Baltzer Wireless Networks, Vol 10, No. 2, March 2004.

- Bhaskar Krishnamachari, Stephen Wicker, Ramon Bejar and Cesar Fernandez, "On the Complexity of Distributed Self-Configuration in Wireless Networks," in Kluwer Journal on Telecommunication Systems, Special Issue on Wireless Networks and Mobile Computing, Eds. I. Stojmenovic and S. Olariu, Vol. 22, No. 1, January/April 2003.

- B. Krishnamachari, Y. Mourtada, and S. Wicker, "The Energy-Robustness Tradeoff for Real-Time Information Routing in Wireless Sensor Networks," submitted to the *Special Issue of Elsevier Computer Networks on Wireless Sensor Networks*, October 2002.

- Andrea Goldsmith And Stephen B. Wicker, "Design Challenges For Energy-Constrained Ad Hoc Wireless Networks," IEEE Wireless Communications Magazine, August, 2002.

- Allen B. MacKenzie and Stephen B. Wicker, "Game Theory and the Design of Self-Configuring, Adaptive Wireless Networks," *IEEE Communications Magazine*, November 2001.

- Buckley, M. E. and Wicker, S. B., “The Design and Performance of a Neural Network for Predicting Decoder Error in Turbo-Coded ARQ Protocols,” *IEEE Transactions on Communications*, Volume 48, Number 4, pp. 566 - 576, April 2000.

- Park, J. I., Wicker, S. B., and Owen, H. L., “Trellis-Based Soft Output Adaptive Equalization Techniques for TDMA Cellular Systems,” *IEEE Transactions on Vehicular Technology*, pp. 83 – 94, January 2000.

- Wang, X.A., and Wicker, S. B., "The BCJR Trellis and the Design and Implementation of Trellis Decoders for Some BCH Codes," *Applicable Algebra in Engineering, Communication, and Computing*, Volume 9, Number 6, 1999, pp. 521 - 546.

- Buckley, M. E. and Wicker, S. B., “A Neural Network for Predicting Decoder Error in Turbo Decoders,” *IEEE Communications Letters*, Volume 3, Number 5, May 1999, pp. 145 - 147.

- Tapp, T., Luna, A., Wang, X.A., and Wicker, S. B., “BCH Soft Decision Decoders for Mobile Data Applications,” *IEEE Transactions on Communications*, Volume 47, Number 3, pp. 333 – 337, March 1999.

- Luna, A., Fontaine, F. and Wicker, S. B., “Iterative Maximum Likelihood Trellis Decoding for Block Codes,” *IEEE Transactions on Communications*, Volume 47, Number 3, pp. 338 – 342, March 1999.

- Costello, D., Hagenauer, J., Imai, H., and Wicker, S. B., “Applications of Error Control Coding,” *IEEE Transactions on Information Theory*, 50th Anniversary Issue, Volume 44, Number 6, pp. 2531 - 2560, October 1998.

- Zaidan, M. Y. and Wicker, S. B., “Trellis Coded Modulation with σ-Tree Codes,” *IEEE Transactions on Information Theory*, Volume 43, Number 6, pp. 2005 - 2012, November, 1997.

- Hao, M.-J. and Wicker, S. B., “The Effect of Error Control Coding in Multichannel FSK Coherent Lightwave Communication Systems,” *IEEE Journal of Lightwave Technology*, Volume 14, Number 12, pp. 2648 - 2656, December, 1996.

- Rasmussen, L. K., Bartz, M. J., and Wicker, S. B., “A Comparison of Trellis Coded and Reed-Solomon Coded Hybrid-ARQ Protocols over Slowly Fading Rayleigh Channels,” *Wireless Personal Communications*, Volume 2, Number 4, pp. 393-413, 1996.

- Wang, X-A, and Wicker, S. B., “Generalized Soft Decision Decoding for Concatenated Systems,” *IEEE Transactions on Information Theory*, Volume 42, Number 2, pp. 543-553, March, 1996.

- Wang, X-A, and Wicker, S. B., “The Analog Neural Net Viterbi Decoder,” *IEEE Transactions on Communications*, Volume 44, Number 2, February, 1996, pp. 165 - 171.

- Rasmussen, L. and Wicker, S. B., “Trellis Coded, Type-I Hybrid-ARQ Protocols Based on CRC Error-Detecting Codes,” *IEEE Transactions on Communications*, Volume 43, Number 10, October, 1995, pp. 2569 - 2575.

- Hao, M.-J. and Wicker, S. B., “Performance Evaluation of FSK and CPFSK Optical Communication Systems: A Stable and Accurate Method,” *IEEE Journal of Lightwave Technology*, Volume 13, Number 8, August 1995, pp 1613 - 1623.

- Rasmussen, L. and Wicker, S. B., “A Comparison of Two Code Combining Techniques for Equal Gain, Trellis Coded Diversity Receivers,” *IEEE Transactions on Vehicular Technology*, Volume 44, Number 2, May, 1995, pp. 291 - 295.

- Souissi, S. and Wicker, S. B., “A Diversity Combining DS/CDMA System with Convolutional Encoding and Viterbi Decoding,” *IEEE Transactions on Vehicular Technology*, Volume 44, Number 2, May, 1995, pp. 304 - 312.

- Wicker, S. B. and Bartz, M., “Type-II Hybrid-ARQ Protocols Using Punctured MDS Codes,” *IEEE Transactions on Communications*, Vol. 42, No. 4, pp. 1431-1440, April 1994.

- Rice, M. D. and Wicker S. B., “A Sequential Testing Scheme for Adaptive Error Control on Slowly Varying Channels” *IEEE Transactions on Communications*, Vol. 42, No. 4, pp. 1533-1543, April 1994.

- Harvey, B. A. and Wicker, S. B., “Packet Combining Systems Based on the Viterbi Decoder” *IEEE Transactions on Communications,* Vol. 42, No. 4, pp. 1544-1557, April 1994.

- Rice, M. D. and Wicker, S. B., “Adaptive Error Control for Slowly Varying Channels,” *IEEE Transactions on Communications*, Vol. 42, No. 3, pp. 917-926, March 1994.

- Wicker, S. B. and Bartz, M., “The Design and Implementation of Type-I and Type-II Hybrid-ARQ Protocols Based on First-Order Reed-Muller Codes,” *IEEE Transactions on Communications*, Vol. 42, No. 3, pp. 979-987, March 1994.

- Rasmussen, L. and Wicker, S. B., “Trellis Coded Hybrid-ARQ Protocols over AWGN and Slowly Fading Rician Channels,” *IEEE Transactions on Information Theory*, Volume 40, Number 2, March 1994, pp. 418-428.

- Rasmussen, L. and Wicker, S. B., “A Comparison of Two Retransmission Request Mechanisms for Trellis Coded Modulation,” *Electronics Letters*, Volume 29, Number 25, pp. 2162 - 2163, December 9, 1993.

- Rice, M. D. and Wicker, S. B., "Modified Majority-Logic Decoding of Cyclic Codes in Hybrid-ARQ Systems, *IEEE Transactions on Communications*, Volume 40, Number 9, pp. 1413 - 1417, September, 1992.

- Alabbadi, M. and Wicker, S. B., “Cryptanalysis of the Harn-Wang modification of the Xinmei signature scheme,” *Electronics Letters*, Volume 28, Number 18, pp. 1756 - 1757, August 27, 1992.

- Wicker, S. B., “Reed-Solomon Error Control Coding for Data Transmission over Rayleigh Fading Channels with Feedback,” *IEEE Transactions on Vehicular Technology*, Volume 41, Number 2, pp. 124 - 133, May 1992.

- Alabbadi, M. and Wicker, S. B., “The Security of Xinmei’s Digital Signature Scheme” *Electronics Letters*, Volume 28, Number 9, pp. 890 - 891, April 1992.

- Wicker, S. B., “Adaptive Rate Error Control Through the Use of Diversity Combining and Majority-Logic Decoding in a Hybrid-ARQ Protocol,” *IEEE*

Transactions on Communications, Volume 39, Number 3, pp. 380 - 386, March 1991.

- Harvey, B and Wicker, S. B., "Error-Trapping Viterbi Decoding for Type-I Hybrid-ARQ Protocols," *Canadian Journal of Electrical and Computer Engineering*, Volume 16, Number 1, pp. 5 - 12, January 1991.

- Wicker, S. B., "Muting Algorithms Based on the Use of Side Information Generated by Error Control Systems," *IEEE Transactions on Vehicular Technology*, Volume 39, No 2, pp. 171 - 176, May 1990.

- Wicker, S. B., "Modified Majority-Logic Decoders for Use in Convolutionally Encoded Hybrid-ARQ Systems," *IEEE Transactions on Communications*, Volume 38, No. 3, pp. 263 - 266, March 1990.

- Wicker, S. B., "High Reliability Data Transfer over the Land Mobile Radio Channel," *IEEE Transactions on Vehicular Technology*, Volume 39, No 1, pp. 48 - 55, February 1990.

Refereed Conference Papers

- S. B. Wicker, "eBook Readers, Location Surveillance, and the Threat to Freedom of Association," International Conference on Availability, Reliability, and Security, August 26 – 29, 2019, Canterbury, UK.

- K. Karlsson, K., Adams, D., Rubambiza, G., Xian, Z., van Renesse, R., Weatherspoon, H., Wicker, S., "Untethered: Deployable Blockchains for IoT Environments," ACM Symposium on Cloud Computing 2018 (SoCC '18), October 2018.

- Karlsson, K., Wicker, S., Weatherspoon, H., van Renesse, R., "Vegvisir: An energy-efficient, partition-tolerant blockchain." Proceedings of the International Conference on Distributed Computing Systems (ICDCS), 2018

- Kolbeinn Karlsson; Zhiming Shen; Weijia Song; Hakim Weatherspoon; Robbert van Renesse; Stephen Wicker, "Toward an Emergency Edge Supercloud," ACM Symposium on Cloud Computing 2017 (SoCC '17), Santa Clara, California, September 25-27, 2017

- Shion Guha and Stephen B Wicker. "Connecting Grounded Theory and Machine Learning: Setting a Research Agenda for Human Centered Data Science," Human Centered Data Science Workshop, ACM Conference on Computer Supported Cooperative Work and Social Computing, San Francisco, CA, February 27 – March 2, 2016.

- Kolbeinn Karlsson and Stephen B. Wicker, “The Effect of Location Granularity on Semantic Location Inferences,” in *Proc. of the 49th Hawaiian Conference on System Science* (HICSS-46), Kauai, Hawaii, Jan. 2016.

- Shion Guha and Stephen B. Wicker. 2015. Spatial subterfuge: an experience sampling study to predict deceptive location disclosures. In *Proceedings of the 2015 ACM International Joint Conference on Pervasive and Ubiquitous Computing* (UbiComp '15). ACM, New York, NY, USA, 1131-1135.

- Shion Guha and Stephen B. Wicker, “Do Birds of a Feather Watch Each Other? Homophily and Social Surveillance in Location Based Social Networks,” *Proceedings of the 18th ACM conference on Computer-Supported Cooperative Work and Social Computing*, Vancouver, BC, Canada, March 14-18, 2015.

- Dipayan Ghosh, Jubo Yan, William Schulze, Dawn Schrader, and Stephen Wicker, "The Valuation of Smart Metering Privacy," HUPS, ACM SOUPS 2013, Newcastle, UK.

- Dipayan Ghosh, Stephanie Santoso, Stephen Wicker, Dawn Schrader, Jubo Yan, and William Schulze, "Risky Business: A Study on User Awareness and Valuation of Cellular Privacy Risks," U-PRISM, ACM MobileHCI 2013, Munich, Germany.

- Xiao-an Wang and Stephen B. Wicker, “Channel Estimation and Feedback in OFDM Systems,” to appear in the *Proceedings of the 2013 IEEE Vehicular Technology Conference* (VTC-2013), 2-5 June 2013, Dresden, Germany.

- Dipayan P. Ghosh, Robert J. Thomas, and Stephen B. Wicker. “A Privacy-Aware Design for the Vehicle-to-Grid Framework,” in *Proc. of the 46th Hawaiian Conference on System Science* (HICSS-46), Maui, Hawaii, Jan. 2013.

- Dipayan P. Ghosh, Dawn E. Schrader, William D. Schulze, and Stephen B. Wicker, "Economic Analysis of Privacy-Aware Advanced Metering Infrastructure Adoption," *Proceedings of the IEEE Innovative Smart Grid Technologies Conference* (ISGT) 2012.

- Dipayan P. Ghosh, Stephen B. Wicker and Larry E. Blume, "Game Theoretic Analysis of Privacy-Aware Advanced Metering Infrastructure," Proceedings of IEEE Innovative Smart Grid Technologies Conference (ISGT) Europe 2011.

- Stephen B. Wicker and Robert J. Thomas, “A Privacy-Aware Architecture For Demand Response Systems” in Proc. of the 44 Hawaiian Conference on

System Science (HICSS-44), Kauai, Hawaii, January 10, 2011. Nominee for best paper award.

- Anna Kacewicz and Stephen B. Wicker, "Application of Reed-Muller Codes for Localization of Malicious Nodes, " in *Proc. IEEE International Conference on Communications* (ICC'10), Cape Town, South Africa, May 23–27, 2010.

- Sergio Bermudez and Stephen B. Wicker, "Partial connectivity of multi-hop two-dimensional finite hybrid wireless networks," in *Proc. IEEE International Conference on Communications* (ICC'10), Cape Town, South Africa, May 23–27, 2010.

- Bennett C., Wicker S. B., "Decreased Time Delay and Security Enhancement Recommendations for AMI Smart Meter Networks." *2010 PES Innovative Smart Grid Technologies Conference*., Gaithersburg, Maryland, January 19th-21st, 2010

- Anna Kacewicz and Stephen B. Wicker, "Secrecy and Reliability using Raptor Codes in the Presence of a Wiretapper in a Multiple Path Wireless Network", Proceedings of International Conference on Wireless Communications and Signal Processing, Nanjing, China, Nov 13, 2009 - Nov 15, 2009.

- Bennett C., Wicker S. B., Cardell J., "A Review of the Communication Protocols for Smart Grid AMI Systems." *Fifth Annual Carnegie Mellon Conference on the Electricity Industry: Smart Grids 2009.,* Pittsburgh, Pennsylvania, 2009

- S. Bermudez and S. B. Wicker, "Connectivity analysis under shadowing in wireless networks with data correlation topology control," in Proc. IEEE International Symposium on Wireless Pervasive Computing (ISWPC'09), Melbourne, Australia, Feb. 11–13, 2009.

- S. Bermudez and S. B. Wicker, "Connectivity of finite wireless networks with random communication range nodes," in Proc. IEEE International Conference on Communications (ICC'09), Dresden, Germany, Jun. 14–18, 2009.

- Anna Kacewicz, Stephen B. Wicker, "Optimizing redundancy using MDS codes and dynamic symbol allocation in mobile ad hoc networks," *Proceedings of the Conference on Information Science and Systems* (CISS), 1093-1098, 2008.

- S. A. Bermudez and S. B. Wicker, "On the connectivity of finite wireless networks with multiple base stations," in Proc. 17th International Conference on Computer Communications and Networks (ICCCN'08), Saint Thomas, U.S. Virgin Islands, Aug. 3–7, 2008.

- H. Inaltekin, M. Chiang, H. V. Poor and S. B. Wicker, “On the asymptotic behavior of selfish transmitters sharing a common wireless communication channel,” *Proceedings of the 2008 IEEE International Symposium on Information Theory*, Toronto, Canada, July 2008.

- S. Bermudez and S. B. Wicker, "Taking Advantage of Data Correlation to Control the Topology of Wireless Sensor Networks," 15th International Conference on Telecommunications 16-19 June, 2008, St. Petersburg, Russia

- M. Lisovich, S. Bermudez, and S. B. Wicker, "Reconfiguration in Heterogeneous Mobile Wireless Sensor Networks" *Proceedings of the International Symposium on Wireless Pervasive Computing 2008*, 7-9 May, 2008, Santorini, Greece.

- M. Lisovich and S. B. Wicker, “Privacy Concerns in Upcoming Residential and Commercial Demand-Response Systems,” Clemson Power Systems Conference 2008, March 2008

- C. Bennett, J. Cardell, S. Wicker. "Residential Demand Response Wireless Sensor Network". *Proceedings of the Fourth Annual Carnegie Mellon Conference on the Electricity Industry*, Carnegie Mellon University Department of Electrical Engineering, 5, March, 2008.

- S. Jiang, Y. Cao, S. Iyengar, P. Kuryloski, R. Jafari, Y. Xue, R. Bajcsy, S. Wicker. "CareNet: An Integrated Wireless Sensor Networking Environment for Remote Healthcare," *Proceedings of the 3rd International Conference on Body Area Networks* (BODYNETS 2008), March 13-15, 2008.

- T. Roosta, S. Pai, P. Chen, S. S. Sastry, S. Wicker, "The Inherent Security of Routing Protocols in Ad-Hoc and Sensor Networks," *Proceedings of the 50th Annual IEEE Global Communications Conference* (IEEE GLOBECOM'07), 26-30 November 2007, Washington, DC.

- H. Inaltekin, C. Tavoularis and S. B. Wicker, "Event Detection Time Calculations for Mobile Sensor Networks Using First Passage Processes", *Proceedings of the 50th Annual IEEE Global Communications Conference* (IEEE GLOBECOM'07), 26-30 November 2007, Washington, DC.

- H. Inaltekin and S. B. Wicker, "Random Access Games: Selfish Nodes with Incomplete Information", *Proceedings of IEEE MILCOM 2007*, Orlando, Florida.

- C. Tavoularis and S. B. Wicker, “Optimal sleep strategies with respect to traffic patterns in wireless sensor networks,” *Proceedings of the IEEE International Conference on Communications* (ICC ‘07), Scotland.

- P. Kuryloski, S. Pai, S. Wicker, Y. Xue, "MedSN System for In-Home Patient Monitoring: Architecture, Privacy and Security" *Proceedings of the Joint Conference on High Confidence Medical Devices, Software, and Systems* (HCMDSS'07) and Medical Device Plug-and-Play Interoperability (MD PnP'07), 25-27 June 2007, Boston, MA.

- H. Inaltekin and S.B. Wicker, "Random Access Game Under Incomplete Information", 4th Workshop on Embedded Networked Sensors 2007.

- H. Inaltekin, T. Wexler, S.B. Wicker, "A Duopoly Pricing Game for Wireless IP Services", *Proceedings of the Fourth Annual IEEE Communications Society Conference on Sensor, Mesh and Ad Hoc Communications and Networks* (SECON 2007), June 18 – 21, 2007, San Diego, CA.

- H. Inaltekin and S. B. Wicker, "The Behavior of Unbounded Path-loss Models and the Effect of Singularity on Computed Network Interference", *Proceedings of the Fourth Annual IEEE Communications Society Conference on Sensor, Mesh and Ad Hoc Communications and Networks* (SECON 2007), June 18 – 21, 2007, San Diego, CA.

- S. Pai, P. Kuryloski, H. Yip, S. Yennamandra, S. Wicker, K. Boehner, and G. Gay, "Networks Of Sensors In Public Spaces: Combining Technology With Art," *Proceedings of IEEE International Symposium on Ubiquitous Computing and Intelligence* (UCI'07), 21-23 May 2007, Niagara Falls, Ontario, Canada.

- S. Pai, T. Roosta, S. Wicker, and S. S. Sastry, "Using Social Network Theory Towards Development Of Wireless Ad hoc Network Trust," *Proceedings of 3rd IEEE International Symposium on Security in Networks and Distributed Systems* (SSNDS'07), 21-23 May 2007, Niagara Falls, Ontario, Canada.

- H. Inaltekin and S. B. Wicker, "The Analysis of a Game Theoretic MAC Protocol for Wireless Networks", Third Annual IEEE Communications Society Conference on Sensor, Mesh and Ad Hoc Communications and Networks (SECON 2006), September 25 – 28, Reston, VA.

- Hui Qu and Stephen B. Wicker, "Anchor-free localization in rapidly-deployed wireless sensor networks," in *Proc. of 2006 IEEE International Conference on Mobile Ad Hoc and Sensor Systems* (MASS), pp. 627--632.

- Hui Qu and Stephen B. Wicker, "A combined localization and location-based routing algorithm for rapidly-deployable wireless sensor networks," presented in the 2nd International Symposium on Innovations and Real-Time Applications of Distributed Sensor Networks, Crystal City, Washington DC, USA, October 16, 2006.

- H. Inalketin, S. B. Wicker, “A One-shot Random Access Game For Wireless Networks,” The International Conference on Wireless Networks, Communications, and Mobile Computing (WirelessCom 2005), June 13-16, 2005, Maui, Hawaii.

- X. Zhang, S. B. Wicker "Robustness vs. Efficiency in Sensor Networks,”, *Proceedings of Information Processing in Sensor Networks* (IPSN), Berkeley, 2005.

- X. Zhang, S. B. Wicker "Robustness vs. Efficiency for the Quadratic Gaussian CEO Problem,” Allerton Conference, 2004.

- P. Samar and S.B. Wicker, "Characterizing the Communication Links of a Node in a Mobile Ad Hoc Network," *Proceedings of ICC 2004*, Paris, France.

- X. Zhang, S. B. Wicker "How to distribute sensors in a random field," *Proceedings of Information Processing in Sensor Networks* (IPSN), Berkeley, 2004.

- M. Roth, S. Wicker, “Route Filtering in Swarm Intelligent MANETs,” Tenth Annual International Conference on Mobile Computing and Networking (MobiCom), Philadelphia, USA, 2004.

- P. Samar and S.B. Wicker, "On the Behavior of Communication Links of a Node in a Multi-Hop Mobile Environment," accepted for presentation at The Fifth ACM International Symposium on Mobile Ad Hoc Networking and Computing (MobiHoc), Tokyo, Japan, 2004.

- Y. Mourtada and S. Wicker, "LGMA: Localized Gradient Management Algorithm for Mobile Wireless Sensor Networks," *Proceedings of the Symposium on Defense & Security*, April 04.

- M. Roth, S.Wicker, “Termite: Emergent Ad-Hoc Networking,” *Proceedings of the Second Mediterranean Workshop on Ad-Hoc Networks*, Medhia, Tunisia, 2003.

- J. Chen, X. Zhang, T. Berger and S. B. Wicker "Rate Allocation in Distributed Sensor Network", *Proceedings of the Allerton Conference* 2003.

- M. Roth, S. Wicker, Termite: Ad-Hoc Networking with Stigmergy, IEEE Globecomm 2003, San Francisco, USA, 2003.

- Sakk, E. and Wicker, S.B., Wavelet packets for error control coding, *Proceedings of the SPIE 48th Annual Meeting* (Wavelets X), San Diego, CA, August 3-8, 2003.

- A. B. MacKenzie and S. B. Wicker, "Stability of Slotted Aloha with Multipacket Reception and Selfish Users," *Proceedings of Infocom 2003*.

- B. Krishnamachari, Y. Mourtada, and S. Wicker, "The Energy-Robustness Tradeoff for Routing in Wireless Sensor Networks," *Proceedings of IEEE 2003 International Conference on Communications,* ICC 2003, Anchorage, Alaska, May 2003.

- Y. Mourtada, M. Swanson, and S. Wicker, "Statistical Performance Analysis of Address-Centric Performance versus Data-Centric Directed Diffusion Approach in Wireless Sensor Networks," Aerosense 2003 Symposium on Battlespace Digitization and Network Centric Systems III, April 2003.

- Yurong Chen and Stephen B. Wicker, On Selection of Optimal Transmission Power for Ad hoc Networks, *Proceedings of the Hawaii International Conference on System Science* (HICSS-36), Big Island, Hawaii, Jan. 6-9, 2003.

- Y. Mourtada, and S. Wicker, "On the Effect on Robustness of Topological Factors in Wireless Sensor Networks", *Proceedings of the Workshop on Mobile and Wireless Networks MWN 2003*, December 2002.

- Ewald Hueffmeier, Janak Sodha, and Stephen B. Wicker, "On the Termination of the BCJR Algorithm," *Proceedings of the Third International Symposium on Communication Systems, Networks And Digital Signal Processing*, Staffordshire, England, 15-17 July 2002.

- Bhaskar Krishnamachari, Deborah Estrin, Stephen Wicker, ``The Impact of Data Aggregation in Wireless Sensor Networks," International Workshop on Distributed Event-Based Systems, (DEBS '02), held in conjunction with IEEE ICDCS, Vienna, Austria, July 2002.

- Bhaskar Krishnamachari, Ramon Bejar, and Stephen B. Wicker, "Distributed Problem Solving and the Boundaries of Self-Configuration in Multi-hop Wireless Networks" Hawaii International Conference on System Sciences (HICSS-35), January 2002.

- Bhaskar Krishnamachari, Stephen B. Wicker, and Ramon Bejar, "Phase Transition Phenomena in Wireless Ad-Hoc Networks" *Proceedings of Symposium on Ad-Hoc Wireless Networks, GlobeCom2001*, San Antonio, Texas, November 2001.

- A. B. MacKenzie and S. B. Wicker, "Game Theory in Communications: Motivation, Explanation, and Application to Power Control," *Proceedings of GlobeCom 2001*, San Antonio, Texas, November 2001.

- Bhaskar Krishnamachari, Rung-Hung Gau, Stephen B. Wicker, and Zygmunt J. Haas, "On the Performance of Sequential Paging for Mobile User

Location," *Proceedings of the IEEE Vehicular Technology Conference* (VTC Fall 2001), Atlantic City, New Jersey, October 2001.

- Deepak Ganesan, Bhaskar Krishnamachari, Alec Woo, David Culler, Deborah Estrin, and Stephen Wicker, "Large-scale Network Discovery: Design Tradeoffs in Wireless Sensor Systems," student poster presented at the 18th ACM Symposium on Operating System Principles, Banff, Canada, October 2001.

- A. B. MacKenzie and S. B. Wicker, "Selfish Users in Aloha: A Game-Theoretic Approach," *Proceedings of IEEE Vehicular Technology Conference* (VTC Fall 2001), Atlantic City, New Jersey, October 2001.

- Sakk, E., Wicker, S.B., "Finite Field Wavelet Packets for Error Control Coding", *Proceedings of 39th Annual Allerton Conference on Communication, Control and Computing*, Urbana-Champaign, Il, October 2001.

- Bhaskar Krishnamachari, Ramon Bejar, and Stephen B. Wicker, "Distributed Constraint Satisfaction and the Bounds on Resource Allocation in Wireless Networks" *Proceedings of the Sixth International Symposium on Communications Theory & Application* (ISCTA01), Ambleside, UK, July 2001.

- Gomes, C. P., Wicker, S. B., Xie, X., and Selman, B., "A Connection Between Phase Transitions in Complexity and Good Decoding," *Proceedings of the International Symposium on Information Theory and Its Applications*, Honolulu, Hawaii, November 5 – 8, 2000.

- Bhaskar Krishnamachari, and Stephen Wicker, "Fixed Network Design in Cellular Systems using Local Search Algorithms," *Proceedings of the IEEE Vehicular Technology Conference*, Boston, Massachusetts, September 2000.

- Z. Haas, J. Y. Halpern, L. Li, and S. B. Wicker, “A decision-theoretic approach to resource allocation in wireless multimedia networks,” *Proceedings of Dial M for Mobility*, 2000, pp. 86-95.

- Bhaskar Krishnamachari, Xi Xie, Bart Selman, and Stephen Wicker, "Analysis of Random Walk and Random Noise Algorithms for Satisfiability Testing," Sixth International Conference on Principles and Practice of Constraint Programming (CP 2000), Singapore, September 2000 (Lecture Notes in Computer Science, vol. 1894, Springer-Verlag, September 2000).

- M. E. Buckley, M. G. Ramos, S. H. Hemami, and S. B. Wicker, "Perceptually-Based Robust Image Transmission over Wireless Channels," *Proceedings of the 2000 International Conference on Image Processing*, Vancouver, B.C., September 10-13, 2000.

- M. E. Buckley, B. Krishnamachari, J. Hagenauer, and S. B. Wicker, "Improving Turbo Decoding via Cross-Entropy Minimization," *Proceedings of*

the IEEE International Symposium on Information Theory, Sorrento, Italy, June 25-30, 2000.

- X. Xie and S. B. Wicker, "Solving Large Scale Channel Allocation Problems with Splitting Algorithms," accepted for presentation at ICC 2000, New Orleans, Louisiana, June 18-22, 2000.

- B. Krishnamachari and S. Wicker, "Experimental Analysis of Local Search Algorithms for Optimal Base Station Location," *Proceedings of the International Conference on Evolutionary Computing for Computer, Communication, Control and Power (ECCAP 2000),* Chennai, India, January 2000.

- S. Kim and S. B. Wicker, "Improved Turbo Decoding Through Belief Propagation," *Proceedings of the IEEE Global Communications Conference*, Rio de Janeiro, Brazil, December 5-9, 1999.

- J. I. Park, Y. Choi, S. B. Wicker, and H. L. Owen, "Trellis Based Turbo Equalization Techniques for Mobile Radio Receiver," *Proceedings of the 1999 International Conference on Telecommunication*, Cheju, Korea, Jun. 15, 1999 - Jun. 18, 1999.

- J. Kosmach and S. B. Wicker, "Reconfigurable Two-Stage Trellis Decoding for Reed-Solomon Codes," *Proceedings of the International Conference on Communications*, June 6 - 10, 1999, Vancouver, B.C. Canada.

- J. Kosmach and S. B. Wicker, "Algebraic-Sequential Reed-Solomon Trellis Decoding," *Proceedings of the IEEE Vehicular Technology Conference*, May 16 - 20, 1999, Houston, Texas.

- T. Fine, S. B. Wicker, T. Berger, and J. Halpern, "Sensor-Assisted Multiple Access Protocols for Wireless Networks, " *Proceedings of the 1998 International Conference on Universal Personal Communications*, Florence, Italy, October 5 - 9, 1998.

- S. Kim and S. B. Wicker, "An Exploration of the Relationship Between the Baum-Welch Algorithm and Turbo Decoding, " *Proceedings of the 1998 International Symposium on Information Theory*, Boston, MA, August 16-21, 1998.

- T. Fine, S. B. Wicker, T. Berger, and J. Halpern, "Sensor-Assisted ALOHA for Wireless Networks, " *Proceedings of the 1998 International Symposium on Information Theory*, Boston, MA, August 16-21, 1998.

- J. I. Park, S. B. Wicker, and H. L. Owen, “Soft Output Adaptive Equalization for GMSK Mobile Radio,” *Proceedings of the IEEE Globecom ‘97*, Phoenix, Arizona, November 4 - 8, 1997.

- S. B. Wicker and J. J. Kosmach, “Advances in the Soft Decision Decoding of Reed-Solomon Codes,” *Proceedings of the 1997 IEEE Pacific Rim Conference for Communications, Computers, and Signal Processing*, Victoria, British Columbia, August 20 - 22, 1997.

- A. Luna and S. B. Wicker, “On Decreasing the Complexity of Trellis Decoding for Block Codes” *Proceedings of the Fourth International Symposium on Communication Theory and Applications*, Ambleside, U. K., July 13 - 18, 1997.

- P. Coulton, B. Honary, M. Darnell, and . B. Wicker, "Application of Turbo Codes to HF Data Transmission," *Proceedings of the Seventh International Conference on HF Radio Systems and Techniques*, Nottingham, U. K., July 7 - 10, 1997.

- I. Martin, B. Honary, G. Markarian, and S. B. Wicker, “Trellis Based Type-II Hybrid ARQ Protocols for Reed-Muller Codes” *Proceedings of the* 1997 IEEE International Symposium on Information Theory, Ulm, Germany, June 29 - July 4, 1997.

- M.-J. Hao, S. B. Wicker, “Reed-Solomon Error Control Coding In Multichannel FSK Coherent Lightwave Systems” *Proceedings of the* 1997 IEEE International Symposium on Information Theory, Ulm, Germany, June 29 - July 4, 1997.

- Park, J. I., Wicker, S. B., and Owen, H. L., “Soft Output Equalization Techniques for π/4-DQPSK Mobile Radio,” *Proceedings of the IEEE International Conference on Communications*, Montreal, Quebec, June 8 - 12, 1997

- A. Luna and S. B. Wicker, “Sequential ML Trellis Decoding for Block Codes” *Proceedings of the 1997 Conference on Information Sciences and Systems*, Baltimore, Maryland, March 19 - 21, 1997.

- Park, J.-I., Wicker, S. B., and Owen, H. L., "TDMA Cellular Soft Output Adaptive Equalization Based on the Modified-MAP Algorithm," *Proceedings of 1997 International Phoenix Conference on Computers and Communications*, Phoenix, pp. 557-562, February, 1997.

- Park, J.-I., Wicker, S. B., and Owen, H. L.,"Concatenation of MLSE Equalizer and Viterbi Decoder for TDMA Cellular Systems," pp. 723-727, Proceedings of 1996 MILCOM, McLean, Virginia, October 1996.

- Wang, X.-A., and Wicker, S. B., “The Design and Implementation of Optimal Trellis Decoders for Some BCH Codes,” *Proceedings of the 1996 International Symposium on Information Theory and Its Applications*, pp. 700 - 703, Victoria, B. C., Canada, September 17 - 20, 1996.

- Wang, X.-A., and Wicker, S. B., "Recent Results: The Design and Implementation of Optimal Trellis Decoders for Some BCH Codes," *Abstracts, 1996 IEEE Information Theory Workshop*, pg. 73, Haifa, Israel, June 9 - 13, 1996.

- Tapp, T., Wang, X.-A., and Wicker, S. B., "Soft Decision Hybrid-ARQ Error Control for Mobile Data Networks," *Proceedings of the 1996 International Conference on Communications Technology*, pp. 756 - 759. Beijing, China, May 5 - 7, 1996.

- Hao, M. J., and Wicker, S. B., "The Effect of Error Control Coding in Multichannel FSK Coherent Lightwave Communication Systems" *Proceedings of the 1996 IEE International Conference on Telecommunications*, pp. 398 - 405, Istanbul, Turkey, April 14 - 17, 1996.

- Souissi, S., and Wicker, S. B., "Dynamic Performance of a Random Access, Code Combining CDMA System," *Proceedings of the Sixth IEEE International Symposium on Personal, Indoor, and Mobile Radio Communications*, Toronto, Canada, September 27 - 29, 1995.

- Wang, X.-A. and Wicker, S. B., "A Soft Output Decoding Algorithm for Concatenated Systems," *Proceedings of IEEE International Symposium on Information Theory*, pg. 475, Whistler, British Columbia, Canada, September 17 - 22, 1995.

- Zaidan, M. Y., Barnes, C., and Wicker, S. B., "Tree-Structure Trellis Codes," *Proceedings of IEEE International Symposium on Information Theory*, pg. 185, Whistler, British Columbia, Canada, September 17 - 22, 1995.

- Wang, X.-A. and Wicker, S. B., "An Artificial Neural Net Viterbi Decoder," *Proceedings of IEEE International Symposium on Information Theory*, pg. 173, Whistler, British Columbia, Canada, September 17 - 22, 1995.

- Tapp, T., Wang, X.-A., and Wicker, S. B., "Soft Decision Decoders for Mobile Data Networks," *Proceedings of the Jamaican Conference on Communications*, pp. 36 - 39, Ocho Rios, Jamaica, August 18 - 20, 1995.

- Wang, X.-A. and Wicker, S. B. "A Neuralized Viterbi Decoder, *Proceedings of the 3rd International Symposium on Communication Theory and Applications*, Ambleside, England, 10 - 14 July, 1995.

- Wang, X.-A. and Wicker, S. B. "Generation and Performance of Efficient Soft Outputs in Viterbi Decoding," *Proceedings of the Seventh Joint Swedish-Russian International Workshop on Information Theory*, pp. 248 - 253, St. Petersburg, Russia, June 17 - 22, 1995.

- Wang, X.-A. and Wicker, S. B. "Viterbi Decoding with Soft Outputs and Adaptive Decoding Depth," *Proceedings of the Conference on Information*

Sciences and Systems, pp. 37 - 43, The Johns Hopkins University, March 22 - 24, 1995.

- Wang, X.-A. and Wicker, S. B. "Generalized Soft Decision Decoding for Concatenated Systems," *Proceedings of the 3rd UK/Australian International Symposium on DSP for Communication Systems*, Coventry, UK, 12 - 14 December, 1994.

- Alabbadi, M., and Wicker, S. B., "A Digital Signature Scheme Based on Linear Block Codes," *Proceedings of ASIACRYPT'94*, Sydney, Australia, November 28 - December 1, 1994.

- Souissi, S., and Wicker, S. B., "Performance Analysis of a Random Access, Direct Sequence, Packet Combining, Code Division Multiple Access System," Communications Theory Mini- Conference '94 (Globecom '94), San Francisco, CA, November 27 - December 1, 1994.

- Alabbadi, M., and Wicker, S. B., "Combined Data Encryption and Reliability Using McEliece's Public Key Cryptosystem," *Proceedings of the International Symposium on Information Theory and Its Applications*, pp. 263 - 268, Sydney, Australia, November 20-25, 1994.

- Rasmussen, L. and Wicker, S. B., "A Performance Analysis for TCM Diversity Receivers Using Two Different Diversity Combining Techniques," *Proceedings of the IEEE Personal, Indoor, and Mobile Radio Commmunications Conference*, The Hague, Netherlands, September 19 – 23, 1994.

- Souissi, S. and Wicker, S. B., "Packet Combining Error Control for CDMA Systems," *Proceedings of the IEEE Third International Symposium on Spread Spectrum Techniques and Applications*, pp. 248-252, July 4 - 6, 1994, Oulu, Finland.

- Alabbadi, M. and Wicker, S. B., "Susceptibility of Digital Signature Schemes Based on Error-Correcting Codes to Universal Forgery," *Proceedings of the 1994 IEEE International Symposium of Information Theory*, pg. 494, June 27 - July 1, 1994, Trondheim, Norway.

- Rasmussen, L. and Wicker, S. B., "Performance Approximation for Trellis Coded Diversity Receivers over Slowly Fading Rayleigh Channels," *Proceedings of the 1994 IEEE International Symposium of Information Theory*, pg. 25, June 27 - July 1, 1994, Trondheim, Norway.

- Souissi, S. and Wicker, S. B., "A Diversity Combining DS/CDMA System with Convolutional Encoding and Viterbi Decoding," *Proceedings of the 1994 IEEE International Conference on Communications*, pp. 1412 - 1416, May 1 - 5, 1994, New Orleans, Louisiana.

- Rasmussen, L. and Wicker, S. B., "A Comparison of Two Error-Detection Schemes for Trellis Coded Hybrid-ARQ Protocols", *Proceedings of the Second International Symposium on DSP in Communication Systems*, 26- 29 April, 1994, Adelaide, South Australia.

- Rasmussen, L., Bartz, M., and Wicker, S. B., "A Comparison of Trellis Coded and Reed-Solomon Coded Hybrid-ARQ Protocols over Slowly Fading Channels", *Proceedings of the International Conference on Universal Wireless Access*, 18 - 19 April, 1994, Melbourne, South Australia.

- Rasmussen, L. and Wicker, S. B., "A Performance Analysis of Trellis Coded, Hybrid-ARQ Protocols based on CRC Error-Detecting Codes," *Proceedings of the IEEE Global Communications Conference*, pp. 86-90, Houston, Texas, December 1993.

- Souissi, Slim and Wicker, S. B., "Application of Packet Combining Techniques to a DS/CDMA System Using Convolutional Encoding and Sequential Decoding", *Proceedings of the Second UK-CIS International Symposium on Communication Theory and Its Applications,*, pp. 167-174, July 12 - 16, 1993, Charlotte Mason College, Ambleside, Lake District, United Kingdom.

- Bartz, M. and Wicker, S. B., "Type-I and Type-II Reed-Muller Hybrid-ARQ Protocols" *Proceedings of the 1993 IEEE International Communications Conference*, pp. 1515-1520, May 23 - 26, 1993, Geneva, Switzerland.

- Rasmussen, L. and Wicker, S. B., "A Performance Analysis of Trellis Coded, Adaptive Rate Hybrid-ARQ Protocols over AWGN Channels," *Proceedings of the 1993 International Symposium on Information Theory*, pg. 384, San Antonio, Texas, January 17 - 22, 1993.

- Alabbadi, M. and Wicker, S. B., "Digital Signature Schemes Based on Error-Correcting Codes," *Proceedings of the 1993 International Symposium on Information Theory*, pg. 199, San Antonio, Texas, January 17 - 22, 1993.

- Rasmussen, L. K. and Wicker, S. B., "A Performance Analysis of Trellis Coded Hybrid-ARQ Protocols in a Fading Environment," *Proceedings of the 1992 IEEE Global Telecommunications Conference*, Orlando, Florida, December 6 - 9, 1992.

- Wicker, S. B. and Alabbadi, M., "Integrated Security and Error Control for Communication Networks Using the McEliece Cryptosystem," *Proceedings of the 1992 IEEE International Carnahan Conference on Security Technology*, pp. 172 - 178, Atlanta, Georgia, October 14 - 16, 1992.

- Harvey, B. A. and Wicker, S. B., "Packet Combining Systems Based on the Viterbi Decoder," *Proceedings of the 1992 IEEE Military Communications Conference*, pp. 757 - 761, San Diego, California, October 11 - 14, 1992.

- Rasmussen, L. K. and Wicker, S. B., "A Performance Analysis for Trellis Coded Hybrid-ARQ Protocols," *Proceedings of the 1992 IEEE International Communications Conference*, pp. 647 - 651, Chicago, Illinois, June 14 - 17, 1992.

- Wicker, S. B., "Adaptive Rate Convolutional Coding using the Viterbi Decoder," *Proceedings of the International Winter Meeting on Coding and Information Theory*, p. 25 (summary), Essen, Germany, December 15 - 17. 1991.

- Wicker, S. B., "A Reed-Solomon Hybrid-ARQ Protocol with Erasure Decoding for Mobile Communication Networks," *Proceedings of the International Symposium on Personal, Indoor, and Mobile Radio Communications*, London, England, September 23 - 24, 1991.

- Wicker, S. B. and Rice, M., "A Sequential Testing Scheme for Adaptive Error Control on Slowly Varying Channels" *Proceedings of the 1991 International Symposium on Information Theory*, Budapest, Hungary, pg. 30, June 23 - 28, 1991.

- Cornett, K. G. and Wicker, S. B., "Bit Error Rate Estimation Techniques for Digital Mobile Radios," *Proceedings of the 41st Annual IEEE Vehicular Technology Conference*, St. Louis, Missouri, May 19 - 22, 1991.

- Wicker, S. B., "Reed-Solomon Error Control Coding for Data Transmission over Personal Communication Networks," *Proceedings of the IEEE Southeastcon 1991*, Williamsburg, Virginia, pp. 437 - 441, April 7 - 10, 1991.

- Rice, M. D. and Wicker, S. B., "Adaptive Rate Coding for Slowly Varying Channels." *Proceedings of the 1990 SBT/IEEE International Telecommunications Symposium*, Rio de Janerio, Brazil, pp. 176 - 180, September 3 - 6, 1990.

- Wicker, S. B., "Trellis Coded Hybrid-ARQ Error Control," *Proceedings of the 1990 Bilkent International Conference on New Trends in Communications, Control, and Signal Processing*, Ankara Turkey, pp. 339 - 346, July, 2 1990.

- Harvey A. B. and Wicker, S. B., "Error-Trapping Viterbi Decoding in a Type-I Hybrid-ARQ Protocol," *Proceedings of the 1990 IEEE International Conference on Communications*, Atlanta, Georgia, pp. 332.5.1 - 332.5.5, April 16 - 19, 1990.

- Rice, M. D. and Wicker, S. B., "Modified Majority-Logic Decoding of Cyclic Block Codes," *Proceedings of the 1990 IEEE International Conference on Communications*, Atlanta, Georgia, pp. 332.3.1 - 332.3.5, April 16 - 19, 1990.

- Wicker, S. B. and Harvey B., "Error-Trapping Viterbi Decoding in Type-I

Hybrid-ARQ Protocols" 1990 International Symposium on Theory, San Diego, California, Paper WA2-6, January 17, 1990.

- Wicker, S. B., "Adaptive Rate Coding Using Reed-Solomon Codes in a Hybrid-ARQ Protocol," *Proceedings of the 1989 International Symposium on Signals, Systems, and Electronics*, Nürnberg, West Germany, pp. 642 - 645, September 18, 1989.

- Wicker, S. B. "Hybrid-ARQ Reed-Solomon Coding in an Adaptive Rate System," *Proceedings of the 1989 IEEE International Conference on Communications*, Boston, Massachusetts, pp. 45.5.1 - 45.5.5, June 11, 1989.

- Wicker, S. B., "An Error Control Technique for High Data Rate Communication Networks," *Proceedings of the 1989 IEEE INFOCOM Conference*, Ottawa, Ontario, pp. 594 - 601, April 25, 1989.

- Wicker, S. B., "An Adaptive Type-I Hybrid-ARQ Technique Using the Viterbi Decoding Algorithm," *Proceedings of the 1988 IEEE Military Communications Conference*, San Diego, California, pp. 15.5.1 - 15.5.5, October 23, 1988.

- Wicker, S. B., "Cyclic Codes and Rational Curves," 1988 International Symposium on Information Theory, Kobe, Japan, Paper Number MC7-2, June 19, 1988.

- Wicker, S. B. and Welch, L. R., "The Geometry of MDS Codes," *Proceedings of the 1987 IEEE Pacific Rim Conference for Communications, Computers, and Signal Processing*, Victoria, British Columbia, pp. 89 - 92, June 4, 1987.

Invited Conference Papers

- Wicker, S. B., "Markov Chains, Error Control, and the Advent of Turbo Coding," IMA Workshop on Codes, Systems and Graphical Models, Minneapolis, MN, August 2-13, 1999.

- Buckley, M. E. and Wicker, S. B., " Optimization, Neural Networks, and Turbo Decoding," *Proceedings of the Fifth International Symposium on Communication Theory and Applications*, Ambleside, U. K., July 12 - 16, 1999.

- Kim, S. and Wicker, S. B., "A Connection Between the Baum-Welch Algorithm and Turbo Decoding," *Proceedings of the Information Theory Workshop*, Killarney, Ireland, June 22-26, 1998.

- Wicker, S. B., "Error Control in Space Applications," 1995 Central Section Meeting of the American Mathematical Society, Chicago, Illinois, March 24 - 25, 1995.

- Wicker, S. B., “Error Control Techniques for Voice and Data Communications over Cellular Mobile Channels,” *Proceedings of the Allerton Conference on Communication, Control, and Computing,* pp. 444 - 453, September 28 – 30, 1994.

- Wicker, S. B. and Alabbadi, M., “Susceptibility of Digital Signature Schemes Based on Error-Correcting Codes to Universal Forgery,” Workshop on Information Protection, Moscow, Russia, December 6 - 9, 1993.

- Wicker, S. B., “Reed-Solomon Error Control Systems for Bidirectional Fading Channels”, *Proceedings of the International Conference on Selected Topics in Wireless Communication*, pp. 76 - 79, Vancouver, British Columbia, Canada, June 25 - 26, 1992.

- Wicker, S. B., “Type-II Hybrid-ARQ Protocols Using Punctured Reed-Solomon Codes,” *Proceedings of the 1991 IEEE Military Communications Conference*, McLean, Virginia, pp. 52.2.1 - 52.2.6, November 4 - 6, 1991.

- Wicker, S. B., “An Adaptive Rate Coding System Based on the Use of Majority-Logic Decoding in a Hybrid-ARQ Protocol,” *Proceedings of the 1989 IEEE Military Communications Conference*, Boston, Massachusetts, pp. 29.6.1 - 29.6.6, October 15, 1989.

Invited Seminar Presentations

- Salzburg University of Applied Sciences (2) April, 2016
- Vanderbilt University, March 2009
- Carnegie Mellon University, April 2008
- Indian Institute of Technology, Kanpur, January 2006.
- Indian Institute of Technology, New Delhi, January 2006.
- Chalmers University, Sweden, September 2004.
- Queens University, Canada, May 2004.
- McMaster University, Canada, February 2004.
- University of the West Indies, Barbados, December, 2002.
- Dartmouth College, October, 2002.
- University of the West Indies, Barbados, December, 2001.
- Wicker, S. B., "Evolutionary Game Theory and Self-Configuring Wireless Networks," UCLA, Los Angeles, CA, November 2, 2000.
- Wicker, S. B., "Optimization, Neural Networks, and Turbo Decoding," University of Ulm, Germany, July 23, 1999.
- Wicker, S. B., "Optimization, Neural Networks, and Turbo Decoding," Technical University of Munich, Germany, June 16, 1999.
- Wicker, S. B., "The Baum-Welch Algorithm and Turbo Decoding," Technical University of Denmark, Copenhagen, March 20, 1998.
- Wicker, S. B., “Maximum Likelihood Sequential Soft Decision Decoding for Block Codes,” Jet Propulsion Laboratory/CalTech, Pasadena, California, December 30, 1997.

- Wicker, S. B., “Hard and Soft Decision Decoders for the FLEX Mobile Messaging Protocol,” Motorola Paging Division, Fort Worth, Texas, November 24, 1997.
- Wicker, S. B., “Soft Decision and Turbo Error Control for Wireless Multimedia Networks,” Motorola Paging Division, Fort Worth, Texas, November 24, 1997.
- Wicker, S. B., “Turbo Codes, Bayesian Networks, and the Future of Telecommunications,” SUNY Buffalo, Department of Electrical Engineering, May 23, 1997.
- Wicker, S. B., “Soft Decision Trellis Decoders for Block Codes: Thoughts on the State of the Art,” Lancaster University, Lancaster, England , January 14, 1997.
- Wicker, S. B., “Introduction to the Cornell Wireless Multimedia Laboratory,” Distinguished Seminar Series, Queen’s University, November 13, 1996.
- Wicker, S. B., “Introduction to the Cornell Wireless Multimedia Laboratory,” GTR Corporate Research and Development, Schenectady, New York, September 26, 1996.
- Wicker, S. B., “Enabling Technologies for Wireless Multimedia Systems,” Strathclyde University, Glasgow, Scotland, August 15, 1996.
- Wicker, S. B., “Wireless Technologies and the Evolution Toward the Universal Mobile Telecommunication System,” National Technical University of Athens, Athens, Greece, September 4, 1995.
- Wicker, S. B., “Wireless Technologies and the Evolution Toward the Universal Mobile Telecommunication System,” University of Athens, Department of Telematics, Athens, Greece, September 5, 1995.
- Wicker, S. B., “Wireless Technologies and the Evolution Toward the Universal Mobile Telecommunication System,” Telecommunications Systems Institute, Chania, Crete, September 7, 1995.
- Wicker, S. B., “Error Control Coding for Mobile Applications,” Jet Propulsion Laboratory, Pasadena, California, October 18, 1994.
- Wicker, S. B., “Reed-Solomon Error Control Systems for Bidirectional Fading Channels”, Lancaster University, Lancaster, England, June 21, 1994.
- Wicker, S. B., “Intelligent Systems for Error Control and Security”, Defense Science and Technology Organization, Adelaide, South Australia, May 2, 1994.
- Wicker, S. B., “Reed-Solomon Error Control Systems for Bidirectional Fading Channels”, Simon Fraser University, British Columbia, Canada, June 24, 1992.
- Wicker, S. B., “Reed-Solomon Error Control Systems for Bidirectional Fading Channels”, University of British Columbia, Vancouver, British Columbia, Canada, June 23, 1992.
- Wicker, S. B., “Adaptive Error Control Using Convolutional and Trellis Codes”, University of Victoria, Victoria, British Columbia, Canada, June 22, 1992.
- Wicker, S. B., “Reed-Solomon Error Control Systems for Bidirectional Fading Channels”, University of Victoria, Victoria, British Columbia, Canada, June 19, 1992.

- Wicker, S. B., “Reed-Solomon Error Control Systems for Bidirectional Fading Channels”, Institute of Communications Technology, German Aerospace Research Establishment, Oberpfaffenhofen, Germany, February 4 - 6, 1992.
- Wicker, S. B., "The Application of Classical Algebraic Geometry to Error Correcting Codes," Department of Mathematics, University of Puerto Rico, Rio Piedras, Puerto Rico, December 9 - 15, 1988.

Patents and Patent Applications

- Wicker, S.B., “*Private Overlay for Information Networks*”, U.S. Patent No. 9,813,233, 7 November, 2017 – assigned to Cornell University.

- Ober, C.K., O'Rourke, T.D., Spencer, M.G., Turner, J.N., Wicker, S.B., “*Flexible Substrate Sensor System For Environmental And Infrastructure Monitoring*”, U.S. Patent No. 8,701,469, 22 April 2014 – assigned to Cornell University.

- Fontaine, F. and Wicker, S.B., “*Method and Apparatus for Turbo Decoding Block Codes*”, U.S. Patent 7,243,288, 10 July 2007 – assigned to Motorola Inc.

- Wicker, S.B. and Fine, T.L., “*Sensor-Assisted ALOHA Multiple Access*”, U.S. Patent No. 6,404,750, 11 June 2002 – assigned to Cornell University.

- Wang, X.A. and Wicker, S. B., “*Artificial Neural Network Viterbi Decoding System and Method*,” U.S. Patent No. 5,548,684, 20 August, 1996 – assigned to Georgia Tech Research Corporation.

Other Publications

- Alabbadi, M. and Wicker, S. B., “Integration of Error Correction, Encryption, and Signature Using Linear Error-Correcting Block Codes,” *IEEE Information Theory Newsletter*, Volume 43, Number 4, p. 10, December 1993.

- Rasmussen, L. K. and Wicker, S. B., “Trellis Coded Adaptive Rate Hybrid-ARQ Protocols over AWGN and Slowly Fading Rician Channels,” *IEEE Information Theory Newsletter*, Volume 43, Number 4, p. 10, December 1993.

- Harvey, B. A. and Wicker, S. B., “Adaptive Rate Convolutional Coding Using the Viterbi Decoder,” *IEEE Information Theory Newsletter*, Volume 41, Number 3, p. 15, September 1991.

- Rice, M. D. and Wicker, S. B., “Adaptive Error Control over Slowly Varying

Channels," *IEEE Information Theory Newsletter*, Volume 41, Number 2, p. 20, June 1991.

Funded Research Projects

- "Toward a Statewide Public Internet of Things (IoT) network," National Science Foundation, $1,499,992, October 1, 2020 – September 30, 2023.

- "Towards an Emergency Edge Supercloud," National Institute of Standards and Technology, $1,250,000, August 15, 2017 – August 15, 2019.

- "STC: Team for Research in Ubiquitous Secure Technology (TRUST)," National Science Foundation, $40,000,000, September 15, 2005 - September 15, 2018.

- "TC: Privacy-Aware Design Strategies For Mobile Communications And Computing," National Science Foundation, $500,000, June 15, 2010 – June 14, 2013.

- "Nets-NOSS: NETS - NOSS: Ultra Low-Power, Self-Configuring, Wireless Sensor Networks," National Science Foundation, $2,000,000, September 15, 2004 - September 15, 2009.

- "ITR: Self-Configuring Sensor Networks for Disaster Mitigation and Recovery," National Science Foundation, $2,500,000, September 15, 2003 -- September 15, 2009.

- "SENSORS: The Reachback Channel in Wireless Sensor Networks," (PI: Sergio Sevetto), National Science Foundation. September 15, 2003 -- September 15, 2006.

- "The Ad Hoc Classroom: Integrating Emerging Wireless Communications and Networking Technologies into Mainstream Computer Science and Electrical Engineering Curricula," National Science Foundation-CRCD, (PI: Gun Sirer), $410,000, 2002 – 2005.

- "The Ad Hoc Classroom: Integrating Emerging Wireless Communications and Networking Technologies into Mainstream Computer Science and Electrical Engineering Curricula," Microsoft, (PI: Gun Sirer), $75,000, 2002 – 2005.

- "The Ad Hoc Classroom: Integrating Emerging Wireless Communications and Networking Technologies into Mainstream Computer Science and Electrical Engineering Curricula," Hewlett Packard, (PI: Gun Sirer), $20,000, 2002 – 2005.

- "Self-Configuring Wireless Sensor Networks," DARPA ITO, $900,000, June

1, 2000 - May 31, 2003.

- “Soft Decision Decoders for Wireless Systems,” Motorola, $84,000, September 15, 1998 – September 15, 2000.

- “Sensor-Assisted Wireless Multimedia Systems,” National Science Foundation Grant NCR-9725251, $862,465, September 15, 1997 - August 31, 2000 (with Terrence Fine and Joseph Halpern).

- “Coded Diversity Combining and Channel Estimation for Wireless Data Communications,” National Science Foundation Grant NCR-9706592, $ 246,636, September 15, 1997 - August 31, 2000 (with Zygmunt Haas).

- AT&T/Lucent Technologies Foundation, Special Purpose Grant, $15,000, November 20, 1996.

- “Adaptive Code Division Multiple Access Systems,” National Science Foundation Grant Number Grant NCR-9505887, $ 236,855, September 15, 1995 - August 31, 1998

- “Data Transport on Cellular Telephone Systems,” Mobile Telecommunication Technologies International, $110,000, July 1, 1995 - June 30, 1996.

- “European Data Transfer Protocols,” Mobile Telecommunication Technologies International, $92,000, July 1, 1994 - June 30, 1995.

- "Soft Decision Decoding For Block Codes Using Artificial Neural Networks," National Science Foundation Grant Number NCR-9216686, $140,000, September 15, 1993 - March 14, 1996.

- “Adaptive Bandwidth-Efficient Coding for Nonstationary Channels,” National Science Foundation Grant NCR-9016276, $102,000, September 15, 1991 - March 14, 1994.

- “Cellular Mobile Telephony Laboratory,” Mitsubishi Consumer Electronics, $500,000 (Equipment), May 29, 1991.

- “Adaptive Coding on Nonstationary Communication Channels with Feedback,” National Science Foundation Grant NCR-9009877, $85,000, September 15, 1990 - September 14, 1993.

- “Young Faculty Grant,” General Electric, $10,000, July 15, 1989 - July 14, 1990.

- “Cellular Radio Diversity Simulation Study,” Bell South Mobility, Coprincipal Investigator: Gordon L. Stuber, $60,000, March 25, 1989 - June 25, 1989.

- "An Investigation of Message Handling in Post 2000 Era," U. S. Army Signal Center, Fort Gordon, Coprincipal Investigator: Douglas W. Browning, $137,161, January 10, 1989 - December 31, 1989.

- "Cellular Radio Simulation and Coding Study," Bell South Mobility, $35,000, December 15, 1988 - March 15, 1989.

- "Cellular Radio Spectrum Study," Bell South Mobility, $30,000, September 25, 1988 - December 15, 1988.

- "The Algebraic Foundations of Digital Communication," AT&T Foundation, $25,000, July 7, 1988 - July 6, 1989.

- "Cellular Radio Spectrum Study," Bell South Mobility, $45,000, June 15, 1988 - September 15, 1988.

- "Cellular Radio Spectrum Study," Bell South Mobility, $40,000, March 15, 1988 - June 15, 1988.

- "Communication System Simulation Software Package," Space and Communications Group, Hughes Aircraft Company, $200,000 (software), February 1, 1988.

Service

Institute of Electrical and Electronic Engineers (IEEE)

- Elected to Board of Governors, IEEE Information Theory Society, 1996 – 1998, re-elected for 1999 - 2001.

- Information Theory Society representative to IEEE Committee on New Technology Directions

Defense Advanced Research Projects Agency (DARPA)

- Member, Information Science and Technology Study Group, 1999 – 2002.

- Chair, ISAT Study on Wireless Sensor Networks, 2000 – 2001.

Journals

- Editor, *ACM Transactions on Sensor Networks*, 2004 - 2010.

- Editor, Special Issue on Ad Hoc Networks, Volume 2, *IEEE Journal on Special Areas in Communications*, 2005.

- Editor, Special Issue on Sensor Networking, *IEEE Journal on Special*

Areas in Communications, 2004.

- Editor, Special Issue on Ad Hoc Networks, *IEEE Journal on Special Areas in Communcations*, 2004.

- Editor, Special Issue on Energy-Aware Ad Hoc Wireless Networks, *IEEE Wireless Communications*, August 2002.

- Editor for Coding Theory and Techniques, *IEEE Transactions on Communications*, March, 1995 - March 2001.

- Reviewer for numerous journals, conferences, national and international funding agencies, and textbook publishers.

Conference Organization

- Chair, Technical Program Committee, Fifth International Symposium on Information Processing in Sensor Networks (IPSN 2006), Nashville, Tennessee.

- Member, Technical Program Committee, International Conference on Distributed Computing in Sensor Networks (DCOSS '06).

- Member, Technical Program Committee, Fourth International Symposium on Information Processing in Sensor Networks (IPSN 2005), Berkeley, California.

- Member, Technical Program Committee, Conference on Innovations and Commercial Applications of Distributed Sensor Networks, Bethesda, MD, October 18 –19, 2005.

- Member, Technical Program Committee, Second IEEE International Conference on Sensor and Ad Hoc Communications and Networks (SECON 2005).

- Member, Organizing Committee, First IEEE Conference on Sensor Networks: Applications, Protocols and Technology (SNAPT 2004).

- Member, Technical Program Committee, First Annual IEEE Communications Society Conference on Sensor and Ad Hoc Communications and Networks, Santa Clara CA, October 2004.

- Member, Technical Program Committee, Third International Symposium on Information Processing in Sensor Networks (IPSN '04), Berkeley, California, USA April 26-27, 2004

- Member, Organizing Committee, 7th International Symposium on Communication Theory and Applications, Ambleside, England, 2003

- Member, Technical Program Committee, First IEEE International Workshop on
  Sensor Network Protocols and Applications, May 11, 2003, Anchorage, AK.

- Chair, IEEE Information Theory Society Symposia and Workshops Committee, 2000 - 2001.

- Organizing Committee, 6th International Symposium on Communication Theory and Applications, Ambleside, England, 2001

- Member, International Advisory Committee, 2000 International Symposium on Information Theory and its Applications, Honolulu, November 5 - 8, 2000.

- Technical Program Committee, 1999 IEEE Wireless Communications & Networking Conference (WCNC), New Orleans, LA, Sep. 22 - 27, 1999.

- Organizing Committee, 5th International Symposium on Communication Theory and Applications, Ambleside, England, 10-14 July, 1999

- Technical Program Committee, International Symposium on Information Theory and Applications, Mexico City, Mexico, October 14 - 16, 1998.

- Chaired "ARQ and Wireless Error Control" session at the 1998 International Symposium on Information Theory, Boston, MA, August 16-21, 1998.

- Organizing Committee, 4th International Symposium on Communication Theory and Applications, Ambleside, England, 11 - 15 July, 1997

- Technical Program Committee, International Symposium on Information Theory and Applications, Victoria, British Columbia, September 17-21, 1996.

- Organized and chaired "Gus Solomon Memorial Session" at IEEE Pacific Rim Conference on Communications, Computers, and Signal Processing, Victoria, British Columbia, August 20-22, 1997.

- Chaired "Mobile Communications" session at the International Symposium on Information Theory and Applications, Victoria, British Columbia, September 17-21, 1996.

- Chaired "Advanced Subsystems in Wireless Multimedia Networks" session at the Japan-Canada International Workshop on Multimedia Wireless Communications and Computing, Victoria, British Columbia, September 17, 1996.

- Technical Program Committee, IEEE Vehicular Technology Conference,

Atlanta, Georgia, April 28 - May 1, 1996.

- Chaired "Communication Networks" session at the 3rd International Symposium on Communication Theory and Applications, Ambleside, England, 10 - 14 July, 1995.

- Chaired "Decoding Problems" session at Seventh Joint Swedish-Russian International Workshop on Information Theory, St. Petersburg, Russia, June 17 - 22, 1995.

- General Chairman, Wireless Security Workshop, Metz, France, February 10 - 11, 1995.

- U. S. Representative, International Advisory Board, IEEE International Symposium on Information Theory, Whistler, British Columbia, Canada, September 17 - 22, 1995.

- Chaired "Coding and Modulation" session at the 3rd UK/Australian International Symposium on DSP for Communication Systems, Warwick, UK, 12 - 14 December, 1994.

- Chaired "Error Control Techniques" session at 1990 IEEE International Conference on Communications, Atlanta, Georgia, April 16 - 19, 1990.

University Committees, Cornell University

- Chairman, Electrical and Computer Engineering Policy Committee (elected) (1998-2000, 2019 - present)
- Member, University Faculty Committee for Program Review (appointed by Faculty Senate) (2018 – 2021)
- Chairman, Electrical and Computer Engineering General Recruiting Committee (elected) (2009 – 2012)
- Member, University Local Advisory Committee (appointed by Faculty Senate) (2008 – 2011)
- Member, Faculty Advisory Board for Information Technology, (appointed by Faculty Senate) (2004 - 2007)
- Member, University Intellectual Property Advisory Committee, (appointed by VP for Research) (2003 - 2012)
- Chairman, College of Engineering Curriculum Governing Board (appointed) (2001 - 2002)
- Chairman, Electrical Engineering Curriculum and Standards Committee (elected) (2001 -2002)
- Chairman, Electrical Engineering PeopleSoft Lab Oversight Committee (1997-2003)
- Member, College of Engineering Dean Search Committee (2000-2002)
- Member, College of Engineering Teaching Award Committee (1999-2000)
- Member, Applied Mathematics Director Search Committee (1999)

- Member, Associate Dean Search Committee, 1998.
- Member, Electrical Engineering Policy Committee (elected) (1997-2000)
- Member, Digital Systems Search Committee (1997-1998)
- Member, College Faculty Advisory Committee for Associate Dean for Professional Development (1998)
- Chairman, Several Department and College Ad Hoc Tenure and Promotion Committees and Hiring Committees.

Institute Committees, Georgia Institute of Technology

- Institute Statutory Advisory Committee (elected) (1995 - 1997)
- Institute Public Relations Committee (elected) (1990 - 1992)
- ECE Graduate Curriculum Committee (1995 - 1997)
- ECE Undergraduate Curriculum Committee (1994 - 1995)
- ECE Computer Resources Committee (1988 - 1991)

Honors and Awards

- Merrill Cornell Presidential Teaching Award, 2012
- Cornell University College of Engineering Teaching Award, 2012
- Fellow of the IEEE, 2011
- U.S. Air Force Scientific Advisory Board, 2010
- Cornell University College of Engineering Teaching Award, 2009
- Cornell School of ECE Teaching Award, 2000
- Cornell University College of Engineering Teaching Award, 1998
- SAIC Best Paper Award, 1994, for “An Artificial Neural Net Viterbi Decoder” (with Xiao-an Wang)
- Senior Member, Institute of Electrical and Electronic Engineers. Elected January, 1993
- Visiting Fellow, British Columbia Advanced Systems Institute. Awarded January 1992.
- Sigma Xi, 1991 - present
- Tau Beta Pi, 1980 - present
- Eta Kappa Nu, 1980 - present
- Omicron Delta Kappa, 1980 – present