Trials@uspto.gov
571-272-7822

Paper 8
Entered: March 13, 2025

UNITED STATES PATENT AND TRADEMARK OFFICE

BEFORE THE PATENT TRIAL AND APPEAL BOARD

GENIUS SPORTS LTD.,
Petitioner,

v.

SPORTSCASTR INC.
d/b/a PANDA INTERACTIVE,
Patent Owner.

IPR2024-01305
Patent 10,805,687 B2

Before BARBARA A. PARVIS, JOHN A. HUDALLA, and SHARON FENICK, *Administrative Patent Judges*.

HUDALLA, *Administrative Patent Judge*.

DECISION
Granting Institution of *Inter Partes* Review
35 U.S.C. § 314

Genius Sports Ltd. ("Petitioner") filed a Petition (Paper 1, "Pet.") requesting an *inter partes* review of claims 1–9 ("the challenged claims") of U.S. Patent No. 10,805,687 B2 (Ex. 1003, "the '687 patent"). Petitioner filed a Declaration of Stephen B. Wicker, Ph.D. (Ex. 1001) with its Petition. SportsCastr Inc. d/b/a PANDA Interactive ("Patent Owner") filed a Preliminary Response (Paper 7, "Prelim. Resp."). Patent Owner filed a Declaration of Aviel Rubin, Ph.D. (Ex. 2001) with its Preliminary Response.

We have authority to determine whether to institute an *inter partes* review. *See* 35 U.S.C. § 314 (2018); 37 C.F.R. § 42.4(a) (2023). Under 35 U.S.C. § 314(a), we may not authorize an *inter partes* review unless the information in the petition and the preliminary response "shows that there is a reasonable likelihood that the petitioner would prevail with respect to at least 1 of the claims challenged in the petition." For the reasons that follow, we institute an *inter partes* review as to claims 1–9 of the '687 patent on all grounds of unpatentability presented.

I. BACKGROUND

A. Real Parties-in-Interest

Petitioner identifies Genius Sports Ltd. as the real party-in-interest. Pet. 3. Patent Owner identifies SportsCastr Inc. as the real party-in-interest. Paper 4, 1.

B. Related Matters

As required by 37 C.F.R. § 42.8(b)(2), the parties identify the following related matters:

SportsCastr Inc. v. Sportradar Group, AG, 2:23-cv-00472 (E.D. Tex filed Oct. 5, 2023);

SportsCastr Inc. v. Genius Sports Ltd., No. 2:23-cv-04771 (E.D. Tex. filed Oct. 5, 2023) ("the underlying litigation");

IPR2024-01307;[1]

IPR2024-01308;

IPR2024-01309;

IPR2024-01310; and

IPR2024-01311.

Pet. 3–4; Paper 4, 1.

C. The '687 Patent

The '687 patent is titled "Systems, Apparatus, and Methods for Scalable Low-Latency Viewing of Broadcast Digital Content Streams of Live Events, and Synchronization of Event Information with Viewed Streams, via Multiple Internet Channels." Ex. 1003, code (54). The '687 patent relates to systems and methods that facilitate providing live stream video and/or audio broadcasts to viewers in real time. *Id.* at 2:57–66. Figure 1A of the '687 patent is reproduced below.

[1] Of note, Petitioner concurrently filed another petition challenging claims 19–25 and 27–30 of the '687 patent in IPR2024-01307. Pet. 3–4; Paper 3, 3. Petitioner also filed a ranking of the two petitions in which it ranked the petition in IPR2024-01307 first and the instant Petition second. Paper 3, 3. Notwithstanding, Patent Owner does not put forth any arguments seeking discretionary denial under 35 U.S.C. § 314(a) related to Petitioner's use of more than one petition against the '687 patent. Moreover, we are satisfied by Petitioner's stated reasons for filing two petitions. *See* Paper 3, 2–3.

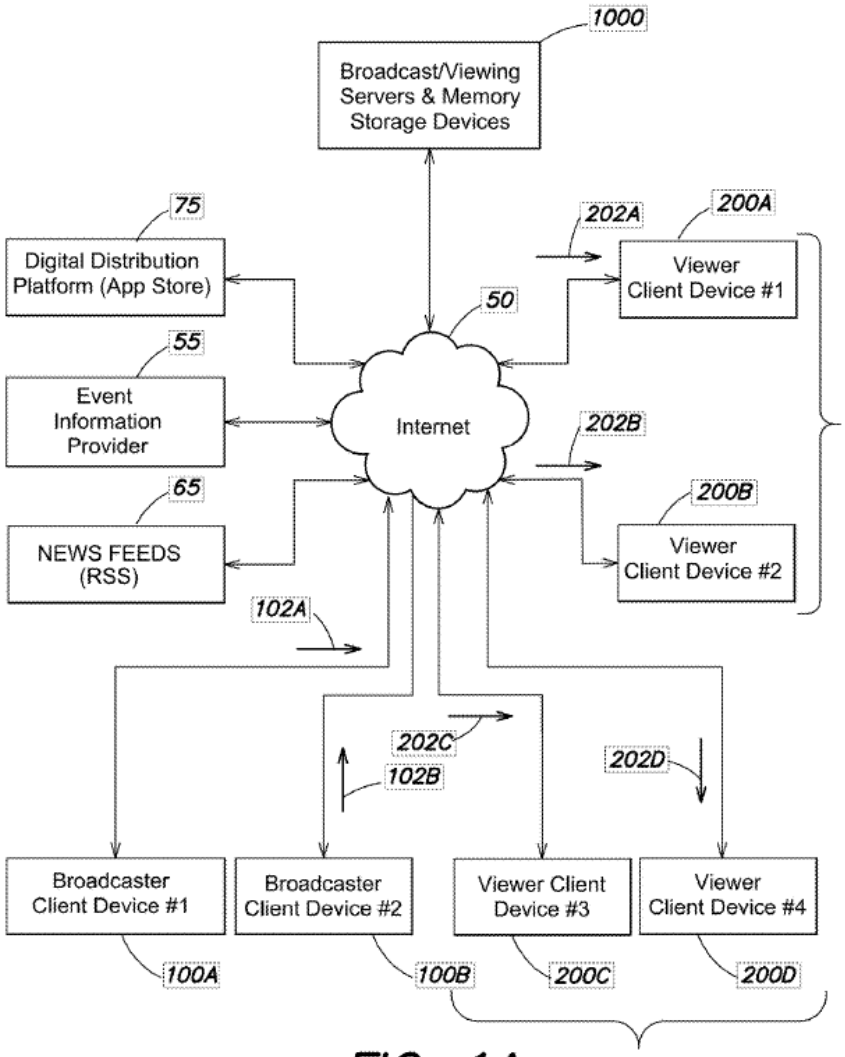

FIG. 1A

Figure 1A is a block diagram of a system facilitating live streaming digital content from multiple broadcasters to multiple viewers. *Id.* at 11:19–22. The system shown in Figure 1A includes broadcaster client devices 100A and 100B, viewer client devices 200A–200D, broadcast/viewing servers and memory storage devices 1000, event information provider 55, one or more news feeds 65, and digital distribution platform 75, all coupled together via Internet 50. *Id.* at 14:52–60. First broadcaster client device 100A provides first live stream of digital content 102A, and copies 202A and 202B of digital content 102A are received by viewer client devices 200A and 200B,

respectively. *Id.* at 15:21–28. Similarly, second broadcaster client device 100B provides second live stream of digital content 102B, and copies 202C and 202D are received by viewer client devices 200C and 200D, respectively. *Id.* at 15:28–33. Broadcast/viewing servers and memory storage devices 1000 may retrieve news and/or event information germane to a live stream of digital content from news feeds 65 and event information provider 55 and convey the relevant news and/or event information to one or more client devices. *Id.* at 15:33–40.

Figure 2 of the ’687 patent is reproduced below.

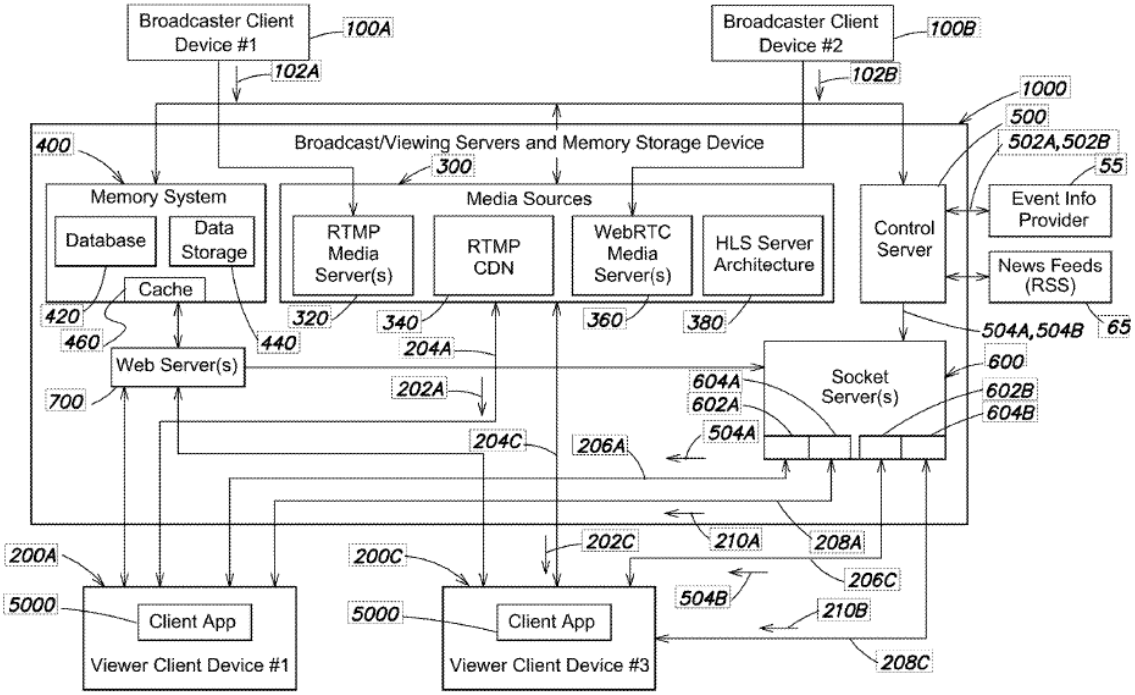

FIG. 2

Figure 2 is a block diagram of broadcast/viewing servers and memory storage devices 1000 in the system of Figure 1A. Ex. 1003, 11:26–28, 18:36–44. Servers/memory storage devices 1000 include, in relevant part, a plurality of media sources 300, control server 500, one or more web servers 700, and socket server 600. *Id.* at 18:55–62, 19:17–20:15. Media sources

300 receive live streams of digital content (102A, 102B) from broadcaster client devices (100A, 100B) and provide copies (202A, 202C) to viewer client devices (200A, 200C). *Id.* at 19:17–23. Web server 700 supports an application programming interface to facilitate communication between servers/memory storage devices 1000 and client devices. *Id.* at 18:55–62. Control server 500 retrieves news and/or event information germane to the live streams of digital content (102A, 202C) from news feeds 65 and event information provider 55. *Id.* at 19:51–55. Socket servers 600 facilitate communication of synchronized event information retrieved by control server 500 to broadcaster and viewer client devices. *Id.* at 20:10–15. For example, control server 500 may retrieve first score information 504A for a first live sporting event and provide it to socket server 600, which establishes event socket 602A. *Id.* at 21:47–62. First viewer client device 200A connects to event socket 602A via a URL, and first score information 504A is transmitted to first viewer client device 200A. *Id.* at 22:2–16.

The application that led to the ’687 patent was filed on September 24, 2019, and claims priority via continuation applications to a PCT patent application filed on August 7, 2017. Ex. 1003, codes (22), (63). The application that led to the ’687 patent also claims priority to, *inter alia*, a provisional application filed on August 5, 2016. *Id.*, code (60). Petitioner contends the asserted references “qualif[y] as prior art under 35 U.S.C. §102 regardless of whether the ’687 [patent] is entitled to its earliest provisional filing date.” Pet. 5 n.3. Accordingly, we apply the August 7, 2017, PCT patent application date (“effective filing date”) for determining whether the asserted references qualify as prior art.

D. Illustrative Claim

Of the challenged claims, claim 1 is independent. Claims 2–9 depend directly or indirectly from claim 1. Claim 1 is illustrative of the challenged claims and recites:

> 1. [1.0] A system for providing, to a first plurality of viewer client devices, a first plurality of copies of a first live stream of digital content relating to a first live sporting event, and for providing, to a second plurality of viewer client devices, a second plurality of copies of a second live stream of digital content relating to the first live sporting event or a second live sporting event, the system comprising:
>
> [1.1] A) a plurality of media sources to:
>
> [1.2] receive the first live stream of digital content and the second live stream of digital content;
>
> [1.3] provide a first copy of the first plurality of copies to a first viewer client device of the first plurality of viewer client devices via a first video Internet communication channel between the plurality of media sources and the first viewer client device of the first plurality of viewer client devices; and
>
> [1.4] provide a first copy of the second plurality of copies to a first viewer client device of the second plurality of viewer client devices via a second video Internet communication channel between the plurality of media sources and the first viewer client device of the second plurality of viewer client devices;
>
> [1.5] B) a control server to periodically retrieve, via the Internet, first event information germane to the first live sporting event; and
>
> [1.6] C) at least one socket server communicatively coupled to the control server to:
>
> [1.7] receive from the control server at least the first event information; and

> [1.8] transmit the first event information to at least the first viewer client device of the first plurality of viewer client devices via a first event information Internet communication channel between at least one first event socket of the at least one socket server and the first viewer client device of the first plurality of viewer devices, wherein the at least one first event socket corresponds to the first event information germane to the first live sporting event.

Ex. 1001, 56:46–57:16 (Petitioner's identifiers added in brackets).

E. Prior Art

Petitioner relies on the following prior art:

U.S. Patent Application Publication No. 2015/0163379 A1, filed Dec. 11, 2013, published June 11, 2015 (Ex. 1015, "Herzog");

U.S. Patent Application Publication No. 2014/0229992 A1, filed Apr. 22, 2014, published Aug. 14, 2014 (Ex. 1016, "Ellis"); and

U.S. Patent Application Publication No. 2016/0036910 A1, filed Aug. 4, 2014, published Feb. 4, 2016 (Ex. 1017, "Spivey").

F. The Asserted Grounds

Petitioner challenges claims 1–9 of the '687 patent based on the following grounds (Pet. 6):

Claims Challenged	35 U.S.C. §	References
1, 8, 9	103[2]	Ellis, Spivey

[2] The Leahy-Smith America Invents Act ("AIA"), Pub. L. No. 112-29, 125 Stat. 284, 287–88 (2011), amended 35 U.S.C. §§ 102 and 103. Because the '687 patent's earliest claim of priority is made to an application filed after

Claims Challenged	35 U.S.C. §	References
2–7	103	Ellis, Spivey, Herzog
1–9	103	Herzog, Ellis, Spivey

II. ANALYSIS

We now consider Petitioner's asserted grounds and Patent Owner's arguments to determine whether Petitioner has met the "reasonable likelihood" standard for institution under 35 U.S.C. § 314(a).

A. Legal Standards

A claim is unpatentable under 35 U.S.C. § 103 if the differences between the claimed invention and the prior art are such that the claimed invention, as a whole, would have been obvious before the effective filing date of the claimed invention to a person having ordinary skill in the art to which the claimed invention pertains. *See KSR Int'l Co. v. Teleflex Inc.*, 550 U.S. 398, 406 (2007). The question of obviousness is resolved on the basis of underlying factual determinations, including (1) the scope and content of the prior art; (2) any differences between the claimed subject matter and the prior art; (3) the level of skill in the art; and (4) where in evidence, so-called secondary considerations. *See Graham v. John Deere Co.*, 383 U.S. 1, 17–18 (1966). We also recognize that prior art references must be "considered together with the knowledge of one of ordinary skill in the pertinent art." *In re Paulsen*, 30 F.3d 1475, 1480 (Fed. Cir. 1994) (citing *In re Samour*, 571 F.2d 559, 562 (CCPA 1978)).

March 16, 2013 (the effective date of the relevant amendments), the AIA versions of §§ 102 and 103 apply. *See* Ex. 1003, codes (60), (63).

B. Level of Ordinary Skill in the Art

Citing testimony from Dr. Wicker, Petitioner contends a person of ordinary skill in the art "would have had at least a bachelor's degree, or equivalent, in electrical engineering, computer engineering, computer science, or a related field or an equivalent number of years of working experience, and one to two years of experience in networking environments, including at least some experience with live-streaming network architecture." Pet. 13 (citing Ex. 1001 ¶¶ 72–76). Patent Owner cites testimony from Dr. Rubin and contends that an ordinarily skilled artisan "would have [had] a bachelor's degree in electrical engineering, computer engineering, computer science, or equivalent degree and, in addition, approximately two years of work experience with Internet video streaming, Internet communication, and related protocols." Prelim. Resp. 8 (citing Ex. 2001 ¶ 99).

The differences between the parties' definitions are minor, as recognized by Dr. Rubin (*see* Ex. 2001 ¶ 101), and we do not discern any meaningful differences based on the preliminary record. Accordingly, for purposes of this Decision, we adopt Patent Owner's definition of the level of ordinary skill in the art. On the present record, we are satisfied that this definition of the level of skill is consistent with the teachings of the '687 patent and the asserted prior art. Notwithstanding, we would reach the same determination under Petitioner's formulation of the level of skill.

C. Claim Interpretation

In an *inter partes* review, we construe each claim

> using the same claim construction standard that would be used to construe the claim in a civil action under 35 U.S.C.

> [§] 282(b), including construing the claim in accordance with the ordinary and customary meaning of such claim as understood by one of ordinary skill in the art and the prosecution history pertaining to the patent.

37 C.F.R. § 42.100(b). Accordingly, our claim construction standard is the same as that of a district court. *See id.* Under the standard applied by district courts, claim terms are generally given their plain and ordinary meaning, as would have been understood by a person of ordinary skill in the art at the time of the invention and in the context of the entire patent disclosure. *Phillips v. AWH Corp.*, 415 F.3d 1303, 1313 (Fed. Cir. 2005) (en banc). "There are only two exceptions to this general rule: 1) when a patentee sets out a definition and acts as his own lexicographer, or 2) when the patentee disavows the full scope of a claim term either in the specification or during prosecution." *Thorner v. Sony Comput. Entm't Am. LLC*, 669 F.3d 1362, 1365 (Fed. Cir. 2012).

Petitioner contends that all claim terms should be given their plain and ordinary meaning. Pet. 6. Petitioner also argues that an ordinarily skilled artisan would have known that a "socket" is "a uniquely addressable communication endpoint on a server where first event information is provided to a VCD [viewer client device]." *Id.* at 37 (citing Ex. 1001 ¶ 352). Thus, Petitioner argues that an "event socket" is "a socket where information about one sporting event is provided to a VCD." *Id.* Patent Owner states that "[e]xcept for the 'event socket' term for which Patent Owner applies Petitioner's construction . . . for purposes of [its] preliminary response, Patent Owner agrees that no terms require construction and construes all other terms consistent with their plain and ordinary meaning." Prelim. Resp. 8.

For purposes of this Decision, we apply Petitioner's construction of "socket" and "event socket." We determine that no other aspects of the challenged claims require explicit construction. *See, e.g.*, *Realtime Data, LLC v. Iancu*, 912 F.3d 1368, 1375 (Fed. Cir. 2019) ("The Board is required to construe 'only those terms . . . that are in controversy, and only to the extent necessary to resolve the controversy.'" (quoting *Vivid Techs., Inc. v. Am. Sci. & Eng'g, Inc.*, 200 F.3d 795, 803 (Fed. Cir. 1999))).

D. Obviousness Ground Based on Ellis and Spivey

Petitioner contends that claims 1, 8, and 9 would have been obvious over the combination of Ellis and Spivey. Pet. 17–52. Patent Owner disputes Petitioner's contentions. Prelim. Resp. 21–45, 61–71.

1. Ellis

Ellis is a U.S. patent application publication titled "Systems and Methods for Providing Enhanced Sports Watching Media Guidance" that discloses systems and methods for accessing and displaying enhanced sports-related media content. Ex. 1016, codes (54), (57). Figure 1 of Ellis is reproduced below.

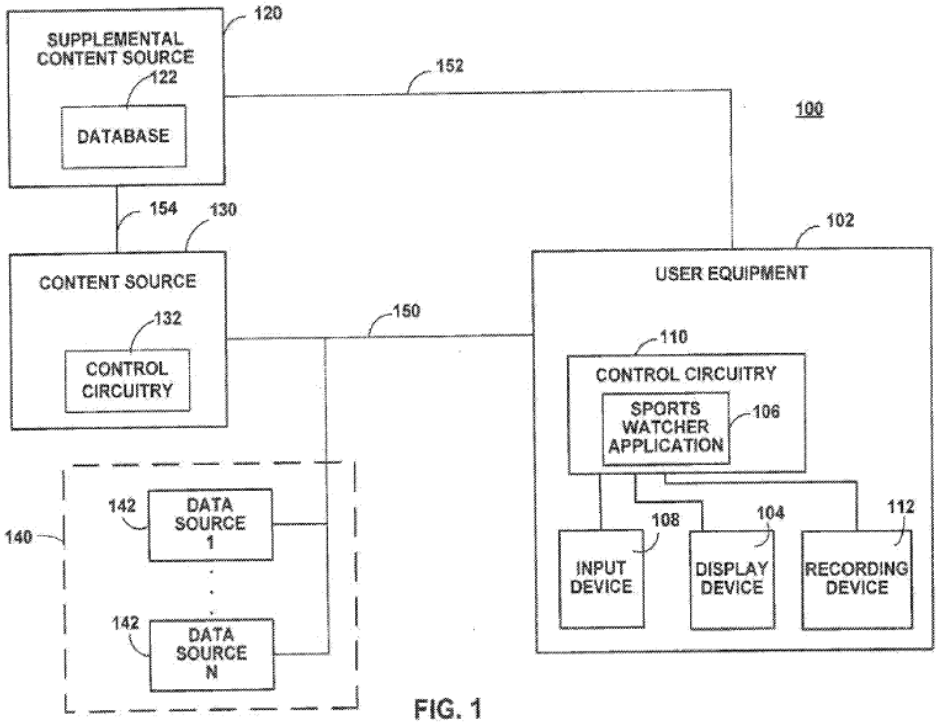

FIG. 1

Figure 1 is a block diagram illustrating interactive media system 100. *Id.* ¶¶ 15, 39. Interactive media system 100 including user equipment 102, content source 130, supplemental content source 120, and data sources 140. *Id.* ¶ 39. User equipment device 102 receives media content, such as video broadcast programming, from content source 130 via communication path 150. *Id.* ¶¶ 39–40, Fig. 1. User equipment device 102 also receives content, such as real-time sports scores and game summary information, from supplemental content source 120 via communication path 152. *Id.* ¶¶ 39, 41, Fig. 1. Data sources 140 provide data for applications running on user equipment 102. *Id.* ¶ 46.

Petitioner notes that Ellis was published on August 14, 2014, and contends that Ellis qualifies as prior art under 35 U.S.C. § 102(a). Pet. 5. Patent Owner does not dispute the prior art status of Ellis at this juncture. For purposes of this Decision, we determine that Ellis qualifies as prior art

under 35 U.S.C. § 102(a) because Ellis's publication date of August 14, 2014, is before the effective filing date of the challenged claims, which is August 7, 2017. Ex. 1003, code (63); Ex. 1016, code (43).

2. Spivey

Spivey is a U.S. patent application publication titled "Techniques to Broadcast Live Event Data in Real-Time" that discloses a system for broadcasting live event data in real-time. Ex. 1017, codes (54), (57). According to Spivey, its techniques "increase the speed at which live event data (e.g. sports scores and breaking news), are broadcast to mobile devices by using topic queues and open duplex communication connections, among other innovative techniques." *Id.* ¶ 27. Figure 1 of Spivey is reproduced below.

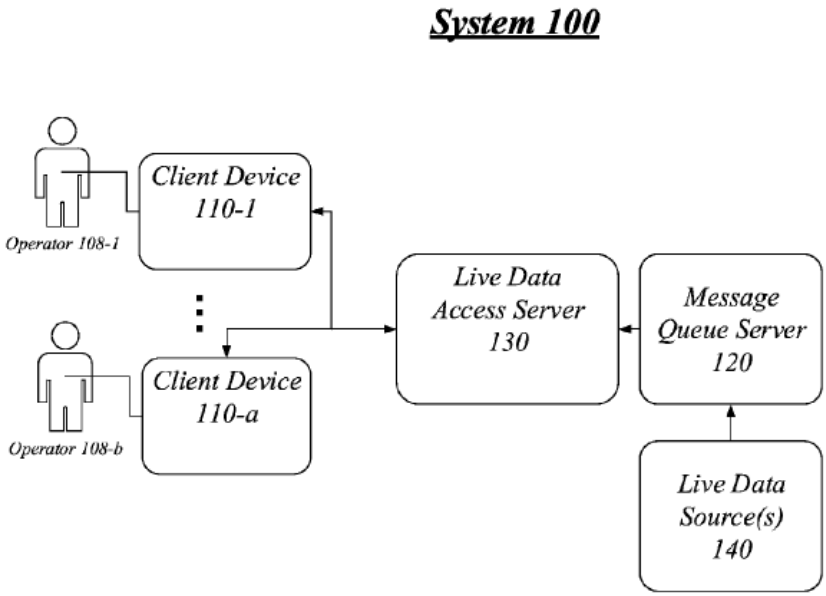

FIG. 1

Figure 1 shows system 100 for broadcasting live event data including client devices 110-1 through 110-a, message queue server 120, and live data access

server 130 coupled via one or more networks. *Id.* ¶¶ 3, 34. Message queue server 120 receives live data from live data source(s) 140 and processes the live data so that it can be provided to client devices 110-1 through 110-a. *Id.* ¶¶ 35–37. Live data access server 130 interfaces between message queue server 120 and client devices 110-1 and 110-a. *Id.* ¶ 38.

Figure 4 of Spivey is reproduced below.

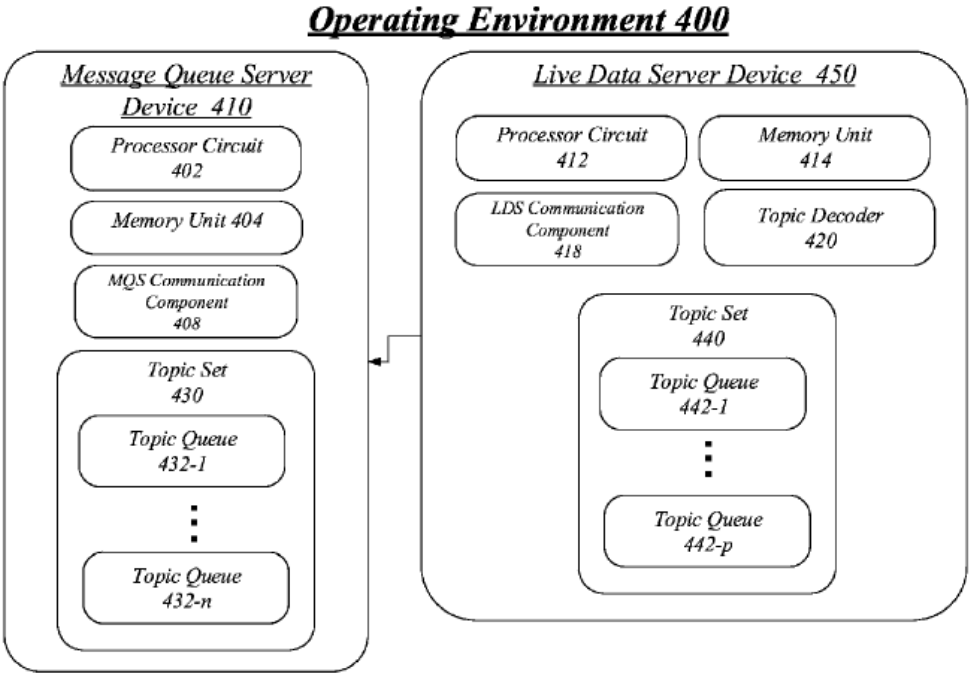

FIG. 4

Figure 4 shows operating environment 400, in which message queue server 120 is implemented as message queue server device 410 and live data server device 450. Ex. 1017 ¶¶ 6, 53. Message queue server device 410 includes communication component 408, topic set 430, and topic queues 432. *Id.* ¶ 54. Live data server device 450 includes live data server communication component 418 that allows live data server device 450 to receive live data and transmit it to message queue server device 410. *Id.* ¶ 55. Live data server device 450 also includes topic decoder 420, topic set 440, and topic queues 442. *Id.* ¶ 56.

Petitioner notes that Spivey was published on February 4, 2016, and contends that Spivey qualifies as prior art under 35 U.S.C. § 102(a). Pet. 6. Patent Owner does not dispute the prior art status of Spivey at this juncture. For purposes of this Decision, we determine that Spivey qualifies as prior art under 35 U.S.C. § 102(a) because Spivey's publication date of February 4, 2016, is before the effective filing date of the challenged claims, which is August 7, 2017. Ex. 1003, code (63); Ex. 1017, code (43).

3. Claim 1

a. Rationale for the Combination

Petitioner notes Spivey's teaching that "some live-event data delivery systems, such as Ellis's, suffer from latency issues." Pet. 18 (citing Ex. 1001 ¶¶ 107–108); *see also* Ex. 1001 ¶¶ 95, 107 (citing Ex. 1017 ¶¶ 27–28) (discussing Spivey's disclosures about the problem of latency for live event data). Petitioner further notes Spivey's teaching that a live data server device (LDSD) and message queue server device (MQSD) "could provide live-event data to any number of customers in milliseconds." Pet. 18 (citing Ex. 1001 ¶ 109; Ex. 1017 ¶¶ 27–28). Thus, Petitioner contends that an ordinarily skilled artisan "would have implemented Spivey into Ellis's current data delivery system by replacing Ellis's SCS with Spivey's LDSD and adding the MQSD to achieve a predictable result of decreased latency data delivery using a websocket connection in lieu of HTTPS." Pet. 19 (citing Ex. 1001 ¶¶ 109–111; Ex. 1016 ¶¶ 39, 41, Fig. 1; Ex. 1017, Fig. 4).

Petitioner provides the following illustration of its conception of the combined system.

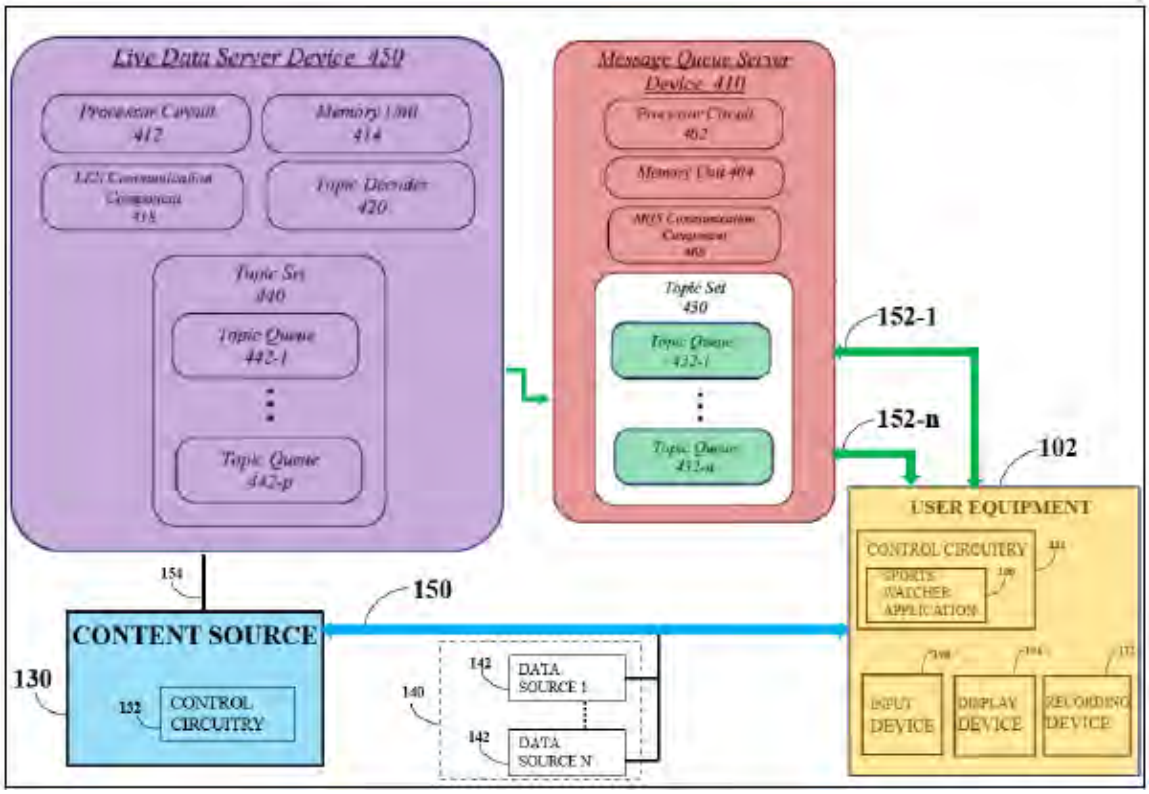

Pet. 19–20. In this illustration from the Petition, Petitioner has modified Ellis's Figure 1 such that Spivey's live data server device 450 and message queue server device 410 from Spivey's Figure 4 replace supplemental content source 120 in Ellis's Figure 1. *Id.* (citing Ex. 1001 ¶ 111; Ex. 1016, Fig. 1; Ex. 1017, Fig. 4). According to Petitioner, the modification "would maintain Ellis's video content delivery system and upgrade the data delivery system to reduce latency." *Id.* at 20 (citing Ex. 1001 ¶ 111).

Petitioner contends an ordinarily skilled artisan would have combined Ellis and Spivey because they both are related to "content delivery for real-time events" and both "solve the same or similar problems, namely, quickly providing video and/or event data to multiple users over the Internet." Pet. 20 (citing Ex. 1001 ¶¶ 112–114; Ex. 1016 ¶¶ 39–40, 156, 176; Ex. 1017,

code (57), ¶ 27). Petitioner further contends that Spivey complements Ellis insofar as Spivey provides "details of the backend architecture for transmitting event data to multiple users." *Id.* at 21 (citing Ex. 1001 ¶ 115; Ex. 1017, code (57)). Petitioner additionally contends that "[i]mplementing certain portions of Spivey's system into Ellis's system would have been obvious because doing so would have required only the simple substitution of known elements for another to obtain predictable results." *Id.* (citing Ex. 1001 ¶ 114).

Patent Owner argues that Petitioner's proposed combination is inoperable because it removes Ellis's source of the supplemental content data (i.e., supplemental content source 120 and database 122) and "thereby eliminates the very functionality—data delivery—Petitioner proposes to upgrade." Prelim. Resp. 24 (citing Ex. 1016 ¶¶ 41–43; Ex. 2001 ¶¶ 191–193). Patent Owner also argues that Petitioner's proposed combination is inoperable because Spivey "fails to address video delivery" and "how immediately pushed data could somehow be throttled or gated in a manner to synchronize with any associated television programming." *Id.* at 23 (citing Ex. 2001 ¶¶ 197–198).

In addition, Patent Owner disputes Petitioner's rationale for combining Spivey with Ellis. Specifically, Patent Owner argues that "Petitioner manufactures a data latency problem in Ellis, without any explanation as to why a[n ordinarily skilled artisan] would understand one to exist." Prelim. Resp. 26 (citing Ex. 2001 ¶ 211). Patent Owner also criticizes Petitioner's rationale as cursory to the extent it is based on Ellis's and Spivey's alleged common teachings of "content delivery for real time events." *Id.* at 27 (citing Pet. 20). Further, contrary to Petitioner's

assertions, Patent Owner also disputes that Ellis and Spivey solve the similar problem of "quickly providing video and/or event data to multiple users over the Internet." *Id.* (citing Pet. 20). Patent Owner further disputes that Ellis and Spivey "disclose complementary means of achieving the common goal of synchronizing multiple forms of data, including video/audio and event data." Prelim. Resp. 28 (citing Pet. 20). Patent Owner additionally argues that the fact that Spivey might provide a complementary solution for Ellis's backend architecture would not have been obvious unless the results are predictable, and Petitioner has not established as much. *Id.* at 29–30. Patent Owner further argues that an ordinarily skilled artisan would not have had a reasonable expectation of success because of "the fundamental incompatibility of Spivey's immediate 'push' data delivery and Ellis's video delivery," which allegedly "would have decreased performance." *Id.* at 30 (citing Ex. 2001 ¶¶ 197–199).

Patent Owner also argues that Petitioner has engaged in impermissible hindsight when combining Spivey with Ellis. Prelim. Resp. 30–34. In particular, Patent Owner argues that, "absent reference to the blueprint of claim 1 of the '687 patent," an ordinarily skilled artisan "would not have been prompted to remove both of Ellis's supplemental content *source* and *database* and replace those components with a multi-component messaging architecture cherry-picked from an alternative embodiment of Spivey." *Id.* at 31 (citing Ex. 2001 ¶¶ 210–213). Patent Owner also argues that Ellis at most teaches synchronization of broadcast and other event information to a single viewer, whereas the '687 patent is directed to synchronization across multiple client devices. *Id.* at 33–34 (citing Ex. 1016 ¶ 70). As such, Patent Owner argues an ordinarily skilled artisan "would not [have] attempt[ed] to

implement Spivey's messaging queue architecture in Ellis" without engaging in hindsight. *Id.* at 33 (citing Ex. 2001 ¶¶ 217–219).

For the reasons given below, we find that Petitioner's arguments are supported sufficiently by the evidence in the preliminary record before us at this early juncture, and that Patent Owner's arguments do not undermine Petitioner's showing. For example, we are persuaded preliminarily that Petitioner's proposed combination would have improved latency issues in Ellis's system. *See* Pet. 17–21; Ex. 1001 ¶¶ 106–115. This is supported by Spivey's disclosure that its techniques "may reduce . . . delay [on the order of seconds (e.g., 30 to 45 seconds) or minutes] to an order of milliseconds (ms) (e.g., 100 ms) or less, providing a significant advantage over the conventional practices." Ex. 1017 ¶ 28. Spivey also discloses pushing data "to the subscribed connected client devices substantially simultaneously with the message queue server receiving the topic entry from a live data source, e.g., with a time delay of 100 milliseconds or less," which Spivey discloses is "at least two orders of magnitude shorter than conventional time periods of legacy devices." *Id.* ¶ 96; *see also id.* at code (57) (disclosing pushing "the topic entry to a subscribed client device substantially simultaneously with the message queue server receiving the topic entry from a live data source").

We disagree with Patent Owner (Prelim. Resp. 26) that "Petitioner manufactures a data latency problem in Ellis, without any explanation as to why a[n ordinarily skilled artisan] would understand one to exist." The portion of Spivey cited by Petitioner describes that its techniques reduce latency, thus "providing a significant advantage over the conventional practices." Ex. 1017 ¶ 28; *see also id.* ¶ 96 (describing improvements of "at

least two orders of magnitude" as compared to "conventional time periods of legacy devices"). This teaching shows sufficiently, for purposes of institution, that artisans in the field would have known to consider the problem of latency in delivering live data. Moreover, Patent Owner's argument that Ellis pertains to "viewing and tuning" and Spivey is not relevant to "how sports viewers commonly watch and interact with displayed sporting events" (Prelim. Resp. 26–28), as well as Dr. Rubin's related testimony (Ex. 2001 ¶¶ 171, 190, 215–216), are based on only a subset of the teachings of both references, rather than the teachings of the references in their entirety. For example, Ellis describes providing real-time data such as sports scores (*see, e.g.*, Ex. 1016 ¶ 41), and Spivey describes that its live data feeds are generated by computing devices associated with a live event (Ex. 1017 ¶ 37). We are mindful that the teachings of the references must be considered as a whole, from the perspective of an ordinarily skilled artisan. *See Sundance, Inc. v. DeMonte Fabricating Ltd.*, 550 F.3d 1356, 1361 n.3 (Fed. Cir. 2008) ("What a prior art reference discloses or teaches is determined from the perspective of one of ordinary skill in the art."); *In re Hedges*, 783 F.2d 1038, 1041 (Fed. Cir. 1986) (noting that when evaluating claims for obviousness, "the prior art as a whole must be considered").

Furthermore, Ellis and Spivey are complementary insofar as they both are directed to content delivery for real-time events to multiple users. *See, e.g.*, Ex. 1016, code (57) (describing "[s]ystems and methods for enhanced sports-related media content access and display"), ¶ 39 (describing that in system 100 "[u]ser equipment device 102 receives content . . . from content source 120 and/or supplemental content source 120 over communications

paths 150 and 152, respectively" and "[a]ny suitable number of users may have one or more user equipment devices, such as user equipment 102"), ¶ 40 (describing that "[c]ontent source 130 may be any suitable source of media content" such as the "Internet or network media/web server" and that "[m]edia content" includes "broadcast programming," "news," "newsgroups," and "chat rooms"), ¶ 41 (describing that "[s]upplemental content source 132 may be any suitable content source configured to provide real-time sports scores and game summary information . . . [and] sports commentary" as well as other "sports-related information" via "a plurality of real-time data feeds"); Ex. 1017, code (57) (describing "[a]n apparatus to broadcast live event data in real-time" that receives "a topic entry from a message queue server" and pushes "the topic entry to a subscribed client device substantially simultaneously with the message queue server receiving the topic entry from the live data source"), ¶ 27 (describing techniques for broadcasting "media content in real-time" and that the "media content may comprise, for example, data from a live event (e.g., news event, a gaming event, sporting event, etc.)" and that "live event data (e.g., sports scores and breaking news)" also is broadcasted), ¶ 34 (describing "system 100 for broadcasting live data in real-time" that includes "client devices 110-1 through 110-a"). Ellis and Spivey also both disclose that content is provided over the internet. For instance, Ellis describes that "[c]ontent source 130 and supplemental content source 120 may be configured to transmit signals to user equipment 102 over any suitable communication paths 150 and 152" (Ex. 1016 ¶ 45) and that, in certain embodiments, content is delivered "on a particular network address (e.g., multicast address) on which an IP socket is currently joined." Ex. 1016 ¶¶ 45, 74. Spivey additionally describes "[a]n

apparatus to broadcast live event data in real-time" that receives "a topic entry from a message queue server" and pushes "the topic entry to a subscribed client device substantially simultaneously with the message queue server receiving the topic entry from the live data source" and that the subscribed client device receives data over "a websocket connection." Ex. 1017, code (57), ¶¶ 43, 61, 74, 92. Based on the present record, these teachings appear to contradict Patent Owner's assertions (Prelim. Resp. 25–30) that the references are not complementary, or else that Petitioner did not adequately address differences between the references.

We also disagree with Patent Owner's argument (Prelim. Resp. 24–25) that Petitioner's proposed combination is inoperable because Petitioner's proposed combination removes the source of supplemental content, Ellis's database 122, and replaces it with "a database-less system of Spivey." In particular, Ellis describes database 122 as being optional: "sports-related information *may be* stored in database 122." Ex. 1016, Fig. 1, ¶ 42 (emphasis added). Thus, even if Petitioner's proposed combination lacked a database, we do not understand this to be a fatal flaw in the manner suggested by Patent Owner. Further, we note that Spivey discloses "data feeds" that are "generated by computing devices associated with a live event" and "data gathered by human observers of a live event and entered into an interface that communicates the gathered data." Ex. 1017 ¶ 37. Spivey also describes "broadcasting live data in real-time" (*id.* ¶ 34) and receiving "live data in the form of a topic entry," which may include "a score, a play, an error, an injury, a player-at-bat" when "the live event is a sporting event" (*id.* ¶¶ 47–48). These teachings from Spivey support that an

ordinarily skilled artisan would have known how to provide data to Petitioner's proposed system.

We further disagree with Patent Owner (Prelim. Resp. 23–24) that the proposed combination is inoperable because Spivey's teachings "are not tied to video delivery" and Petitioner does not address "how immediately pushed data could somehow be throttled or gated in a manner to synchronize with any associated television programming." Patent Owner's argument (*id.*) and Dr. Rubin's related testimony (Ex. 2001 ¶¶ 167–168, 197–198, 208) are not consistent with evidence that Spivey describes its teachings as associated with broadcasting a live event. For example, Spivey's system 100 broadcasts "live event data in real-time" and includes "a subscription component . . . to receive a topic entry from a message queue server, and to push the topic entry to a subscribed client device." Ex. 1017, code (57). Spivey also describes that its live data sources are "associated with a live event." *Id.* ¶ 37; *see also id.* ¶ 48 (describing that the topic entry "may include any media information about at least one of a live event (e.g., news, game, sport, activity, and so forth"). Additionally, the challenged claims do not recite that the first event information must be gated or synchronized with the first live sporting event, so this argument is not commensurate with the scope of the challenged claims.

Patent Owner's remaining arguments that Petitioner relies on impermissible hindsight bias to "reconstruct the invention" from "cherry-picked" prior art teachings (Prelim. Resp. 30–34) and Dr. Rubin's related testimony (Ex. 2001 ¶¶ 168–171, 210–213, 217–219) are premised on many of the same arguments we find unavailing at this stage. As discussed above, Petitioner's argument that its proposed combination would have been made

to improve latency issues in Ellis's system (Pet. 17–21) is supported by Spivey's disclosures. Spivey describes, for example, that "the data payload of the topic entry may be pushed to the subscribed connected client devices substantially simultaneously with the message queue server receiving the topic entry from a live data source, e.g., with a time delay of 100 milliseconds or less." Ex. 1017 ¶ 96. As shown in Figure 1 of Spivey, live data source(s) 140 is connected to client devices 110-1 through 110-a via message queue server 120 and live data access server 130. *Id.* at Fig. 1. Spivey describes that Figure 4 illustrates an embodiment of message queue server 120. *Id.* ¶ 53. Thus, based on the preliminary record, we find that Petitioner's proposed substitution of message queue server device 410 and live data server device 450 into Ellis is consistent with Petitioner's rationale to combine the teachings of Ellis and Spivey, which is to reduce latency.

Finally, for reasons similar to those mentioned above, we disagree with Patent Owner (Prelim. Resp. 21, 24, 26, 28, 30) that Petitioner fails to establish that an ordinarily skilled artisan reasonably would have expected success when combining Spivey with Ellis. We are persuaded preliminarily that the use of a websocket connection in Petitioner's combination predictably would have resulted in decreased latency. *See, e.g.*, Ex. 1001 ¶¶ 109–111. Petitioner also has shown sufficiently, for purposes of institution, that the combination represents the substitution of known elements for one another (i.e., substituting "Spivey's LDSD and MQSD" for "portions of Ellis's SCS"), which would yield predictable results. *See, e.g.*, *id.* ¶¶ 114–115.

Based on the preliminary record, we find that Petitioner provides a sufficient rationale for combining the teachings of Ellis and Spivey. We also

find that Petitioner has shown sufficiently for purposes of institution that a person of ordinary skill in the art would have had a reasonable expectation of success.

b. Preamble 1.0

The preamble of claim 1 recites

> [a] system for providing, to a first plurality of viewer client devices, a first plurality of copies of a first live stream of digital content relating to a first live sporting event, and for providing, to a second plurality of viewer client devices, a second plurality of copies of a second live stream of digital content relating to the first live sporting event or a second live sporting event.

Ex. 1003, 56:46–52. Petitioner cites Ellis's system for providing "enhanced information access and viewing functionality for sports-related programming" including "a sporting event, sports news, or sports commentary." Pet. 22 (citing Ex. 1016 ¶¶ 8, 11). Petitioner notes that Ellis's system provides individual copies of live broadcast programming at the same time to multiple users. *Id.* at 22–23 (citing Ex. 1016 ¶¶ 39, 40, 45, 62–63, Fig. 2B).

Patent Owner does not dispute Petitioner's analysis of the preamble at this time. Based on the present record, we are persuaded preliminarily that Ellis teaches the preamble.[3] *See, e.g.*, Ex. 1016 ¶¶ 8, 11, 39, 40, 45, 62–63, Fig. 2B.

[3] Because Petitioner shows sufficiently for purposes of institution that Ellis teaches the preamble, we need not determine whether the preamble is limiting. *See Realtime Data*, 912 F.3d at 1375.

c. Limitation 1.1

Claim 1 further recites "A) a plurality of media sources to" perform various steps. Ex. 1003, 56:53. Petitioner cites Ellis's teaching of "any suitable source of media content" such as an "Internet or network media/web server, or any other suitable facility or system for originating or distributing passive or interactive content to user equipment." Pet. 24 (citing Ex. 1016 ¶ 40). Petitioner further Ellis's teaching of numerous instances of content source 130 distributing video content to users over communication path 150. *Id.* at 24–25 (citing Ex. 1016 ¶¶ 39–41, Fig. 1).

At this juncture, Patent Owner does not dispute Petitioner's analysis of this limitation. Based on the present record, Petitioner has shown sufficiently that Ellis teaches a plurality of different sources of media content. *See, e.g.*, Ex. 1016 ¶¶ 39–41, Fig. 1.

d. Limitation 1.2

Claim 1 further recites that the plurality of media sources "receive the first live stream of digital content and the second live stream of digital content." Ex. 1001, 56:54–55. Petitioner again cites Ellis's teaching of using multiple streams of media content, including those from television broadcasts and media servers, and of allowing a user to watch more than one event. Pet. 25–26 (citing Ex. 1016 ¶¶ 40, 45, 61–62, 74).

At this juncture, Patent Owner does not dispute Petitioner's analysis. Based on the present record, we are persuaded preliminarily that Ellis teaches this limitation. *See, e.g.*, Ex. 1016 ¶¶ 40, 45, 61–62, 74.

e. Limitations 1.3 and 1.4

Claim 1 further recites that the plurality of media sources

> provide a first copy of the first plurality of copies to a first viewer client device of the first plurality of viewer client devices via a first video Internet communication channel between the plurality of media sources and the first viewer client device of the first plurality of viewer client devices; and
>
> provide a first copy of the second plurality of copies to a first viewer client device of the second plurality of viewer client devices via a second video Internet communication channel between the plurality of media sources and the first viewer client device of the second plurality of viewer client devices

Ex. 1003, 56:56–67. For the viewer client devices, Petitioner cites Ellis's teaching of an "'interactive media system' where 'any suitable number of users' may 'select any game from the listing' of 'available games' to 'watch the selected game.'" Pet. 26 (citing Ex. 1016 ¶¶ 39, 94). Petitioner notes that this may result in different groups of users watching different content. *Id.* (citing Ex. 1001 ¶ 340; Ex. 1016 ¶¶ 55, 61–62, 132, Fig. 2B). Petitioner also cites Ellis's teaching of an internet server providing a stream over any "suitable wired or wireless path," such as the internet. *Id.* at 27 (citing Ex. 1016 ¶¶ 39, 45). According to Petitioner, each user would receive an individual copy of the live stream of digital content over a unique internet connection between the content source and the user equipment. *Id.* at 27–28 (citing Ex. 1001 ¶¶ 342–343; Ex. 1016 ¶ 74).

At this juncture, Patent Owner does not dispute Petitioner's analysis. Based on the present record, we are persuaded preliminarily that Ellis teaches these limitations. *See, e.g.*, Ex. 1016 ¶¶ 39, 40, 45, 48, 55, 61, 62, 74, 94, 132, Fig. 2B.

f. Limitation 1.5

Claim 1 further recites "B) a control server to periodically retrieve, via the Internet, first event information germane to the first live sporting event." Ex. 1003, 57:1–3. For the "control server," Petitioner cites Ellis's supplemental content source, which "comprises one or more processors, memory devices, and communication interfaces." Pet. 28 (citing Ex. 1001 ¶ 345). Petitioner contends that the supplemental content source periodically retrieves "real-time sports scores and game summary information, . . . spread and wagering data, and any other sports-related information" because it provides this information to user equipment. *Id.* at 28–29 (quoting Ex. 1016 ¶ 41) (citing Ex. 1001 ¶ 345; Ex. 1016 ¶¶ 72, 117). Petitioner also contends that an ordinarily skilled artisan would have known that "this information is retrieved via the internet because that is how real-time data was transferred to users at the time of Ellis and Spivey—including score updates and wagering information." *Id.* at 29 (citing Ex. 1001 ¶ 345; Ex. 1016 ¶¶ 42, 142).

Petitioner further argues that, to the extent Ellis does not teach limitation 1.5, Spivey's live data server device (LDSD) teaches the recited "control server." Pet. 30–31 (citing Ex. 1017, Fig. 4). Petitioner contends that Spivey's LDSD "is a generic server comprising one or more processors, memory devices, and communication interfaces." *Id.* at 31 (citing Ex. 1001 ¶ 346; Ex. 1017, Fig. 4). According to Petitioner, "[t]he LDSD contains an LDS communication component that allows LDSD to receive live data and transmit the data payloads to MQS device 410" and the received data includes "sports scores and breaking news." *Id.* (internal quotation omitted) (citing Ex. 1017 ¶¶ 27, 48, 55, 66).

At this juncture, Patent Owner does not dispute Petitioner's analysis. We note that Petitioner's proposed combination does not incorporate Ellis's supplemental content source and, instead, replaces Ellis's supplemental content source with Spivey's live data server database and message queue server device. *See* Pet. 19–20. Thus, at this preliminary stage, we are not persuaded by Petitioner's contentions regarding Ellis's supplemental content source for teaching limitation 1.5 because, based on the current record, Petitioner has not shown sufficiently how Ellis's supplemental content source would be part of Petitioner's proposed combination. Notwithstanding, we are persuaded preliminarily that Spivey's live data server device teaches limitation 1.5. *See, e.g.*, Ex. 1017 ¶¶ 27, 48, 55, 66, Fig. 4.

g. Limitation 1.6

Claim 1 further recites "C) at least one socket server communicatively coupled to the control server." Ex. 1003, 57:4–5. Petitioner cites Spivey's message queue server device (MQSD) for teaching the recited "socket server." *See* Pet. 33–35. Petitioner contends Spivey's MQSD "is a generic server that contains processors, memory, and communication components" that "'receive[s]' and 'process[es] live data to provide live data' to 'the subscribed connected client devices substantially simultaneously.'" *Id.* at 33 (quoting Ex. 1017 ¶¶ 36, 96) (citing Ex. 1017 ¶¶ 35, 45, 53, 54, 165, Figs. 3, 4). Petitioner further contends that Spivey's MQSD is communicatively coupled to the LDSD (i.e., the "control server") through Spivey's MQS communication component and LDS communication component. *Id.* at 34 (citing Ex. 1017 ¶¶ 46, 54–55). Thus, according to Petitioner, Spivey's

MQSD receives live event data from the LDSD, which just "receive[d] live data." *Id.* at 33–34 (quoting Ex. 1017 ¶ 55) (citing Ex. 1017 ¶ 54, Fig. 4).

At this juncture, Patent Owner does not specifically dispute Petitioner's analysis for limitation 1.6.[4] Based on the present record, Petitioner has shown sufficiently that Spivey's MQSD teaches the recited "socket server." *See, e.g.*, Ex. 1017 ¶¶ 35–36, 45, 53, 54, 96, 165, Figs. 3, 4.

h. Limitation 1.7

Claim 1 further recites that that the socket server "receive[s] from the control server at least the first event information." Ex. 1003, 57:6–7. Continuing the same analysis from above, Petitioner contends that Spivey's LDSD (i.e., the "control server") "receive[s] live data and transmit[s] the data payloads" to the MQSD (i.e., the "socket server"). Pet. 35 (citing Ex. 1017 ¶ 55). Petitioner further cites Spivey's teaching that data payloads may include "a score, a player name, a play, and so forth." *Id.* at 35–36 (quoting Ex. 1017 ¶ 117) (citing Ex. 1017, Fig. 10).

At this juncture, Patent Owner does not specifically dispute Petitioner's analysis for limitation 1.7.[5] Based on the present record, Petitioner has shown sufficiently that Spivey's MQSD (i.e., the "socket server") receives live event data (e.g., scores, player names) from the LDSD (i.e., the "control server"). *See, e.g.*, Ex. 1017 ¶¶ 55, 117.

---

[4] We note that Patent Owner disputes Petitioner's analysis of a related claim term, i.e., "event socket," for limitation 1.8. We discuss those arguments below. *See infra* § II.D.3.i.

[5] We note that Patent Owner disputes Petitioner's analysis of a related claim term, i.e., "event socket," for limitation 1.8. We discuss those arguments below. *See infra* § II.D.3.i.

i. Limitation 1.8

Claim 1 further recites that the socket server

> transmit[s] the first event information to at least the first viewer client device of the first plurality of viewer client devices via a first event information Internet communication channel between at least one first event socket of the at least one socket server and the first viewer client device of the first plurality of viewer devices, wherein the at least one first event socket corresponds to the first event information germane to the first live sporting event.

Ex. 1003, 57:8–16. Petitioner contends that an ordinarily skilled artisan "would have understood a 'socket' to be a uniquely addressable communication endpoint on a server where first event information is provided to a VCD [viewer client device]." Pet. 37 (citing Ex. 1001 ¶ 352). Petitioner interprets "at least one first event socket correspond[ing] to the first event information germane to the first live sporting event" as "a socket where information about one sporting event is provided to a VCD." *Id.* Thus, Petitioner maps the "event socket correspond[ing] to the first event information germane to the first live sporting event" to Spivey's topic queues in the LDSD "where data payloads are placed." Pet. 37 (quoting Ex. 1017 ¶¶ 51–52). Petitioner notes that each topic queue has a corresponding "topic label" (e.g., "gamecenter.nfl.ravenssteelers"), which identifies a topic queue and is used by a client device "to connect and subscribe to MQSD's topic queues." *See* Pet. 37–39 (citing Ex. 1017 ¶¶ 49, 66, 81–84, 96, Fig. 9).

As part of that analysis, Petitioner contends that "client devices 'request a live data connection' with the MQSD by 'select[ing] or enter[ing] the address or connection information to a particular' MQSD." Pet. 37 (quoting Ex. 1017 ¶¶ 81–82). Petitioner acknowledges that Spivey actually

mentions "a connection between the client device and the system using a live data access server ('LDAS')" rather than the MQSD, but Petitioner cites certain passages from Spivey and Dr. Wicker's testimony in support of its contention that Spivey's "message queue server device may be 'accessible to clients over the network directly.'" *Id.* at 37 n.6 (citing Ex. 1001 ¶ 354; Ex. 1017 ¶¶ 36, 38, 46, 84). Petitioner contends an ordinarily skilled artisan would have omitted the live data access server to "reduce latency, which is Spivey's main purpose." *Id.*

For "transmit[ting] the first event information to at least the first viewer client device of the first plurality of viewer client devices," Petitioner cites Spivey's teaching that the MQSD "may push data from topic queues . . . to the subscribers of the topics corresponding to those topic queues." Pet. 39 (quoting Ex. 1017 ¶ 46). Petitioner also cites Ellis's teaching that the supplemental content source may be configured "to provide real-time sports scores and game summary information . . . to user equipment 102." *Id.* (quoting Ex. 1016 ¶ 41).

For "transmit[ting] . . . via a first event information Internet communication channel between at least one first event socket of the at least one socket server and the first viewer client device of the first plurality of viewer devices," Petitioner cites Spivey's teaching of sending "live event data in real-time." Pet. 39 (quoting Ex. 1017, code (57)). Petitioner notes that Spivey's MQSD may be an internet server that communicates over the internet. *Id.* (citing Ex. 1017 ¶¶ 35, 179). Petitioner further cites Spivey's teaching that client devices "may request and participate in a websocket connection," which "typically comprises a two-way connection between two entities." *Id.* at 40 (quoting Ex. 1017 ¶¶ 43, 61). Petitioner also cites Ellis's

teaching of "providing event information over a separate communication path 152 than the video signal 150." *Id.* (quoting Ex. 1016 ¶¶ 39–41, Fig. 1).

Patent Owner disputes that the combination teaches the recited "event socket." Prelim. Resp. 34–44. First, Patent Owner argues that Spivey does not disclose a websocket connection between its message queue server and client devices. *Id.* at 35 (citing Ex. 1017 ¶¶ 43, 61; Ex. 2001 ¶¶ 223, 225–226). Instead, according to Patent Owner, Spivey discloses a websocket connection between a live data access server—which Petitioner has omitted from the combination—and client devices. *Id.* (citing Pet. 19, 37 & n.6; Ex. 1017 ¶¶ 43, 61, 74; Ex. 2001 ¶¶ 227–229).

Based on the present record, we do not agree with Patent Owner's arguments. Spivey teaches that clients "may request and participate in a websocket connection," i.e., "a two-way connection between two entities." Ex. 1017 ¶¶ 43, 61. Notwithstanding, the parties' declarants offer competing testimony as to whether Spivey teaches a websocket connection between Spivey's message queue server device and the client devices. *See* Ex. 1001 ¶ 354 & n.9; Ex. 2001 ¶¶ 223, 227–230. The relevant issue is whether Spivey requires an intermediary live access data server. Although we agree with Patent Owner that certain embodiments of Spivey depict a live data access server connected to client devices (*see, e.g.*, Ex. 1017, Fig. 1), we also find that Spivey teaches or at least suggests a direct connection between the message queue server device and client devices without an intermediary live data access server.

We agree with Petitioner (Pet. 37 n.6) that Spivey suggests the intermediary live data access server is optional. Specifically, Spivey

discloses that "system 100 *may* include a live data access server 130." Ex. 1017 ¶ 38 (emphasis added). Spivey also teaches that MQS communication component 308, which is included in message queue server device 310, "may . . . receive requests to subscribe to topics in a topic set 330, and may push data from topic queues 332-1, 332-n *to the subscribers of the topics corresponding to those topic queues*." *Id.* ¶ 46 (emphasis added). We also have considered Patent Owner's argument that "it is unclear how Spivey's message queue server device 410, which lacks an interface through which it could communicate with client devices, could include the claimed event socket." Prelim. Resp. 38. Yet Spivey discloses user interface 900 presented by live data app 210 residing on client device 200 that "allow[s] an operator 108 of a client device 110 to view and select topics of live data to subscribe to," which may comprise, for example, "the topics available from a message queue server." Ex. 1017 ¶ 84, Figs. 2, 9. Taken together, these passages better support Petitioner's and Dr. Wicker's assertions at this stage that Spivey at least suggests a direct connection between the message queue server device and client devices. Pet. 37 n.6; Ex. 1001 ¶ 354. We also credit preliminarily Petitioner's reason to omit the live data access server, which is to reduce latency consistent with Spivey's purpose. *Id.*

Patent Owner also argues that "Petitioner fails to show that Spivey's topic queues are '*event sockets*' under Petitioner's (and its [declarant's]) implied definition, which requires them to be 'uniquely addressable communication endpoint[s].'" *Id.* at 38–39; *see also* Pet. 37 (citing Ex. 1001 ¶ 352) (discussing a "uniquely addressable communication endpoint"). Rather, Patent Owner argues that Spivey's topic queues "are internal to its

MQS [message queue server]" and "lack any address at all through which they communicate." Prelim. Resp. 39–40 (citing Ex. 2001 ¶¶ 235–240).

As discussed above, we apply Petitioner's construction of "socket" and "event socket" for purposes of this Decision. *See supra* § II.C. We have considered Patent Owner's argument that "Spivey's 'topic queue' is merely an organization of data, such as a database table, that includes information about a particular topic" and not a communication endpoint. Prelim. Resp. 40–41. Dr. Rubin likewise testifies that a person of ordinary skill in the art "would not consider such a database, message queue, or any other internal data structure by themselves to be a 'uniquely addressable communication endpoints'" and that "[t]he only potential 'communication endpoint' Spivey discloses as being 'uniquely addressable' is the live data access server." Ex. 2001 ¶¶ 236–237. In contrast, Dr. Wicker testifies as follows:

> [I]t is my opinion that this information is provided via a connection between a topic queue and the first user equipment device. Users can access the MQSD using a URL. *See* Ex.1017 ¶¶81-82. Then, the user can access the specific topic queue she wishes to receive information from by using a text string, e.g., a topic label or Event ID, associated with a topic queue. *Id.* ¶179, Fig. 9 ("Gamecenter.nfl.ravenssteelers"). Thus, it is my opinion that a[n ordinarily skilled artisan] would have understood that Ellis in view of Spivey discloses distributing event information from a socket to a user device over an internet connection. Further, I believe a[n ordinarily skilled artisan] would have understood that the internet connection is established using a URL and text string identifying a uniquely addressable communication endpoint on the MQSD, where first event information is transmitted to a VCD.

Ex. 1001 ¶ 567.

Based on the preliminary record, we find that Petitioner's arguments and Dr. Wicker's testimony are supported by Spivey's disclosures that an "address may resemble a uniform resource locator (URL)" and user interface 900 that "allow[s] an operator 108 of a client device to view and select . . . topics available from a message queue server." Ex. 1017 ¶¶ 82, 84, Fig. 9. On the other hand, we find that Dr. Rubin's testimony is limited to addressing live data access server 130 and does not address sufficiently Spivey's teachings as a whole when understood from the perspective of an ordinarily skilled artisan. *See Sundance*,550 F.3d at 1361 n.3 ("What a prior art reference discloses or teaches is determined from the perspective of one of ordinary skill in the art."); *Hedges*, 783 F.2d at 1041 (noting that when evaluating claims for obviousness, "the prior art as a whole must be considered"). Therefore, we give Dr. Rubin's testimony less weight than Dr. Wicker's testimony at this preliminary stage. Accordingly, we are persuaded preliminarily by Petitioner's contention that the recited "event socket" is taught by Spivey's disclosures of a websocket connection and of data payloads placed on Spivey's topic queues that "relate to a specific game between two NFL teams" and include "for example, a score, a play, . . . , and so forth." *See, e.g.*, Ex. 1017 ¶¶ 43, 48–49, 51–52, 61, 66, Fig. 9.

For these reasons, Petitioner has shown sufficiently that the combination of Ellis and Spivey teaches limitation 1.8.

j. Secondary Considerations of Nonobviousness

Patent Owner asserts that objective indicia of nonobviousness support its position that Petitioner has not shown a reasonable likelihood of unpatentability of the challenged claims. *See* Prelim. Resp. 61–71.

Specifically, Patent Owner asserts long-felt need, industry praise, copying, and commercial success support Patent Owner's position.

To accord substantial weight to objective evidence of nonobviousness, the evidence must have a nexus to the claims. *Fox Factory, Inc. v. SRAM, LLC*, 944 F.3d 1366, 1373 (Fed. Cir. 2019). "A showing of nexus can be made in two ways: (1) via a presumption of nexus, or (2) via a showing that the evidence is a direct result of the unique characteristics of the claimed invention." *Volvo Penta of the Americas, LLC v. Brunswick Corp.*, 81 F.4th 1202, 1210 (Fed. Cir. 2023). A patentee is entitled to a presumption of nexus "when the patentee shows that the asserted objective evidence is tied to a specific product and that product 'embodies the claimed features, and is coextensive with them.'" *Fox Factory*, 944 F.3d at 1373 (quoting *Polaris Indus., Inc. v. Arctic Cat, Inc.*, 882 F.3d 1056, 1072 (Fed. Cir. 2018)). As discussed below, Patent Owner has not established a sufficient nexus between the challenged claims and Patent Owner's asserted objective indicia of nonobviousness. We also identify certain other deficiencies in Patent Owner's evidence.

Patent Owner does not attempt to show that a particular product embodies and is coextensive with the claimed features, so Patent Owner is not entitled to a presumption of nexus. *See Fox Factory*, 944 F.3d at 1373. And, to the extent Patent Owner attempts to address direct nexus, we find Patent Owner's remaining arguments to be conclusory and based on over-simplified characterizations of the claimed technology. *See, e.g.*, Prelim. Resp. 65 (stating without explanation that evidence of industry praise "result[s] directly from the claims—*i.e.*, the architecture discussed above (including a socket server and control server), as well as the system's ability

to "*provid[e] a first/second plurality of copies of a first/second live stream of digital content*" (*e.g.*, Claim 1)"), 71 (stating without explanation that evidence of industry praise was "a direct result of the claimed invention"). At this juncture, we accord little to no weight to Patent Owner's evidence of nexus between the proffered objective evidence and the claims of the '687 patent.

Although Patent Owner alleges copying, Patent Owner does not name a particular product of Petitioner's that allegedly copied Patent Owner's products. *See* Prelim. Resp. 66–67. Rather, Patent Owner merely cites to a 50-page infringement claim chart from the related parallel proceeding. *Id.* at 67 (citing Ex. 2001 ¶¶ 315–317; Ex. 2017). Patent Owner is reminded that "[a]rguments must not be incorporated by reference from one document into another document." 37 C.F.R. § 42.6(a)(3). At this stage, we decline to "play archeologist with the record" in order to understand Patent Owner's arguments, which "is precisely what the rule against incorporation by reference was intended to prevent." *Gen. Access Sols., Ltd. v. Sprint Spectrum L.P.*, 811 F. App'x 654, 657–58 (Fed. Cir. 2020). Further, Dr. Rubin merely cites the claim chart at Exhibit 2017 and states that he "understand[s] that Patent Owner contends that the Petitioner launched its own sport's [sic] streaming platform and incorporated the claimed invention into its own products." Ex. 2001 ¶ 316. He does not appear to have developed his own opinion regarding Petitioner's products. *Id.* For these reasons, and based on the present record, we accord Patent Owner's evidence of copying little to no weight.

Patent Owner's evidence also suffers from other deficiencies. For example, Patent Owner's evidence (Prelim. Resp. 62–64) does not establish

long felt and *unsolved* need. Dr. Rubin cites an article from 2015 describing "[b]roadcast latency [being] recognized by stream platforms around [the] mid-2010s" (Ex. 2001 ¶ 73 (citing Ex. 2034)), but the '687 patent claims priority to provisional applications filed in 2016 and 2017. Ex. 1003, code (60), 1:20–40. Moreover, certain of Patent Owner's industry praise evidence quotes former NBA commissioner David Stern (Prelim. Resp. 65), but he is described as "one of SportsCastr.Live's high-profile partners" and "a founding investor." Ex. 2006, 2; Ex. 2008. His interest in Patent Owner undermines that his views represent those of the "industry." Finally, Patent Owner acknowledges that commercial success is established by showing significant sales of the patented product, but Patent Owner does not cite any evidence of such significant sales. *See* Prelim. Resp. 67–71 (citing *Ormco Corp. v. Align Technology, Inc.*, 463 F.3d 1299, 1311–12 (Fed. Cir. 2006)).

For the above reasons, we accord Patent Owner's evidence of secondary considerations of nonobviousness little to no weight at this juncture.

k. Conclusion Regarding Claim 1

Petitioner has shown sufficiently at this juncture that the combination of Ellis and Spivey teaches all limitations of claim 1. Petitioner also has put forth a sufficient rationale for combining Spivey with Ellis with a reasonable expectation of success. We also have considered Patent Owner's evidence of secondary considerations of nonobviousness, and we accord it little or no weight at this juncture. Based on the present record, we determine that Petitioner has established a reasonable likelihood that it would prevail in

showing that the invention of claim 1 as a whole would have been obvious over the combination of Ellis and Spivey.

4. Claims 8 and 9

We have reviewed Petitioner's analysis for claims 8 and 9, which depend directly or indirectly from claim 1. Pet. 40–48. Patent Owner relies on the same arguments discussed above. We are persuaded preliminarily by Petitioner's analysis for claims 8 and 9. Based on the present record, Petitioner has established a reasonable likelihood that it would prevail in showing that the inventions of claims 8 and 9 as a whole would have been obvious over the combination of Ellis and Spivey.

E. Obviousness Grounds Based on Ellis, Spivey, and Herzog

Petitioner contends that claims 2–7 would have been obvious over the combination of Ellis, Spivey, and Herzog. Pet. 48–58. Patent Owner disputes Petitioner's contentions. Prelim. Resp. 45, 61–71.

1. Herzog

Herzog is a U.S. patent application publication titled "Time Synchronization of Video and Data Inside a Mobile Device" that discloses a mobile device including a processor configured to receive and format live video data, audio data, and meta-data for display on the mobile device, and synchronize selected meta-data with the video and audio for simultaneous display. Ex. 1015, codes (54), (57). Figure 4 of Herzog is reproduced below.

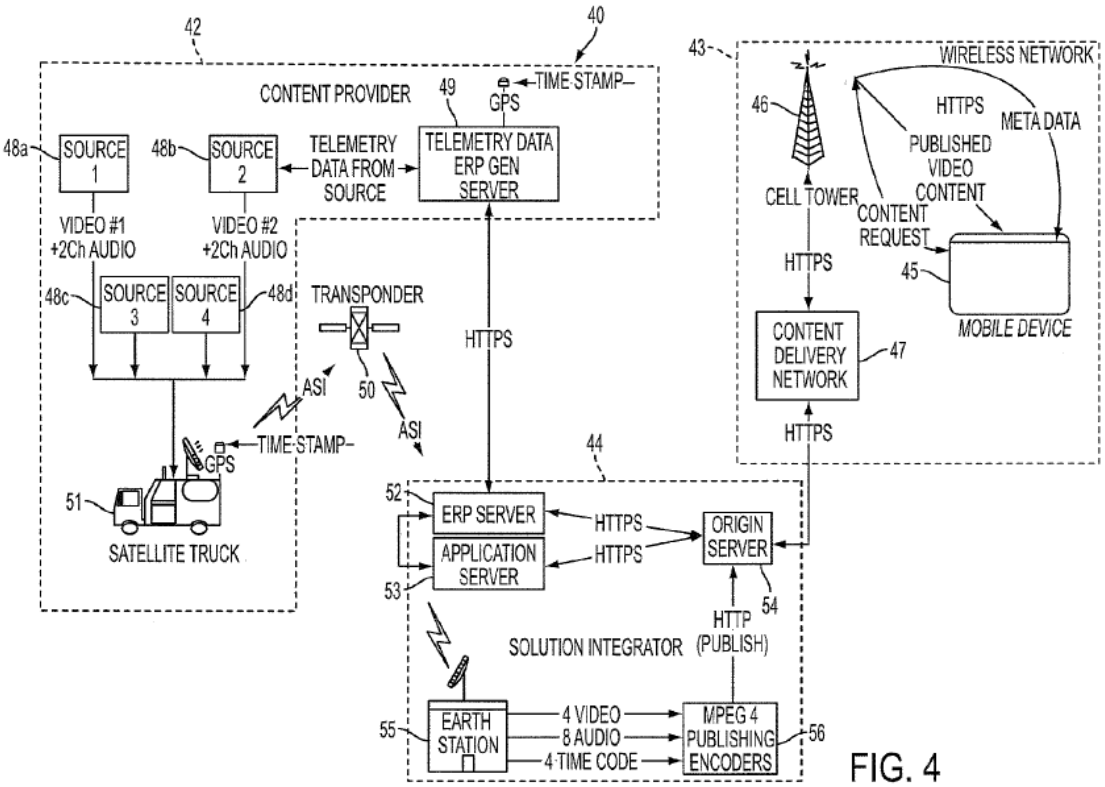

FIG. 4

Figure 4 shows system 40 that provides communications to mobile device 45 in wireless network 43 via content delivery network 47. Ex. 1015 ¶¶ 9, 43. System 40 includes content provider 42, which provides video and audio data of an event occurring in real time, along with meta-data. *Id.* ¶ 45. Content provider 42 provides video/audio streams from imaging sources 48*a*–48*d*. *Id.* ¶ 46. Content provider 42 also includes an Enhanced Result Protocol (ERP) generator server 49 configured to receive meta-data from imaging sources 48*a*–48*d*. *Id.* ¶ 47. ERP generator server 49 extracts meta-data parameters that may be of interest to a user, formats the extracted meta-data into an HTTPS protocol, and transmits the formatted meta-data to solution integrator 44. *Id.* Solution integrator 44 transmits the video/audio stream and meta-data to content delivery network 47 for delivery to mobile device 45. *Id.* ¶¶ 48–51.

Petitioner notes that Herzog was published on June 11, 2015, and contends that Herzog qualifies as prior art under 35 U.S.C. § 102(a). Pet. 6. Patent Owner does not dispute the prior art status of Herzog at this juncture. For purposes of this Decision, we determine that Herzog qualifies as prior art under 35 U.S.C. § 102(a) because Herzog's publication date of June 11, 2015, is before the effective filing date of the challenged claims, which is August 7, 2017. Ex. 1003, code (63); Ex. 1015, code (43).

2. Claims 2–7

Building on its obviousness rationale based on Ellis and Spivey, Petitioner contends that an ordinarily skilled artisan "would have added Herzog to implement its feature of multiple live streams from one sporting event." Pet. 49 (citing Ex. 1001 ¶¶ 120–124). Petitioner explains that "providing more content to a content distribution system such as Ellis by adding video feeds from different perspectives of a live event for the user's benefit." *Id.* at 49–50 (citing Ex. 1001 ¶¶ 120–122; Ex. 1015 ¶ 46). Based on the present record, we are persuaded preliminarily by Petitioner's obviousness rationale.

We have reviewed Petitioner's analysis for the limitations of claims 2–7, which depend directly or indirectly from claim 1. Pet. 50–58. Patent Owner relies on the same arguments discussed above. We are persuaded preliminarily by Petitioner's analysis for claims 2–7. Based on the present record, Petitioner has established a reasonable likelihood that it would prevail in showing that the inventions of claims 2–7 as a whole would have been obvious over the combination of Ellis, Spivey, and Herzog.

F. Obviousness Grounds Based on Herzog, Ellis, and Spivey

Petitioner contends that claims 1–9 would have been obvious over the combination of Herzog, Ellis, and Spivey. Pet. 59–87. Patent Owner disputes Petitioner's contentions. Prelim. Resp. 46–71.

1. Claim 1

a. Rationale for the Combination

Similar to the Ellis–Spivey ground discussed above (*see supra* § II.D.3.a), Petitioner contends that an ordinarily skilled artisan "would have known that the websocket client-server communication protocol employed by Spivey was an alternative to the HTTP polling used by Herzog." Pet. 60 (citing Ex. 1001 ¶¶ 126, 142–143). As such, Petitioner contends an ordinarily skilled artisan would have incorporated Spivey's message queue server device (MQSD) into Herzog's origin server "to achieve full-duplex communications between a client and a remote host with low latency." *Id.* at 60–61 (citing Ex. 1001 ¶¶ 80–87, 143), 71 (citing Ex. 1001 ¶ 456). Petitioner further contends that an ordinarily skilled artisan "would have appreciated the benefits associated with Spivey's MQSD (socket server) which establishes websocket connections with client devices, including convenient and efficient full-duplex communications between a client and a remote host with low latency," thus improving "Herzog's latency issues." *Id.* at 61 (citing Ex. 1001 ¶ 144; Ex. 1017 ¶¶ 27–28, 43, 61, 74, 92, 96). According to Petitioner, an ordinarily skilled artisan "would have had a reasonable expectation of success in combining Herzog with Spivey because Spivey contemplates being implemented in a digital content delivery system such as Herzog." *Id.* at 62 (citing Ex. 1001 ¶ 147; Ex. 1017 ¶ 155).

Petitioner also cites the complementary nature of the references and the simple substitution of known elements as supporting the predictable success of the combination. *Id.* at 62–63 (citing Ex. 1001 ¶¶ 147–148)

Petitioner additionally contends that, "[t]o the extent Herzog does not specifically describe multiple live event streaming," an ordinarily skilled artisan "would have found it obvious to implement such functionality into Herzog/Spivey, as taught by Ellis." Pet. 63 (citing Ex. 1001 ¶ 155–157; Ex. 1016 ¶¶ 39–41, Fig. 2B). In particular, Petitioner cites Ellis's teaching of providing multiple live streams of digital content from two different live sporting events. *Id.* at 65 (citing Ex. 1016 ¶¶ 62–63, Fig. 2B). Petitioner contends that an ordinarily skilled artisan "would have understood that Herzog was already equipped to provide multiple different live video and meta-data streams," and an ordinarily skilled artisan "would have been motivated to configure Herzog with Ellis's multiple event functionality because . . . users would enjoy having more content options, *e.g.*, multiple live event streams, chat information, and advertising content." *Id.* at 63 (citing Ex. 1001 ¶ 157; Ex. 1016 ¶¶ 39–41, 62, Figs. 1, 2B). Petitioner notes that Herzog "already provides multiple live streams," so an ordinarily skilled artisan "would have understood that adding a second live event to Herzog . . . applies a known technique to a known device that was ready for improvement to yield a predictable result." *Id.* at 64 (citing Ex. 1001 ¶ 158).

Patent Owner disputes that an ordinarily skilled artisan would have combined Spivey with Herzog. Prelim. Resp. 46–54. Specifically, Patent Owner argues that Petitioner's proposed combination is inoperable and departs from the express teachings of Herzog. *Id.* at 47–51. In particular, Patent Owner argues that "Herzog's system *requires* a robust latency period

to achieve its stated goal: matching timestamped video/audio steams with timestamped meta-data streams at a mobile device." *Id.* at 47 (citing Ex. 1015 ¶¶ 56, 64, 74; Ex. 2001 ¶¶ 281–283). Patent Owner also puts forth arguments similar to those for the Spivey–Ellis ground disputing that an ordinarily skilled artisan would have incorporated elements from Spivey to solve a latency problem in Herzog. *Id.* at 51–54. Patent Owner additionally disputes that an ordinarily skilled artisan would have combined Ellis with Herzog. Prelim. Resp. 54–56. According to Patent Owner, "Petitioner's proposals rest on conclusory statements that provide no guidance for how, exactly, Herzog would work in the context of a multi-event system, especially as the Herzog teachings are limited to a single event." *Id.* at 54–55 (citing Ex. 2001 ¶¶ 298–301); *see also id.* at 50 (similar argument). Patent Owner also argues that Petitioner fails to explain "how the time stamp matching techniques of Herzog would be workable" given "the exponential technical complexity involved in time stamp matching across multiple live events." *Id.* at 55 (citing Ex. 2001 ¶¶ 300–301); *see also id.* at 50–51 (similar argument).

Based on present record, we are persuaded preliminarily by Petitioner's reasons for combining Spivey and Ellis with Herzog. We start with Petitioner's contention that an ordinarily skilled artisan would have implemented Herzog's origin server as a websocket server based on Spivey's teachings in order to improve latency. Pet. 59–63. Petitioner's contention is supported by the same disclosures in Spivey that were discussed with respect to the Ellis–Spivey ground. *See supra* § II.D.3.a. We also are persuaded preliminarily by Petitioner's contention that "it would have been obvious to substitute any of Herzog's meta-data distribution

elements with any combination of Spivey's LDSD, MQSD, and/or Live Data Source(s), which are similarly involved in transmitting live event data to users and may be configured in any manner." Pet. 63 (citing Ex. 1001 ¶ 148; Ex. 1017 ¶ 34). This supports Petitioner's assertion of expected success in combining Herzog and Spivey based on the simple substitution of known elements. *Id.* at 62–63 (citing Ex. 1001 ¶ 148).

Regarding Patent Owner's argument that improved latency might cause inoperability, we note that Herzog teaches compensating for different types of data having different latencies. Ex. 1015 ¶ 82. And, even if the resulting combination would have required processing a faster meta-data stream, Petitioner need not show that its combination is the best or preferred combination. *See, e.g., Novartis Pharm. Corp. v. West-Ward Pharm. Int'l Ltd.*, 923 F.3d 1051, 1059 (Fed. Cir. 2019) ("[O]ur case law does not require that a particular combination must be the preferred, or the most desirable, combination described in the prior art in order to provide motivation for the current invention."); *PAR Pharm., Inc. v. TWI Pharms., Inc.*, 773 F.3d 1186, 1197–98 (Fed. Cir. 2014) (holding that it is not necessary to show that a combination is "the best option, only that it be a suitable option."). Additionally, the challenged claims do not recite that the first event information must be gated or synchronized with the first live sporting event, so this argument is not commensurate with the scope of the challenged claims.

Petitioner's contentions and Dr. Wicker's testimony regarding latency rely on Spivey's disclosures to support their assertion that Herzog's system is susceptible to latency issues. Pet. 61; Ex. 1001 ¶ 144 (citing Ex. 1017 ¶¶ 27–28). Spivey describes that "[a]s technology allows users to receive

such data away from desktop computers, the demand for live event data *in real time* on mobile devices has increased." Ex. 1017 ¶ 21 (emphasis added). Spivey also describes that its technology reduces delay "providing *a significant advantage over the conventional practices*." *Id.* ¶ 28 (emphasis added). At this early juncture, we find that Petitioner's argument of motivation to achieve reduced latency is supported sufficiently for purposes of institution based on Spivey's disclosure of user "demand" for "live event data in real time" and that Spivey's technology would have been understood to provide "*a significant advantage over the conventional practices*." *Id.* ¶¶ 2, 28 (emphasis added). And, even though Patent Owner and Dr. Rubin argue that Herzog does not have a latency problem (Prelim. Resp. 51–52 (citing Ex. 2001 ¶¶ 287–291)), we find Petitioner has the better argument based on the preliminary record.

Regarding Petitioner's proposed combination of Herzog and Ellis, we are persuaded preliminarily that an ordinarily skilled artisan would have made the combination so "users would enjoy having more content options, *e.g.*, multiple live event streams, chat information, and advertising content." Pet. 63 (citing Ex. 1001 ¶ 157; Ex. 1016 ¶¶ 39–41, Figs. 1, 2B). Patent Owner's arguments to the contrary are unavailing because they are based on incorporating technological features of Ellis's tuning technology. *See* Prelim. Resp. 50 (citing Ex. 2001 ¶¶ 300–301); *see also id.* at 54–55 (citing Ex. 2001 ¶¶ 298–301). Petitioner's combination does not rely on that technology; it merely incorporates Ellis's teaching of providing more content options, such as options from multiple broadcasters, into Herzog's system. *See* Pet. 63; Ex. 1001 ¶ 157. Petitioner is not required to show that all of Ellis's features can be bodily incorporated in Herzog's system in order

to prove obviousness. *See In re Keller*, 642 F.2d 413, 425 (CCPA 1981) ("The test for obviousness is not whether the features of a secondary reference may be bodily incorporated into the structure of the primary reference," but, "[r]ather, the test is what the combined teachings of the references would have suggested to those of ordinary skill in the art."). Furthermore, Herzog teaches receiving four streams from four different imaging sources 48a–48d (Ex. 1015 ¶ 46), and Petitioner's proposed modification is merely that those four different streams may be from different broadcasters. *See* Pet. 67.

For reasons similar to those discussed above (*see supra* § II.D.3.a), we are persuaded that the complementary nature of Herzog's, Ellis's, and Spivey's teachings supports an expectation of success in combining these references (*see* Pet. 61–62), and we find unavailing Patent Owner's arguments to the contrary (*see* Prelim. Resp. 51–56). In particular, Herzog is similar to Ellis and Spivey insofar as Herzog relates to content delivery for real-time events quickly to multiple users over the internet. *See, e.g.*, Ex. 1015 ¶ 49 (describing publishing "video imagery, related audio and meta-data that are received from the content provider 42 onto the content delivery network 47 for presentation to users/consumers of the content via mobile devices such as device 45"), ¶ 51 (describing that an "Internet server provider (ISP)" may transfer data to local content delivery network 47), Figs. 1, 4, 7.

Patent Owner's arguments that Petitioner relies on impermissible hindsight bias to "reconstruct the invention" (Prelim. Resp. 56–60) and Dr. Rubin's related testimony appear to be contradicted by Petitioner's evidence in the preliminary record. As discussed above, Petitioner's

arguments that a person of ordinary skill in the art would have made its proposed combination are sufficient for purposes of institution.

For these reasons, we are persuaded preliminarily by Petitioner's rationale for combining Herzog, Ellis, and Spivey.

b. Preamble 1.0

The preamble of claim 1 recites

> [a] system for providing, to a first plurality of viewer client devices, a first plurality of copies of a first live stream of digital content relating to a first live sporting event, and for providing, to a second plurality of viewer client devices, a second plurality of copies of a second live stream of digital content relating to the first live sporting event or a second live sporting event.

Ex. 1003, 56:46–52. Petitioner cites Herzog's teaching of providing "live video and audio data" to user devices over a "communication network." Pet. 64 (citing Ex. 1015, code (57)). Petitioner also cites Herzog's example of providing "multiple video/audio streams of race cars and drivers, as they are imaged at different locations on the race track." *Id.* at 64–65 (citing, *inter alia*, Ex. 1015 ¶ 45, Fig. 4). Furthermore, Petitioner cites Ellis's teaching of "providing multiple live streams of digital content that is of two different live sporting events." *Id.* at 65 (citing Ex. 1016 ¶¶ 62–63, Fig. 2B). According to Petitioner, the combination of Herzog and Ellis "provide[s] a system where multiple different users can select the same, or different, live stream of digital content that relates to a live sporting event." *Id.* at 65–66 (citing Ex. 1001 ¶¶ 444–445).

Patent Owner does not dispute Petitioner's analysis of the preamble at this time. Based on the present record, we are persuaded preliminarily that

the combination of Herzog and Ellis teaches the preamble.[6] In particular, Petitioner shows sufficiently that Herzog teaches a system that provides multiple streams of data for a live sporting event (*see, e.g.*, Ex. 1015, code (57), ¶ 45, Fig. 4), and Ellis teaches providing video streams of more than one event (*see, e.g.*, Ex. 1016 ¶¶ 62–63, Fig. 2B).

c. Limitation 1.1

Claim 1 further recites "A) a plurality of media sources to" perform various steps. Ex. 1003, 56:53. Petitioner cites Herzog's multiple MPEG 4 publishing encoders that can "'encode[]' the video and audio data and then the 'encoded video is then published to the content delivery network 47 (for example) via IP utilizing [] HLS [HTTP Live Streaming]." Pet. 66 (citing Ex. 1015 ¶¶ 48, 49, 55).

At this juncture, Patent Owner does not dispute Petitioner's analysis of this limitation. Based on the present record, Petitioner has shown sufficiently that Herzog's multiple MPEG 4 publishing encoders for encoding video audio data teaches the recited "media sources." *See, e.g.*, Ex. 1015 ¶¶ 48, 49, 55.

d. Limitation 1.2

Claim 1 further recites that the plurality of media sources "receive the first live stream of digital content and the second live stream of digital content." Ex. 1001, 56:54–55. Petitioner contends that Herzog's MPEG 4

[6] Because Petitioner shows sufficiently for purposes of institution that the combination of Herzog and Ellis teaches the preamble, we need not determine whether the preamble is limiting. *See Realtime Data*, 912 F.3d at 1375.

publishing encoders receive the video and audio data from a live event using "communication technologies for communicating multiple video and audio streams." Pet. 66 (citing Ex. 1015 ¶¶ 46, 49).

At this juncture, Patent Owner does not dispute Petitioner's analysis. Based on the present record, we are persuaded preliminarily that Herzog teaches this limitation. *See, e.g.*, Ex. 1015 ¶¶ 46, 49

e. Limitations 1.3 and 1.4

Claim 1 further recites that the plurality of media sources

> provide a first copy of the first plurality of copies to a first viewer client device of the first plurality of viewer client devices via a first video Internet communication channel between the plurality of media sources and the first viewer client device of the first plurality of viewer client devices; and
>
> provide a first copy of the second plurality of copies to a first viewer client device of the second plurality of viewer client devices via a second video Internet communication channel between the plurality of media sources and the first viewer client device of the second plurality of viewer client devices.

Ex. 1003, 56:56–67. For the viewer client devices, Petitioner contends that "Herzog discloses providing multiple different users with the option to select any of the available video feeds." Pet. 67 (citing Ex. 1015 ¶ 70). Specifically, Petitioner posits an example where "Herzog . . . provides at least four different video streams" and "two or more users would select a first stream to view, and two or more different users would select a second stream to view." *Id.* (citing Ex. 1001 ¶ 449; Ex. 1015 ¶¶ 46, 70).

Petitioner further contends that an ordinarily skilled artisan "would have understood that each user device receives their own copy of the video stream" in light of Herzog's teaching of providing a selected video stream to

each user individually via HTTP live streaming. Pet. 67 (citing Ex. 1001 ¶ 450; Ex. 1015 ¶ 51). Regarding the recited video internet communication channels, Petitioner cites Herzog's teaching of sending video via HTTP Live Streaming (HLS), with each user receiving an individual copy from the MPEG 4 publishing encoders over a video internet communication channel that is unique to each user device. *Id.* at 67–68 (citing Ex. 1001 ¶ 451; Ex. 1015 ¶¶ 2, 51).

At this juncture, Patent Owner does not dispute Petitioner's analysis. Based on the present record, Petitioner shows sufficiently that Herzog teaches providing multiple different video streams to multiple different users over individual HTTP live streaming channels. *See, e.g.*, Ex. 1015 ¶¶ 2, 15, 46, 51, 70.

f. Limitation 1.5

Claim 1 further recites "B) a control server to periodically retrieve, via the Internet, first event information germane to the first live sporting event." Ex. 1003, 57:1–3. Petitioner contends that Herzog's Enhanced Result Protocol (ERP) Server is a generic server that retrieves meta-data from the ERP generator server over the internet in HTTPS format. Pet. 68–69 (citing Ex. 1015 ¶¶ 16, 17, 45, 47, 50, Fig. 4). According to Petitioner, Herzog's retrieved meta-data (e.g., the "status of each car and driver in the race") is germane to the live sporting event (e.g., a race). *Id.* (citing Ex. 1015 ¶ 45).

Based on an analysis similar to that discussed above (*see supra* § II.D.3.e), Petitioner also cites Ellis's supplemental content source as periodically retrieving information sports scores, wagering data, etc., over the internet. Pet. 69.

Petitioner acknowledges that "a periodic time interval is not mentioned in Herzog or Ellis," but Petitioner contends that an ordinarily skilled artisan "would have understood that any system that provides real-time sports statistics, such as Herzog, would necessarily update the statistics on a periodic basis. Pet. 69 (citing Ex. 1001 ¶ 454). Petitioner explains that, "[t]o reduce latency using an HTTP connection," an ordinarily skilled artisan "would have known to have Herzog's ERP server periodically check for the content availability as often as possible." *Id.* at 69–70 (citing Ex. 1001 ¶ 454).

Patent Owner does not dispute Petitioner's analysis at this juncture. We note that Petitioner's proposed combination does not incorporate Ellis's supplemental content source and, instead, only incorporates Ellis's teachings on multiple live events into the Herzog/Spivey combination. *See* Pet. 63–64. Thus, at this preliminary stage, we are not persuaded by Petitioner's contentions regarding Ellis's supplemental content source for teaching limitation 1.5 because, based on the current record, Petitioner has not shown sufficiently how Ellis's supplemental content source would be part of Petitioner's proposed combination. Notwithstanding, we are persuaded preliminarily that Herzog's ERP Server teaches limitation 1.5. *See, e.g.*, Ex. 1001 ¶ 454; Ex. 1015 ¶¶ 45, 47, 50, Fig. 4.

g. Limitation 1.6

Claim 1 further recites "C) at least one socket server communicatively coupled to the control server." Ex. 1003, 57:4–5. Petitioner notes that Herzog teaches providing live event video and meta-data streams over separate connections, but acknowledges that "Herzog does not specifically

disclose some backend server architecture supporting the data distribution." Pet. 59–60 (citing Ex. 1001 ¶¶ 126, 142–143, 156; Ex. 1015 ¶¶ 12, 48–52, 67, 80–81, Figs. 4, 7). As such, and based on its reasons for combining Spivey with Herzog (*see supra* § II.F.1.a), Petitioner contends that an ordinarily skilled artisan would have incorporated Spivey's message queue server device (MQSD) into Herzog's origin server "to achieve full-duplex communications between a client and a remote host with low latency." *Id.* at 60–61 (citing Ex. 1001 ¶¶ 80–87, 142–143), 71 (citing Ex. 1001 ¶ 456). Petitioner further contends that an ordinarily skilled artisan would have understood that Herzog's ERP server (i.e., the recited "control server") transmits HTTPS information to Spivey's MQSD (i.e., the recited "socket server"). *Id.* at 71 (citing Ex. 1001 ¶ 457).

At this juncture, Patent Owner does not dispute Petitioner's analysis.[7] Petitioner shows sufficiently that Herzog's ERP server (i.e., the "control server") transmits data to Herzog's origin server as modified to incorporate Spivey's message queue server device (i.e., the "socket server"). *See, e.g.*, Ex. 1001 ¶¶ 456–457; Ex. 1015 ¶¶ 50–51, 83, Fig. 4. For the same reasons mentioned above, we also are persuaded preliminarily that an ordinarily skilled artisan would have modified Herzog's origin server to include Spivey's message queue server device. *See supra* § II.F.1.a; Ex. 1001 ¶ 456.

[7] We note that Patent Owner disputes Petitioner's analysis of a related claim term, i.e., "event socket," for limitation 1.8. We discuss those arguments above and below. *See supra* § II.D.3.i; *infra* § II.F.1.i.

h. Limitation 1.7

Claim 1 further recites that that the socket server "receive[s] from the control server at least the first event information." Ex. 1003, 57:6–7. Petitioner notes that Herzog's Enhanced Result Protocol (ERP) Server "receives the meta-data from ERP generator server 49 in HTTPS communication format" and "acts as an intermediary between the ERP generator server and the origin server." Pet. 72 (quoting Ex. 1015 ¶¶ 50–51, Fig. 4). According to Petitioner, "[i]ncorporating Spivey's MQSD into Herzog's origin server would thus allow the MQSD (socket server) to receive from the ERP Server (control server) the meta-data provided (first event information)." *Id.* (citing Ex. 1001 ¶ 459).

At this juncture, Patent Owner does not dispute Petitioner's analysis.[8] Based on the present record, Petitioner shows sufficiently that Herzog's origin server as modified to incorporate Spivey's message queue server device (i.e., the "socket server") receives meta-data from Herzog's ERP server (i.e., the "control server"). *See, e.g.*, Ex. 1001 ¶ 459; Ex. 1015 ¶¶ 50–51, Fig. 4.

i. Limitation 1.8

Claim 1 further recites that the socket server

> transmit[s] the first event information to at least the first viewer client device of the first plurality of viewer client devices via a first event information Internet communication channel between at least one first event socket of the at least one socket server and the first viewer client device of the first plurality of

[8] We note that Patent Owner disputes Petitioner's analysis of a related claim term, i.e., "event socket," for limitation 1.8. We discuss those arguments above and below. *See supra* § II.D.3.i; *infra* § II.F.1.i.

> viewer devices, wherein the at least one first event socket corresponds to the first event information germane to the first live sporting event.

Ex. 1003, 57:8–16. Petitioner again cites Spivey's topic queues for teaching the recited "event socket." Pet. 73 (citing Ex. 1001 ¶¶ 461–463); *see also supra* § II.D.3.h. For "transmit[ting] the first event information to at least the first viewer client device of the first plurality of viewer client devices," Petitioner again cites Herzog's teaching of multiple different users having the option to receive any available video feed. Pet. 73; *see also supra* § II.F.1.e. Petitioner further notes that Herzog's origin server can transmit meta-data such as car position to content delivery network 47, and the user receives such meta-data "in an HTTPS communications protocol." Pet. 73 (citing Ex. 1015 ¶¶ 45, 51). Petitioner additionally cites Spivey's teaching that the MQSD "may push data from topic queues . . . to the subscribers of the topics corresponding to those topic queues." *Id.* (citing Ex. 1017 ¶ 46). According to Petitioner, an ordinarily skilled artisan "would have known that the websocket client-server communication protocol employed by Spivey was an alternative to the HTTP polling used by Herzog." *Id.* (citing Ex. 1001 ¶ 464).

For "transmit[ting] . . . via a first event information Internet communication channel between at least one first event socket of the at least one socket server and the first viewer client device of the first plurality of viewer devices," Petitioner cites Herzog's teaching of "providing event information over a separate communication path than the video signal where there is 'a unique video and metadata source that do not follow the same path of transmission.'" Pet. 74 (citing Ex. 1015 ¶¶ 47–51, 83, Figs. 1, 5, 4, 6). Petitioner additionally cites the same teachings discussed regarding the

combination of Spivey and Ellis teaching the distribution of event information from a socket to a user device over an internet connection using a URL and text string. *Id.* at 74–75 (citing Ex. 1001 ¶ 467); *see supra* § II.D.3.i.

Patent Owner relies on the same arguments discussed above with respect to the Ellis–Spivey ground. Prelim. Resp. 60; *see supra* § II.D.3.i. For the same reasons discussed above, Petitioner has shown sufficiently that Spivey teaches the recited "event socket." *See supra* § II.D.3.i. Petitioner also has shown sufficiently that Herzog teaches providing meta-data (i.e., "event information") and video to clients via separate communication paths. *See, e.g.*, Ex. 1015 ¶¶ 47–51, 83, Figs. 1, 5, 4, 6.

j. Secondary Considerations of Nonobviousness

Our analysis of secondary considerations of nonobviousness from above applies equally to this ground. *See supra* § II.D.3.j.

k. Conclusion Regarding Claim 1

Petitioner has shown sufficiently at this juncture that the combination of Herzog, Ellis, and Spivey teaches all limitations of claim 1. Petitioner also has put forth a sufficient rationale for combining Ellis and Spivey with Herzog with a reasonable expectation of success. We also have considered Patent Owner's evidence of secondary considerations of nonobviousness, and we accord it little or no weight at this juncture. Based on the present record, we determine that Petitioner has established a reasonable likelihood that it would prevail in showing that the invention of claim 1 as a whole would have been obvious over the combination of Herzog, Ellis, and Spivey.

2. Claims 2–9

We have reviewed Petitioner's analysis for claims 2–9, which depend directly or indirectly from claim 1. Pet. 75–87. Patent Owner relies on the same arguments discussed above. We are persuaded preliminarily by Petitioner's analysis for claims 2–9. Based on the present record, Petitioner has established a reasonable likelihood that it would prevail in showing that the inventions of claims 2–9 as a whole would have been obvious over the combination of Herzog, Ellis, and Spivey.

III. CONCLUSION

After considering the evidence and arguments presented in the current record, we determine that Petitioner has demonstrated a reasonable likelihood that it would prevail with respect to at least one of the claims challenged in the Petition. Accordingly, we institute an *inter partes* review on all of the challenged claims and all grounds presented in the Petition. At this stage of the proceeding, we have not made a final determination as to the patentability of the challenged claims.

IV. ORDER

Accordingly, it is

ORDERED that pursuant to 35 U.S.C. § 314, *inter partes* review is instituted as to claims 1–9 of the ’687 patent with respect to all grounds of unpatentability presented in the Petition; and

FURTHER ORDERED that *inter partes* review is commenced on the entry date of this Order, and pursuant to 35 U.S.C. § 314(c) and 37 C.F.R. § 42.4, notice is hereby given of the institution of a trial.

For PETITIONER:

W. Baker
Michael Dinnella
KIRKLAND & ELLIS LLP
todd.baker@kirkland.com
mtd5145@gmail.com

For PATENT OWNER:

Brian Eutermoser
Mikaela Stone
KING & SPALDING LLP
beutermoser@kslaw.com
mikaela.stone@kslaw.com

Trials@uspto.gov
571-272-7822

Paper 8
Entered: March 13, 2025

UNITED STATES PATENT AND TRADEMARK OFFICE

BEFORE THE PATENT TRIAL AND APPEAL BOARD

GENIUS SPORTS LTD.,
Petitioner,

v.

SPORTSCASTR INC.
d/b/a PANDA INTERACTIVE,
Patent Owner.

IPR2024-01305
Patent 10,805,687 B2

Before BARBARA A. PARVIS, JOHN A. HUDALLA, and SHARON FENICK, *Administrative Patent Judges*.

HUDALLA, *Administrative Patent Judge*.

DECISION
Granting Institution of *Inter Partes* Review
35 U.S.C. § 314

Genius Sports Ltd. ("Petitioner") filed a Petition (Paper 1, "Pet.") requesting an *inter partes* review of claims 1–9 ("the challenged claims") of U.S. Patent No. 10,805,687 B2 (Ex. 1003, "the '687 patent"). Petitioner filed a Declaration of Stephen B. Wicker, Ph.D. (Ex. 1001) with its Petition. SportsCastr Inc. d/b/a PANDA Interactive ("Patent Owner") filed a Preliminary Response (Paper 7, "Prelim. Resp."). Patent Owner filed a Declaration of Aviel Rubin, Ph.D. (Ex. 2001) with its Preliminary Response.

We have authority to determine whether to institute an *inter partes* review. *See* 35 U.S.C. § 314 (2018); 37 C.F.R. § 42.4(a) (2023). Under 35 U.S.C. § 314(a), we may not authorize an *inter partes* review unless the information in the petition and the preliminary response "shows that there is a reasonable likelihood that the petitioner would prevail with respect to at least 1 of the claims challenged in the petition." For the reasons that follow, we institute an *inter partes* review as to claims 1–9 of the '687 patent on all grounds of unpatentability presented.

I. BACKGROUND

A. Real Parties-in-Interest

Petitioner identifies Genius Sports Ltd. as the real party-in-interest. Pet. 3. Patent Owner identifies SportsCastr Inc. as the real party-in-interest. Paper 4, 1.

B. Related Matters

As required by 37 C.F.R. § 42.8(b)(2), the parties identify the following related matters:

SportsCastr Inc. v. Sportradar Group, AG, 2:23-cv-00472 (E.D. Tex filed Oct. 5, 2023);

SportsCastr Inc. v. Genius Sports Ltd., No. 2:23-cv-04771 (E.D. Tex. filed Oct. 5, 2023) ("the underlying litigation");

IPR2024-01307;[1]

IPR2024-01308;

IPR2024-01309;

IPR2024-01310; and

IPR2024-01311.

Pet. 3–4; Paper 4, 1.

C. The '687 Patent

The '687 patent is titled "Systems, Apparatus, and Methods for Scalable Low-Latency Viewing of Broadcast Digital Content Streams of Live Events, and Synchronization of Event Information with Viewed Streams, via Multiple Internet Channels." Ex. 1003, code (54). The '687 patent relates to systems and methods that facilitate providing live stream video and/or audio broadcasts to viewers in real time. *Id.* at 2:57–66. Figure 1A of the '687 patent is reproduced below.

[1] Of note, Petitioner concurrently filed another petition challenging claims 19–25 and 27–30 of the '687 patent in IPR2024-01307. Pet. 3–4; Paper 3, 3. Petitioner also filed a ranking of the two petitions in which it ranked the petition in IPR2024-01307 first and the instant Petition second. Paper 3, 3. Notwithstanding, Patent Owner does not put forth any arguments seeking discretionary denial under 35 U.S.C. § 314(a) related to Petitioner's use of more than one petition against the '687 patent. Moreover, we are satisfied by Petitioner's stated reasons for filing two petitions. *See* Paper 3, 2–3.

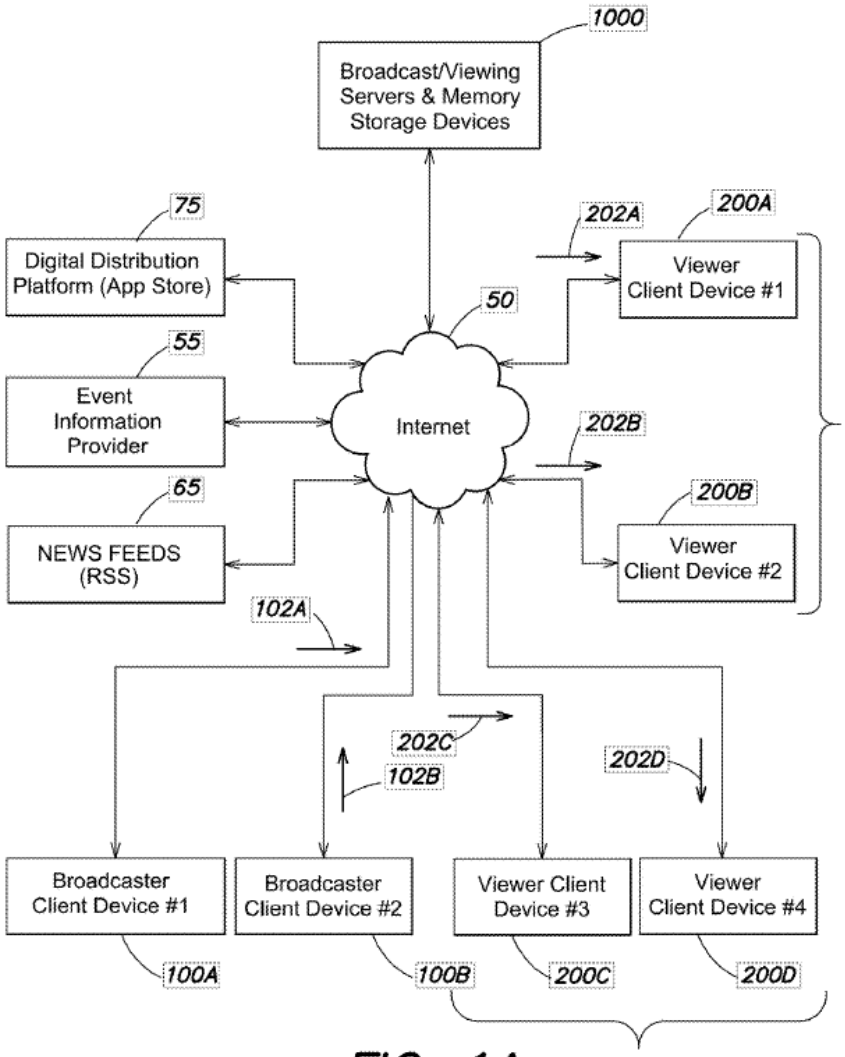

FIG. 1A

Figure 1A is a block diagram of a system facilitating live streaming digital content from multiple broadcasters to multiple viewers. *Id.* at 11:19–22. The system shown in Figure 1A includes broadcaster client devices 100A and 100B, viewer client devices 200A–200D, broadcast/viewing servers and memory storage devices 1000, event information provider 55, one or more news feeds 65, and digital distribution platform 75, all coupled together via Internet 50. *Id.* at 14:52–60. First broadcaster client device 100A provides first live stream of digital content 102A, and copies 202A and 202B of digital content 102A are received by viewer client devices 200A and 200B,

respectively. *Id.* at 15:21–28. Similarly, second broadcaster client device 100B provides second live stream of digital content 102B, and copies 202C and 202D are received by viewer client devices 200C and 200D, respectively. *Id.* at 15:28–33. Broadcast/viewing servers and memory storage devices 1000 may retrieve news and/or event information germane to a live stream of digital content from news feeds 65 and event information provider 55 and convey the relevant news and/or event information to one or more client devices. *Id.* at 15:33–40.

Figure 2 of the ’687 patent is reproduced below.

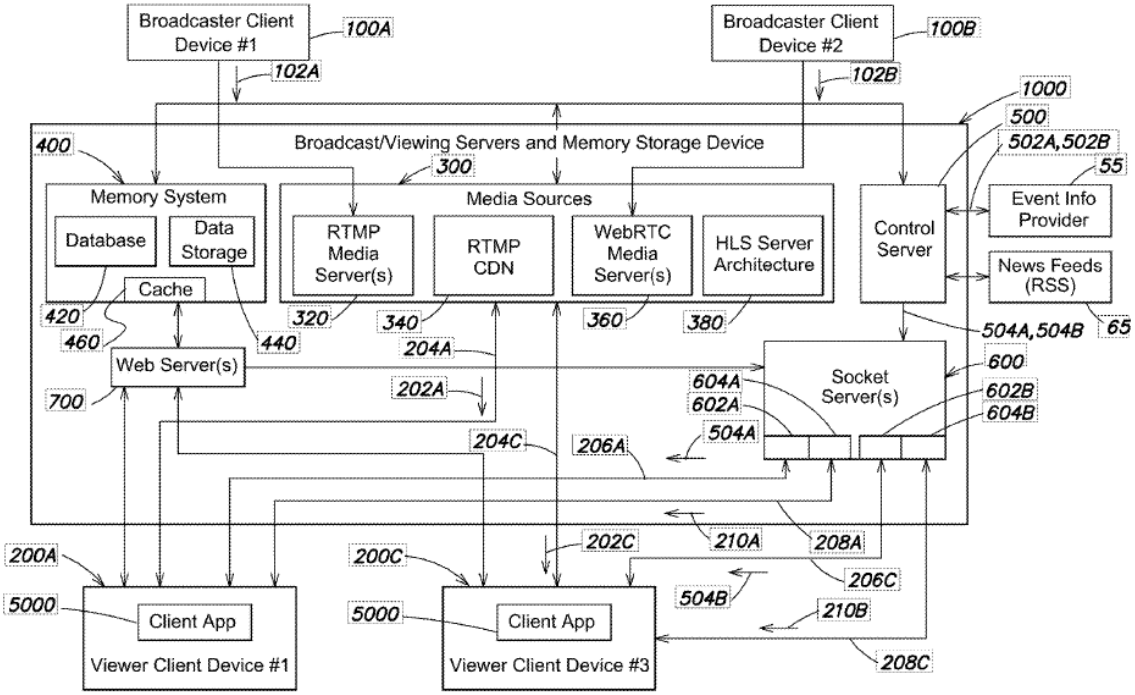

FIG. 2

Figure 2 is a block diagram of broadcast/viewing servers and memory storage devices 1000 in the system of Figure 1A. Ex. 1003, 11:26–28, 18:36–44. Servers/memory storage devices 1000 include, in relevant part, a plurality of media sources 300, control server 500, one or more web servers 700, and socket server 600. *Id.* at 18:55–62, 19:17–20:15. Media sources

300 receive live streams of digital content (102A, 102B) from broadcaster client devices (100A, 100B) and provide copies (202A, 202C) to viewer client devices (200A, 200C). *Id.* at 19:17–23. Web server 700 supports an application programming interface to facilitate communication between servers/memory storage devices 1000 and client devices. *Id.* at 18:55–62. Control server 500 retrieves news and/or event information germane to the live streams of digital content (102A, 202C) from news feeds 65 and event information provider 55. *Id.* at 19:51–55. Socket servers 600 facilitate communication of synchronized event information retrieved by control server 500 to broadcaster and viewer client devices. *Id.* at 20:10–15. For example, control server 500 may retrieve first score information 504A for a first live sporting event and provide it to socket server 600, which establishes event socket 602A. *Id.* at 21:47–62. First viewer client device 200A connects to event socket 602A via a URL, and first score information 504A is transmitted to first viewer client device 200A. *Id.* at 22:2–16.

The application that led to the ’687 patent was filed on September 24, 2019, and claims priority via continuation applications to a PCT patent application filed on August 7, 2017. Ex. 1003, codes (22), (63). The application that led to the ’687 patent also claims priority to, *inter alia*, a provisional application filed on August 5, 2016. *Id.*, code (60). Petitioner contends the asserted references “qualif[y] as prior art under 35 U.S.C. §102 regardless of whether the ’687 [patent] is entitled to its earliest provisional filing date.” Pet. 5 n.3. Accordingly, we apply the August 7, 2017, PCT patent application date (“effective filing date”) for determining whether the asserted references qualify as prior art.

D. Illustrative Claim

Of the challenged claims, claim 1 is independent. Claims 2–9 depend directly or indirectly from claim 1. Claim 1 is illustrative of the challenged claims and recites:

> 1. [1.0] A system for providing, to a first plurality of viewer client devices, a first plurality of copies of a first live stream of digital content relating to a first live sporting event, and for providing, to a second plurality of viewer client devices, a second plurality of copies of a second live stream of digital content relating to the first live sporting event or a second live sporting event, the system comprising:
>
> [1.1] A) a plurality of media sources to:
>
> [1.2] receive the first live stream of digital content and the second live stream of digital content;
>
> [1.3] provide a first copy of the first plurality of copies to a first viewer client device of the first plurality of viewer client devices via a first video Internet communication channel between the plurality of media sources and the first viewer client device of the first plurality of viewer client devices; and
>
> [1.4] provide a first copy of the second plurality of copies to a first viewer client device of the second plurality of viewer client devices via a second video Internet communication channel between the plurality of media sources and the first viewer client device of the second plurality of viewer client devices;
>
> [1.5] B) a control server to periodically retrieve, via the Internet, first event information germane to the first live sporting event; and
>
> [1.6] C) at least one socket server communicatively coupled to the control server to:
>
> [1.7] receive from the control server at least the first event information; and

> [1.8] transmit the first event information to at least the first viewer client device of the first plurality of viewer client devices via a first event information Internet communication channel between at least one first event socket of the at least one socket server and the first viewer client device of the first plurality of viewer devices, wherein the at least one first event socket corresponds to the first event information germane to the first live sporting event.

Ex. 1001, 56:46–57:16 (Petitioner's identifiers added in brackets).

E. Prior Art

Petitioner relies on the following prior art:

U.S. Patent Application Publication No. 2015/0163379 A1, filed Dec. 11, 2013, published June 11, 2015 (Ex. 1015, "Herzog");

U.S. Patent Application Publication No. 2014/0229992 A1, filed Apr. 22, 2014, published Aug. 14, 2014 (Ex. 1016, "Ellis"); and

U.S. Patent Application Publication No. 2016/0036910 A1, filed Aug. 4, 2014, published Feb. 4, 2016 (Ex. 1017, "Spivey").

F. The Asserted Grounds

Petitioner challenges claims 1–9 of the '687 patent based on the following grounds (Pet. 6):

Claims Challenged	35 U.S.C. §	References
1, 8, 9	103[2]	Ellis, Spivey

[2] The Leahy-Smith America Invents Act ("AIA"), Pub. L. No. 112-29, 125 Stat. 284, 287–88 (2011), amended 35 U.S.C. §§ 102 and 103. Because the '687 patent's earliest claim of priority is made to an application filed after

Claims Challenged	35 U.S.C. §	References
2–7	103	Ellis, Spivey, Herzog
1–9	103	Herzog, Ellis, Spivey

II. ANALYSIS

We now consider Petitioner's asserted grounds and Patent Owner's arguments to determine whether Petitioner has met the "reasonable likelihood" standard for institution under 35 U.S.C. § 314(a).

A. Legal Standards

A claim is unpatentable under 35 U.S.C. § 103 if the differences between the claimed invention and the prior art are such that the claimed invention, as a whole, would have been obvious before the effective filing date of the claimed invention to a person having ordinary skill in the art to which the claimed invention pertains. *See KSR Int'l Co. v. Teleflex Inc.*, 550 U.S. 398, 406 (2007). The question of obviousness is resolved on the basis of underlying factual determinations, including (1) the scope and content of the prior art; (2) any differences between the claimed subject matter and the prior art; (3) the level of skill in the art; and (4) where in evidence, so-called secondary considerations. *See Graham v. John Deere Co.*, 383 U.S. 1, 17–18 (1966). We also recognize that prior art references must be "considered together with the knowledge of one of ordinary skill in the pertinent art." *In re Paulsen*, 30 F.3d 1475, 1480 (Fed. Cir. 1994) (citing *In re Samour*, 571 F.2d 559, 562 (CCPA 1978)).

March 16, 2013 (the effective date of the relevant amendments), the AIA versions of §§ 102 and 103 apply. *See* Ex. 1003, codes (60), (63).

B. Level of Ordinary Skill in the Art

Citing testimony from Dr. Wicker, Petitioner contends a person of ordinary skill in the art "would have had at least a bachelor's degree, or equivalent, in electrical engineering, computer engineering, computer science, or a related field or an equivalent number of years of working experience, and one to two years of experience in networking environments, including at least some experience with live-streaming network architecture." Pet. 13 (citing Ex. 1001 ¶¶ 72–76). Patent Owner cites testimony from Dr. Rubin and contends that an ordinarily skilled artisan "would have [had] a bachelor's degree in electrical engineering, computer engineering, computer science, or equivalent degree and, in addition, approximately two years of work experience with Internet video streaming, Internet communication, and related protocols." Prelim. Resp. 8 (citing Ex. 2001 ¶ 99).

The differences between the parties' definitions are minor, as recognized by Dr. Rubin (*see* Ex. 2001 ¶ 101), and we do not discern any meaningful differences based on the preliminary record. Accordingly, for purposes of this Decision, we adopt Patent Owner's definition of the level of ordinary skill in the art. On the present record, we are satisfied that this definition of the level of skill is consistent with the teachings of the '687 patent and the asserted prior art. Notwithstanding, we would reach the same determination under Petitioner's formulation of the level of skill.

C. Claim Interpretation

In an *inter partes* review, we construe each claim

> using the same claim construction standard that would be used to construe the claim in a civil action under 35 U.S.C.

> [§] 282(b), including construing the claim in accordance with the ordinary and customary meaning of such claim as understood by one of ordinary skill in the art and the prosecution history pertaining to the patent.

37 C.F.R. § 42.100(b). Accordingly, our claim construction standard is the same as that of a district court. *See id.* Under the standard applied by district courts, claim terms are generally given their plain and ordinary meaning, as would have been understood by a person of ordinary skill in the art at the time of the invention and in the context of the entire patent disclosure. *Phillips v. AWH Corp.*, 415 F.3d 1303, 1313 (Fed. Cir. 2005) (en banc). "There are only two exceptions to this general rule: 1) when a patentee sets out a definition and acts as his own lexicographer, or 2) when the patentee disavows the full scope of a claim term either in the specification or during prosecution." *Thorner v. Sony Comput. Entm't Am. LLC*, 669 F.3d 1362, 1365 (Fed. Cir. 2012).

Petitioner contends that all claim terms should be given their plain and ordinary meaning. Pet. 6. Petitioner also argues that an ordinarily skilled artisan would have known that a "socket" is "a uniquely addressable communication endpoint on a server where first event information is provided to a VCD [viewer client device]." *Id.* at 37 (citing Ex. 1001 ¶ 352). Thus, Petitioner argues that an "event socket" is "a socket where information about one sporting event is provided to a VCD." *Id.* Patent Owner states that "[e]xcept for the 'event socket' term for which Patent Owner applies Petitioner's construction . . . for purposes of [its] preliminary response, Patent Owner agrees that no terms require construction and construes all other terms consistent with their plain and ordinary meaning." Prelim. Resp. 8.

For purposes of this Decision, we apply Petitioner's construction of "socket" and "event socket." We determine that no other aspects of the challenged claims require explicit construction. *See, e.g.*, *Realtime Data, LLC v. Iancu*, 912 F.3d 1368, 1375 (Fed. Cir. 2019) ("The Board is required to construe 'only those terms . . . that are in controversy, and only to the extent necessary to resolve the controversy.'" (quoting *Vivid Techs., Inc. v. Am. Sci. & Eng'g, Inc.*, 200 F.3d 795, 803 (Fed. Cir. 1999))).

D. Obviousness Ground Based on Ellis and Spivey

Petitioner contends that claims 1, 8, and 9 would have been obvious over the combination of Ellis and Spivey. Pet. 17–52. Patent Owner disputes Petitioner's contentions. Prelim. Resp. 21–45, 61–71.

1. Ellis

Ellis is a U.S. patent application publication titled "Systems and Methods for Providing Enhanced Sports Watching Media Guidance" that discloses systems and methods for accessing and displaying enhanced sports-related media content. Ex. 1016, codes (54), (57). Figure 1 of Ellis is reproduced below.

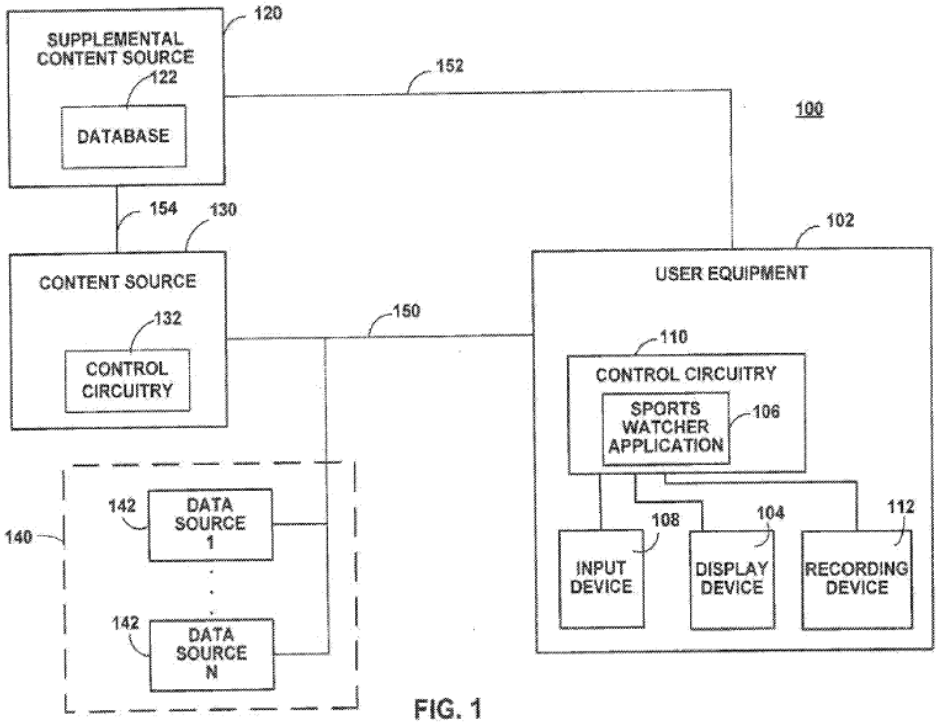

FIG. 1

Figure 1 is a block diagram illustrating interactive media system 100. *Id.* ¶¶ 15, 39. Interactive media system 100 including user equipment 102, content source 130, supplemental content source 120, and data sources 140. *Id.* ¶ 39. User equipment device 102 receives media content, such as video broadcast programming, from content source 130 via communication path 150. *Id.* ¶¶ 39–40, Fig. 1. User equipment device 102 also receives content, such as real-time sports scores and game summary information, from supplemental content source 120 via communication path 152. *Id.* ¶¶ 39, 41, Fig. 1. Data sources 140 provide data for applications running on user equipment 102. *Id.* ¶ 46.

Petitioner notes that Ellis was published on August 14, 2014, and contends that Ellis qualifies as prior art under 35 U.S.C. § 102(a). Pet. 5. Patent Owner does not dispute the prior art status of Ellis at this juncture. For purposes of this Decision, we determine that Ellis qualifies as prior art

under 35 U.S.C. § 102(a) because Ellis's publication date of August 14, 2014, is before the effective filing date of the challenged claims, which is August 7, 2017. Ex. 1003, code (63); Ex. 1016, code (43).

2. Spivey

Spivey is a U.S. patent application publication titled "Techniques to Broadcast Live Event Data in Real-Time" that discloses a system for broadcasting live event data in real-time. Ex. 1017, codes (54), (57). According to Spivey, its techniques "increase the speed at which live event data (e.g. sports scores and breaking news), are broadcast to mobile devices by using topic queues and open duplex communication connections, among other innovative techniques." *Id.* ¶ 27. Figure 1 of Spivey is reproduced below.

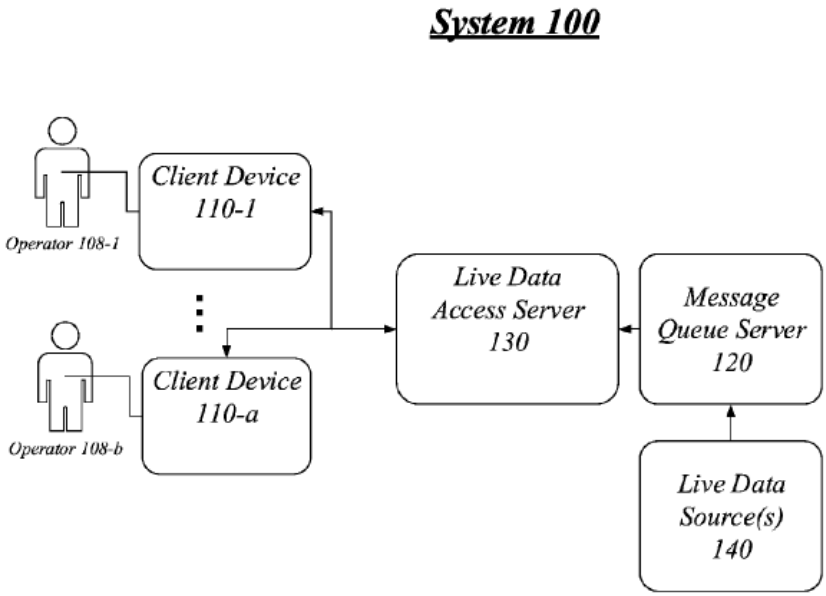

FIG. 1

Figure 1 shows system 100 for broadcasting live event data including client devices 110-1 through 110-a, message queue server 120, and live data access

server 130 coupled via one or more networks. *Id.* ¶¶ 3, 34. Message queue server 120 receives live data from live data source(s) 140 and processes the live data so that it can be provided to client devices 110-1 through 110-a. *Id.* ¶¶ 35–37. Live data access server 130 interfaces between message queue server 120 and client devices 110-1 and 110-a. *Id.* ¶ 38.

Figure 4 of Spivey is reproduced below.

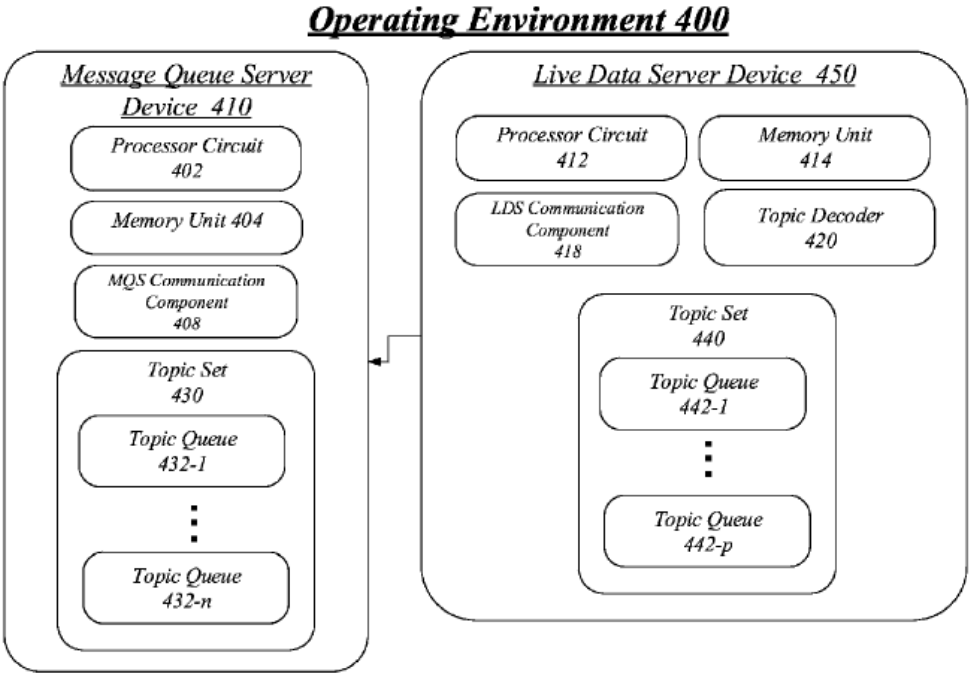

FIG. 4

Figure 4 shows operating environment 400, in which message queue server 120 is implemented as message queue server device 410 and live data server device 450. Ex. 1017 ¶¶ 6, 53. Message queue server device 410 includes communication component 408, topic set 430, and topic queues 432. *Id.* ¶ 54. Live data server device 450 includes live data server communication component 418 that allows live data server device 450 to receive live data and transmit it to message queue server device 410. *Id.* ¶ 55. Live data server device 450 also includes topic decoder 420, topic set 440, and topic queues 442. *Id.* ¶ 56.

Petitioner notes that Spivey was published on February 4, 2016, and contends that Spivey qualifies as prior art under 35 U.S.C. § 102(a). Pet. 6. Patent Owner does not dispute the prior art status of Spivey at this juncture. For purposes of this Decision, we determine that Spivey qualifies as prior art under 35 U.S.C. § 102(a) because Spivey's publication date of February 4, 2016, is before the effective filing date of the challenged claims, which is August 7, 2017. Ex. 1003, code (63); Ex. 1017, code (43).

3. Claim 1

a. Rationale for the Combination

Petitioner notes Spivey's teaching that "some live-event data delivery systems, such as Ellis's, suffer from latency issues." Pet. 18 (citing Ex. 1001 ¶¶ 107–108); *see also* Ex. 1001 ¶¶ 95, 107 (citing Ex. 1017 ¶¶ 27–28) (discussing Spivey's disclosures about the problem of latency for live event data). Petitioner further notes Spivey's teaching that a live data server device (LDSD) and message queue server device (MQSD) "could provide live-event data to any number of customers in milliseconds." Pet. 18 (citing Ex. 1001 ¶ 109; Ex. 1017 ¶¶ 27–28). Thus, Petitioner contends that an ordinarily skilled artisan "would have implemented Spivey into Ellis's current data delivery system by replacing Ellis's SCS with Spivey's LDSD and adding the MQSD to achieve a predictable result of decreased latency data delivery using a websocket connection in lieu of HTTPS." Pet. 19 (citing Ex. 1001 ¶¶ 109–111; Ex. 1016 ¶¶ 39, 41, Fig. 1; Ex. 1017, Fig. 4).

Petitioner provides the following illustration of its conception of the combined system.

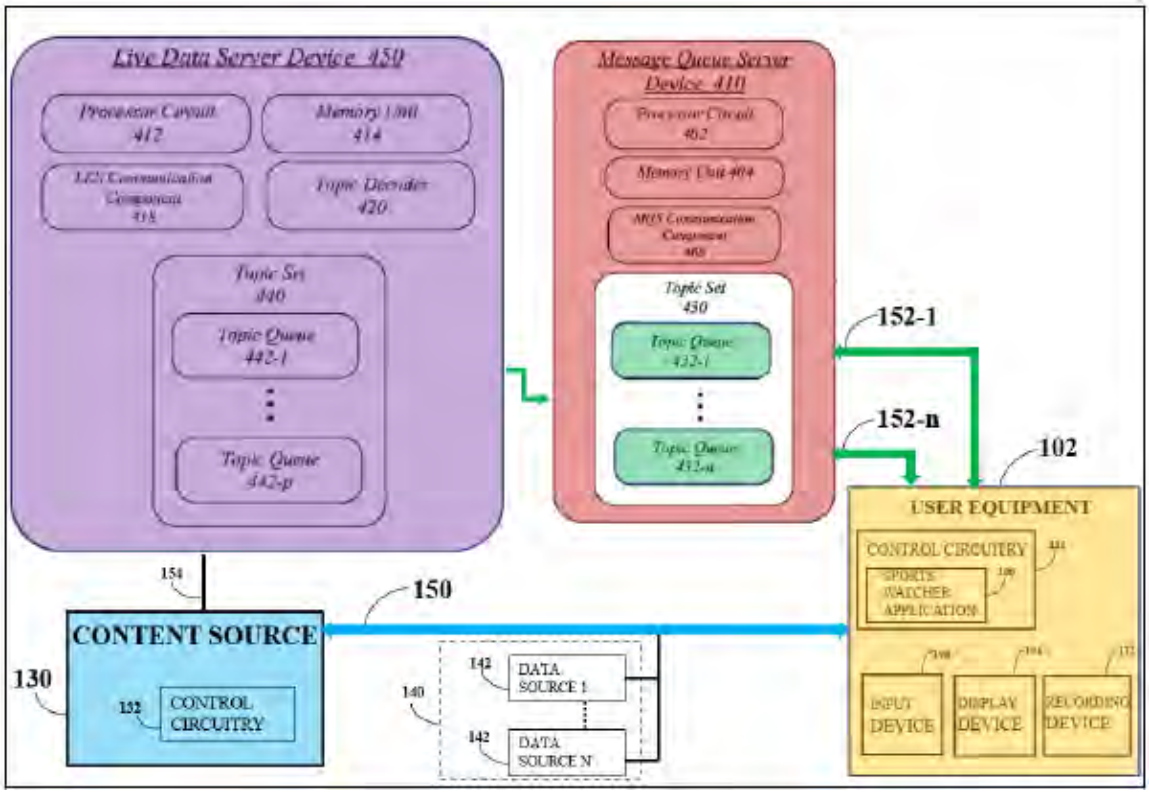

Pet. 19–20. In this illustration from the Petition, Petitioner has modified Ellis's Figure 1 such that Spivey's live data server device 450 and message queue server device 410 from Spivey's Figure 4 replace supplemental content source 120 in Ellis's Figure 1. *Id.* (citing Ex. 1001 ¶ 111; Ex. 1016, Fig. 1; Ex. 1017, Fig. 4). According to Petitioner, the modification "would maintain Ellis's video content delivery system and upgrade the data delivery system to reduce latency." *Id.* at 20 (citing Ex. 1001 ¶ 111).

Petitioner contends an ordinarily skilled artisan would have combined Ellis and Spivey because they both are related to "content delivery for real-time events" and both "solve the same or similar problems, namely, quickly providing video and/or event data to multiple users over the Internet." Pet. 20 (citing Ex. 1001 ¶¶ 112–114; Ex. 1016 ¶¶ 39–40, 156, 176; Ex. 1017,

code (57), ¶ 27). Petitioner further contends that Spivey complements Ellis insofar as Spivey provides "details of the backend architecture for transmitting event data to multiple users." *Id.* at 21 (citing Ex. 1001 ¶ 115; Ex. 1017, code (57)). Petitioner additionally contends that "[i]mplementing certain portions of Spivey's system into Ellis's system would have been obvious because doing so would have required only the simple substitution of known elements for another to obtain predictable results." *Id.* (citing Ex. 1001 ¶ 114).

Patent Owner argues that Petitioner's proposed combination is inoperable because it removes Ellis's source of the supplemental content data (i.e., supplemental content source 120 and database 122) and "thereby eliminates the very functionality—data delivery—Petitioner proposes to upgrade." Prelim. Resp. 24 (citing Ex. 1016 ¶¶ 41–43; Ex. 2001 ¶¶ 191–193). Patent Owner also argues that Petitioner's proposed combination is inoperable because Spivey "fails to address video delivery" and "how immediately pushed data could somehow be throttled or gated in a manner to synchronize with any associated television programming." *Id.* at 23 (citing Ex. 2001 ¶¶ 197–198).

In addition, Patent Owner disputes Petitioner's rationale for combining Spivey with Ellis. Specifically, Patent Owner argues that "Petitioner manufactures a data latency problem in Ellis, without any explanation as to why a[n ordinarily skilled artisan] would understand one to exist." Prelim. Resp. 26 (citing Ex. 2001 ¶ 211). Patent Owner also criticizes Petitioner's rationale as cursory to the extent it is based on Ellis's and Spivey's alleged common teachings of "content delivery for real time events." *Id.* at 27 (citing Pet. 20). Further, contrary to Petitioner's

assertions, Patent Owner also disputes that Ellis and Spivey solve the similar problem of "quickly providing video and/or event data to multiple users over the Internet." *Id.* (citing Pet. 20). Patent Owner further disputes that Ellis and Spivey "disclose complementary means of achieving the common goal of synchronizing multiple forms of data, including video/audio and event data." Prelim. Resp. 28 (citing Pet. 20). Patent Owner additionally argues that the fact that Spivey might provide a complementary solution for Ellis's backend architecture would not have been obvious unless the results are predictable, and Petitioner has not established as much. *Id.* at 29–30. Patent Owner further argues that an ordinarily skilled artisan would not have had a reasonable expectation of success because of "the fundamental incompatibility of Spivey's immediate 'push' data delivery and Ellis's video delivery," which allegedly "would have decreased performance." *Id.* at 30 (citing Ex. 2001 ¶¶ 197–199).

Patent Owner also argues that Petitioner has engaged in impermissible hindsight when combining Spivey with Ellis. Prelim. Resp. 30–34. In particular, Patent Owner argues that, "absent reference to the blueprint of claim 1 of the '687 patent," an ordinarily skilled artisan "would not have been prompted to remove both of Ellis's supplemental content *source* and *database* and replace those components with a multi-component messaging architecture cherry-picked from an alternative embodiment of Spivey." *Id.* at 31 (citing Ex. 2001 ¶¶ 210–213). Patent Owner also argues that Ellis at most teaches synchronization of broadcast and other event information to a single viewer, whereas the '687 patent is directed to synchronization across multiple client devices. *Id.* at 33–34 (citing Ex. 1016 ¶ 70). As such, Patent Owner argues an ordinarily skilled artisan "would not [have] attempt[ed] to

implement Spivey's messaging queue architecture in Ellis" without engaging in hindsight. *Id.* at 33 (citing Ex. 2001 ¶¶ 217–219).

For the reasons given below, we find that Petitioner's arguments are supported sufficiently by the evidence in the preliminary record before us at this early juncture, and that Patent Owner's arguments do not undermine Petitioner's showing. For example, we are persuaded preliminarily that Petitioner's proposed combination would have improved latency issues in Ellis's system. *See* Pet. 17–21; Ex. 1001 ¶¶ 106–115. This is supported by Spivey's disclosure that its techniques "may reduce . . . delay [on the order of seconds (e.g., 30 to 45 seconds) or minutes] to an order of milliseconds (ms) (e.g., 100 ms) or less, providing a significant advantage over the conventional practices." Ex. 1017 ¶ 28. Spivey also discloses pushing data "to the subscribed connected client devices substantially simultaneously with the message queue server receiving the topic entry from a live data source, e.g., with a time delay of 100 milliseconds or less," which Spivey discloses is "at least two orders of magnitude shorter than conventional time periods of legacy devices." *Id.* ¶ 96; *see also id.* at code (57) (disclosing pushing "the topic entry to a subscribed client device substantially simultaneously with the message queue server receiving the topic entry from a live data source").

We disagree with Patent Owner (Prelim. Resp. 26) that "Petitioner manufactures a data latency problem in Ellis, without any explanation as to why a[n ordinarily skilled artisan] would understand one to exist." The portion of Spivey cited by Petitioner describes that its techniques reduce latency, thus "providing a significant advantage over the conventional practices." Ex. 1017 ¶ 28; *see also id.* ¶ 96 (describing improvements of "at

least two orders of magnitude" as compared to "conventional time periods of legacy devices"). This teaching shows sufficiently, for purposes of institution, that artisans in the field would have known to consider the problem of latency in delivering live data. Moreover, Patent Owner's argument that Ellis pertains to "viewing and tuning" and Spivey is not relevant to "how sports viewers commonly watch and interact with displayed sporting events" (Prelim. Resp. 26–28), as well as Dr. Rubin's related testimony (Ex. 2001 ¶¶ 171, 190, 215–216), are based on only a subset of the teachings of both references, rather than the teachings of the references in their entirety. For example, Ellis describes providing real-time data such as sports scores (*see, e.g.*, Ex. 1016 ¶ 41), and Spivey describes that its live data feeds are generated by computing devices associated with a live event (Ex. 1017 ¶ 37). We are mindful that the teachings of the references must be considered as a whole, from the perspective of an ordinarily skilled artisan. *See Sundance, Inc. v. DeMonte Fabricating Ltd.*, 550 F.3d 1356, 1361 n.3 (Fed. Cir. 2008) ("What a prior art reference discloses or teaches is determined from the perspective of one of ordinary skill in the art."); *In re Hedges*, 783 F.2d 1038, 1041 (Fed. Cir. 1986) (noting that when evaluating claims for obviousness, "the prior art as a whole must be considered").

Furthermore, Ellis and Spivey are complementary insofar as they both are directed to content delivery for real-time events to multiple users. *See, e.g.*, Ex. 1016, code (57) (describing "[s]ystems and methods for enhanced sports-related media content access and display"), ¶ 39 (describing that in system 100 "[u]ser equipment device 102 receives content . . . from content source 120 and/or supplemental content source 120 over communications

paths 150 and 152, respectively" and "[a]ny suitable number of users may have one or more user equipment devices, such as user equipment 102"), ¶ 40 (describing that "[c]ontent source 130 may be any suitable source of media content" such as the "Internet or network media/web server" and that "[m]edia content" includes "broadcast programming," "news," "newsgroups," and "chat rooms"), ¶ 41 (describing that "[s]upplemental content source 132 may be any suitable content source configured to provide real-time sports scores and game summary information . . . [and] sports commentary" as well as other "sports-related information" via "a plurality of real-time data feeds"); Ex. 1017, code (57) (describing "[a]n apparatus to broadcast live event data in real-time" that receives "a topic entry from a message queue server" and pushes "the topic entry to a subscribed client device substantially simultaneously with the message queue server receiving the topic entry from the live data source"), ¶ 27 (describing techniques for broadcasting "media content in real-time" and that the "media content may comprise, for example, data from a live event (e.g., news event, a gaming event, sporting event, etc.)" and that "live event data (e.g., sports scores and breaking news)" also is broadcasted), ¶ 34 (describing "system 100 for broadcasting live data in real-time" that includes "client devices 110-1 through 110-a"). Ellis and Spivey also both disclose that content is provided over the internet. For instance, Ellis describes that "[c]ontent source 130 and supplemental content source 120 may be configured to transmit signals to user equipment 102 over any suitable communication paths 150 and 152" (Ex. 1016 ¶ 45) and that, in certain embodiments, content is delivered "on a particular network address (e.g., multicast address) on which an IP socket is currently joined." Ex. 1016 ¶¶ 45, 74. Spivey additionally describes "[a]n

apparatus to broadcast live event data in real-time" that receives "a topic entry from a message queue server" and pushes "the topic entry to a subscribed client device substantially simultaneously with the message queue server receiving the topic entry from the live data source" and that the subscribed client device receives data over "a websocket connection." Ex. 1017, code (57), ¶¶ 43, 61, 74, 92. Based on the present record, these teachings appear to contradict Patent Owner's assertions (Prelim. Resp. 25–30) that the references are not complementary, or else that Petitioner did not adequately address differences between the references.

We also disagree with Patent Owner's argument (Prelim. Resp. 24–25) that Petitioner's proposed combination is inoperable because Petitioner's proposed combination removes the source of supplemental content, Ellis's database 122, and replaces it with "a database-less system of Spivey." In particular, Ellis describes database 122 as being optional: "sports-related information *may be* stored in database 122." Ex. 1016, Fig. 1, ¶ 42 (emphasis added). Thus, even if Petitioner's proposed combination lacked a database, we do not understand this to be a fatal flaw in the manner suggested by Patent Owner. Further, we note that Spivey discloses "data feeds" that are "generated by computing devices associated with a live event" and "data gathered by human observers of a live event and entered into an interface that communicates the gathered data." Ex. 1017 ¶ 37. Spivey also describes "broadcasting live data in real-time" (*id.* ¶ 34) and receiving "live data in the form of a topic entry," which may include "a score, a play, an error, an injury, a player-at-bat" when "the live event is a sporting event" (*id.* ¶¶ 47–48). These teachings from Spivey support that an

ordinarily skilled artisan would have known how to provide data to Petitioner's proposed system.

We further disagree with Patent Owner (Prelim. Resp. 23–24) that the proposed combination is inoperable because Spivey's teachings "are not tied to video delivery" and Petitioner does not address "how immediately pushed data could somehow be throttled or gated in a manner to synchronize with any associated television programming." Patent Owner's argument (*id.*) and Dr. Rubin's related testimony (Ex. 2001 ¶¶ 167–168, 197–198, 208) are not consistent with evidence that Spivey describes its teachings as associated with broadcasting a live event. For example, Spivey's system 100 broadcasts "live event data in real-time" and includes "a subscription component . . . to receive a topic entry from a message queue server, and to push the topic entry to a subscribed client device." Ex. 1017, code (57). Spivey also describes that its live data sources are "associated with a live event." *Id.* ¶ 37; *see also id.* ¶ 48 (describing that the topic entry "may include any media information about at least one of a live event (e.g., news, game, sport, activity, and so forth"). Additionally, the challenged claims do not recite that the first event information must be gated or synchronized with the first live sporting event, so this argument is not commensurate with the scope of the challenged claims.

Patent Owner's remaining arguments that Petitioner relies on impermissible hindsight bias to "reconstruct the invention" from "cherry-picked" prior art teachings (Prelim. Resp. 30–34) and Dr. Rubin's related testimony (Ex. 2001 ¶¶ 168–171, 210–213, 217–219) are premised on many of the same arguments we find unavailing at this stage. As discussed above, Petitioner's argument that its proposed combination would have been made

to improve latency issues in Ellis's system (Pet. 17–21) is supported by Spivey's disclosures. Spivey describes, for example, that "the data payload of the topic entry may be pushed to the subscribed connected client devices substantially simultaneously with the message queue server receiving the topic entry from a live data source, e.g., with a time delay of 100 milliseconds or less." Ex. 1017 ¶ 96. As shown in Figure 1 of Spivey, live data source(s) 140 is connected to client devices 110-1 through 110-a via message queue server 120 and live data access server 130. *Id.* at Fig. 1. Spivey describes that Figure 4 illustrates an embodiment of message queue server 120. *Id.* ¶ 53. Thus, based on the preliminary record, we find that Petitioner's proposed substitution of message queue server device 410 and live data server device 450 into Ellis is consistent with Petitioner's rationale to combine the teachings of Ellis and Spivey, which is to reduce latency.

Finally, for reasons similar to those mentioned above, we disagree with Patent Owner (Prelim. Resp. 21, 24, 26, 28, 30) that Petitioner fails to establish that an ordinarily skilled artisan reasonably would have expected success when combining Spivey with Ellis. We are persuaded preliminarily that the use of a websocket connection in Petitioner's combination predictably would have resulted in decreased latency. *See, e.g.*, Ex. 1001 ¶¶ 109–111. Petitioner also has shown sufficiently, for purposes of institution, that the combination represents the substitution of known elements for one another (i.e., substituting "Spivey's LDSD and MQSD" for "portions of Ellis's SCS"), which would yield predictable results. *See, e.g.*, *id.* ¶¶ 114–115.

Based on the preliminary record, we find that Petitioner provides a sufficient rationale for combining the teachings of Ellis and Spivey. We also

find that Petitioner has shown sufficiently for purposes of institution that a person of ordinary skill in the art would have had a reasonable expectation of success.

b. Preamble 1.0

The preamble of claim 1 recites

> [a] system for providing, to a first plurality of viewer client devices, a first plurality of copies of a first live stream of digital content relating to a first live sporting event, and for providing, to a second plurality of viewer client devices, a second plurality of copies of a second live stream of digital content relating to the first live sporting event or a second live sporting event.

Ex. 1003, 56:46–52. Petitioner cites Ellis's system for providing "enhanced information access and viewing functionality for sports-related programming" including "a sporting event, sports news, or sports commentary." Pet. 22 (citing Ex. 1016 ¶¶ 8, 11). Petitioner notes that Ellis's system provides individual copies of live broadcast programming at the same time to multiple users. *Id.* at 22–23 (citing Ex. 1016 ¶¶ 39, 40, 45, 62–63, Fig. 2B).

Patent Owner does not dispute Petitioner's analysis of the preamble at this time. Based on the present record, we are persuaded preliminarily that Ellis teaches the preamble.[3] *See, e.g.*, Ex. 1016 ¶¶ 8, 11, 39, 40, 45, 62–63, Fig. 2B.

[3] Because Petitioner shows sufficiently for purposes of institution that Ellis teaches the preamble, we need not determine whether the preamble is limiting. *See Realtime Data*, 912 F.3d at 1375.

c. Limitation 1.1

Claim 1 further recites "A) a plurality of media sources to" perform various steps. Ex. 1003, 56:53. Petitioner cites Ellis's teaching of "any suitable source of media content" such as an "Internet or network media/web server, or any other suitable facility or system for originating or distributing passive or interactive content to user equipment." Pet. 24 (citing Ex. 1016 ¶ 40). Petitioner further Ellis's teaching of numerous instances of content source 130 distributing video content to users over communication path 150. *Id.* at 24–25 (citing Ex. 1016 ¶¶ 39–41, Fig. 1).

At this juncture, Patent Owner does not dispute Petitioner's analysis of this limitation. Based on the present record, Petitioner has shown sufficiently that Ellis teaches a plurality of different sources of media content. *See, e.g.*, Ex. 1016 ¶¶ 39–41, Fig. 1.

d. Limitation 1.2

Claim 1 further recites that the plurality of media sources "receive the first live stream of digital content and the second live stream of digital content." Ex. 1001, 56:54–55. Petitioner again cites Ellis's teaching of using multiple streams of media content, including those from television broadcasts and media servers, and of allowing a user to watch more than one event. Pet. 25–26 (citing Ex. 1016 ¶¶ 40, 45, 61–62, 74).

At this juncture, Patent Owner does not dispute Petitioner's analysis. Based on the present record, we are persuaded preliminarily that Ellis teaches this limitation. *See, e.g.*, Ex. 1016 ¶¶ 40, 45, 61–62, 74.

e. Limitations 1.3 and 1.4

Claim 1 further recites that the plurality of media sources

> provide a first copy of the first plurality of copies to a first viewer client device of the first plurality of viewer client devices via a first video Internet communication channel between the plurality of media sources and the first viewer client device of the first plurality of viewer client devices; and
>
> provide a first copy of the second plurality of copies to a first viewer client device of the second plurality of viewer client devices via a second video Internet communication channel between the plurality of media sources and the first viewer client device of the second plurality of viewer client devices

Ex. 1003, 56:56–67. For the viewer client devices, Petitioner cites Ellis's teaching of an "'interactive media system' where 'any suitable number of users' may 'select any game from the listing' of 'available games' to 'watch the selected game.'" Pet. 26 (citing Ex. 1016 ¶¶ 39, 94). Petitioner notes that this may result in different groups of users watching different content. *Id.* (citing Ex. 1001 ¶ 340; Ex. 1016 ¶¶ 55, 61–62, 132, Fig. 2B). Petitioner also cites Ellis's teaching of an internet server providing a stream over any "suitable wired or wireless path," such as the internet. *Id.* at 27 (citing Ex. 1016 ¶¶ 39, 45). According to Petitioner, each user would receive an individual copy of the live stream of digital content over a unique internet connection between the content source and the user equipment. *Id.* at 27–28 (citing Ex. 1001 ¶¶ 342–343; Ex. 1016 ¶ 74).

At this juncture, Patent Owner does not dispute Petitioner's analysis. Based on the present record, we are persuaded preliminarily that Ellis teaches these limitations. *See, e.g.*, Ex. 1016 ¶¶ 39, 40, 45, 48, 55, 61, 62, 74, 94, 132, Fig. 2B.

f. Limitation 1.5

Claim 1 further recites "B) a control server to periodically retrieve, via the Internet, first event information germane to the first live sporting event." Ex. 1003, 57:1–3. For the "control server," Petitioner cites Ellis's supplemental content source, which "comprises one or more processors, memory devices, and communication interfaces." Pet. 28 (citing Ex. 1001 ¶ 345). Petitioner contends that the supplemental content source periodically retrieves "real-time sports scores and game summary information, . . . spread and wagering data, and any other sports-related information" because it provides this information to user equipment. *Id.* at 28–29 (quoting Ex. 1016 ¶ 41) (citing Ex. 1001 ¶ 345; Ex. 1016 ¶¶ 72, 117). Petitioner also contends that an ordinarily skilled artisan would have known that "this information is retrieved via the internet because that is how real-time data was transferred to users at the time of Ellis and Spivey—including score updates and wagering information." *Id.* at 29 (citing Ex. 1001 ¶ 345; Ex. 1016 ¶¶ 42, 142).

Petitioner further argues that, to the extent Ellis does not teach limitation 1.5, Spivey's live data server device (LDSD) teaches the recited "control server." Pet. 30–31 (citing Ex. 1017, Fig. 4). Petitioner contends that Spivey's LDSD "is a generic server comprising one or more processors, memory devices, and communication interfaces." *Id.* at 31 (citing Ex. 1001 ¶ 346; Ex. 1017, Fig. 4). According to Petitioner, "[t]he LDSD contains an LDS communication component that allows LDSD to receive live data and transmit the data payloads to MQS device 410" and the received data includes "sports scores and breaking news." *Id.* (internal quotation omitted) (citing Ex. 1017 ¶¶ 27, 48, 55, 66).

At this juncture, Patent Owner does not dispute Petitioner's analysis. We note that Petitioner's proposed combination does not incorporate Ellis's supplemental content source and, instead, replaces Ellis's supplemental content source with Spivey's live data server database and message queue server device. *See* Pet. 19–20. Thus, at this preliminary stage, we are not persuaded by Petitioner's contentions regarding Ellis's supplemental content source for teaching limitation 1.5 because, based on the current record, Petitioner has not shown sufficiently how Ellis's supplemental content source would be part of Petitioner's proposed combination. Notwithstanding, we are persuaded preliminarily that Spivey's live data server device teaches limitation 1.5. *See, e.g.*, Ex. 1017 ¶¶ 27, 48, 55, 66, Fig. 4.

g. Limitation 1.6

Claim 1 further recites "C) at least one socket server communicatively coupled to the control server." Ex. 1003, 57:4–5. Petitioner cites Spivey's message queue server device (MQSD) for teaching the recited "socket server." *See* Pet. 33–35. Petitioner contends Spivey's MQSD "is a generic server that contains processors, memory, and communication components" that "'receive[s]' and 'process[es] live data to provide live data' to 'the subscribed connected client devices substantially simultaneously.'" *Id.* at 33 (quoting Ex. 1017 ¶¶ 36, 96) (citing Ex. 1017 ¶¶ 35, 45, 53, 54, 165, Figs. 3, 4). Petitioner further contends that Spivey's MQSD is communicatively coupled to the LDSD (i.e., the "control server") through Spivey's MQS communication component and LDS communication component. *Id.* at 34 (citing Ex. 1017 ¶¶ 46, 54–55). Thus, according to Petitioner, Spivey's

MQSD receives live event data from the LDSD, which just "receive[d] live data." *Id.* at 33–34 (quoting Ex. 1017 ¶ 55) (citing Ex. 1017 ¶ 54, Fig. 4).

At this juncture, Patent Owner does not specifically dispute Petitioner's analysis for limitation 1.6.[4] Based on the present record, Petitioner has shown sufficiently that Spivey's MQSD teaches the recited "socket server." *See, e.g.*, Ex. 1017 ¶¶ 35–36, 45, 53, 54, 96, 165, Figs. 3, 4.

h. Limitation 1.7

Claim 1 further recites that that the socket server "receive[s] from the control server at least the first event information." Ex. 1003, 57:6–7. Continuing the same analysis from above, Petitioner contends that Spivey's LDSD (i.e., the "control server") "receive[s] live data and transmit[s] the data payloads" to the MQSD (i.e., the "socket server"). Pet. 35 (citing Ex. 1017 ¶ 55). Petitioner further cites Spivey's teaching that data payloads may include "a score, a player name, a play, and so forth." *Id.* at 35–36 (quoting Ex. 1017 ¶ 117) (citing Ex. 1017, Fig. 10).

At this juncture, Patent Owner does not specifically dispute Petitioner's analysis for limitation 1.7.[5] Based on the present record, Petitioner has shown sufficiently that Spivey's MQSD (i.e., the "socket server") receives live event data (e.g., scores, player names) from the LDSD (i.e., the "control server"). *See, e.g.*, Ex. 1017 ¶¶ 55, 117.

---

[4] We note that Patent Owner disputes Petitioner's analysis of a related claim term, i.e., "event socket," for limitation 1.8. We discuss those arguments below. *See infra* § II.D.3.i.

[5] We note that Patent Owner disputes Petitioner's analysis of a related claim term, i.e., "event socket," for limitation 1.8. We discuss those arguments below. *See infra* § II.D.3.i.

i. Limitation 1.8

Claim 1 further recites that the socket server

> transmit[s] the first event information to at least the first viewer client device of the first plurality of viewer client devices via a first event information Internet communication channel between at least one first event socket of the at least one socket server and the first viewer client device of the first plurality of viewer devices, wherein the at least one first event socket corresponds to the first event information germane to the first live sporting event.

Ex. 1003, 57:8–16. Petitioner contends that an ordinarily skilled artisan "would have understood a 'socket' to be a uniquely addressable communication endpoint on a server where first event information is provided to a VCD [viewer client device]." Pet. 37 (citing Ex. 1001 ¶ 352). Petitioner interprets "at least one first event socket correspond[ing] to the first event information germane to the first live sporting event" as "a socket where information about one sporting event is provided to a VCD." *Id.* Thus, Petitioner maps the "event socket correspond[ing] to the first event information germane to the first live sporting event" to Spivey's topic queues in the LDSD "where data payloads are placed." Pet. 37 (quoting Ex. 1017 ¶¶ 51–52). Petitioner notes that each topic queue has a corresponding "topic label" (e.g., "gamecenter.nfl.ravenssteelers"), which identifies a topic queue and is used by a client device "to connect and subscribe to MQSD's topic queues." *See* Pet. 37–39 (citing Ex. 1017 ¶¶ 49, 66, 81–84, 96, Fig. 9).

As part of that analysis, Petitioner contends that "client devices 'request a live data connection' with the MQSD by 'select[ing] or enter[ing] the address or connection information to a particular' MQSD." Pet. 37 (quoting Ex. 1017 ¶¶ 81–82). Petitioner acknowledges that Spivey actually

mentions "a connection between the client device and the system using a live data access server ('LDAS')" rather than the MQSD, but Petitioner cites certain passages from Spivey and Dr. Wicker's testimony in support of its contention that Spivey's "message queue server device may be 'accessible to clients over the network directly.'" *Id.* at 37 n.6 (citing Ex. 1001 ¶ 354; Ex. 1017 ¶¶ 36, 38, 46, 84). Petitioner contends an ordinarily skilled artisan would have omitted the live data access server to "reduce latency, which is Spivey's main purpose." *Id.*

For "transmit[ting] the first event information to at least the first viewer client device of the first plurality of viewer client devices," Petitioner cites Spivey's teaching that the MQSD "may push data from topic queues . . . to the subscribers of the topics corresponding to those topic queues." Pet. 39 (quoting Ex. 1017 ¶ 46). Petitioner also cites Ellis's teaching that the supplemental content source may be configured "to provide real-time sports scores and game summary information . . . to user equipment 102." *Id.* (quoting Ex. 1016 ¶ 41).

For "transmit[ting] . . . via a first event information Internet communication channel between at least one first event socket of the at least one socket server and the first viewer client device of the first plurality of viewer devices," Petitioner cites Spivey's teaching of sending "live event data in real-time." Pet. 39 (quoting Ex. 1017, code (57)). Petitioner notes that Spivey's MQSD may be an internet server that communicates over the internet. *Id.* (citing Ex. 1017 ¶¶ 35, 179). Petitioner further cites Spivey's teaching that client devices "may request and participate in a websocket connection," which "typically comprises a two-way connection between two entities." *Id.* at 40 (quoting Ex. 1017 ¶¶ 43, 61). Petitioner also cites Ellis's

teaching of "providing event information over a separate communication path 152 than the video signal 150." *Id.* (quoting Ex. 1016 ¶¶ 39–41, Fig. 1).

Patent Owner disputes that the combination teaches the recited "event socket." Prelim. Resp. 34–44. First, Patent Owner argues that Spivey does not disclose a websocket connection between its message queue server and client devices. *Id.* at 35 (citing Ex. 1017 ¶¶ 43, 61; Ex. 2001 ¶¶ 223, 225–226). Instead, according to Patent Owner, Spivey discloses a websocket connection between a live data access server—which Petitioner has omitted from the combination—and client devices. *Id.* (citing Pet. 19, 37 & n.6; Ex. 1017 ¶¶ 43, 61, 74; Ex. 2001 ¶¶ 227–229).

Based on the present record, we do not agree with Patent Owner's arguments. Spivey teaches that clients "may request and participate in a websocket connection," i.e., "a two-way connection between two entities." Ex. 1017 ¶¶ 43, 61. Notwithstanding, the parties' declarants offer competing testimony as to whether Spivey teaches a websocket connection between Spivey's message queue server device and the client devices. *See* Ex. 1001 ¶ 354 & n.9; Ex. 2001 ¶¶ 223, 227–230. The relevant issue is whether Spivey requires an intermediary live access data server. Although we agree with Patent Owner that certain embodiments of Spivey depict a live data access server connected to client devices (*see, e.g.*, Ex. 1017, Fig. 1), we also find that Spivey teaches or at least suggests a direct connection between the message queue server device and client devices without an intermediary live data access server.

We agree with Petitioner (Pet. 37 n.6) that Spivey suggests the intermediary live data access server is optional. Specifically, Spivey

discloses that "system 100 *may* include a live data access server 130." Ex. 1017 ¶ 38 (emphasis added). Spivey also teaches that MQS communication component 308, which is included in message queue server device 310, "may . . . receive requests to subscribe to topics in a topic set 330, and may push data from topic queues 332-1, 332-n *to the subscribers of the topics corresponding to those topic queues*." *Id.* ¶ 46 (emphasis added). We also have considered Patent Owner's argument that "it is unclear how Spivey's message queue server device 410, which lacks an interface through which it could communicate with client devices, could include the claimed event socket." Prelim. Resp. 38. Yet Spivey discloses user interface 900 presented by live data app 210 residing on client device 200 that "allow[s] an operator 108 of a client device 110 to view and select topics of live data to subscribe to," which may comprise, for example, "the topics available from a message queue server." Ex. 1017 ¶ 84, Figs. 2, 9. Taken together, these passages better support Petitioner's and Dr. Wicker's assertions at this stage that Spivey at least suggests a direct connection between the message queue server device and client devices. Pet. 37 n.6; Ex. 1001 ¶ 354. We also credit preliminarily Petitioner's reason to omit the live data access server, which is to reduce latency consistent with Spivey's purpose. *Id.*

Patent Owner also argues that "Petitioner fails to show that Spivey's topic queues are '*event sockets*' under Petitioner's (and its [declarant's]) implied definition, which requires them to be 'uniquely addressable communication endpoint[s].'" *Id.* at 38–39; *see also* Pet. 37 (citing Ex. 1001 ¶ 352) (discussing a "uniquely addressable communication endpoint"). Rather, Patent Owner argues that Spivey's topic queues "are internal to its

MQS [message queue server]" and "lack any address at all through which they communicate." Prelim. Resp. 39–40 (citing Ex. 2001 ¶¶ 235–240).

As discussed above, we apply Petitioner's construction of "socket" and "event socket" for purposes of this Decision. *See supra* § II.C. We have considered Patent Owner's argument that "Spivey's 'topic queue' is merely an organization of data, such as a database table, that includes information about a particular topic" and not a communication endpoint. Prelim. Resp. 40–41. Dr. Rubin likewise testifies that a person of ordinary skill in the art "would not consider such a database, message queue, or any other internal data structure by themselves to be a 'uniquely addressable communication endpoints'" and that "[t]he only potential 'communication endpoint' Spivey discloses as being 'uniquely addressable' is the live data access server." Ex. 2001 ¶¶ 236–237. In contrast, Dr. Wicker testifies as follows:

> [I]t is my opinion that this information is provided via a connection between a topic queue and the first user equipment device. Users can access the MQSD using a URL. *See* Ex.1017 ¶¶81-82. Then, the user can access the specific topic queue she wishes to receive information from by using a text string, e.g., a topic label or Event ID, associated with a topic queue. *Id.* ¶179, Fig. 9 ("Gamecenter.nfl.ravenssteelers"). Thus, it is my opinion that a[n ordinarily skilled artisan] would have understood that Ellis in view of Spivey discloses distributing event information from a socket to a user device over an internet connection. Further, I believe a[n ordinarily skilled artisan] would have understood that the internet connection is established using a URL and text string identifying a uniquely addressable communication endpoint on the MQSD, where first event information is transmitted to a VCD.

Ex. 1001 ¶ 567.

Based on the preliminary record, we find that Petitioner's arguments and Dr. Wicker's testimony are supported by Spivey's disclosures that an "address may resemble a uniform resource locator (URL)" and user interface 900 that "allow[s] an operator 108 of a client device to view and select . . . topics available from a message queue server." Ex. 1017 ¶¶ 82, 84, Fig. 9. On the other hand, we find that Dr. Rubin's testimony is limited to addressing live data access server 130 and does not address sufficiently Spivey's teachings as a whole when understood from the perspective of an ordinarily skilled artisan. *See Sundance*,550 F.3d at 1361 n.3 ("What a prior art reference discloses or teaches is determined from the perspective of one of ordinary skill in the art."); *Hedges*, 783 F.2d at 1041 (noting that when evaluating claims for obviousness, "the prior art as a whole must be considered"). Therefore, we give Dr. Rubin's testimony less weight than Dr. Wicker's testimony at this preliminary stage. Accordingly, we are persuaded preliminarily by Petitioner's contention that the recited "event socket" is taught by Spivey's disclosures of a websocket connection and of data payloads placed on Spivey's topic queues that "relate to a specific game between two NFL teams" and include "for example, a score, a play, . . . , and so forth." *See, e.g.*, Ex. 1017 ¶¶ 43, 48–49, 51–52, 61, 66, Fig. 9.

For these reasons, Petitioner has shown sufficiently that the combination of Ellis and Spivey teaches limitation 1.8.

j. Secondary Considerations of Nonobviousness

Patent Owner asserts that objective indicia of nonobviousness support its position that Petitioner has not shown a reasonable likelihood of unpatentability of the challenged claims. *See* Prelim. Resp. 61–71.

Specifically, Patent Owner asserts long-felt need, industry praise, copying, and commercial success support Patent Owner's position.

To accord substantial weight to objective evidence of nonobviousness, the evidence must have a nexus to the claims. *Fox Factory, Inc. v. SRAM, LLC*, 944 F.3d 1366, 1373 (Fed. Cir. 2019). "A showing of nexus can be made in two ways: (1) via a presumption of nexus, or (2) via a showing that the evidence is a direct result of the unique characteristics of the claimed invention." *Volvo Penta of the Americas, LLC v. Brunswick Corp.*, 81 F.4th 1202, 1210 (Fed. Cir. 2023). A patentee is entitled to a presumption of nexus "when the patentee shows that the asserted objective evidence is tied to a specific product and that product 'embodies the claimed features, and is coextensive with them.'" *Fox Factory*, 944 F.3d at 1373 (quoting *Polaris Indus., Inc. v. Arctic Cat, Inc.*, 882 F.3d 1056, 1072 (Fed. Cir. 2018)). As discussed below, Patent Owner has not established a sufficient nexus between the challenged claims and Patent Owner's asserted objective indicia of nonobviousness. We also identify certain other deficiencies in Patent Owner's evidence.

Patent Owner does not attempt to show that a particular product embodies and is coextensive with the claimed features, so Patent Owner is not entitled to a presumption of nexus. *See Fox Factory*, 944 F.3d at 1373. And, to the extent Patent Owner attempts to address direct nexus, we find Patent Owner's remaining arguments to be conclusory and based on over-simplified characterizations of the claimed technology. *See, e.g.*, Prelim. Resp. 65 (stating without explanation that evidence of industry praise "result[s] directly from the claims—*i.e.*, the architecture discussed above (including a socket server and control server), as well as the system's ability

to "*provid[e] a first/second plurality of copies of a first/second live stream of digital content*" (*e.g.*, Claim 1)"), 71 (stating without explanation that evidence of industry praise was "a direct result of the claimed invention"). At this juncture, we accord little to no weight to Patent Owner's evidence of nexus between the proffered objective evidence and the claims of the '687 patent.

Although Patent Owner alleges copying, Patent Owner does not name a particular product of Petitioner's that allegedly copied Patent Owner's products. *See* Prelim. Resp. 66–67. Rather, Patent Owner merely cites to a 50-page infringement claim chart from the related parallel proceeding. *Id.* at 67 (citing Ex. 2001 ¶¶ 315–317; Ex. 2017). Patent Owner is reminded that "[a]rguments must not be incorporated by reference from one document into another document." 37 C.F.R. § 42.6(a)(3). At this stage, we decline to "play archeologist with the record" in order to understand Patent Owner's arguments, which "is precisely what the rule against incorporation by reference was intended to prevent." *Gen. Access Sols., Ltd. v. Sprint Spectrum L.P.*, 811 F. App'x 654, 657–58 (Fed. Cir. 2020). Further, Dr. Rubin merely cites the claim chart at Exhibit 2017 and states that he "understand[s] that Patent Owner contends that the Petitioner launched its own sport's [sic] streaming platform and incorporated the claimed invention into its own products." Ex. 2001 ¶ 316. He does not appear to have developed his own opinion regarding Petitioner's products. *Id.* For these reasons, and based on the present record, we accord Patent Owner's evidence of copying little to no weight.

Patent Owner's evidence also suffers from other deficiencies. For example, Patent Owner's evidence (Prelim. Resp. 62–64) does not establish

long felt and *unsolved* need. Dr. Rubin cites an article from 2015 describing "[b]roadcast latency [being] recognized by stream platforms around [the] mid-2010s" (Ex. 2001 ¶ 73 (citing Ex. 2034)), but the '687 patent claims priority to provisional applications filed in 2016 and 2017. Ex. 1003, code (60), 1:20–40. Moreover, certain of Patent Owner's industry praise evidence quotes former NBA commissioner David Stern (Prelim. Resp. 65), but he is described as "one of SportsCastr.Live's high-profile partners" and "a founding investor." Ex. 2006, 2; Ex. 2008. His interest in Patent Owner undermines that his views represent those of the "industry." Finally, Patent Owner acknowledges that commercial success is established by showing significant sales of the patented product, but Patent Owner does not cite any evidence of such significant sales. *See* Prelim. Resp. 67–71 (citing *Ormco Corp. v. Align Technology, Inc.*, 463 F.3d 1299, 1311–12 (Fed. Cir. 2006)).

For the above reasons, we accord Patent Owner's evidence of secondary considerations of nonobviousness little to no weight at this juncture.

k. Conclusion Regarding Claim 1

Petitioner has shown sufficiently at this juncture that the combination of Ellis and Spivey teaches all limitations of claim 1. Petitioner also has put forth a sufficient rationale for combining Spivey with Ellis with a reasonable expectation of success. We also have considered Patent Owner's evidence of secondary considerations of nonobviousness, and we accord it little or no weight at this juncture. Based on the present record, we determine that Petitioner has established a reasonable likelihood that it would prevail in

showing that the invention of claim 1 as a whole would have been obvious over the combination of Ellis and Spivey.

4. Claims 8 and 9

We have reviewed Petitioner's analysis for claims 8 and 9, which depend directly or indirectly from claim 1. Pet. 40–48. Patent Owner relies on the same arguments discussed above. We are persuaded preliminarily by Petitioner's analysis for claims 8 and 9. Based on the present record, Petitioner has established a reasonable likelihood that it would prevail in showing that the inventions of claims 8 and 9 as a whole would have been obvious over the combination of Ellis and Spivey.

E. Obviousness Grounds Based on Ellis, Spivey, and Herzog

Petitioner contends that claims 2–7 would have been obvious over the combination of Ellis, Spivey, and Herzog. Pet. 48–58. Patent Owner disputes Petitioner's contentions. Prelim. Resp. 45, 61–71.

1. Herzog

Herzog is a U.S. patent application publication titled "Time Synchronization of Video and Data Inside a Mobile Device" that discloses a mobile device including a processor configured to receive and format live video data, audio data, and meta-data for display on the mobile device, and synchronize selected meta-data with the video and audio for simultaneous display. Ex. 1015, codes (54), (57). Figure 4 of Herzog is reproduced below.

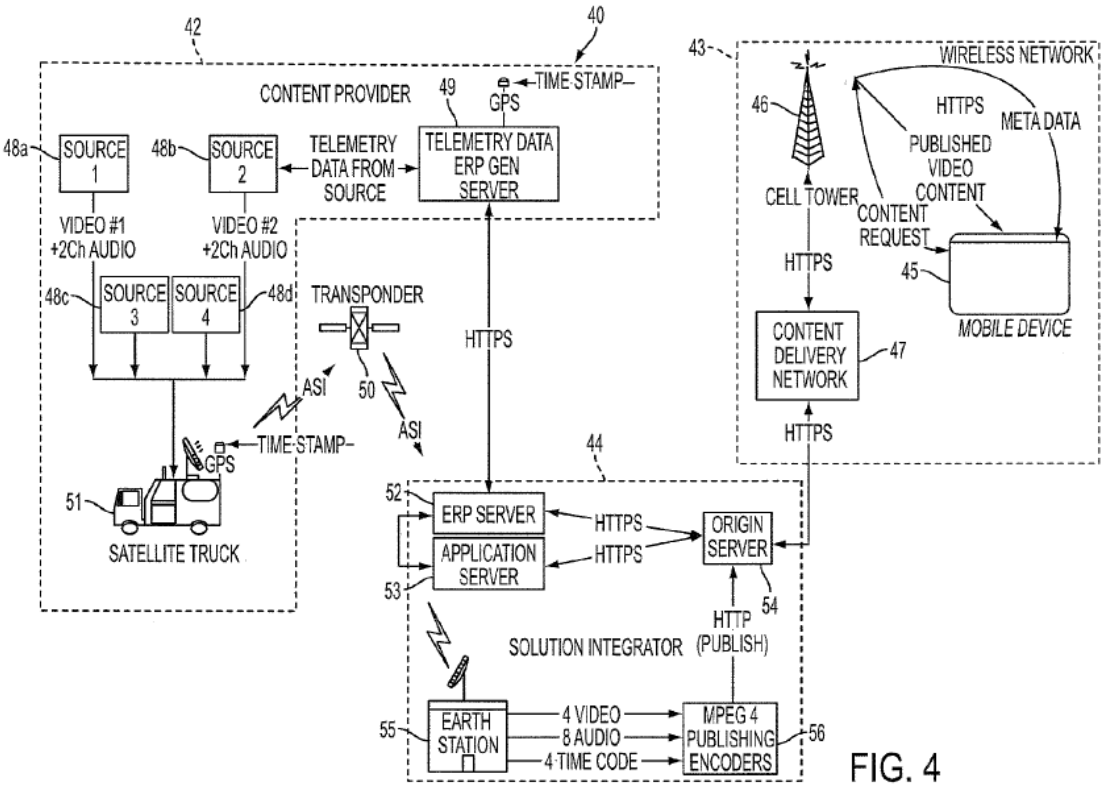

FIG. 4

Figure 4 shows system 40 that provides communications to mobile device 45 in wireless network 43 via content delivery network 47. Ex. 1015 ¶¶ 9, 43. System 40 includes content provider 42, which provides video and audio data of an event occurring in real time, along with meta-data. *Id.* ¶ 45. Content provider 42 provides video/audio streams from imaging sources 48*a*–48*d*. *Id.* ¶ 46. Content provider 42 also includes an Enhanced Result Protocol (ERP) generator server 49 configured to receive meta-data from imaging sources 48*a*–48*d*. *Id.* ¶ 47. ERP generator server 49 extracts meta-data parameters that may be of interest to a user, formats the extracted meta-data into an HTTPS protocol, and transmits the formatted meta-data to solution integrator 44. *Id.* Solution integrator 44 transmits the video/audio stream and meta-data to content delivery network 47 for delivery to mobile device 45. *Id.* ¶¶ 48–51.

Petitioner notes that Herzog was published on June 11, 2015, and contends that Herzog qualifies as prior art under 35 U.S.C. § 102(a). Pet. 6. Patent Owner does not dispute the prior art status of Herzog at this juncture. For purposes of this Decision, we determine that Herzog qualifies as prior art under 35 U.S.C. § 102(a) because Herzog's publication date of June 11, 2015, is before the effective filing date of the challenged claims, which is August 7, 2017. Ex. 1003, code (63); Ex. 1015, code (43).

2. Claims 2–7

Building on its obviousness rationale based on Ellis and Spivey, Petitioner contends that an ordinarily skilled artisan "would have added Herzog to implement its feature of multiple live streams from one sporting event." Pet. 49 (citing Ex. 1001 ¶¶ 120–124). Petitioner explains that "providing more content to a content distribution system such as Ellis by adding video feeds from different perspectives of a live event for the user's benefit." *Id.* at 49–50 (citing Ex. 1001 ¶¶ 120–122; Ex. 1015 ¶ 46). Based on the present record, we are persuaded preliminarily by Petitioner's obviousness rationale.

We have reviewed Petitioner's analysis for the limitations of claims 2–7, which depend directly or indirectly from claim 1. Pet. 50–58. Patent Owner relies on the same arguments discussed above. We are persuaded preliminarily by Petitioner's analysis for claims 2–7. Based on the present record, Petitioner has established a reasonable likelihood that it would prevail in showing that the inventions of claims 2–7 as a whole would have been obvious over the combination of Ellis, Spivey, and Herzog.

F. Obviousness Grounds Based on Herzog, Ellis, and Spivey

Petitioner contends that claims 1–9 would have been obvious over the combination of Herzog, Ellis, and Spivey. Pet. 59–87. Patent Owner disputes Petitioner's contentions. Prelim. Resp. 46–71.

1. Claim 1

a. Rationale for the Combination

Similar to the Ellis–Spivey ground discussed above (*see supra* § II.D.3.a), Petitioner contends that an ordinarily skilled artisan "would have known that the websocket client-server communication protocol employed by Spivey was an alternative to the HTTP polling used by Herzog." Pet. 60 (citing Ex. 1001 ¶¶ 126, 142–143). As such, Petitioner contends an ordinarily skilled artisan would have incorporated Spivey's message queue server device (MQSD) into Herzog's origin server "to achieve full-duplex communications between a client and a remote host with low latency." *Id.* at 60–61 (citing Ex. 1001 ¶¶ 80–87, 143), 71 (citing Ex. 1001 ¶ 456). Petitioner further contends that an ordinarily skilled artisan "would have appreciated the benefits associated with Spivey's MQSD (socket server) which establishes websocket connections with client devices, including convenient and efficient full-duplex communications between a client and a remote host with low latency," thus improving "Herzog's latency issues." *Id.* at 61 (citing Ex. 1001 ¶ 144; Ex. 1017 ¶¶ 27–28, 43, 61, 74, 92, 96). According to Petitioner, an ordinarily skilled artisan "would have had a reasonable expectation of success in combining Herzog with Spivey because Spivey contemplates being implemented in a digital content delivery system such as Herzog." *Id.* at 62 (citing Ex. 1001 ¶ 147; Ex. 1017 ¶ 155).

Petitioner also cites the complementary nature of the references and the simple substitution of known elements as supporting the predictable success of the combination. *Id.* at 62–63 (citing Ex. 1001 ¶¶ 147–148)

Petitioner additionally contends that, "[t]o the extent Herzog does not specifically describe multiple live event streaming," an ordinarily skilled artisan "would have found it obvious to implement such functionality into Herzog/Spivey, as taught by Ellis." Pet. 63 (citing Ex. 1001 ¶ 155–157; Ex. 1016 ¶¶ 39–41, Fig. 2B). In particular, Petitioner cites Ellis's teaching of providing multiple live streams of digital content from two different live sporting events. *Id.* at 65 (citing Ex. 1016 ¶¶ 62–63, Fig. 2B). Petitioner contends that an ordinarily skilled artisan "would have understood that Herzog was already equipped to provide multiple different live video and meta-data streams," and an ordinarily skilled artisan "would have been motivated to configure Herzog with Ellis's multiple event functionality because . . . users would enjoy having more content options, *e.g.*, multiple live event streams, chat information, and advertising content." *Id.* at 63 (citing Ex. 1001 ¶ 157; Ex. 1016 ¶¶ 39–41, 62, Figs. 1, 2B). Petitioner notes that Herzog "already provides multiple live streams," so an ordinarily skilled artisan "would have understood that adding a second live event to Herzog . . . applies a known technique to a known device that was ready for improvement to yield a predictable result." *Id.* at 64 (citing Ex. 1001 ¶ 158).

Patent Owner disputes that an ordinarily skilled artisan would have combined Spivey with Herzog. Prelim. Resp. 46–54. Specifically, Patent Owner argues that Petitioner's proposed combination is inoperable and departs from the express teachings of Herzog. *Id.* at 47–51. In particular, Patent Owner argues that "Herzog's system *requires* a robust latency period

to achieve its stated goal: matching timestamped video/audio steams with timestamped meta-data streams at a mobile device." *Id.* at 47 (citing Ex. 1015 ¶¶ 56, 64, 74; Ex. 2001 ¶¶ 281–283). Patent Owner also puts forth arguments similar to those for the Spivey–Ellis ground disputing that an ordinarily skilled artisan would have incorporated elements from Spivey to solve a latency problem in Herzog. *Id.* at 51–54. Patent Owner additionally disputes that an ordinarily skilled artisan would have combined Ellis with Herzog. Prelim. Resp. 54–56. According to Patent Owner, "Petitioner's proposals rest on conclusory statements that provide no guidance for how, exactly, Herzog would work in the context of a multi-event system, especially as the Herzog teachings are limited to a single event." *Id.* at 54–55 (citing Ex. 2001 ¶¶ 298–301); *see also id.* at 50 (similar argument). Patent Owner also argues that Petitioner fails to explain "how the time stamp matching techniques of Herzog would be workable" given "the exponential technical complexity involved in time stamp matching across multiple live events." *Id.* at 55 (citing Ex. 2001 ¶¶ 300–301); *see also id.* at 50–51 (similar argument).

Based on present record, we are persuaded preliminarily by Petitioner's reasons for combining Spivey and Ellis with Herzog. We start with Petitioner's contention that an ordinarily skilled artisan would have implemented Herzog's origin server as a websocket server based on Spivey's teachings in order to improve latency. Pet. 59–63. Petitioner's contention is supported by the same disclosures in Spivey that were discussed with respect to the Ellis–Spivey ground. *See supra* § II.D.3.a. We also are persuaded preliminarily by Petitioner's contention that "it would have been obvious to substitute any of Herzog's meta-data distribution

elements with any combination of Spivey's LDSD, MQSD, and/or Live Data Source(s), which are similarly involved in transmitting live event data to users and may be configured in any manner." Pet. 63 (citing Ex. 1001 ¶ 148; Ex. 1017 ¶ 34). This supports Petitioner's assertion of expected success in combining Herzog and Spivey based on the simple substitution of known elements. *Id.* at 62–63 (citing Ex. 1001 ¶ 148).

Regarding Patent Owner's argument that improved latency might cause inoperability, we note that Herzog teaches compensating for different types of data having different latencies. Ex. 1015 ¶ 82. And, even if the resulting combination would have required processing a faster meta-data stream, Petitioner need not show that its combination is the best or preferred combination. *See, e.g., Novartis Pharm. Corp. v. West-Ward Pharm. Int'l Ltd.*, 923 F.3d 1051, 1059 (Fed. Cir. 2019) ("[O]ur case law does not require that a particular combination must be the preferred, or the most desirable, combination described in the prior art in order to provide motivation for the current invention."); *PAR Pharm., Inc. v. TWI Pharms., Inc.*, 773 F.3d 1186, 1197–98 (Fed. Cir. 2014) (holding that it is not necessary to show that a combination is "the best option, only that it be a suitable option."). Additionally, the challenged claims do not recite that the first event information must be gated or synchronized with the first live sporting event, so this argument is not commensurate with the scope of the challenged claims.

Petitioner's contentions and Dr. Wicker's testimony regarding latency rely on Spivey's disclosures to support their assertion that Herzog's system is susceptible to latency issues. Pet. 61; Ex. 1001 ¶ 144 (citing Ex. 1017 ¶¶ 27–28). Spivey describes that "[a]s technology allows users to receive

such data away from desktop computers, the demand for live event data *in real time* on mobile devices has increased." Ex. 1017 ¶ 21 (emphasis added). Spivey also describes that its technology reduces delay "providing *a significant advantage over the conventional practices*." *Id.* ¶ 28 (emphasis added). At this early juncture, we find that Petitioner's argument of motivation to achieve reduced latency is supported sufficiently for purposes of institution based on Spivey's disclosure of user "demand" for "live event data in real time" and that Spivey's technology would have been understood to provide "*a significant advantage over the conventional practices*." *Id.* ¶¶ 2, 28 (emphasis added). And, even though Patent Owner and Dr. Rubin argue that Herzog does not have a latency problem (Prelim. Resp. 51–52 (citing Ex. 2001 ¶¶ 287–291)), we find Petitioner has the better argument based on the preliminary record.

Regarding Petitioner's proposed combination of Herzog and Ellis, we are persuaded preliminarily that an ordinarily skilled artisan would have made the combination so "users would enjoy having more content options, *e.g.*, multiple live event streams, chat information, and advertising content." Pet. 63 (citing Ex. 1001 ¶ 157; Ex. 1016 ¶¶ 39–41, Figs. 1, 2B). Patent Owner's arguments to the contrary are unavailing because they are based on incorporating technological features of Ellis's tuning technology. *See* Prelim. Resp. 50 (citing Ex. 2001 ¶¶ 300–301); *see also id.* at 54–55 (citing Ex. 2001 ¶¶ 298–301). Petitioner's combination does not rely on that technology; it merely incorporates Ellis's teaching of providing more content options, such as options from multiple broadcasters, into Herzog's system. *See* Pet. 63; Ex. 1001 ¶ 157. Petitioner is not required to show that all of Ellis's features can be bodily incorporated in Herzog's system in order

to prove obviousness. *See In re Keller*, 642 F.2d 413, 425 (CCPA 1981) ("The test for obviousness is not whether the features of a secondary reference may be bodily incorporated into the structure of the primary reference," but, "[r]ather, the test is what the combined teachings of the references would have suggested to those of ordinary skill in the art."). Furthermore, Herzog teaches receiving four streams from four different imaging sources 48a–48d (Ex. 1015 ¶ 46), and Petitioner's proposed modification is merely that those four different streams may be from different broadcasters. *See* Pet. 67.

For reasons similar to those discussed above (*see supra* § II.D.3.a), we are persuaded that the complementary nature of Herzog's, Ellis's, and Spivey's teachings supports an expectation of success in combining these references (*see* Pet. 61–62), and we find unavailing Patent Owner's arguments to the contrary (*see* Prelim. Resp. 51–56). In particular, Herzog is similar to Ellis and Spivey insofar as Herzog relates to content delivery for real-time events quickly to multiple users over the internet. *See, e.g.*, Ex. 1015 ¶ 49 (describing publishing "video imagery, related audio and meta-data that are received from the content provider 42 onto the content delivery network 47 for presentation to users/consumers of the content via mobile devices such as device 45"), ¶ 51 (describing that an "Internet server provider (ISP)" may transfer data to local content delivery network 47), Figs. 1, 4, 7.

Patent Owner's arguments that Petitioner relies on impermissible hindsight bias to "reconstruct the invention" (Prelim. Resp. 56–60) and Dr. Rubin's related testimony appear to be contradicted by Petitioner's evidence in the preliminary record. As discussed above, Petitioner's

arguments that a person of ordinary skill in the art would have made its proposed combination are sufficient for purposes of institution.

For these reasons, we are persuaded preliminarily by Petitioner's rationale for combining Herzog, Ellis, and Spivey.

b. Preamble 1.0

The preamble of claim 1 recites

> [a] system for providing, to a first plurality of viewer client devices, a first plurality of copies of a first live stream of digital content relating to a first live sporting event, and for providing, to a second plurality of viewer client devices, a second plurality of copies of a second live stream of digital content relating to the first live sporting event or a second live sporting event.

Ex. 1003, 56:46–52. Petitioner cites Herzog's teaching of providing "live video and audio data" to user devices over a "communication network." Pet. 64 (citing Ex. 1015, code (57)). Petitioner also cites Herzog's example of providing "multiple video/audio streams of race cars and drivers, as they are imaged at different locations on the race track." *Id.* at 64–65 (citing, *inter alia*, Ex. 1015 ¶ 45, Fig. 4). Furthermore, Petitioner cites Ellis's teaching of "providing multiple live streams of digital content that is of two different live sporting events." *Id.* at 65 (citing Ex. 1016 ¶¶ 62–63, Fig. 2B). According to Petitioner, the combination of Herzog and Ellis "provide[s] a system where multiple different users can select the same, or different, live stream of digital content that relates to a live sporting event." *Id.* at 65–66 (citing Ex. 1001 ¶¶ 444–445).

Patent Owner does not dispute Petitioner's analysis of the preamble at this time. Based on the present record, we are persuaded preliminarily that

the combination of Herzog and Ellis teaches the preamble.[6] In particular, Petitioner shows sufficiently that Herzog teaches a system that provides multiple streams of data for a live sporting event (*see, e.g.*, Ex. 1015, code (57), ¶ 45, Fig. 4), and Ellis teaches providing video streams of more than one event (*see, e.g.*, Ex. 1016 ¶¶ 62–63, Fig. 2B).

c. Limitation 1.1

Claim 1 further recites "A) a plurality of media sources to" perform various steps. Ex. 1003, 56:53. Petitioner cites Herzog's multiple MPEG 4 publishing encoders that can "'encode[]' the video and audio data and then the 'encoded video is then published to the content delivery network 47 (for example) via IP utilizing [] HLS [HTTP Live Streaming]." Pet. 66 (citing Ex. 1015 ¶¶ 48, 49, 55).

At this juncture, Patent Owner does not dispute Petitioner's analysis of this limitation. Based on the present record, Petitioner has shown sufficiently that Herzog's multiple MPEG 4 publishing encoders for encoding video audio data teaches the recited "media sources." *See, e.g.*, Ex. 1015 ¶¶ 48, 49, 55.

d. Limitation 1.2

Claim 1 further recites that the plurality of media sources "receive the first live stream of digital content and the second live stream of digital content." Ex. 1001, 56:54–55. Petitioner contends that Herzog's MPEG 4

[6] Because Petitioner shows sufficiently for purposes of institution that the combination of Herzog and Ellis teaches the preamble, we need not determine whether the preamble is limiting. *See Realtime Data*, 912 F.3d at 1375.

publishing encoders receive the video and audio data from a live event using "communication technologies for communicating multiple video and audio streams." Pet. 66 (citing Ex. 1015 ¶¶ 46, 49).

At this juncture, Patent Owner does not dispute Petitioner's analysis. Based on the present record, we are persuaded preliminarily that Herzog teaches this limitation. *See, e.g.*, Ex. 1015 ¶¶ 46, 49

e. Limitations 1.3 and 1.4

Claim 1 further recites that the plurality of media sources

> provide a first copy of the first plurality of copies to a first viewer client device of the first plurality of viewer client devices via a first video Internet communication channel between the plurality of media sources and the first viewer client device of the first plurality of viewer client devices; and
>
> provide a first copy of the second plurality of copies to a first viewer client device of the second plurality of viewer client devices via a second video Internet communication channel between the plurality of media sources and the first viewer client device of the second plurality of viewer client devices.

Ex. 1003, 56:56–67. For the viewer client devices, Petitioner contends that "Herzog discloses providing multiple different users with the option to select any of the available video feeds." Pet. 67 (citing Ex. 1015 ¶ 70). Specifically, Petitioner posits an example where "Herzog . . . provides at least four different video streams" and "two or more users would select a first stream to view, and two or more different users would select a second stream to view." *Id.* (citing Ex. 1001 ¶ 449; Ex. 1015 ¶¶ 46, 70).

Petitioner further contends that an ordinarily skilled artisan "would have understood that each user device receives their own copy of the video stream" in light of Herzog's teaching of providing a selected video stream to

each user individually via HTTP live streaming. Pet. 67 (citing Ex. 1001 ¶ 450; Ex. 1015 ¶ 51). Regarding the recited video internet communication channels, Petitioner cites Herzog's teaching of sending video via HTTP Live Streaming (HLS), with each user receiving an individual copy from the MPEG 4 publishing encoders over a video internet communication channel that is unique to each user device. *Id.* at 67–68 (citing Ex. 1001 ¶ 451; Ex. 1015 ¶¶ 2, 51).

At this juncture, Patent Owner does not dispute Petitioner's analysis. Based on the present record, Petitioner shows sufficiently that Herzog teaches providing multiple different video streams to multiple different users over individual HTTP live streaming channels. *See, e.g.*, Ex. 1015 ¶¶ 2, 15, 46, 51, 70.

f. Limitation 1.5

Claim 1 further recites "B) a control server to periodically retrieve, via the Internet, first event information germane to the first live sporting event." Ex. 1003, 57:1–3. Petitioner contends that Herzog's Enhanced Result Protocol (ERP) Server is a generic server that retrieves meta-data from the ERP generator server over the internet in HTTPS format. Pet. 68–69 (citing Ex. 1015 ¶¶ 16, 17, 45, 47, 50, Fig. 4). According to Petitioner, Herzog's retrieved meta-data (e.g., the "status of each car and driver in the race") is germane to the live sporting event (e.g., a race). *Id.* (citing Ex. 1015 ¶ 45).

Based on an analysis similar to that discussed above (*see supra* § II.D.3.e), Petitioner also cites Ellis's supplemental content source as periodically retrieving information sports scores, wagering data, etc., over the internet. Pet. 69.

Petitioner acknowledges that "a periodic time interval is not mentioned in Herzog or Ellis," but Petitioner contends that an ordinarily skilled artisan "would have understood that any system that provides real-time sports statistics, such as Herzog, would necessarily update the statistics on a periodic basis. Pet. 69 (citing Ex. 1001 ¶ 454). Petitioner explains that, "[t]o reduce latency using an HTTP connection," an ordinarily skilled artisan "would have known to have Herzog's ERP server periodically check for the content availability as often as possible." *Id.* at 69–70 (citing Ex. 1001 ¶ 454).

Patent Owner does not dispute Petitioner's analysis at this juncture. We note that Petitioner's proposed combination does not incorporate Ellis's supplemental content source and, instead, only incorporates Ellis's teachings on multiple live events into the Herzog/Spivey combination. *See* Pet. 63–64. Thus, at this preliminary stage, we are not persuaded by Petitioner's contentions regarding Ellis's supplemental content source for teaching limitation 1.5 because, based on the current record, Petitioner has not shown sufficiently how Ellis's supplemental content source would be part of Petitioner's proposed combination. Notwithstanding, we are persuaded preliminarily that Herzog's ERP Server teaches limitation 1.5. *See, e.g.*, Ex. 1001 ¶ 454; Ex. 1015 ¶¶ 45, 47, 50, Fig. 4.

g. Limitation 1.6

Claim 1 further recites "C) at least one socket server communicatively coupled to the control server." Ex. 1003, 57:4–5. Petitioner notes that Herzog teaches providing live event video and meta-data streams over separate connections, but acknowledges that "Herzog does not specifically

disclose some backend server architecture supporting the data distribution." Pet. 59–60 (citing Ex. 1001 ¶¶ 126, 142–143, 156; Ex. 1015 ¶¶ 12, 48–52, 67, 80–81, Figs. 4, 7). As such, and based on its reasons for combining Spivey with Herzog (*see supra* § II.F.1.a), Petitioner contends that an ordinarily skilled artisan would have incorporated Spivey's message queue server device (MQSD) into Herzog's origin server "to achieve full-duplex communications between a client and a remote host with low latency." *Id.* at 60–61 (citing Ex. 1001 ¶¶ 80–87, 142–143), 71 (citing Ex. 1001 ¶ 456). Petitioner further contends that an ordinarily skilled artisan would have understood that Herzog's ERP server (i.e., the recited "control server") transmits HTTPS information to Spivey's MQSD (i.e., the recited "socket server"). *Id.* at 71 (citing Ex. 1001 ¶ 457).

At this juncture, Patent Owner does not dispute Petitioner's analysis.[7] Petitioner shows sufficiently that Herzog's ERP server (i.e., the "control server") transmits data to Herzog's origin server as modified to incorporate Spivey's message queue server device (i.e., the "socket server"). *See, e.g.*, Ex. 1001 ¶¶ 456–457; Ex. 1015 ¶¶ 50–51, 83, Fig. 4. For the same reasons mentioned above, we also are persuaded preliminarily that an ordinarily skilled artisan would have modified Herzog's origin server to include Spivey's message queue server device. *See supra* § II.F.1.a; Ex. 1001 ¶ 456.

[7] We note that Patent Owner disputes Petitioner's analysis of a related claim term, i.e., "event socket," for limitation 1.8. We discuss those arguments above and below. *See supra* § II.D.3.i; *infra* § II.F.1.i.

h. Limitation 1.7

Claim 1 further recites that that the socket server "receive[s] from the control server at least the first event information." Ex. 1003, 57:6–7. Petitioner notes that Herzog's Enhanced Result Protocol (ERP) Server "receives the meta-data from ERP generator server 49 in HTTPS communication format" and "acts as an intermediary between the ERP generator server and the origin server." Pet. 72 (quoting Ex. 1015 ¶¶ 50–51, Fig. 4). According to Petitioner, "[i]ncorporating Spivey's MQSD into Herzog's origin server would thus allow the MQSD (socket server) to receive from the ERP Server (control server) the meta-data provided (first event information)." *Id.* (citing Ex. 1001 ¶ 459).

At this juncture, Patent Owner does not dispute Petitioner's analysis.[8] Based on the present record, Petitioner shows sufficiently that Herzog's origin server as modified to incorporate Spivey's message queue server device (i.e., the "socket server") receives meta-data from Herzog's ERP server (i.e., the "control server"). *See, e.g.*, Ex. 1001 ¶ 459; Ex. 1015 ¶¶ 50–51, Fig. 4.

i. Limitation 1.8

Claim 1 further recites that the socket server

> transmit[s] the first event information to at least the first viewer client device of the first plurality of viewer client devices via a first event information Internet communication channel between at least one first event socket of the at least one socket server and the first viewer client device of the first plurality of

[8] We note that Patent Owner disputes Petitioner's analysis of a related claim term, i.e., "event socket," for limitation 1.8. We discuss those arguments above and below. *See supra* § II.D.3.i; *infra* § II.F.1.i.

> viewer devices, wherein the at least one first event socket corresponds to the first event information germane to the first live sporting event.

Ex. 1003, 57:8–16. Petitioner again cites Spivey's topic queues for teaching the recited "event socket." Pet. 73 (citing Ex. 1001 ¶¶ 461–463); *see also supra* § II.D.3.h. For "transmit[ting] the first event information to at least the first viewer client device of the first plurality of viewer client devices," Petitioner again cites Herzog's teaching of multiple different users having the option to receive any available video feed. Pet. 73; *see also supra* § II.F.1.e. Petitioner further notes that Herzog's origin server can transmit meta-data such as car position to content delivery network 47, and the user receives such meta-data "in an HTTPS communications protocol." Pet. 73 (citing Ex. 1015 ¶¶ 45, 51). Petitioner additionally cites Spivey's teaching that the MQSD "may push data from topic queues . . . to the subscribers of the topics corresponding to those topic queues." *Id.* (citing Ex. 1017 ¶ 46). According to Petitioner, an ordinarily skilled artisan "would have known that the websocket client-server communication protocol employed by Spivey was an alternative to the HTTP polling used by Herzog." *Id.* (citing Ex. 1001 ¶ 464).

For "transmit[ting] . . . via a first event information Internet communication channel between at least one first event socket of the at least one socket server and the first viewer client device of the first plurality of viewer devices," Petitioner cites Herzog's teaching of "providing event information over a separate communication path than the video signal where there is 'a unique video and metadata source that do not follow the same path of transmission.'" Pet. 74 (citing Ex. 1015 ¶¶ 47–51, 83, Figs. 1, 5, 4, 6). Petitioner additionally cites the same teachings discussed regarding the

combination of Spivey and Ellis teaching the distribution of event information from a socket to a user device over an internet connection using a URL and text string. *Id.* at 74–75 (citing Ex. 1001 ¶ 467); *see supra* § II.D.3.i.

Patent Owner relies on the same arguments discussed above with respect to the Ellis–Spivey ground. Prelim. Resp. 60; *see supra* § II.D.3.i. For the same reasons discussed above, Petitioner has shown sufficiently that Spivey teaches the recited "event socket." *See supra* § II.D.3.i. Petitioner also has shown sufficiently that Herzog teaches providing meta-data (i.e., "event information") and video to clients via separate communication paths. *See, e.g.*, Ex. 1015 ¶¶ 47–51, 83, Figs. 1, 5, 4, 6.

j. Secondary Considerations of Nonobviousness

Our analysis of secondary considerations of nonobviousness from above applies equally to this ground. *See supra* § II.D.3.j.

k. Conclusion Regarding Claim 1

Petitioner has shown sufficiently at this juncture that the combination of Herzog, Ellis, and Spivey teaches all limitations of claim 1. Petitioner also has put forth a sufficient rationale for combining Ellis and Spivey with Herzog with a reasonable expectation of success. We also have considered Patent Owner's evidence of secondary considerations of nonobviousness, and we accord it little or no weight at this juncture. Based on the present record, we determine that Petitioner has established a reasonable likelihood that it would prevail in showing that the invention of claim 1 as a whole would have been obvious over the combination of Herzog, Ellis, and Spivey.

2. Claims 2–9

We have reviewed Petitioner's analysis for claims 2–9, which depend directly or indirectly from claim 1. Pet. 75–87. Patent Owner relies on the same arguments discussed above. We are persuaded preliminarily by Petitioner's analysis for claims 2–9. Based on the present record, Petitioner has established a reasonable likelihood that it would prevail in showing that the inventions of claims 2–9 as a whole would have been obvious over the combination of Herzog, Ellis, and Spivey.

III. CONCLUSION

After considering the evidence and arguments presented in the current record, we determine that Petitioner has demonstrated a reasonable likelihood that it would prevail with respect to at least one of the claims challenged in the Petition. Accordingly, we institute an *inter partes* review on all of the challenged claims and all grounds presented in the Petition. At this stage of the proceeding, we have not made a final determination as to the patentability of the challenged claims.

IV. ORDER

Accordingly, it is

ORDERED that pursuant to 35 U.S.C. § 314, *inter partes* review is instituted as to claims 1–9 of the ’687 patent with respect to all grounds of unpatentability presented in the Petition; and

FURTHER ORDERED that *inter partes* review is commenced on the entry date of this Order, and pursuant to 35 U.S.C. § 314(c) and 37 C.F.R. § 42.4, notice is hereby given of the institution of a trial.

For PETITIONER:

W. Baker
Michael Dinnella
KIRKLAND & ELLIS LLP
todd.baker@kirkland.com
mtd5145@gmail.com

For PATENT OWNER:

Brian Eutermoser
Mikaela Stone
KING & SPALDING LLP
beutermoser@kslaw.com
mikaela.stone@kslaw.com

Trials@uspto.gov
571-272-7822

Paper # 9
Date: March 6, 2025

UNITED STATES PATENT AND TRADEMARK OFFICE

BEFORE THE PATENT TRIAL AND APPEAL BOARD

GENIUS SPORTS LTD.,
Petitioner,

v.

SPORTSCASTR INC. d/b/a PANDA INTERACTIVE,
Patent Owner.

IPR2024-01308
Patent 10,425,697 B2

Before BARBARA A. PARVIS, JOHN A. HUDALLA, and SHARON FENICK, *Administrative Patent Judges*.

PARVIS, *Administrative Patent Judge*.

DECISION
Granting Institution of *Inter Partes* Review
35 U.S.C. § 314

I. INTRODUCTION

Genius Sports Ltd. ("Petitioner") filed a Petition (Paper 1 ("Pet.")) requesting *inter partes* review of claims 1–9 ("challenged claims") of U.S. Patent No. 10,425,697 B2 (Ex. 1006, "the '697 patent"). SportsCastr Inc. (d/b/a PANDA Interactive) ("Patent Owner") filed a Preliminary Response. Paper 8 ("Prelim. Resp.").

We have authority to determine whether to institute review under 35 U.S.C. § 314 and 37 C.F.R. § 42.4. We may institute an *inter partes* review if "the information presented in the petition . . . and any response . . . shows that there is a reasonable likelihood that the petitioner would prevail with respect to at least 1 of the claims challenged in the petition." 35 U.S.C. § 314.

Upon consideration of the contentions and the evidence of record at this preliminary stage, we determine that Petitioner has demonstrated a reasonable likelihood of prevailing on at least one of the challenged claims of the '697 patent. Accordingly, we grant Petitioner's request and institute an *inter partes* review of all challenged claims of the '697 patent and with respect to all grounds set forth in the Petition.

II. BACKGROUND

A. Real Parties-in-Interest

Petitioner identifies itself as the real party-in-interest. Pet. 3. Patent Owner names itself as the real party-in-interest. Paper 5, 1.

B. Related Matters

Both parties identify, as a matter currently involving the '697 patent, *SportsCastr Inc. v. Genius Sports Ltd.*, No. 2:23-cv-00471 (E.D. Tex.) ("related parallel proceeding"). Pet. 3; Paper 5, 1. Patent Owner also

identifies *SportsCastr Inc. v. Sportradar Group, AG et al*., 2:23-cv-00472 (E.D. Tex.) as a matter involving the ’697 patent. Paper 5, 1.

The parties also identify that Petitioner filed a second petition challenging the ’697 patent as *Genius Sports Ltd. v. SportsCastr Inc. d/b/a PANDA Interactive*, IPR2024-01309 (PTAB). Pet. 3–4; Paper 5, 1. Petitioner filed a document which ranks the petitions in the instant case and IPR2024-01309 and provides an explanation of the material differences between the petitions. *See* Paper 3 (Petitioner’s Reasons for Parallel Petitions and Petition Ranking (“Ranking”)). Petitioner ranks the instant Petition second, but argues we should “institute both petitions” because (1) “the claims cannot be addressed in one petition because of the number and length of the claims” and “because of the nature of the claims themselves”; (2) “each petition challenges different claims”; and (3) “the petitions cite essentially the same art against all claims, minimizing the burden on the Board from instituting both petitions.” *Id.* at 1. Petitioner also argues “the Board’s analysis of the claims asserted in the [related parallel proceeding] would not be complete without considering both petitions.” *Id.* at 2.

In accordance with the Consolidated Trial Practice Guide[1] (“CTPG”), issued in November 2019, “one petition should be sufficient to challenge the claims of a patent in most situations.” CTPG 59. In the instant proceeding, however, we agree with Petitioner’s arguments regarding filing two petitions. For example, we find that each petition challenges different claims and that Petitioner’s division of its challenges into two petitions is supported by the length and nature of the claims. We also agree that Petitioner’s

[1] Available at https://www.uspto.gov/TrialPracticeGuideConsolidated.

assertion of the same art minimizes the burden on the Board and the parties. Patent Owner does not respond to Petitioner's arguments that we should institute both petitions. *See generally* Prelim. Resp. We, therefore, consider the merits of the instant petition, and, for the reasons given below, we determine Petitioner has demonstrated a reasonable likelihood of prevailing on at least one of the challenged claims of the '697 patent.

Petitioner further identifies four other petitions challenging patents related to the '697 patent in IPR2024-01305, IPR2024-01307, IPR2024-01310, and IPR2024-01311. Pet. 3–4.

C. The '697 Patent

The '697 patent is titled "Systems, Apparatus, and Methods for Scalable Low-Latency Viewing of Broadcast Digital Content Streams of Live Events, and Synchronization of Event Information with Viewed Streams, via Multiple Internet Channels." Ex. 1006, code (54). The '697 patent relates to systems and methods that facilitate providing live stream video and/or audio broadcasts to viewers in real time. *Id.* at 2:49–57. Figure 1A of the '697 patent is reproduced below.

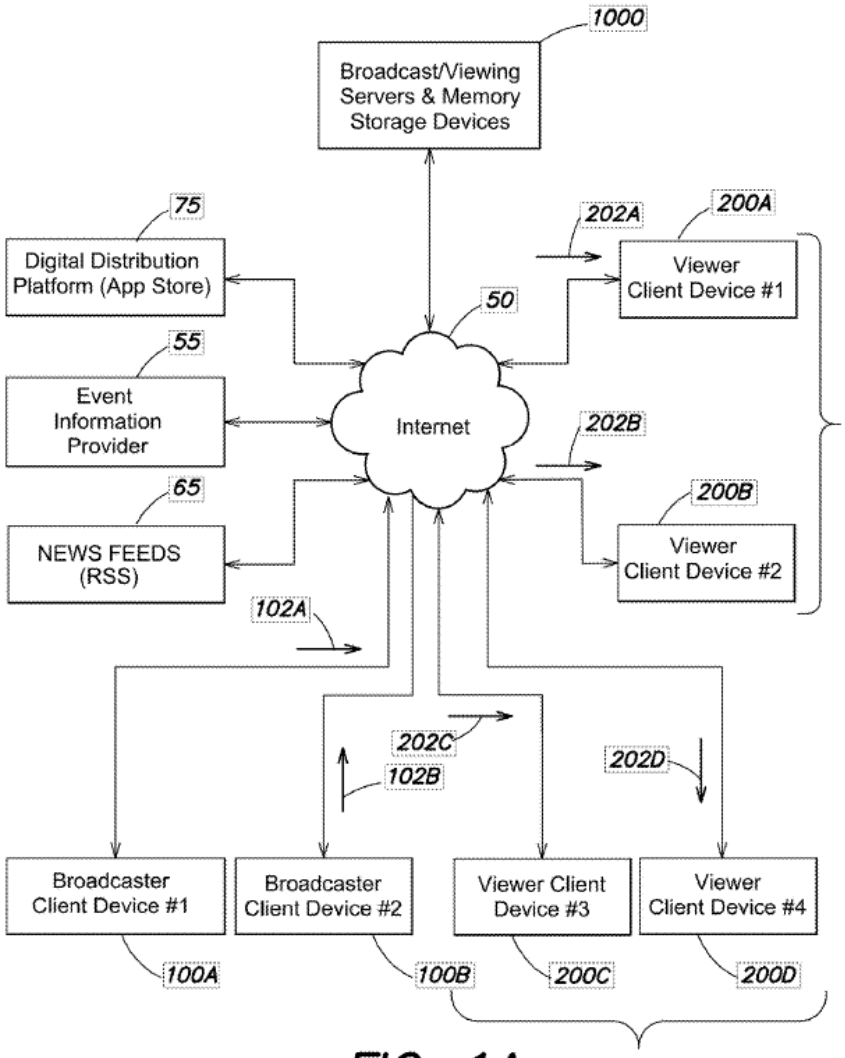

FIG. 1A

Figure 1A is a block diagram of a system facilitating live streaming digital content from multiple broadcasters to multiple viewers. *Id.* at 11:9–12.

The system shown in Figure 1A includes broadcaster client devices 100A and 100B, viewer client devices 200A–200D, broadcast/viewing servers and memory storage devices 1000, event information provider 55, one or more news feeds 65, and digital distribution platform 75, all coupled together via Internet 50. *Id.* at 14:41–49. In Figure 1A, first broadcaster client device 100A provides first live stream of digital content 102A, and copies 202A and 202B of digital content 102A are received by viewer client

devices 200A and 200B, respectively. *Id.* at 15:11–16. Similarly, second broadcaster client device 100B provides second live stream of digital content 102B, and copies 202C and 202D are received by viewer client devices 200C and 200D, respectively. *Id.* at 15:17–22. Broadcast/viewing servers and memory storage devices 1000 may retrieve news and/or event information germane to a live stream of digital content from news feeds 65 and event information provider 55 and convey the relevant news and/or event information to one or more client devices. *Id.* at 15:22–29.

Figure 2, reproduced below, is a block diagram of broadcast/viewing servers and memory storage devices 1000 in the system of Figure 1A. *Id.* at 11:16–18, 18:26–34.

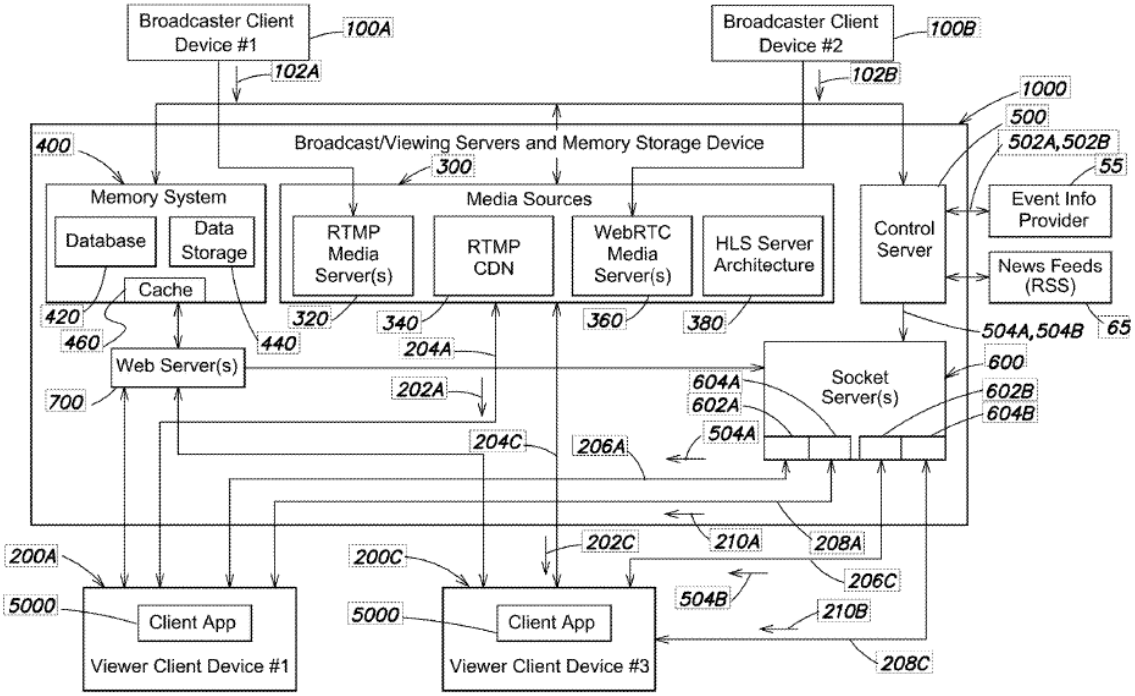

FIG. 2

Figure 2 is a block diagram of servers/memory storage devices 1000. *Id.* at 11:16–18, 18:26–34.

Figure 2 shows servers/memory storage devices 1000 including, in relevant part, a plurality of media sources 300, control server 500, one or more web servers 700, and socket server 600. *Id.* at 18:45–52, 19:7–20:5. Media sources 300 receive live streams of digital content (102A, 102B) from broadcaster client devices (100A, 100B) and provide copies (202A, 202C) to viewer client devices (200A, 200C). *Id.* at 19:7–13. Web server 700 supports an application programming interface to facilitate communication between servers/memory storage devices 1000 and client devices. *Id.* at 18:45–52. Control server 500 retrieves news and/or event information germane to the live streams of digital content (102A, 202C) from news feeds 65 and event information provider 55. *Id.* at 19:41–45. Socket servers 600 facilitate communication of synchronized event information retrieved by control server 500 to broadcaster and viewer client devices. *Id.* at 19:67–20:5. For example, control server 500 may retrieve first score information 504A for a first live sporting event and provide it to socket server 600, which establishes event socket 602A. *Id.* at 21:37–52. First viewer client device 200A connects to event socket 602A via a URL, and first score information 504A is transmitted to first viewer client device 200A. *Id.* at 21:59–22:6.

D. Illustrative Claims

Petitioner challenges claims 1–9 of the ’697 patent. Pet. 5. Claim 1 is independent, and claims 2–9 depend, directly or indirectly, from claim 1. Independent claim 1, reproduced below, is illustrative of the claimed subject matter.

1. [1.0[2]] A system for providing a first plurality of copies of a first broadcaster's live stream of digital content including first live sporting event video-based commentary from a first broadcaster client device to a first plurality of viewer client devices, and for providing a second plurality of copies of a second broadcaster's live stream of digital content including second live sporting event video-based commentary from a second broadcaster client device to a second plurality of viewer client devices, the system comprising:

[1.1] A) a plurality of media sources to:

[1.2] receive the first broadcaster's live stream of digital content and the second broadcaster's live stream of digital content;

[1.3] provide a first copy of the first plurality of copies to a first viewer client device of the first plurality of viewer client devices via a first video Internet communication channel between the plurality of media sources and the first viewer client device of the first plurality of viewer client devices; and

[1.4] provide a first copy of the second plurality of copies to a first viewer client device of the second plurality of viewer client devices via a second video Internet communication channel between the plurality of media sources and the first viewer client device of the second plurality of viewer client devices;

[1.5] B**)** a control server to periodically retrieve, via the Internet and from an event information provider, first event information germane to a first live sporting event, wherein the first event information includes first score information for the first live sporting event; and

[1.6] C) at least one socket server communicatively coupled to the control server to:

[2] Herein we use Petitioner's designations for the elements of claim 1. Pet. 22–40; Ex. 1007, 1.

[1.7] receive from the control server at least the first score information; and

[1.8] transmit the first score information to at least the first viewer client device of the first plurality of viewer client devices via a first event information Internet communication channel between at least one first event socket of the at least one socket server and the first viewer client device of the first plurality of viewer devices, wherein the at least one first event socket corresponds to the first event information germane to the first live sporting event.

Ex. 1006, 57:22–64.

E. Evidence

Petitioner relies on the patent references summarized in the table below.

Name	Reference	Exhibit
Herzog	US 2015/0163379 A1, filed Dec. 11, 2013, published June 11, 2015	1015
Ellis	US 2014/0229992 A1, filed Apr. 22, 2014, published Aug. 14, 2014	1016
Spivey	US 2016/0036910 A1, filed Aug. 4, 2014, published Feb. 4, 2016	1017

Petitioner also relies on the Declaration of Stephen B. Wicker, Ph.D. (Ex. 1001) to support its contentions that the challenged claims are unpatentable. Patent Owner relies on the Declaration of Aviel Rubin, Ph.D. (Ex. 2001) in support of its contentions that Petitioner has not shown that the challenged claims are unpatentable.

F. Asserted Grounds

Petitioner asserts that the challenged claims of the ’697 patent are unpatentable based on the following grounds summarized in the table below (Pet. 6):

Claim(s) Challenged	35 U.S.C. §[3]	References/Basis	Ground name
1, 7–9	103	Ellis, Spivey	1A
2–6	103	Ellis, Spivey, Herzog	1B
1–9	103	Herzog, Spivey, Ellis	2

III. ANALYSIS

A. Legal Standards

A patent claim is unpatentable as obvious if the differences between the claimed invention and the prior art are such that the claimed invention, as a whole, would have been obvious before the effective filing date to a person having ordinary skill in the art. *KSR Int'l Co. v. Teleflex Inc.*, 550 U.S. 398, 406 (2007). The question of obviousness is resolved on the basis of underlying factual determinations including: (1) the scope and content of the prior art; (2) any differences between the claimed subject matter and the prior art; (3) the level of ordinary skill in the art; and (4) when in evidence, objective evidence of nonobviousness, i.e., secondary considerations. *Graham v. John Deere Co.*, 383 U.S. 1, 17–18 (1966).

B. Level of Ordinary Skill in the Art

Petitioner asserts that a person of ordinary skill in the art

> would have had at least a bachelor's degree, or equivalent, in electrical engineering, computer engineering, computer science, or a related field or an equivalent number of years of working

[3] The Leahy-Smith America Invents Act ("AIA"), Pub. L. No. 112-29, 125 Stat. 284 (2011), amended 35 U.S.C. § 103, effective March 16, 2013. Because the challenged claims of the '697 patent have an apparent effective filing date after March 16, 2013, the AIA version of § 103 applies. Our determinations and findings herein would not change if the pre-AIA provisions applied.

> experience, and one to two years of experience in networking environments, including at least some experience with live-streaming network architecture. Ex.1001 ¶¶ 72–76. Additional education or experience in related fields could compensate for deficits in the above qualifications. *Id.*

Pet. 13.

Patent Owner asserts:

> A person of ordinary skill in the art would have a bachelor's degree in electrical engineering, computer engineering, computer science, or equivalent degree and, in addition, approximately two years of work experience with Internet video streaming, Internet communication, and related protocols. (EX-2001, §IV.C, ¶99.).

Prelim. Resp. 10.

The parties have not addressed whether the differences in these definitions impact the unpatentability analysis before us. We preliminarily adopt Patent Owner's formulation of the level of skill in the art, which is more specific and appears consistent with the specification and prior art presented, but on the present record we would reach the same determination under Petitioner's formulation of the level of skill.

C. Claim Construction

We interpret the challenged claims

> using the same claim construction standard that would be used to construe the claim in a civil action under 35 U.S.C. 282(b), including construing the claim in accordance with the ordinary and customary meaning of such claim as understood by one of ordinary skill in the art and the prosecution history pertaining to the patent.

37 C.F.R. § 42.100(b). Under that standard, we generally give claim terms their ordinary and customary meaning, as would be understood by a person of ordinary skill in the art at the time of the invention, in light of the

language of the claims, the specification, and the prosecution history. *Phillips v. AWH Corp*., 415 F.3d 1303, 1312–14 (Fed. Cir. 2005) (en banc).

Petitioner states that "[t]he claim terms of the '697 should be given their plain and ordinary meaning as understood by a person of skill in the art ('POSA')." Pet. 6.[4] Petitioner also argues that "a POSA would have understood a 'socket' to be a uniquely addressable communication endpoint on a server where first event information is provided to a VCD" (viewer client device). *Id.* at 37 (citing Ex. 1001 ¶ 560). Thus, Petitioner argues, an "event socket" is "a socket where information about one sporting event is provided to a VCD." *Id.* Petitioner does not propose an express construction for any other claim term. *See generally id.* Patent Owner states "[e]xcept for the 'event socket' term for which Patent Owner applies Petitioner's construction as discussed below, for purposes of this preliminary response, Patent Owner agrees that no terms require construction and construes all other terms consistent with their plain and ordinary meaning." Prelim. Resp. 10.

At this early stage, Petitioner's proposed constructions of "socket" and "event socket" (Pet. 37) are not disputed by Patent Owner. Prelim. Resp. 10. Neither party provides an express construction for any other claim term. *See generally* Pet.; Prelim. Resp. "The Board is required to construe 'only those terms . . . that are in controversy, and only to the extent necessary to resolve the controversy.'" *Realtime Data, LLC v. Iancu*, 912 F.3d 1368, 1375 (Fed. Cir. 2019) (quoting *Vivid Techs., Inc. v. Am. Sci. & Eng'g, Inc.*, 200 F.3d 795, 803 (Fed. Cir. 1999)). At this preliminary stage in the proceeding, we use Petitioner's proposed construction for "socket" and

[4] POSA and POSITA refer to a person of ordinary skill in the art.

"event socket" and the ordinary and customary meaning of the other claim terms. We decline to provide further analysis or an express construction of any other claim term as doing so is not needed to resolve the dispute between the parties.

D. Overview of Asserted Prior Art

1. Ellis (Exhibit 1016)

Ellis is titled "Systems and Methods for Providing Enhanced Sports Watching Media Guidance," and discloses systems and methods for accessing and displaying sports-related media content. Ex. 1016, codes (54), (57). Figure 1 of Ellis, reproduced below, illustrates an interactive media system. *Id.* ¶¶ 15, 39.

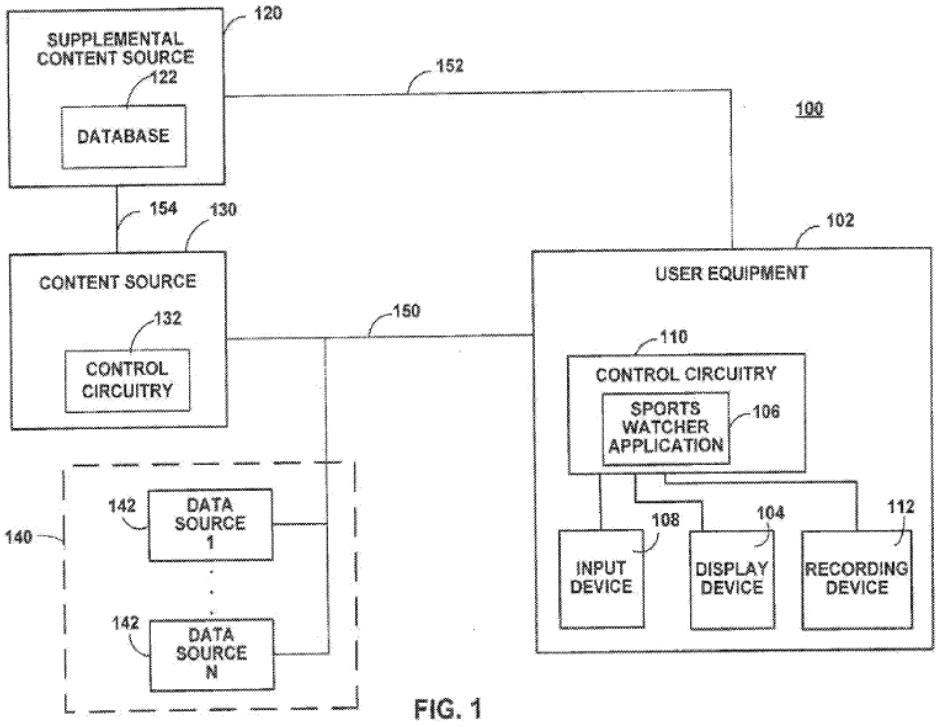

Figure 1 is a block diagram illustrating interactive media system 100. *Id.* ¶¶ 15, 39.

Figure 1 shows interactive media system 100 including user equipment 102, content source 130, supplemental content source 120, and data sources 140. *Id.* ¶ 39. User equipment device 102 receives media content, such as video broadcast programming, from content source 130 via communication path 150. *Id.* ¶¶ 39–40, Fig. 1. User equipment device 102 also receives content, such as real-time sports scores and game summary information, from supplemental content source 120 via communication path 152. *Id.* ¶¶ 39, 41, Fig. 1. Data sources 140 provide data for applications running on user equipment 102. *Id.* ¶ 46.

2. Spivey (Exhibit 1017)

Spivey is titled "Techniques to Broadcast Live Event Data in Real-Time," and discloses a system for broadcasting live event data in real-time. Ex. 1017, codes (54), (57). According to Spivey, its techniques "increase the speed at which live event data (e.g. sports scores and breaking news), are broadcast to mobile devices by using topic queues and open duplex communication connections, among other innovative techniques." *Id.* ¶ 27. Figure 1 of Spivey is reproduced below. *Id.* ¶¶ 3, 34.

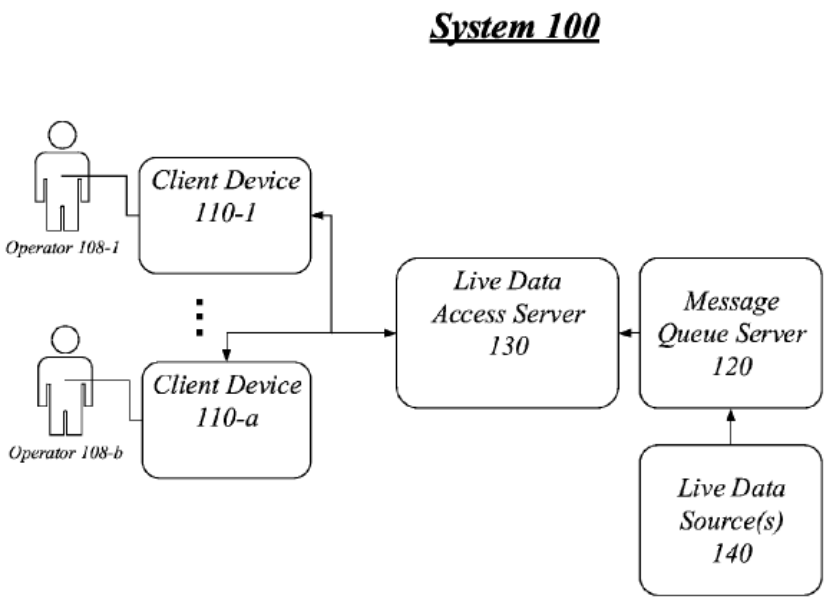

FIG. 1

Figure 1 illustrates system 100 for broadcasting live event data. *Id.* ¶¶ 3, 34.

Figure 1 shows system 100 including client devices 110-1 through 110-a, message queue server 120, and live data access server 130 coupled via one or more networks. *Id.* ¶ 34. Message queue server 120 receives live data from live data source(s) 140 and processes the live data so that it can be provided to client devices 110-1 through 110-a. *Id.* ¶¶ 35–37. Live data access server 130 interfaces between message queue server 120 and client devices 110-1 and 110-a. *Id.* ¶ 38.

Figure 4 of Spivey, reproduced below, illustrates operating environment 400. *Id.* ¶¶ 6, 53.

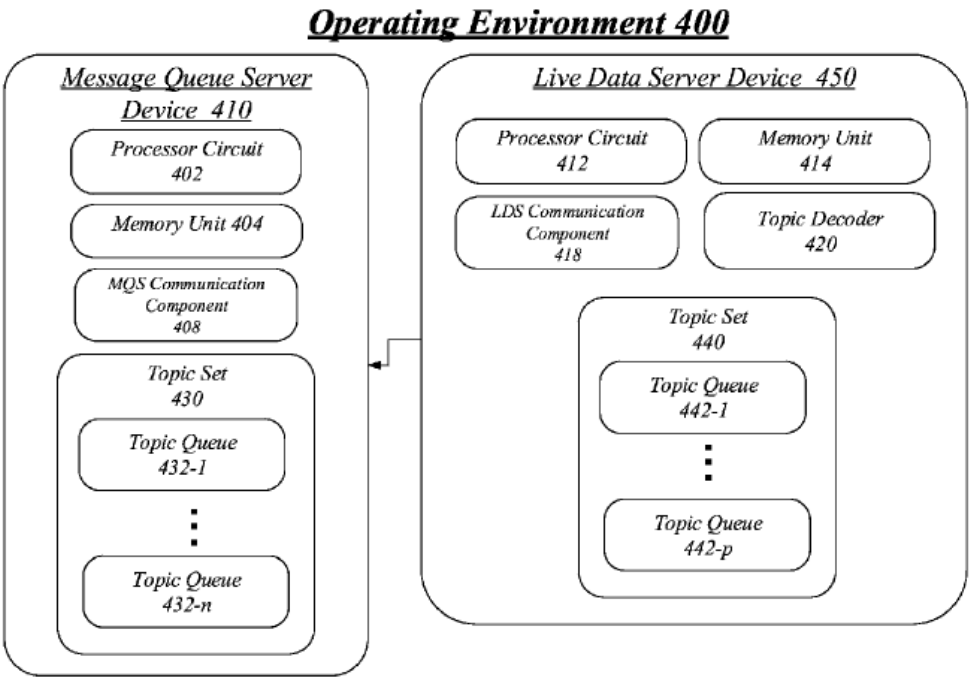

FIG. 4

Figure 4 illustrates operating environment 400. *Id.* ¶¶ 6, 53.

Figure 4 shows operating environment 400, in which message queue server 120 is implemented as message queue server device 410 and live data server device 450. *Id.* ¶ 53. Message queue server device 410 includes communication component 408, topic set 430, and topic queues 432. *Id.* ¶ 54. Live data server device 450 includes live data server communication component 418 that allows live data server device 450 to receive live data and transmit it to message queue server device 410. *Id.* ¶ 55. Live data server device 450 also includes topic decoder 420, topic set 440, and topic queues 442. *Id.* ¶ 56.

3. Herzog (Exhibit 1015)

Herzog is titled "Time Synchronization of Video and Data Inside a Mobile Device," and discloses a mobile device including a processor configured to receive and format live video data, audio data, and meta-data for display on the mobile device, and synchronize selected meta-data with

the video and audio for simultaneous display. Ex. 1015, codes (54), (57). Figure 4 of Herzog, reproduced below shows a system 40 that provides communications for mobile devices. *Id.* ¶¶ 9, 43.

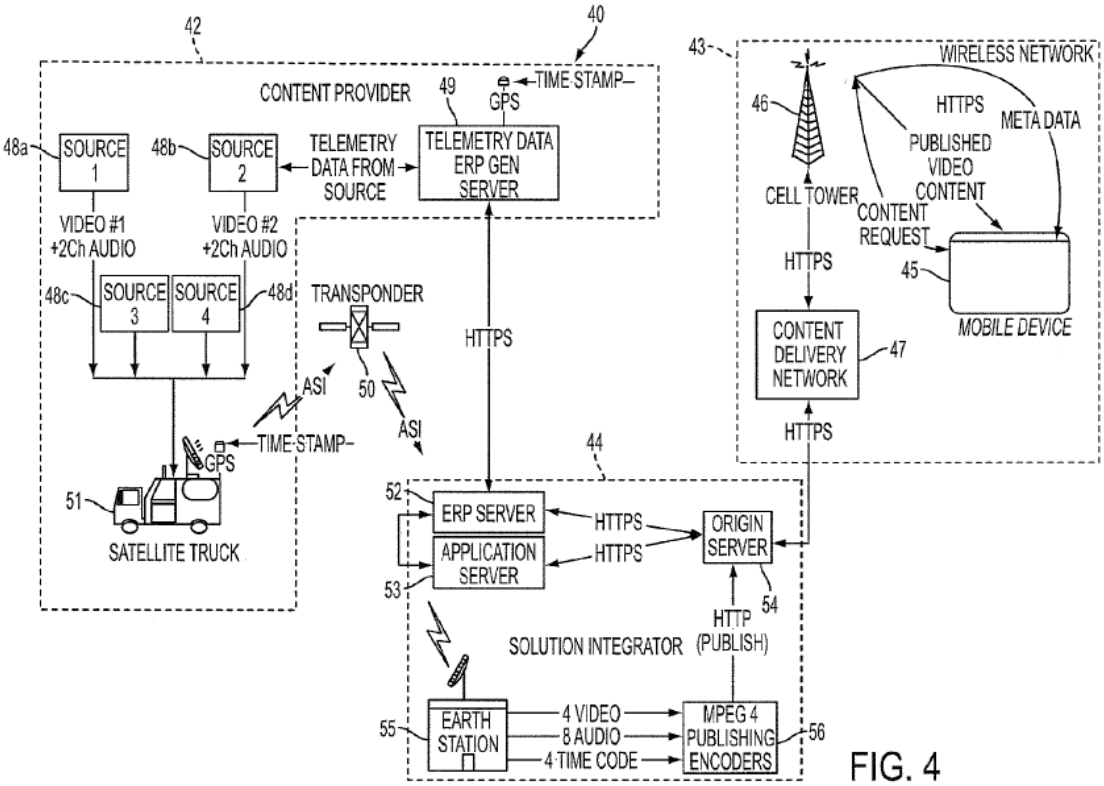

Figure 4 shows system 40 that provides communications to exemplary mobile device 45. *Id.* ¶¶ 9, 43.

As shown in Figure 4, system 40 provides communications to mobile device 45 in wireless network 43 via content delivery network 47. *Id.* ¶ 43. System 40 includes content provider 42, which provides video and audio data of an event occurring in real time, along with meta-data. *Id.* ¶ 45. Content provider 42 provides video/audio streams from imaging sources 48*a*–48*d*. *Id.* ¶ 46. Content provider 42 also includes an Enhanced Result Protocol (ERP) generator server 49 configured to receive meta-data from imaging sources 48*a*–48*d*. *Id.* ¶ 47. ERP generator server 49 extracts meta-data parameters that may be of interest to a user, formats the extracted meta-

data into an HTTPS protocol, and transmits the formatted meta-data to solution integrator 44. *Id.* Solution integrator 44 transmits the video/audio stream and meta-data to content delivery network 47 for delivery to mobile device 45. *Id.* ¶¶ 48–51.

E. Asserted Obviousness over Ellis and Spivey (Ground 1A)

Petitioner asserts that claims 1 and 7–9 are unpatentable as obvious over Ellis and Spivey. Pet. 17–48. Patent Owner disputes Petitioner's showing for independent claim 1. Prelim. Resp. 22–46.

1. Independent Claim 1 (Ground 1A)

a) Motivation to Combine

Petitioner's proposed combination of the teachings of Ellis and Spivey involves substituting Spivey's server devices that use websocket connection technology for Ellis's HTTP server. Pet. 17–20 (citing, e.g., Ex. 1001 ¶¶ 106–115; Ex. 1016 ¶¶ 39–41, Fig. 1; Ex. 1017, Fig. 4). In particular, Petitioner argues that a person of ordinary skill in the art would have replaced Ellis's supplemental content source 120 with Spivey's live data server device 450 and message queue server device 410, such that data would have been delivered using a websocket connection instead of HTTPS. *Id.* at 18–20 (citing, e.g., Ex. 1001 ¶¶ 106–115; Ex. 1016 ¶¶ 39–41, 156, Fig. 1; Ex. 1017 ¶¶ 27–28, code (57), Fig. 4). Ellis describes that its supplemental content source 120 provides real-time data feeds with sports-related information, such as sports scores. *See, e.g.*, Ex. 1016 ¶ 41. Similarly, Spivey describes that its system including live data server device 450 and message queue server device 410 provides live event data, such as sports scores. *See, e.g.*, Ex. 1017 ¶ 27, Fig. 4.

Petitioner makes four arguments in support of its position that a person of ordinary skill in the art would have made its proposed combination. Pet. 17–22. First, Petitioner argues that its proposed combination would have been made to improve latency issues in Ellis's system. *Id.* at 17–21. Second, Petitioner argues that Ellis and Spivey relate to the same subject matter and the references solve the same or similar problems. *Id.* at 20. Third, Petitioner argues that a person would have motivated because Spivey provides a complementary solution to Ellis and describes the details of a backend architecture for transmitting event data to multiple users. *Id.* at 20–21. Fourth, Petitioner argues that its proposed combination would have been obvious because it "would have required only the simple substitution of known elements to obtain predictable results." *Id.* Petitioner takes the position that these same arguments support that a person of ordinary skill in the art would have had a reasonable expectation of success. *Id*. at 20–21.

Patent Owner makes three arguments in support of its position that Petitioner has not shown that a person of ordinary skill in the art would have combined the teachings of Ellis and Spivey. Prelim. Resp. 23–35. First, Patent Owner argues that Petitioner's proposed combination is inoperable and departs from the express teachings of Ellis because Petitioner's proposed combination removes Ellis's supplemental content source 120 having database 122 and replaces it with "Spivey's database-less system." *Id.* at 23–26. Second, Patent Owner argues Petitioner's reasons do not "withstand scrutiny" in part because of differences in the references' teachings and because Petitioner does not show a person of ordinary skill in the art would have had a reasonable expectation of success. *Id.* at 26–31.

Third, Patent Owner argues Petitioner relies on impermissible hindsight bias to "reconstruct the invention" from "cherry-picked" prior art teachings. *Id.* at 31–35.

For the reasons given below, we find that Petitioner's arguments are supported by the evidence in the preliminary record before us at this early juncture and that Patent Owner's arguments do not undermine Petitioner's showing. For instance, Petitioner's first argument, that its proposed combination would have been made to improve latency issues in Ellis's system (Pet. 17–21), is supported by Spivey's disclosure that its techniques "may reduce . . . delay [on the order of seconds (e.g., 30 to 45 seconds) or minutes] to an order of milliseconds (ms) (e.g., 100 ms) or less, providing a significant advantage over the conventional practices." Ex. 1017 ¶ 28. Spivey also discloses pushing data "to the subscribed connected client devices substantially simultaneously with the message queue server receiving the topic entry from a live data source, e.g., with a time delay of 100 milliseconds or less," which Spivey discloses is "at least two orders of magnitude shorter than conventional time periods of legacy devices." *Id.* ¶ 96*; see also id.* at code (57) (disclosing pushing "the topic entry to a subscribed client device substantially simultaneously with the message queue server receiving the topic entry from a live data source").[5]

[5] Petitioner's position is also supported by the testimony of Dr. Wicker that "[w]ebsockets protocol was an emerging technology that offered particular benefits for low-latency streaming when compared to the existing communication protocols" and that a person of ordinary skill in the art "would have appreciated the benefits associated with the websocket connection" described in Spivey. Ex. 1001 ¶ 110 (citing Ex. 1017 ¶¶ 43, 61, 74, 92; Ex. 1046, 46). An article cited by Dr. Wicker provides further evidentiary support for Petitioner's position and Dr. Wicker's testimony.

Petitioner's second, third, and fourth arguments and arguments relating to reasonable expectation of success (Pet. 20–21) also are supported by the evidence in the preliminary record showing the similarity between, and complementary nature of, the Ellis and Spivey disclosures of providing content delivery for real-time events quickly to multiple users. *See, e.g.*, Ex. 1016, code (57) (describing "[s]ystems and methods for enhanced sports-related media content access and display"), ¶ 39 (describing that in system 100 "[u]ser equipment device 102 receives content . . . from content source 120 and/or supplemental content source 120 over communications paths 150 and 152, respectively" and "[a]ny suitable number of users may have one or more user equipment devices, such as user equipment 102"), ¶ 40 (describing that "[c]ontent source 130 may be any suitable source of media content" such as the "Internet or network media/web server" and that "[m]edia content" includes "broadcast programming," "news," "newsgroups," and "chat rooms"), ¶ 41 (describing that "[s]upplemental content source 120 may be any suitable content source configured to provide real-time sports scores and game summary information . . . [and] sports commentary" as well as other "sports-related information" via "a plurality of real-time data feeds"); Ex. 1017, code (57) (describing "[a]n apparatus to broadcast live event data in real-time" that receives "a topic entry from a message queue server" and pushes "the topic entry to a subscribed client device substantially simultaneously with the message queue server receiving the topic entry from the live data source"), ¶ 27 (describing techniques for

---

Ex. 1046, 46 (describing that the "WebSocket protocol enables full-duplex connection between a client and a remote host over a single TCP socket" and provides "three-to-one reduction in latency against half-duplex HTTP polling applications").

broadcasting "media content in real-time" and that the "media content may comprise, for example, data from a live event (e.g., news event, a gaming event, sporting event, etc.)" and that "live event data (e.g., sports scores and breaking news)" also is broadcasted), ¶ 34 (describing "system 100 for broadcasting live data in real-time" that includes "client devices 110-1 through 110-a").

Petitioner's second, third, and fourth arguments and arguments relating to reasonable expectation of success (Pet. 20–21) also are supported by the evidence in the preliminary record showing that Ellis and Spivey both disclose that content is provided over the Internet. For instance, Ellis describes that "[c]ontent source 130 and supplemental content source 120 may be configured to transmit signals to user equipment 102 over any suitable communication paths 150 and 152" (Ex. 1016 ¶ 45) and that, in certain embodiments, content is delivered "on a particular network address (e.g., multicast address) on which an IP socket is currently joined." Ex. 1016 ¶¶ 45, 74. Also, Spivey describes "[a]n apparatus to broadcast live event data in real-time" that receives "a topic entry from a message queue server" and pushes "the topic entry to a subscribed client device substantially simultaneously with the message queue server receiving the topic entry from the live data source" and that the subscribed client device receives data over "a websocket connection." Ex. 1017, code (57) ¶¶ 43, 61, 74, 92; Ex. 1001 ¶ 110.

On the other hand, at this preliminary stage, we find that Patent Owner's arguments (Prelim. Resp. 23–35) and Dr. Rubin's testimony (Ex. 2001 ¶¶ 106, 167–171, 176, 188, 190–194, 197–202, 207–220) are inconsistent with certain evidence in the preliminary record that supports

Petitioner's position. For example, Patent Owner's first argument (Prelim. Resp. 23–26) and Dr. Rubin's related testimony (Ex. 2001 ¶¶ 167–171, 176, 188, 190–192, 197–198, 208, 215), that Petitioner's proposed combination is inoperable and departs from the express teachings of Ellis because Petitioner's proposed combination removes database 122 and replaces it with "Spivey's database-less system," is not consistent with evidence that Spivey discloses sources of data for transmission to client devices. For instance, Spivey discloses "data feeds" that are "generated by computing devices associated with a live event" and "data gathered by human observers of a live event and entered into an interface that communicates the gathered data." Ex. 1017 ¶ 37. Also, Spivey describes "broadcasting live data in real-time" (*id.* ¶ 34) and receiving "live data in the form of a topic entry," which may include "a score, a play, an error, an injury, a player-at-bat" when "the live event is a sporting event" (*id.* ¶ 48). Additionally, Ellis describes database 122 as optional stating that "sports-related information *may be* stored in database 122." Ex. 1016, Fig. 1, ¶ 42 (emphasis added).

Patent Owner also argues the proposed combination would be inoperable because Spivey's teachings "are not tied to video delivery" and Petitioner does not address "how immediately pushed data could somehow be throttled or gated in a manner to synchronize with any associated television programming." Prelim. Resp. 24–25. Patent Owner's argument (*id.*) and Dr. Rubin's related testimony (Ex. 2001 ¶¶ 167–168, 197–198, 208) are not consistent with evidence that Spivey describes its teachings as associated with broadcasting a live event. For example, Spivey's system 100 broadcasts "live data in real-time" and includes "a subscription component . . . to receive a topic entry from a message queue server, and to push the

topic entry to a subscribed client device." Ex. 1017, code (57), ¶ 31. Spivey also describes that its live data sources are "associated with a live event." *Id.* ¶ 37; *see also id.* ¶ 48 (describing that the topic entry "may include any media information about at least one of a live event (e.g., new, game, sport, activity, and so forth)"). Additionally, claim 1 requires only "first event information germane to a first live sporting event" and does not recite that the first event information must be gated or synchronized with the first live sporting event; thus, this argument is not commensurate with the scope of claim 1.

On the present record, Patent Owner's arguments of differences in the reference teachings and its arguments that Petitioner does not show a person of ordinary skill in the art would have had a reasonable expectation of success (Prelim. Resp. 26–31), and Dr. Rubin's testimony related to these arguments (Ex. 2001 ¶¶ 171, 190, 197–202, 207–216, 220), appear to be based on incorrect characterizations of the evidence of record. For instance, Patent Owner argues that "Petitioner manufactures a data latency problem in Ellis, without any explanation as to why a POSITA would understand one to exist." Prelim. Resp. 27; Ex. 2001 ¶ 211. But Spivey describes that its techniques reduce latency, "providing a significant advantage over the conventional practices." Ex. 1017 ¶ 28; *see also id.* ¶ 96 (describing improvements of "at least two orders of magnitude" as compared to "conventional time periods of legacy devices"). Patent Owner's arguments that Ellis pertains to "viewing and tuning" and that Spivey is not relevant to "how sports viewers commonly watch and interact with displayed sporting events" (Prelim. Resp. 27–29), as well as Dr. Rubin's related testimony (Ex. 2001 ¶¶ 171, 190, 215–216), are based on only a subset of the teachings

of both references, rather than the teachings of the references in their entirety. For example, Ellis describes providing real-time data such as sports scores (*see, e.g.*, Ex. 1016 ¶ 41), and Spivey describes, for example, that its live data feeds are generated by computing devices associated with a live event (Ex. 1017 ¶ 37), as discussed above. We must consider the teachings of the references as a whole, from the perspective of an ordinarily skilled artisan. *See Sundance, Inc. v. DeMonte Fabricating Ltd.*, 550 F.3d 1356, 1361 n.3 (Fed. Cir. 2008) ("What a prior art reference discloses or teaches is determined from the perspective of one of ordinary skill in the art."); *In re Hedges*, 783 F.2d 1038, 1041 (Fed. Cir. 1986) (noting that when evaluating claims for obviousness, "the prior art as a whole must be considered").

We turn to Patent Owner's argument that the teachings of the references are not complementary because Petitioner does not address differences in the references and Petitioner does not show a person of ordinary skill in the art would have had a reasonable expectation of success (Prelim. Resp. 26–31) and Dr. Rubin's related testimony (Ex. 2001 ¶¶ 171, 190, 197–202, 207–216, 220). Patent Owner's argument and Dr. Rubin's testimony appear to be contradicted by the cited teachings of the references. As discussed above, both references disclose providing content delivery for real-time sporting events quickly to multiple users over the Internet. *See, e.g.*, Ex. 1016, code (57), ¶¶ 39–41, 45, 74; Ex. 1017, code (57), ¶¶ 27, 34. Patent Owner's characterizations again are not based on the teachings of the references considered as a whole, from the perspective of an ordinarily skilled artisan. *See Sundance*, 550 F.3d at 1361 n.3; *Hedges*, 783 F.2d at 1041.

Patent Owner's remaining arguments that Petitioner relies on impermissible hindsight bias to "reconstruct the invention" from "cherry-picked" prior art teachings (Prelim. Resp. 31–35) and Dr. Rubin's related testimony (Ex. 2001 ¶¶ 168–171, 210–213, 217–219) are premised on many of the same arguments we find unpersuasive at this stage. As discussed above, Petitioner's argument that its proposed combination would have been made to improve latency issues in Ellis's system (Pet. 17–21) is supported by Spivey's disclosures. Spivey describes, for example, that "the data payload of the topic entry may be pushed to the subscribed connected client devices substantially simultaneously with the message queue server receiving the topic entry from a live data source, e.g., with a time delay of 100 milliseconds or less." Ex. 1017 ¶ 96. As shown in Figure 1 of Spivey, live data source(s) 140 is connected to client devices 110-1 through 110-a via message queue server 120 and live data access server 130. *Id.* at Fig. 1. Spivey describes that Figure 4 illustrates an embodiment of message queue server 120. *Id.* ¶ 53. Thus, based on the preliminary record before us at this juncture, we find that Petitioner's proposed substitution of message queue server device 410 and live data server device 450 into Ellis is consistent with Petitioner's rationale to combine the teachings of Ellis and Spivey, which is to reduce latency.

We find based on the preliminary record before us that Petitioner provides sufficient rationale to combine the teachings of Ellis and Spivey for purposes of institution. We also find that Petitioner has shown sufficiently for purposes of institution that a person of ordinary skill in the art would have had a reasonable expectation of success.

b) Objective Indicia of Non-Obviousness

Patent Owner asserts that objective indicia of non-obviousness support its position that Petitioner has not shown a reasonable likelihood of unpatentability of the challenged claims. *See* Prelim. Resp. 61–71. Specifically, Patent Owner asserts long-felt need, industry praise, Petitioner's praise and copying of the claimed invention, and commercial success support Patent Owner's position.

To accord substantial weight to objective evidence of nonobviousness, the evidence must have a nexus to the claims. *Fox Factory, Inc. v. SRAM, LLC*, 944 F.3d 1366, 1373 (Fed. Cir. 2019). "A showing of nexus can be made in two ways: (1) via a presumption of nexus, or (2) via a showing that the evidence is a direct result of the unique characteristics of the claimed invention." *Volvo Penta of the Americas, LLC v. Brunswick Corp.*, 81 F.4th 1202, 1210 (Fed. Cir. 2023). A patentee is entitled to a presumption of nexus "when the patentee shows that the asserted objective evidence is tied to a specific product and that product 'embodies the claimed features, and is coextensive with them.'" *Fox Factory*, 944 F.3d at 1373 (quoting *Polaris Indus., Inc. v. Arctic Cat, Inc.*, 882 F.3d 1056, 1072 (Fed. Cir. 2018)). As discussed below, Patent Owner has not shown nexus between the challenged claims and its asserted objective indicia of non-obviousness.

Starting with Patent Owner's arguments regarding praise and copying, we find that Patent Owner's arguments are conclusory based on the record at this early juncture. Patent Owner does not discuss a specific product or show that it embodies and is coextensive with the claimed features, nor does Patent Owner show that the evidence is a direct result of unique characteristics of the claimed invention. Although Patent Owner alleges copying, Patent Owner does not name a particular product of Petitioner's

that allegedly copied Patent Owner's products. *See* Prelim. Resp. 66–67. Rather, Patent Owner merely cites to a 62-page infringement claim chart from the related parallel proceeding. *Id.* at 67 (citing Ex. 2001 ¶¶ 315–317; Ex. 2018). Patent Owner is reminded that "[a]rguments must not be incorporated by reference from one document into another document." 37 C.F.R. § 42.6(a)(3). At this stage, we decline to "play archeologist with the record" in order to understand Patent Owner's arguments, which "is precisely what the rule against incorporation by reference was intended to prevent." *Gen. Access Sols., Ltd. v. Sprint Spectrum L.P.*, 811 F. App'x 654, 657–58 (Fed. Cir. 2020). Further, Dr. Rubin's testimony relied on by Patent Owner merely states that he "understand[s] that Patent Owner contends that the Petitioner launched its own sport's streaming platform and incorporated the claimed invention into its own products." Ex. 2001 ¶ 316. He does not appear to have developed his own opinion regarding Petitioner's products. *Id.*

Dr. Rubin's testimony also relies on short e-mails including one regarding Patent Owner's work "around sports broadcast with social commentators, graphics and real time chat." Ex. 2001 ¶¶ 315–317 (citing Exs. 2016, 2017). Based on the record at this early juncture, we find that these emails alone do not support sufficiently that Petitioner had access to a patented product. For these reasons, and based on the present record, we accord Patent Owner's evidence of copying little to no weight.

Finally, Patent Owner's remaining arguments regarding nexus are limited to conclusory assertions and incorrect, over-simplified characterizations of the claimed technology. Prelim. Resp. 61–71. These

arguments fail to establish an adequate nexus to the claims of the ’697 patent.

Patent Owner’s evidence does not establish *long felt* and *unsolved* need, describing “[b]roadcast latency [being] recognized by stream platforms around [the] mid-2010s” and citing an article from 2015, while the ’697 patent claims priority to provisional applications filed in 2016 and 2017. Ex. 2001 ¶ 73; Ex. 2035; Prelim. Resp. 62; Ex. 1006, code (60), 1:20–40. Certain of Patent Owner’s industry praise evidence does not appear to be disinterested. For example, Patent Owner quotes former NBA commissioner David Stern, but the articles cited describe Mr. Stern as “one of SportsCastr.Live’s high-profile partners” and “a founding investor.” Ex. 2007, 2; Ex. 2008, 1; Prelim. Resp. 65. Patent Owner acknowledges that commercial success would be shown by significant sales of the patented product but does not cite any evidence of such significant sales. Prelim. Resp. 67–71 (citing *Ormco Corp. v. Align Technology, Inc.*, 463 F.3d 1299, 1311–12 (Fed. Cir. 2006).

Accordingly, on the present record, we are not persuaded that Patent Owner has demonstrated a nexus between the challenged claims and the asserted objective evidence of non-obviousness, and we additionally find certain of Patent Owner’s evidence of objective indicia of non-obviousness to be flawed or incompletely developed.

For the above reasons, we do not accord substantial weight to Patent Owner’s objective evidence at this stage.

> *c) Preamble 1.0: “A system for providing a first plurality of copies of a first broadcaster's live stream of digital content including first live sporting event video-based commentary from a first broadcaster client device to a first plurality of viewer client devices, and for*

> *providing a second plurality of copies of a second broadcaster's live stream of digital content including second live sporting event video-based commentary from a second broadcaster client device to a second plurality of viewer client devices, the system comprising"*

Petitioner argues to the extent the preamble is limiting, Ellis discloses the preamble. Pet. 22–24 (citing, e.g., Ex. 1016, code (57), ¶¶ 8, 11, 40, 45, 62–63, 74, Fig. 2B; Ex. 1001 ¶¶ 545–546, 564).[6] Petitioner relies on Ellis's disclosure of providing "enhanced information access and viewing functionality for sports-related programming," as well as Ellis's disclosure that sports-related programming includes "a sporting event, sports news, or sports commentary." *Id.* at 22 (quoting Ex. 1016 ¶¶ 8, 11). Petitioner argues that Ellis teaches the preamble because Ellis discloses a system providing multiple live broadcasts, shown in Figure 2B, and that users can select which content to receive. *Id.* at 23 (citing Ex. 1016 ¶¶ 62–63, Fig. 2B).

Figure 2B of Ellis is reproduced below.

[6] We need not decide at this stage whether the preamble is limiting.

220

Tuner (222)	Primary Source ID (224)
1	<sourceid_2>
2	<sourceid_1>
3	<sourceid_8>
4	<sourceid_4>

230

Source ID (232)	Type (234)	Profile Score (236)
<sourceid_1>	Game	90
<sourceid_2>	Game	95
<sourceid_3>	Commentary	45
<sourceid_4>	News	75
<sourceid_5>	Movie	25
<sourceid_6>	Movie	35
<sourceid_7>	Highlights	65
<sourceid_8>	Game	80

FIG. 2B

Figure 2B illustrates tuner data tables 220 and 230 that are stored in memory 214 of control circuitry 110 (not shown in Figure 2B) that associate each of four tuners in column 222 with a primary sporting event or other sports-related content shown in source identifier column 224. Ex. 1016 ¶¶ 62–63, Fig. 2B.

Ellis discloses that "one sporting event is designated as the primary sporting event" and "[o]ne or more sporting events other than the primary sporting event may be designated as secondary sporting events." *Id.* ¶ 62. Ellis also discloses that "[t]he user may change or swap primary and/or secondary sporting events at any time." *Id.* Ellis also discloses "[a]ny suitable number of users may have one or more equipment devices, such as user equipment 102." *Id.* ¶ 39.

Patent Owner does not specifically contest Petitioner's showing for the preamble of claim 1. *See* Prelim. Resp. 22–61 (presenting argument contesting only Petitioner's assertions as to limitation 1.8 and Petitioner's asserted motivation to combine Ellis and Spivey). Petitioner's contentions

are supported by the cited portions of Ellis. After consideration of the contentions and the evidence of record at this early stage, we find that Petitioner has shown sufficiently that Ellis teaches the preamble of claim 1 for purposes of institution.

d) Limitation 1.1: "A) a plurality of media sources to"

Petitioner argues that Ellis teaches limitation 1.1. Pet. 24–25 (citing e.g., Ex. 1016 ¶¶ 39–41, 45, 47, Fig. 1; Ex. 1001 ¶ 547). Petitioner argues that Ellis teaches limitation 1.1 because Ellis discloses content sources that are "any suitable source of media content" such as a "Internet or network media/web server, or any other suitable facility or system for originating or distributing passive or interactive content to user equipment 102." Pet. 24 (quoting Ex. 1016 ¶ 40).

Figure 1 of Ellis, relied on by Petitioner for limitation 1.1, is reproduced below.

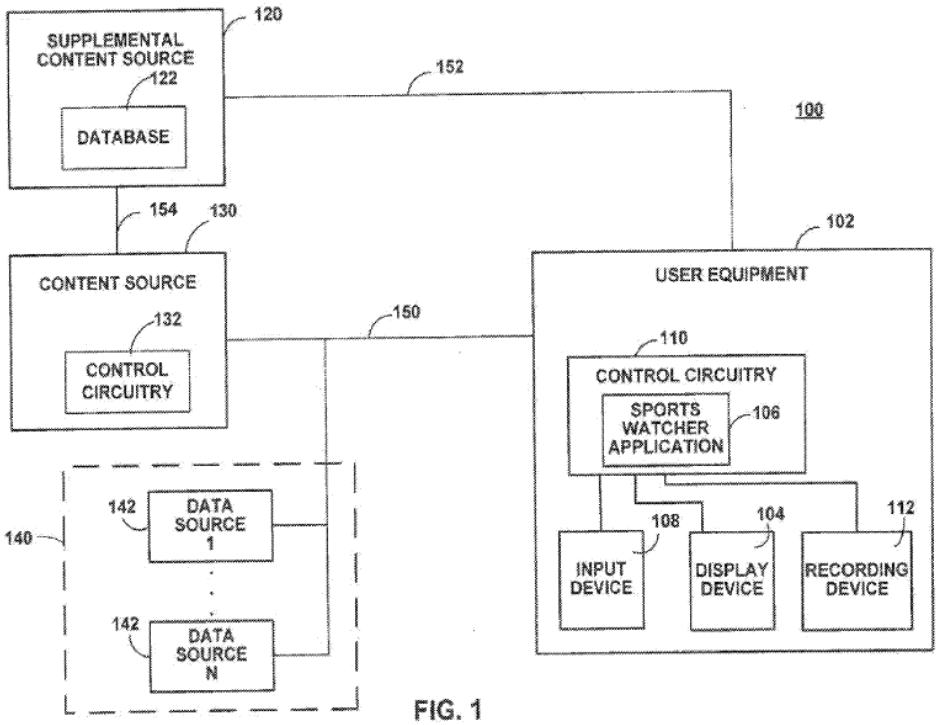

Figure 1 is a block diagram illustrating interactive media system 100. Ex. 1016 ¶¶ 15, 39.

Figure 1 shows interactive media system 100, which includes content source 130, as well as user equipment 102, supplemental content source 120, and data sources 140. *Id.* ¶ 39. Ellis describes that "[m]edia content that may be provided by content source 130 to user equipment 102 includes broadcast programming," "news," "newsgroups," "chat rooms," and "any other content capable of being displayed by, presented to, recorded, or interacted with, using user equipment 102." *Id.* ¶ 40. Furthermore, Ellis describes with respect to Figure 1, "although in practice there may be numerous instances of content source 130 and supplemental content source 120, for clarity only one instance of each source has been shown in the example of FIG. 1." *Id.* ¶ 39.

Patent Owner does not specifically contest Petitioner's showing for limitation 1.1. *See generally* Prelim. Resp. 22–61. Petitioner's contentions are supported by the cited portions of Ellis. After consideration of the contentions and the evidence of record at this early stage, we find that Petitioner has shown sufficiently that Ellis teaches limitation 1.1 for purposes of institution.

e) Limitation 1.2: "receive the first broadcaster's live stream of digital content and the second broadcaster's live stream of digital content"

Petitioner argues that Ellis teaches limitation 1.2. Pet. 25–26 (citing, e.g., Ex. 1016 ¶¶ 40, 45, 61, 62, 74; Ex. 1001 ¶ 548). Petitioner argues that Ellis teaches limitation 1.2 because Ellis discloses "that a user may 'actively watch one or more sporting events,' and the user 'may change or swap primary and/or secondary sporting events at any time.'" *Id.* at 26 (quoting Ex. 1016 ¶¶ 61–62).

As discussed with respect to limitation 1.1 (§ III.E.1.d), Ellis describes that "[m]edia content" includes "broadcast programming," "news," "newsgroups," "chat rooms," and "any other content capable of being displayed by, presented to, recorded, or interacted with, using user equipment 102." Ex. 1016 ¶ 40. As discussed with respect to the preamble (§ III.E.1.c), Ellis discloses a "primary sporting event" and "secondary sporting events." Ex. 1016 ¶ 62.

Patent Owner does not specifically contest Petitioner's showing for limitation 1.2. *See* Prelim. Resp. 22–61. Petitioner's contentions are supported by the cited portions of Ellis. After consideration of the contentions and the evidence of record at this early stage, we find that

Petitioner has shown sufficiently that Ellis teaches limitation 1.2 for purposes of institution.

f) Limitations 1.3 and 1.4

Limitations 1.3 and 1.4 are reproduced below.

> [1.3] provide a first copy of the first plurality of copies to a first viewer client device of the first plurality of viewer client devices via a first video Internet communication channel between the plurality of media sources and the first viewer client device of the first plurality of viewer client devices; and
>
> [1.4] provide a first copy of the second plurality of copies to a first viewer client device of the second plurality of viewer client devices via a second video Internet communication channel between the plurality of media sources and the first viewer client device of the second plurality of viewer client devices.

Ex. 1006, 57:35–46.

Petitioner argues that Ellis teaches limitations 1.3 and 1.4. Pet. 26–28 (citing, e.g., Ex. 1016 ¶¶ 39, 40, 45, 48, 55, 61, 62, 74, 94, 132, Fig. 2B; Ex. 1001 ¶¶ 549–553). Petitioner argues that Ellis teaches "a first copy of the *first* plurality of copies to a first viewer client device of the *first* plurality of viewer client devices" and "a first copy of the *second* plurality of copies to a first viewer client device of the *second* plurality of viewer client devices"[7] because "Ellis discloses an 'interactive media system' where 'any suitable number of users' may 'select any game from the listing' of 'available games' to 'watch the selected game.'" *Id.* at 26 (quoting Ex. 1016 ¶ 39, 94). Petitioner argues that Ellis describes providing the copies "via a first video Internet communication channel" and "via a second video

[7] Emphases have been added to show how recitations are different.

Internet communication channel," as recited in limitations 1.3 and 1.4, respectively, because Ellis describes exemplary content sources as an "internet or network media/web server" and Ellis describes "[f]or IPTV, tuned content may include content to be delivered on a particular network address (e.g., multicast address) on which an IP socket is currently joined." *Id.* at 27 (quoting Ex. 1016 ¶¶ 40, 48, 74).

Patent Owner does not specifically contest Petitioner's showing for limitations 1.3 and 1.4. *See generally* Prelim. Resp. 22–61. Petitioner's contentions are supported by the cited portions of Ellis. After consideration of the contentions and the evidence of record at this early stage, we find that Petitioner has shown sufficiently that Ellis teaches limitations 1.3 and 1.4 for purposes of institution.

> *g) Limitation 1.5: "B**)** a control server to periodically retrieve, via the Internet and from an event information provider, first event information germane to a first live sporting event, wherein the first event information includes first score information for the first live sporting event"*

Petitioner argues that each of Ellis and Spivey teaches limitation 1.5. Pet. 28–32 (citing, e.g., Ex. 1016 ¶¶ 41, 42, 72, 117, 142, Fig. 1; Ex. 1017 ¶¶ 27, 35, 37, 48, 55, 66, 178, Fig. 4; Ex. 1001 ¶¶ 554–556). Petitioner argues that Ellis's supplemental content source 120 teaches limitation 1.5. *Id.* at 28–30 (citing ¶¶ 42, 72, 117, 142, Fig. 1; Ex. 1001 ¶ 555). Petitioner, alternatively, argues that Spivey's live data server device 450 teaches limitation 1.5. *Id.* at 30–32 (citing Ex. 1017 ¶¶ 27, 35, 37, 48, 55, 66, 178, Fig. 4; Ex. 1001 ¶ 556).

As discussed above with respect to Petitioner's motivation to combine (*see* § III.E.1.a), Petitioner's proposed combination of the teachings of Ellis and Spivey involves replacing Ellis's supplemental content source 120 with Spivey's live data server device 450 and message queue server device 410, such that data would have been delivered using a websocket connection instead of HTTPS. *Id.* at 18–20 (citing, e.g., Ex. 1001 ¶¶ 106–115; Ex. 1016 ¶¶ 39–41, 156, Fig. 1; Ex. 1017 ¶¶ 27–28, code (57), Fig. 4). At this juncture, therefore, we rely on only Petitioner's arguments that Spivey teaches limitation 1.5. Petitioner's contentions are supported by the cited portions of Spivey.

Patent Owner does not specifically contest Petitioner's showing for limitation 1.5. *See generally* Prelim. Resp. 22–61. After consideration of the contentions and the evidence of record at this early stage, we find that Petitioner has shown sufficiently that Spivey teaches limitation 1.5 for purposes of institution. Also, we find that Petitioner provides sufficient rationale to combine the teachings of Ellis and Spivey for purposes of institution. *See* § III.E.1.a.

h) Limitation 1.6: "C) at least one socket server communicatively coupled to the control server to"

Petitioner argues that the combination of Ellis and Spivey teaches limitation 1.6. Pet. 32–35 (citing, e.g., Ex. 1016 ¶¶ 39–41, 47, Fig. 1; Ex. 1017 ¶¶ 35, 45–47, 52–55, 96, Figs. 3, 4; Ex. 1001 ¶¶ 557–558). Petitioner argues that Spivey's message queue server device 410 "discloses a socket server communicatively coupled to a control server." *Id.* at 35. To illustrate its proposed combination, Petitioner provides an annotated, combined diagram of Ellis's Figure 1 and Spivey's Figure 4, which is reproduced below. Pet. 19.

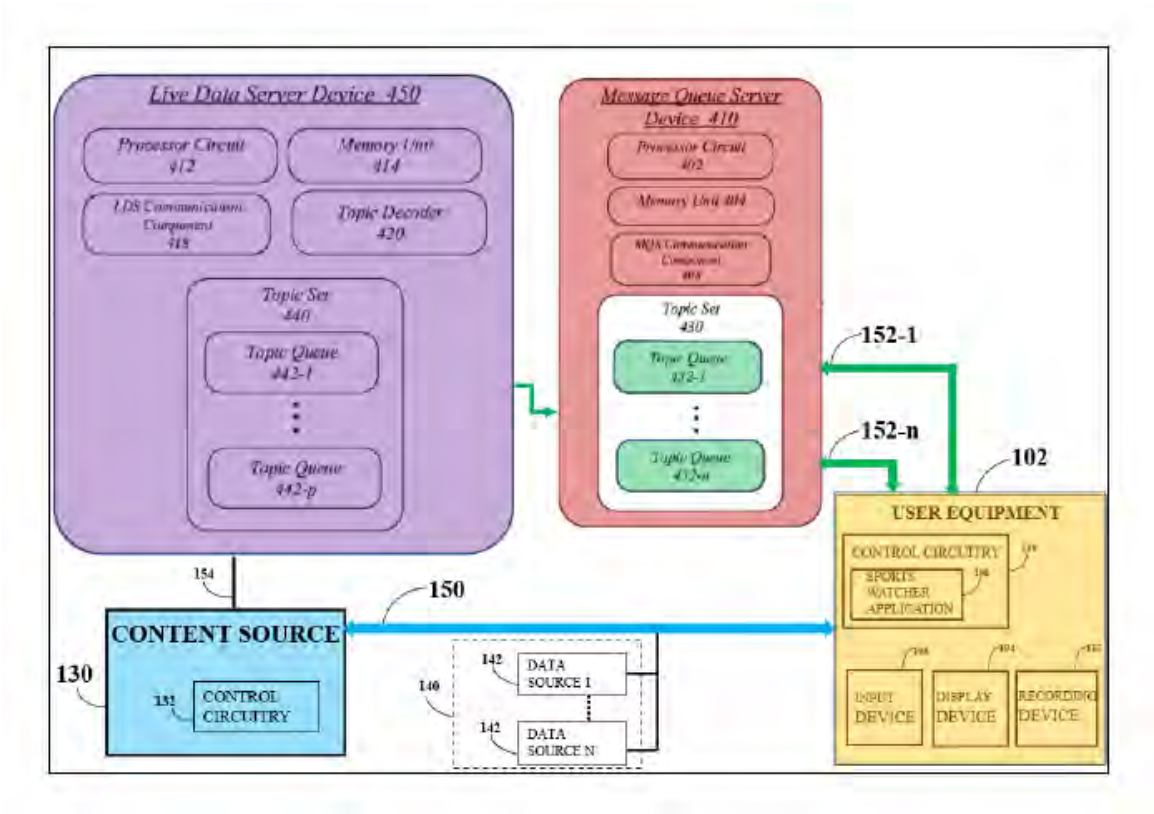

Petitioner's annotated diagram, above, illustrates, among other things, a combined diagram comprising Ellis's content source 130 and user equipment 102 shown in Ellis's Figure 1 and Spivey's live data server device 450 and message queue server device 410 shown in Spivey's Figure 4. Pet. 19.

As shown above, Petitioner's annotated, combined diagram includes Ellis's content source 130 (highlighted in blue), which is connected via connection 150 (also highlighted in blue) to Ellis's user equipment 102 (highlighted in yellow). *Id.* Petitioner's annotated, combined diagram also includes Spivey's data server device 450 (highlighted in purple), which is connected via connection 154 to content source 130 and also is connected via a connection illustrated as an arrow in Spivey's Figure 4 (highlighted in green) to Spivey's message queue server device 410 (highlighted in red). *Id.* Petitioner's annotated, combined diagram also shows that Spivey's message

queue server device 410 (highlighted in red) is connected via green arrows labeled 152-1 and 152-n to Ellis's user equipment 102. *Id.*[8]

As discussed with respect to limitation 1.5 (*see* § III.E.1.g), Petitioner argues Spivey's live data server device 450 teaches "a control server." *Id.* at 30–32 (citing Ex. 1017 ¶¶ 27, 35, 37, 48, 55, 66, 178, Fig. 4; Ex. 1001 ¶ 556). For limitation 1.6, Petitioner argues that Spivey's message queue server device 410 teaches "at least one socket server communicatively coupled to the control server." *See, e.g.*, *id.* at 35.

Patent Owner does not specifically contest Petitioner's showing for limitation 1.6. *See* Prelim. Resp. 22–61. Petitioner's contentions are supported by the cited portions of Ellis and Spivey. After consideration of the contentions and the evidence of record at this early stage, we find that Petitioner has shown sufficiently that the combination of Ellis and Spivey teaches limitation 1.6 for purposes of institution. Also, we find that Petitioner provides sufficient rationale to combine the teachings of Ellis and Spivey for purposes of institution. *See* § III.E.1.a.

i) Limitation [1.7]: "receive from the control server at least the first score information"

Petitioner argues that the combination of Ellis and Spivey teaches limitation 1.7. Pet. 35–36 (citing, e.g., Ex. 1017 ¶¶ 55, 117, Fig. 10; Ex. 1001 ¶ 559). Petitioner argues "Spivey's LDSD (control server) 'receive[s] live data and transmit[s] the data payloads to [MQSD (socket server)].'" Pet. 35 (quoting Ex. 1017 ¶ 55; alterations by Petitioner). Petitioner also argues that Spivey teaches that "[d]ata payloads may include

[8] Herein, the highlighting we refer to in Petitioner's annotated, combined diagram is Petitioner's annotation to Figure 1 of Ellis or Figure 4 of Spivey.

'a score, a player name, a play, and so forth.'" *Id.* at 35–36 (quoting Ex. 1017 ¶ 117); *see also id.* at 36 (reproducing Figure 10 illustrating user interface 1000 displaying topic 1002 including text 1006 stating "Ravens: 14; Steelers: 7").

Patent Owner does not specifically contest Petitioner's showing for limitation 1.7. *See* Prelim. Resp. 22–61. Petitioner's contentions are supported by the cited portions of Ellis and Spivey. After consideration of the contentions and the evidence of record at this early stage, we find that Petitioner has shown sufficiently that the combination of Ellis and Spivey teaches limitation 1.7 for purposes of institution. Also, we find that Petitioner provides sufficient rationale to combine the teachings of Ellis and Spivey for purposes of institution. *See* § III.E.1.a.

> *j) Limitation [1.8]: "transmit the first score information to at least the first viewer client device of the first plurality of viewer client devices via a first event information Internet communication channel between at least one first event socket of the at least one socket server and the first viewer client device of the first plurality of viewer devices, wherein the at least one first event socket corresponds to the first event information germane to the first live sporting event"*

Petitioner argues that the combination of Ellis and Spivey teaches limitation 1.8. Pet. 36–40 (citing, e.g., Ex. 1016 ¶¶ 39–41, Fig. 1; Ex. 1017, code (57), ¶¶ 35–36, 38, 43, 46, 48–49, 51–52, 61, 66, 81–84, 96, 179, Fig. 9; Ex. 1001 ¶¶ 560–567). The dispute between the parties relates to the term "event socket." Prelim. Resp. 35–46.

For the recitation "transmit the first score information to at least *the first viewer client device of the first plurality of viewer client devices*" (emphasis added), Petitioner relies on its arguments for limitation 1.3, which

provides antecedent basis for the emphasized term. Pet. 39 (citing § VIII.A.2.d of the Petition). Petitioner also points to Spivey's disclosure of pushing data from topic queues and Ellis's disclosure of providing real-time sports scores. *Id.* (citing Ex. 1017 ¶ 46; Ex. 1016 ¶ 41; Ex. 1001 ¶ 565). Patent Owner does not dispute these arguments made by Petitioner for limitation 1.8, except to the extent discussed above with respect to Petitioner's motivation to combine. *See generally* Prelim. Resp. We find Spivey's disclosures consistent with Petitioner's arguments based on the record at this early juncture. For example, Spivey describes "push[ing] data from topic queues 332-1, 332-n to the subscribers of the topics corresponding to those topic queues." Ex. 1017 ¶ 46. Spivey also describes live event data as including, for example, "sports scores." *Id.* ¶ 27; *see also id.* ¶ 48 (describing that "the data payload [topic entry] may include, for example, a score" of a sporting event). Ellis also describes providing to user equipment 102 "real-time sports scores." Ex. 1016 ¶ 41.

For the recitation "via a first event information Internet communication channel between at least one first *event socket* of the at least one socket server and the first viewer client device of the first plurality of viewer devices" (emphasis of disputed term added), Petitioner argues that a person of ordinary skill in the art "would have understood that Spivey's topic queues disclose first event sockets." Pet. 39 (citing Ex. 1001 ¶¶ 561–564). As can be seen from Petitioner's annotated, combined diagram of Ellis's Figure 1 and Spivey's Figure 4, in Petitioner's proposed combination, topic queues 432-1 through 432-n are connected to user equipment 102 via communication paths 152-1 through 152-n. Pet. 19.

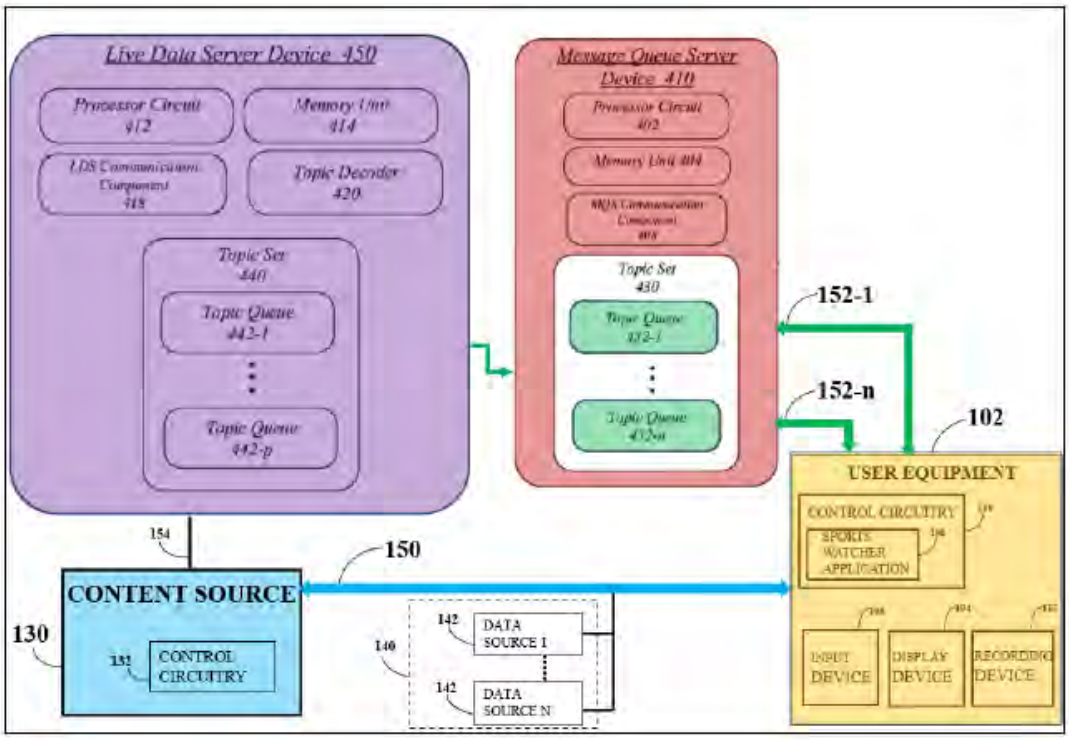

Petitioner's annotated diagram, above, illustrates, among other things, a combined diagram comprising Ellis's content source 130 and user equipment 102 shown in Ellis's Figure 1 and Spivey's live data server device 450 and message queue server device 410 shown in Spivey's Figure 4. Pet. 19.

As shown in Petitioner's annotated, combined diagram, Ellis's user equipment 102 (highlighted in yellow) is connected via communication paths 152-1 through 152-n (highlighted in green) to Spivey's message queue server device 410 (highlighted in red). *Id.* As also shown, Spivey's message queue server device 410 (highlighted in red) includes topic queues 432-1 through 432-n (highlighted in green) (*id.*), which Petitioner relies on for teaching the "*event socket*" recited in limitation 1.8. *See, e.g.*, Pet. 39.

Although Spivey's Figure 1, for example, describes that live data access server 130 is connected between message queue server 120 and client devices 110-1 through 110-a (Ex. 1017, Fig 1), Petitioner argues that its

proposed combination, in which message queue server device 410 is connected directly to Ellis's user equipment 102, is consistent with Spivey's disclosure because "Spivey also discloses that the message queue server device may be 'accessible to clients over the network directly.'" *Id.* at 37 n.7 (quoting Ex. 1017 ¶ 36; citing Ex. 1017 ¶ 84); *see also id.* (citing Ex. 1017 ¶¶ 38, 46, 81–82; Ex. 1001 ¶ 564) (providing additional explanation and reasoning to make the proposed combination).

Petitioner also argues that limitation 1.8 is taught because Spivey discloses that "client devices 'may request and participate in a websocket connection,' which 'typically comprises a two-way connection between two entities.'" *Id.* at 40 (quoting Ex. 1017 ¶¶ 43, 61). Petitioner also relies on Spivey's disclosure that message queue server device 410 comprises, for example, an "Internet server" and clients and servers communicate, for example, via "public networks such as the Internet." Ex. 1017 ¶¶ 35, 178; *see also id.* ¶ 179 (describing communicating via "a communications network," which may be "any one and the combination of wired and/or wireless networks including without limitation . . . a public network (e.g., the Internet)").

Patent Owner responds with three arguments. Prelim. Resp. 35–46. First, Patent Owner argues "Spivey does not disclose a 'websocket connection' or channel between its message queue server and client devices"; "[r]ather, Spivey discloses a websocket connection between a live data access server and client devices," which Petitioner omitted without sufficient explanation. *Id.* at 36–39 (citing, e.g., Ex. 1017 ¶¶ 43, 53–58, 61, 74, Fig. 4; Ex. 2001 ¶¶ 223, 225–234). Second, Patent Owner argues "Petitioner fails to show that Spivey's topic queues are '*event sockets*' under

Petitioner's (and its [declarant's]) implied definition, which requires them to be 'uniquely addressable communication endpoints.'" *Id.* at 39–45 (citing, e.g., Ex. 1017 ¶¶ 38–39, 46–54, 71–82, 128, 131, Fig. 7; Ex. 2001 ¶¶ 132–134, 176–180, 235–240, 246–247). Third, Patent Owner argues "Petitioner fails to articulate sufficient motivation to combine and modify the prior art." *Id.* at 45–46 (emphasis omitted).

We start with Patent Owner's first argument that "Spivey does not disclose a 'websocket connection' or channel between its message queue server and client devices"; "[r]ather, Spivey discloses a websocket connection between a live data access server and client devices," which Petitioner omitted without sufficient explanation. *Id.* at 36–39 (citing, e.g., Ex. 1017 ¶¶ 43, 53–58, 61, 74, Fig. 4; Ex. 2001 ¶¶ 223, 225–234). Dr. Wicker testifies that a person of ordinary skill in the art "would have understood Spivey to disclose a direct connection between client devices and MQSD" and that a person of ordinary skill in the art "would have used this implementation because reducing the amount of server transfers would reduce latency, which is Spivey's main purpose." Ex. 1001 ¶ 562.

In contrast, Dr. Rubin testifies

> Spivey does not, as Petitioner alleges, disclose a 'websocket connection' or channel between the message queue server (comprising the message queue server device and live data server device) and a viewer client device, nor would a POSITA have been motivated to modify the prior art teachings to achieve such a channel.

Ex. 2001 ¶ 223.

After weighing the testimony of Dr. Wicker and Dr. Rubin, based on the preliminary record, we find Dr. Wicker's testimony to be supported by the evidence of record and we, therefore, give Dr. Wicker's testimony more

weight. Although we agree with Patent Owner and the testimony of Dr. Rubin to the extent that we find Spivey discloses live data access server 130 connected to client devices 110-1 through 110-a in certain embodiments (*see, e.g.*, Ex. 1017, Fig. 1), at this early stage, we also find that Spivey teaches or at least suggests a direct connection between message queue server device 410 and client devices 110-1 through 110-a.

For example, based on the preliminary record, we find that Petitioner's arguments and Dr. Wicker's testimony are supported by Spivey's disclosure that message queue server device 410 "may be substantially similar" to message queue server device 310 (Ex. 1017 ¶ 54 (cited in Pet. 33)) and "MQS communication component 308 [included in message queue server device 310] may . . . receive requests to subscribe to topics in a topic set 330, and may push data from topic queues 332-1, 332-n *to the subscribers of the topics corresponding to those topic queues*." *Id.* ¶ 46 (emphasis added) (cited in Pet. 39). Spivey also discloses that message queue server device 410 "may be implemented as a RABBITMQ[ ] server," which is an "open source message broker software." *Id.* ¶ 58.[9] Spivey describes in that embodiment, topic queues in message queue server device 410 "push the messages *to clients that have subscribed to the topic queues*." *Id.* (emphasis added).

Spivey discloses that its message queue server "may comprise one or more electronic devices capable of receiving, processing, and sending information *for the system 100*." *Id.* ¶ 35 (emphasis added) (cited in Pet. 32,

[9] Paragraph 58 describes message queue server device 410 shown in Figure 4, which is relied on in the Petition. *See, e.g.*, Pet. 19–22, 33–35, 37 (citing, e.g., Ex. 1017 ¶¶ 51–54, Fig. 4).

33). Spivey further describes that message queue server 120 processes "live data to provide live data quickly *to the client devices 110-1 through 110-a*." *Id.* ¶ 36 (cited in Pet. 37 n.7). Spivey also discloses clients and servers communicating information with each other over, "a packet-switched network (e.g., public networks such as the Internet)." *Id.* ¶ 178 (cited in Pet. 32).

Based on the preliminary record, we also find that Petitioner's arguments and Dr. Wicker's testimony that live data access server 130 is optional are supported by Spivey. For example, Spivey discloses that "system 100 *may* include a live data access server 130." *Id.* ¶ 38 (emphasis added) (cited in Pet. 38 n.7). Live data access server is described as "a public interface." *Id.* Furthermore, based on the preliminary record at this early juncture, we find that Spivey's disclosure that "[i]n some embodiments," message queue server is not accessible to clients "directly" because it is, for example, "behind a firewall" supports that Spivey teaches or at least suggests that the firewall is optional. *Id.* ¶ 36 (cited in Pet. 37 n.7).

Regarding Patent Owner's argument that "it is unclear how Spivey's message queue server device 410, which lacks an interface through which it could communicate with client devices, could include the claimed event socket" (Prelim. Resp. 39), we find, based on the preliminary record, that Petitioner's argument and Dr. Wicker's testimony are supported by Spivey's disclosure of user interface 900 presented by live data app 210 residing on client device 200 that "allow[s] an operator 108 of a client device 110 to view and select topics of live data to subscribe to," which may comprise, for example, "the topics available from a message queue server." Ex. 1017 ¶ 84, Figs. 2, 9.

We also disagree with Patent Owner's argument that Spivey's live data access server was "omitted" without sufficient explanation. Prelim. Resp. 36. Dr. Wicker testifies in his opinion a person of ordinary skill in the art "would have used this implementation [the implementation of system 100 with a direct connection between client devices and MQSD] because reducing the amount of server transfers would reduce latency, which is Spivey's main purpose." Ex. 1001 ¶ 562. At this early juncture, we find this explanation sufficient for purposes of institution.

We next turn to Patent Owner's second argument that "Petitioner fails to show that Spivey's topic queues are '*event sockets*' under Petitioner's (and its [declarant's]) implied definition, which requires them to be 'uniquely addressable communication endpoints.'" Prelim. Resp. 39–45 (citing, e.g., Ex. 1017 ¶¶ 38–39, 46–54, 71–82, 128, 131, Fig. 7; Ex. 2001 ¶¶ 132–134, 176–180, 235–240, 246–247). As discussed above with respect to claim construction (§ III.C), Petitioner argues that "a POSA would have understood a 'socket' to be a uniquely addressable communication endpoint on a server where first event information is provided to a VCD." Pet. 37 (citing Ex. 1001 ¶ 560). Patent Owner states with respect to the term "event socket" that it "applies Petitioner's construction." Prelim. Resp. 10. At this early stage, therefore, Petitioner's proposed construction of "event socket" (Pet. 37) is not disputed by Patent Owner (Prelim. Resp. 10) and we use that construction in our analysis.

Patent Owner argues that a person of ordinary skill in the art "would have understood that Spivey's 'topic queue' is merely an organization of data, such as a database table, that includes information about a particular topic" and that "Spivey nowhere discloses or suggests that the topic queues

are 'uniquely addressable' or 'communication endpoints.'" Prelim. Resp. 40–41 (citing, e.g., Ex. 2001 ¶¶ 235–240). Dr. Rubin testifies that a person of ordinary skill in the art "would not consider such a database, message queue, or any other internal data structure by themselves to be a 'uniquely addressable communication endpoint[]' because, as disclosed in Spivey, the queues themselves lack an address through which they can communicate at all." Ex. 2001 ¶ 236. Dr. Rubin also testifies that "[t]he only potential 'communication endpoint' Spivey discloses as being 'uniquely addressable' is the live data access server." *Id.* ¶ 237.

Dr. Wicker testifies as follows:

> [I]t is my opinion that this information is provided via a connection between a topic queue and the first user equipment device. Users can access the MQSD using a URL. *See* Ex.1017 ¶¶81-82. Then, the user can access the specific topic queue she wishes to receive information from by using a text string, *e.g.*, a topic label or Event ID, associated with a topic queue. *Id.* ¶179, Fig. 9 ("Gamecenter.nfl.ravenssteelers"). Thus, it is my opinion that a POSA would have understood that Ellis in view of Spivey discloses distributing event information from a socket to a user device over an internet connection. Further, I believe a POSA would have understood that the internet connection is established using a URL and text string identifying a uniquely addressable communication endpoint on the MQSD, where first event information is transmitted to a VCD.

Ex. 1001 ¶ 567.

Based on the preliminary record, we find that Petitioner's arguments and Dr. Wicker's testimony are supported by Spivey's disclosures that an "address may resemble a uniform resource locator (URL)" and that user interface 900 "allow[s] an operator 108 of a client device to view and select . . . topics available from a message queue server." Ex. 1017 ¶¶ 82, 84, Fig. 9. Based on the preliminary record, we find that Dr. Rubin's testimony

is limited to addressing live data access server 130 and does not address sufficiently Spivey's teachings as a whole understood from the perspective of an ordinarily skilled artisan. *See Sundance*, 550 F.3d at 1361 n.3 ("What a prior art reference discloses or teaches is determined from the perspective of one of ordinary skill in the art."); *Hedges*, 783 F.2d at 1041 (noting that when evaluating claims for obviousness, "the prior art as a whole must be considered"). We, therefore, give Dr. Rubin's testimony less weight than Dr. Wicker's testimony at this preliminary stage.

We now turn to Patent Owner's third argument that "Petitioner fails to articulate sufficient motivation to combine and modify the prior art." *Id.* at 45–46 (emphasis omitted). Patent Owner repeats its arguments that we address above with respect to Petitioner's reasoning to combine. *Compare* Prelim. Resp. 45–46, *with id.* at 23–35. For the reasons discussed above, we find based on the preliminary record before us at this early juncture that Patent Owner's arguments do not undermine Petitioner's showing. *See* § III.E.1.a.

For the recitation "wherein the at least one first *event socket* corresponds to the first event information germane to the first live sporting event" (emphasis of disputed term added), Petitioner argues that this recitation is taught by Spivey's disclosure that the data payloads placed on Spivey's topic queues "relate to a specific game between two NFL teams" and include "for example, a score, a play, . . . , and so forth." Pet. 37–39 (citing, e.g., Ex. 1017 ¶¶ 48–49, 51–52, 66, Fig. 9). Patent Owner does not dispute these arguments made by Petitioner for limitation 1.8, except to the extent discussed above. *See generally* Prelim. Resp. We find Spivey's

disclosures consistent with Petitioner's arguments based on the record at this early juncture.

In summary, with respect to limitation 1.8, after consideration of the arguments and evidence of both parties at this early juncture, we find that Petitioner's contentions are supported by the cited portions of Ellis and Spivey. We find that Patent Owner's arguments do not undermine Petitioner's showing. Based on the record at this preliminary stage, therefore, we find that Petitioner has shown sufficiently that the combination of Ellis and Spivey teaches limitation 1.8 for purposes of institution. Also, we find that Petitioner provides sufficient rationale to combine the teachings of Ellis and Spivey for purposes of institution. *See* § III.E.1.a.

k) Conclusion—Claim 1 (Ground 1A)

After consideration of the arguments and the evidence of record at this early stage, we determine that Petitioner has shown sufficiently, for purposes of institution, that the combination of Ellis and Spivey teaches or suggests all recitations in claim 1. Also, we find that Petitioner provides sufficient rationale to combine the teachings of Ellis and Spivey for purposes of institution. *See* § III.E.1.a.

Based on the record at this preliminary stage, we conclude that Petitioner has demonstrated a reasonable likelihood that it would prevail in showing that claim 1 is unpatentable under 35 U.S.C. § 103 as obvious over Ellis and Spivey.

2. Dependent Claims 7–9 (Ground 1A)

Claims 7–9 depend from claim 1, either directly or indirectly. Petitioner provides a detailed analysis in support of its position that the

combination of Ellis and Spivey teaches or suggests the limitations in dependent claims 7–9. Pet. 40–48.

We have reviewed Petitioner's assertions and the evidence in support thereof. Patent Owner does not separately challenge Petitioner's analysis for the dependent claims. Based on the record at this preliminary stage, we conclude that Petitioner has demonstrated a reasonable likelihood that it would prevail in showing that claims 7–9 are unpatentable under 35 U.S.C. § 103 as obvious over Ellis and Spivey.

F. Asserted Obviousness over Ellis, Spivey, and Herzog (Ground 1B)

Petitioner asserts that claims 2–6 are unpatentable as obvious over Ellis, Spivey, and Herzog. Pet. 49–58. Petitioner provides a detailed analysis in support of its position that the combination of Ellis, Spivey, and Herzog teaches or suggests the limitations in dependent claims 2–6. *Id.*

We have reviewed Petitioner's assertions and the evidence in support thereof. Patent Owner relies on the same arguments discussed above in Section III.E.1 with respect to claim 1. Prelim. Resp. 46. Based on the record at this preliminary stage, we conclude that Petitioner has demonstrated a reasonable likelihood that it would prevail in showing that claims 2–6 are unpatentable under 35 U.S.C. § 103 as obvious over Ellis, Spivey, and Herzog.

G. Asserted Obviousness over Herzog, Spivey, and Ellis (Ground 2)

Petitioner asserts that claims 1–9 are unpatentable as obvious over Herzog, Spivey, and Ellis. Pet. 58–85. Patent Owner disputes Petitioner's showing. Prelim. Resp. 47–61.

1. Independent Claim 1 (Ground 2)

a) Motivation to Combine

Petitioner makes four arguments in support of its position that a person of ordinary skill in the art would have combined Herzog and Spivey, which are very similar to Petitioner's arguments made in support of its proposed combination of Ellis and Spivey. *Compare* Pet. 58–63, *with id.* at 17–22. For example, Petitioner argues that its proposed combination would have improved latency issues in Herzog's system. *Id.* at 58–61. Petitioner also argues that Herzog and Spivey relate to the same subject matter, the references solve the same or similar problems, and Spivey provides a complementary solution to Herzog. *Id.* at 60–61. Petitioner argues that a person of ordinary skill in the art would have had a reasonable expectation of success for the same reasons. *Id.* at 61.

Petitioner argues a person of ordinary skill in the art would have made its proposed combination of Herzog and Ellis "because a POSA would have understood that users would enjoy having more content options, *e.g.*, multiple live event streams, chat information, and advertising content." *Id.* at 62 (citing Ex. 1016 ¶¶ 39–41, Figs. 1, 2B; Ex. 1001 ¶ 157). Petitioner characterizes its proposed combination as "apply[ing] a known technique to a known device that was ready for improvement to yield a predictable result." *Id.* at 63 (Ex. 1001 ¶ 158). Petitioner also argues a person of ordinary skill in the art would have had a reasonable expectation of success "because Ellis specifically contemplates being implemented in a content delivery system such as Herzog, stating that it can be used with 'any suitable source of media content,' which includes IPTV content 'delivered on a particular network address (e.g., multicast address) on which an IP socket is

currently joined.'" *Id.* (quoting Ex. 1016 ¶¶ 40, 74; citing Ex. 1016 ¶ 39; Ex. 1001 ¶¶ 158–63).

Patent Owner makes three arguments in support of its position that Petitioner has not shown that a person of ordinary skill in the art would have made Petitioner's proposed combination. Prelim. Resp. 47–60. First, Patent Owner argues that Petitioner's proposed combination is inoperable and departs from the express teachings of Herzog. *Id.* at 47–51. Second, Patent Owner argues Petitioner's reasons do not "withstand scrutiny" in part because of differences in the reference teachings and because Petitioner does not show a person of ordinary skill in the art would have had a reasonable expectation of success. *Id.* at 52–56. Third, Patent Owner argues Petitioner relies on impermissible hindsight bias to "reconstruct the invention." *Id.* at 56–60.

We start with Petitioner's argument that its proposed combination would have been made to improve latency issues in Herzog's system. Pet. 58–62. Petitioner's argument is supported by the same disclosures in Spivey that were discussed with respect to Ground 1A. *See* § III.E.1.a. Patent Owner argues that Petitioner's proposed combination is inoperable and departs from the express teachings of Herzog because Herzog "needs the projected latency period to perform synchronization between the video/audio stream and the meta-data stream." Prelim. Resp. 48 (citing Ex. 1015 ¶¶ 74, 82; Ex. 2001 ¶¶ 281–283). Herzog describes that "live MPEG encoders may reach a latency that is greater than 32 seconds," "total latency in the video/audio data stream may be greater than 63 seconds," and "[t]he metadata, on the other hand, includes a latency that is less than a total of 2 seconds." Ex. 1015 ¶ 82.

Regarding Patent Owner's argument that Petitioner's proposed combination is inoperable (*see, e.g.*, Prelim. Resp. 48), based on the record before us at this early juncture, we find that Petitioner has shown sufficiently that its proposed combination is operable. Petitioner's proposed combination incorporates Spivey's technology that improves latency. *See, e.g.*, Ex. 1017 ¶¶ 27–28. Patent Owner's argument and Dr. Rubin's supporting testimony are based on improved latency causing inoperability, but Herzog teaches compensating for different types of data having different latencies. Ex. 1015 ¶ 82. Even to the extent that the resulting combination would have required processing a faster meta-data stream, it is well-settled that a preferred combination or device is not required. *See, e.g.*, *Novartis Pharm. Corp. v. West-Ward Pharm. Int'l Ltd.*, 923 F.3d 1051, 1059 (Fed. Cir. 2019) ("[O]ur case law does not require that a particular combination must be the preferred, or the most desirable, combination described in the prior art in order to provide motivation for the current invention."); *PAR Pharm., Inc. v. TWI Pharms., Inc.*, 773 F.3d 1186, 1197–98 (Fed. Cir. 2014) (holding that it is not necessary to show that a combination is "the best option, only that it be a suitable option"). Additionally, claim 1 requires only "first event information germane to a first live sporting event" and does not recite expressly that the first event information must be synchronized with the first live sporting event.

Relying on the testimony of Dr. Rubin, Patent Owner also argues that Petitioner's argument does not withstand scrutiny because "faster Herzog data . . . would not solve any video latency problem in Herzog because Herzog does not have a latency problem." Prelim. Resp. 52 (citing, e.g., Ex. 2001 ¶¶ 287–291). Petitioner's argument and Dr. Wicker's testimony

rely on Spivey's disclosures to support Petitioner's argument that Herzog has latency issues. Pet. 60; Ex. 1001 ¶ 144 (citing Ex. 1017 ¶¶ 27–28). Spivey describes that "[a]s technology allows users to receive such data away from desktop computers, the demand for live event data *in real time* on mobile devices has increased." Ex. 1017 ¶ 1 (emphasis added). Spivey describes that its technology reduces delay, "providing *a significant advantage over the conventional practices*." *Id.* ¶ 28 (emphasis added). At this early juncture, we find that Petitioner's argument of motivation to achieve reduced latency is supported sufficiently for purposes of institution based on Spivey's disclosure of user "demand" for "live event data in real time" and that Spivey's technology would have been understood to provide "*a significant advantage over the conventional practices*." *Id.* ¶¶ 1, 28 (emphasis added).

At this early stage, upon consideration of Petitioner's argument and Dr. Wicker's testimony, as well as Patent Owner's argument and Dr. Rubin's testimony, we find Petitioner has the better argument based on the preliminary record. We do not agree with Patent Owner's argument and Dr. Rubin's testimony that an alleged need to synchronize meta-data would undermine Petitioner's proposed combination. However, Herzog teaches synchronizing a faster meta-data stream. Ex. 1015 ¶ 82. Also, claim 1 does not recite expressly that the first event information must be synchronized with the first live sporting event.

We next turn to Petitioner's argument that a person of ordinary skill in the art would have made its proposed combination of Herzog and Ellis "because a POSA would have understood that users would enjoy having more content options, *e.g.*, multiple live event streams, chat information, and

advertising content." Pet. 62 (citing Ex. 1016 ¶¶ 39–41, Figs. 1, 2B; Ex. 1001 ¶ 157). Patent Owner argues that Petitioner's proposed combination is inoperable because Petitioner does not explain "how Ellis's multi-tuner system could be modified in view of Herzog to account for the exponential technical complexity involved in timestamp matching across multiple live events" and Petitioner does not show how its proposed combination would have been "workable." Prelim. Resp. 51 (citing Ex. 2001 ¶¶ 300–301); *see also id.* at 55 (citing Ex. 2001 ¶¶ 298–301) (arguing Petitioner's motivation to combine does not withstand scrutiny for the same reason). Based on the record at this early juncture, we find that Petitioner's proposal to incorporate Ellis's teaching of providing more content options, such as options from multiple broadcasters (Pet. 62; Ex. 1001 ¶ 157), does not require that technological features of Ellis's tuning technology be incorporated into Herzog. *In re Keller*, 642 F.2d 413, 425 (CCPA 1981) ("The test for obviousness is not whether the features of a secondary reference may be bodily incorporated into the structure of the primary reference," but, "[r]ather, the test is what the combined teachings of the references would have suggested to those of ordinary skill in the art."). Furthermore, Herzog teaches receiving four streams from four different imaging sources 48a–48d (Ex. 1015 ¶ 46), so Petitioner's proposed modification is merely that those four different streams may be from different broadcasters.

Patent Owner's arguments and Dr. Rubin's testimony that Petitioner's reasons do not "withstand scrutiny" in part because of differences in the reference teachings (*id.* at 52–56) rely on characterizations of the references that appear to be contradicted by the reference teachings at this early

juncture. Petitioner's arguments (Pet. 60–61) are supported by the disclosures in Ellis and Spivey discussed with respect to Ground 1A. *See* § III.E.1.a. Also, like Ellis and Spivey, Herzog provides content delivery for real-time events quickly to multiple users over the Internet. *See, e.g.*, Ex. 1015 ¶ 49 (describing publishing "video imagery, related audio and meta-data that are received from the content provider 42 onto the content delivery network 47 for presentation to users/consumers of the content via mobile devices such as device 45"), ¶ 51 (describing that an "Internet server provider (ISP)" may transfer data to local content delivery network 47), Figs. 1, 4, 7. Patent Owner's arguments and Dr. Rubin's testimony do not take into account the teachings of the references as a whole, from the perspective of an ordinarily skilled artisan. *See Sundance*, 550 F.3d at 1361 n.3; *Hedges*, 783 F.2d at 1041.

Patent Owner's arguments that Petitioner relies on impermissible hindsight bias to "reconstruct the invention" (Prelim. Resp. 56–60) and Dr. Rubin's related testimony rely on an incorrect characterization of the Petition and the evidence in the preliminary record. As discussed above, Petitioner's arguments that a person of ordinary skill in the art would have made its proposed combination are sufficient for purposes of institution.

We find based on the preliminary record before us that Petitioner provides sufficient rationale to combine the teachings of Herzog, Spivey, and Ellis for purposes of institution. We also find that Petitioner has shown sufficiently for purposes of institution that a person of ordinary skill in the art would have had a reasonable expectation of success. Additionally, we do not accord substantial weight to Patent Owner's arguments relating to

objective indicia of non-obviousness for the same reasons given with respect to Ground 1A. *See* § III.E.1.b.

b) Element-By-Element Analysis (Ground 2)

For Ground 2, Petitioner's element-by-element analysis of claim 1 relies on many of the same disclosures in Spivey and Ellis that Petitioner relies on for obviousness over Ellis and Spivey (Ground 1A). For example, with respect to "a first plurality of copies of a first broadcaster's live stream of digital content including first live sporting event video-based commentary from a first broadcaster client device" and "a second plurality of copies of a second broadcaster's live stream of digital content including second live sporting event video-based commentary from a second broadcaster client device," Petitioner argues that Ellis teaches these limitations by "expanding on Herzog's system by providing multiple live streams of digital content that is of two different live sporting events, which would include multiple broadcasting devices." Pet. 64 (citing Ex. 1015 ¶¶ 45, 83, Fig. 4; Ex. 1016 ¶¶ 62–63, Fig. 2B). With respect to "socket server," Petitioner relies on Spivey's message queue server device. Pet. 70 (citing, e.g., Ex. 1017 ¶¶ 35, 53, Figs. 3, 4). Also, with respect to "first event sockets corresponding to the first event information germane to the first live sporting event," Petitioner relies on "Spivey's topic queues." Pet. 72 (citing "§VIII.A.2.h.i").

Because Petitioner's Ground 2 arguments overlap its Ground 1A arguments, we do not provide an element-by-element discussion of Petitioner's Ground 2 at this early stage. We have reviewed Petitioner's element-by-element analysis and the evidence in support thereof. Except as discussed below, we find that Petitioner's contentions are supported by the cited portions of Herzog, Spivey, and Ellis.

We provide additional guidance to the parties with respect to limitation 1.5. Specifically, for limitation 1.5, Petitioner relies on "Herzog's ERP [Enhanced Result Protocol] Server" and Ellis's "SCS [Supplemental Content Source]." Pet. 67–68 (citing, e.g., Ex. 1015 ¶¶ 45, 47, 50, Fig. 4; Ex. 1016 ¶¶ 41–42, 142). Yet Petitioner's proposed combination does not incorporate Ellis's SCS. Pet. 62–63. Thus, at this preliminary stage, we are not persuaded by Petitioner's contentions regarding Ellis's supplemental content source 120 for teaching limitation 1.5 because, based on the current record, Petitioner has not shown sufficiently how Ellis's supplemental content source 120 would be part of Petitioner's proposed combination. Notwithstanding, we are persuaded preliminarily that "Herzog's ERP Server" teaches limitation 1.5. Pet. 67–68.

With respect to limitation 1.8, Patent Owner argues "[a]s Petitioner does in Ground 1A, it again relies on Spivey as allegedly disclosing the claimed socket server and teaching transmission of score information via a channel between an 'event socket' and a viewer client device." Prelim. Resp. 60. Patent Owner argues "[f]or the reasons stated above," Spivey "does not teach or render obvious the claimed 'event socket.'" *Id.* For the same reasons given with respect to Ground 1A (*see* § III.E.1), we find that Patent Owner's arguments do not undermine Petitioner's showing at this early stage.

c) Conclusion—Claim 1 (Ground 2)

After consideration of the arguments and the evidence of record at this early stage, we determine that Petitioner has shown sufficiently, for purposes of institution, that the combination of Herzog, Spivey, and Ellis teaches or suggests all recitations in claim 1. Also, we find that Petitioner provides

sufficient rationale to combine the teachings of Herzog, Spivey, and Ellis for purposes of institution. *See* §§ III.G.1.a.

Based on the record at this preliminary stage, we conclude that Petitioner has demonstrated a reasonable likelihood that it would prevail in showing that claim 1 is unpatentable under 35 U.S.C. § 103 as obvious over Herzog, Spivey, and Ellis.

2. Dependent Claims 2–9 (Ground 2)

Petitioner asserts that claims 2–9 are unpatentable as obvious over Herzog, Spivey, and Ellis. Pet. 74–85. Petitioner provides a detailed analysis in support of its position that the combination of Herzog, Spivey, and Ellis teaches or suggests the limitations in dependent claims 2–9. *Id.*

We have reviewed Petitioner's assertions and the evidence in support thereof. Patent Owner relies on the same arguments discussed above in Section III.G.1 with respect to claim 1. Prelim. Resp. 61. Based on the record at this preliminary stage, we conclude that Petitioner has demonstrated a reasonable likelihood that it would prevail in showing that claims 2–9 are unpatentable under 35 U.S.C. § 103 as obvious over Herzog, Spivey, and Ellis.

IV. CONCLUSION

For the foregoing reasons, we determine that Petitioner has demonstrated that there is a reasonable likelihood that it would prevail in proving the unpatentability of at least one of the challenged claims of the '697 patent. We thus institute an *inter partes* review of all of the challenged claims of the '697 patent on all grounds asserted in the Petition. *See* 37 C.F.R. § 42.108(a).

Any findings or conclusions in this Decision are made only for the purposes of institution and are not dispositive of any issue. We have not made a final determination with respect to the patentability of any challenged claim. Our final determination will be based on the record as fully developed during trial, including any evidence or argument timely presented by the parties under our Rules.

V. ORDER

In consideration of the foregoing, it is hereby:

ORDERED that *inter partes* review of claims 1–9 of the ’697 patent is hereby instituted on all grounds stated in the Petition; and

FURTHER ORDERED that pursuant to 35 U.S.C. § 314(c) and 37 C.F.R. § 42.4, notice is hereby given of the institution of a trial; the trial will commence on the entry date of this decision.

For PETITIONER:

W. Baker
Michael Dinnella
KIRKLAND & ELLIS LLP
todd.baker@kirkland.com
mtd5145@gmail.com

For PATENT OWNER:

Brian Eutermoser
Mikaela Stone
KING & SPALDING LLP
beutermoser@kslaw.com
mikaela.stone@kslaw.com

Trials@uspto.gov
571-272-7822

Paper 9
Date: March 6, 2025

UNITED STATES PATENT AND TRADEMARK OFFICE

BEFORE THE PATENT TRIAL AND APPEAL BOARD

GENIUS SPORTS LTD.,
Petitioner,

v.

SPORTSCASTR INC. d/b/a PANDA INTERACTIVE
Patent Owner.

IPR2024-01309
Patent 10,425,697 B2

Before BARBARA A. PARVIS, JOHN A. HUDALLA, and SHARON FENICK, *Administrative Patent Judges*.

PARVIS, *Administrative Patent Judge*.

DECISION
Granting Institution of *Inter Partes* Review
35 U.S.C. § 314

I. INTRODUCTION

Genius Sports Ltd. ("Petitioner") filed a Petition (Paper 1 ("Pet.")) requesting *inter partes* review of claims 19–25 and 27–30 ("challenged claims") of U.S. Patent No. 10,425,697 B2 (Ex. 1006, "the '697 patent"). SportsCastr Inc. (d/b/a PANDA Interactive) ("Patent Owner") filed a Preliminary Response. Paper 6 ("Prelim. Resp.").

We have authority to determine whether to institute review under 35 U.S.C. § 314 and 37 C.F.R. § 42.4. We may institute an *inter partes* review if "the information presented in the petition . . . and any response . . . shows that there is a reasonable likelihood that the petitioner would prevail with respect to at least 1 of the claims challenged in the petition." 35 U.S.C. § 314.

Upon consideration of the contentions and the evidence of record at this preliminary stage, we determine that Petitioner has demonstrated a reasonable likelihood of prevailing on at least one of the challenged claims of the '697 patent. Accordingly, we grant Petitioner's request and institute an *inter partes* review of all challenged claims of the '697 patent and with respect to all grounds set forth in the Petition.

II. BACKGROUND

A. Real Parties-in-Interest

Petitioner identifies itself as the real party-in-interest. Pet. 3. Patent Owner names itself as the real party-in-interest. Paper 5, 1.

B. Related Matters

Both parties identify, as a matter currently involving the '697 patent, *SportsCastr Inc. v. Genius Sports Ltd.*, No. 2:23-cv-00471 (E.D. Tex.). Pet. 3; Paper 5, 1. The parties also identify that Petitioner filed a second petition

challenging the ’697 patent as *Genius Sports Ltd. v. SportsCastr Inc. d/b/a PANDA Interactive*, IPR2024-01308 (PTAB) (the “1308 IPR”). Pet. 3; Paper 5, 1. Petitioner filed a document which ranks the petition in the instant case first. *See* Paper 3 (Petitioner’s Reasons for Parallel Petitions and Petition Ranking (“Ranking”)).

Patent Owner also identifies *SportsCastr Inc. v. Sportradar Group, AG et al*., 2:23-cv-00472 (E.D. Tex.) as a matter involving the ’697 patent. Paper 5, 1.

Petitioner further identifies four other petitions challenging patents related to the ’697 patent in IPR2024-01305, IPR2024-01307, IPR2024-01310, and IPR2024-01311. Pet. 3–4.

C. The ’697 Patent

The ’697 patent is titled “Systems, Apparatus, and Methods for Scalable Low-Latency Viewing of Broadcast Digital Content Streams of Live Events, and Synchronization of Event Information with Viewed Streams, via Multiple Internet Channels.” Ex. 1006, code (54). The ’697 patent relates to systems and methods that facilitate providing live stream video and/or audio broadcasts to viewers in real time. *Id.* at 2:49–57. Figure 1A of the ’697 patent is reproduced below.

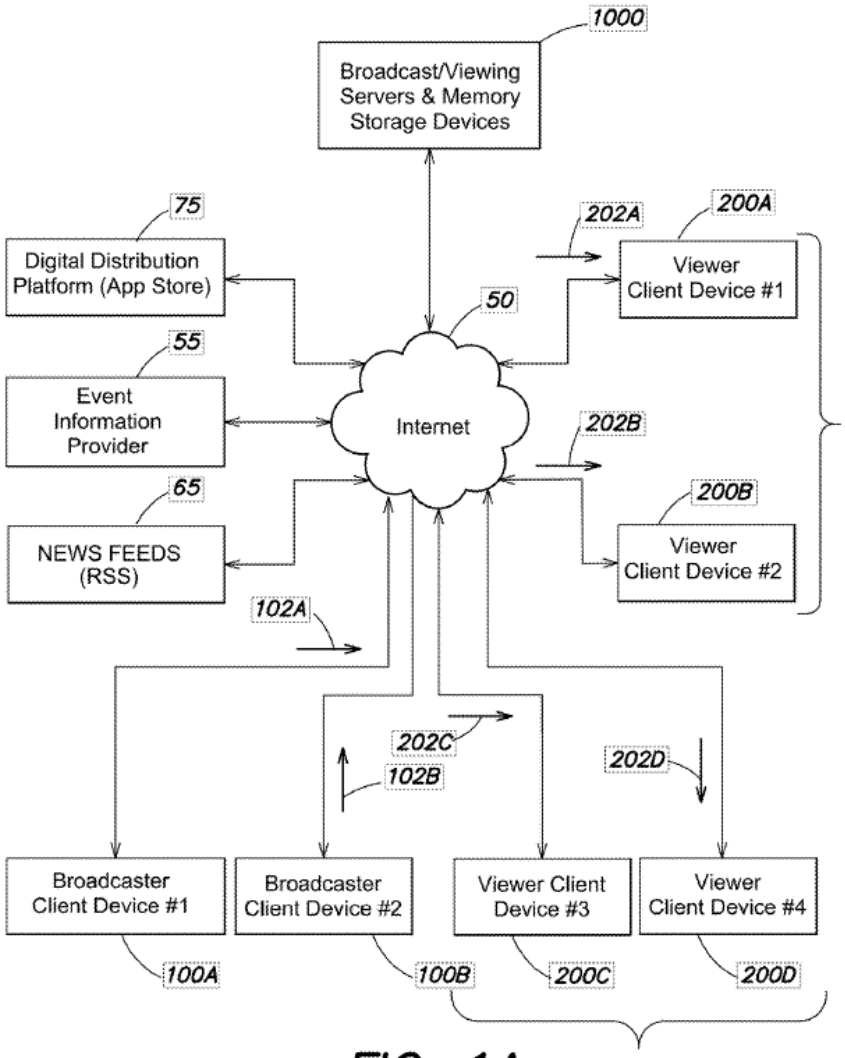

FIG. 1A

Figure 1A is a block diagram of a system facilitating live streaming digital content from multiple broadcasters to multiple viewers. *Id.* at 11:9–12.

The system shown in Figure 1A includes broadcaster client devices 100A and 100B, viewer client devices 200A–200D, broadcast/viewing servers and memory storage devices 1000, event information provider 55, one or more news feeds 65, and digital distribution platform 75, all coupled together via Internet 50. *Id.* at 14:41–49. In Figure 1A, first broadcaster client device 100A provides first live stream of digital content 102A, and copies 202A and 202B of digital content 102A are received by viewer client

devices 200A and 200B, respectively. *Id.* at 15:11–16. Similarly, second broadcaster client device 100B provides second live stream of digital content 102B, and copies 202C and 202D are received by viewer client devices 200C and 200D, respectively. *Id.* at 15:17–22. Broadcast/viewing servers and memory storage devices 1000 may retrieve news and/or event information germane to a live stream of digital content from news feeds 65 and event information provider 55 and convey the relevant news and/or event information to one or more client devices. *Id.* at 15:22–29.

Figure 2, reproduced below, is a block diagram of broadcast/viewing servers and memory storage devices 1000 in the system of Figure 1A. *Id.* at 11:16–18, 18:26–34.

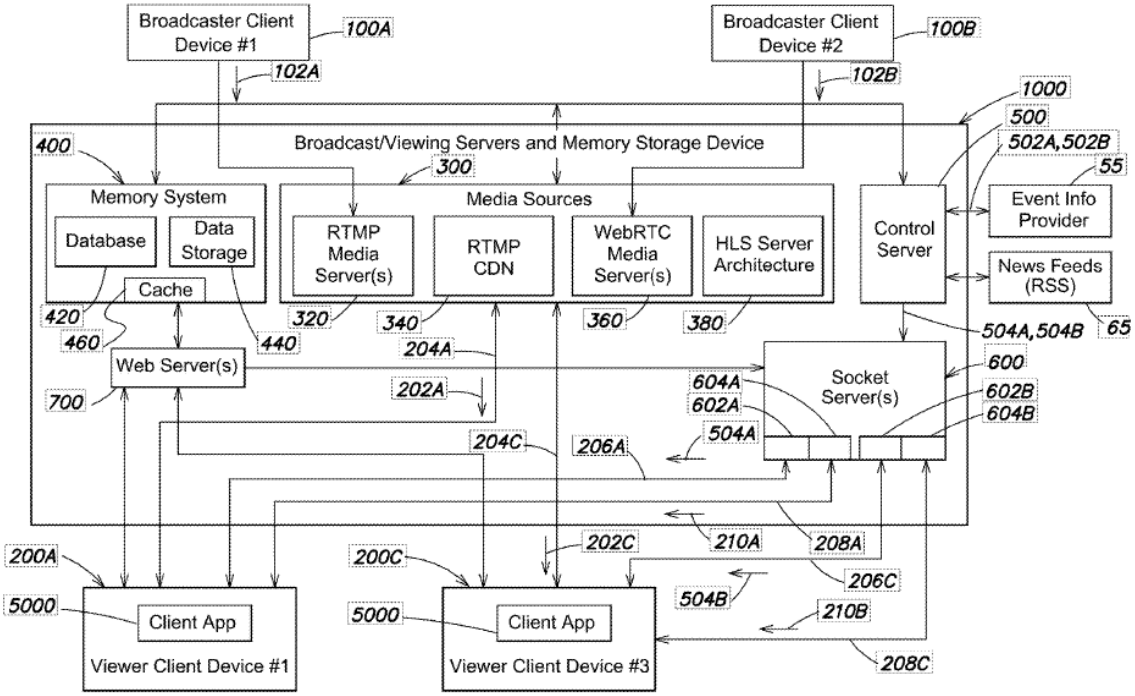

FIG. 2

Figure 2 is a block diagram of servers/memory storage devices 1000. *Id.* at 11:16–18, 18:26–34.

Figure 2 shows servers/memory storage devices 1000 including, in relevant part, a plurality of media sources 300, control server 500, one or more web servers 700, and socket server 600. *Id.* at 18:45–52, 19:7–20:5. Media sources 300 receive live streams of digital content (102A, 102B) from broadcaster client devices (100A, 100B) and provide copies (202A, 202C) to viewer client devices (200A, 200C). *Id.* at 19:7–13. Web server 700 supports an application programming interface to facilitate communication between servers/memory storage devices 1000 and client devices. *Id.* at 18:45–52. Control server 500 retrieves news and/or event information germane to the live streams of digital content (102A, 202C) from news feeds 65 and event information provider 55. *Id.* at 19:41–45. Socket servers 600 facilitate communication of synchronized event information retrieved by control server 500 to broadcaster and viewer client devices. *Id.* at 19:67–20:5. For example, control server 500 may retrieve first score information 504A for a first live sporting event and provide it to socket server 600, which establishes event socket 602A. *Id.* at 21:37–52. First viewer client device 200A connects to event socket 602A via a URL, and first score information 504A is transmitted to first viewer client device 200A. *Id.* at 21:59–22:6.

D. Illustrative Claims

Petitioner challenges claims 19–25 and 27–30 of the ’697 patent. Pet. 5. Claims 19, 23, and 27 are independent claims. Claims 20–22 depend, directly or indirectly, from claim 19, claims 24 and 25 depend from claim 23, and claims 28–30 depend from claim 27. Independent claim 19, reproduced below, is illustrative of the claimed subject matter.

19. [19.0[1]] A system for providing a first plurality of copies of a first broadcaster's live stream of digital content including first video-based commentary about a first live sporting event from a first broadcaster client device to a first plurality of viewer client devices, and for providing a second plurality of copies of a second broadcaster's live stream of digital content including second video-based commentary about a second live sporting event from a second broadcaster client device to a second plurality of viewer client devices, the system comprising:

[19.1] A) a plurality of media sources to:

[19.2] receive the first broadcaster's live stream of digital content and the second broadcaster's live stream of digital content;

[19.3] provide a first copy of the first plurality of copies to a first viewer client device of the first plurality of viewer client devices via a first Internet communication channel between the plurality of media sources and the first viewer client device of the first plurality of viewer client devices; and

[19.4] provide a first copy of the second plurality of copies to a first viewer client device of the second plurality of viewer client devices via a second Internet communication channel between the plurality of media sources and the first viewer client device of the second plurality of viewer client devices;

[19.5] B) a control server to periodically retrieve, via the Internet and from an event information provider, first event information germane to the first live sporting event and second event information germane to the second live sporting event; and

[19.6] C) at least one socket server communicatively coupled to the control server to:

[1] Herein we use Petitioner's designations for the elements of the challenged claims. Ex. 1007.

[19.7] receive from the control server at least some of the first event information and at least some of the second event information; wherein:

[19.8] the at least some of the first event information includes first score information for the first sporting event; and

[19.9] the at least some of the second event information includes second score information for the second sporting event; and

[19.10] transmit at least the first score information the at least some of the first event information to the first viewer client device of the first plurality of viewer client devices via a third Internet communication channel between at least one first event socket of the at least one socket server and the first viewer client device of the first plurality of viewer devices; and

[19.11] transmit at least the second score information of the at least some of the second event information to the first viewer client device of the second plurality of viewer client devices via a fourth Internet communication channel between at least one second event socket of the at least one socket server and the first viewer client device of the second plurality of viewer devices.

Ex. 1006, 63:62–64:51.

E. Evidence

Petitioner relies on the patent references summarized in the table below.

Name	Reference	Exhibit
Herzog	US 2015/0163379 A1, filed Dec. 11, 2013, published June 11, 2015	1015
Ellis	US 2014/0229992 A1, filed Apr. 22, 2014, published Aug. 14, 2014	1016

Name	Reference	Exhibit
Spivey	US 2016/0036910 A1, filed Aug. 4, 2014, published Feb. 4, 2016	1017

Petitioner also relies on the Declaration of Stephen B. Wicker, Ph.D. (Ex. 1001) to support its contentions that the challenged claims are unpatentable. Patent Owner relies on the Declaration of Aviel Rubin, Ph.D. (Ex. 2001) in support of its contentions that Petitioner has not shown that the challenged claims are unpatentable.

F. Asserted Grounds

Petitioner asserts that the challenged claims of the ’697 patent are unpatentable based on the following grounds summarized in the table below (Pet. 6):

Claim(s) Challenged	35 U.S.C. §[2]	References/Basis	Ground name
19–25, 27–30	103	Ellis, Spivey	1
19–25, 27–30	103	Herzog, Spivey, Ellis	2

III. ANALYSIS

A. Legal Standards

A patent claim is unpatentable as obvious if the differences between the claimed invention and the prior art are such that the claimed invention, as a whole, would have been obvious before the effective filing date to a person having ordinary skill in the art. *KSR Int’l Co. v. Teleflex Inc.*, 550

[2] The Leahy-Smith America Invents Act (“AIA”), Pub. L. No. 112-29, 125 Stat. 284 (2011), amended 35 U.S.C. § 103, effective March 16, 2013. Because the challenged claims of the ’697 patent have an apparent effective filing date after March 16, 2013, the AIA version of § 103 applies. Our determinations and findings herein would not change if the pre-AIA provisions applied.

U.S. 398, 406 (2007). The question of obviousness is resolved on the basis of underlying factual determinations including: (1) the scope and content of the prior art; (2) any differences between the claimed subject matter and the prior art; (3) the level of ordinary skill in the art; and (4) when in evidence, objective evidence of nonobviousness, i.e., secondary considerations. *Graham v. John Deere Co.*, 383 U.S. 1, 17–18 (1966).

B. Level of Ordinary Skill in the Art

Petitioner asserts that a person of ordinary skill in the art

> would have had at least a bachelor's degree, or equivalent, in electrical engineering, computer engineering, computer science, or a related field or an equivalent number of years of working experience, and one to two years of experience in networking environments, including at least some experience with live-streaming network architecture. Ex.1001 ¶¶72-76. Additional education or experience in related fields could compensate for deficits in the above qualifications. *Id.*

Pet. 15.

Patent Owner asserts:

> A person of ordinary skill in the art would have a bachelor's degree in electrical engineering, computer engineering, computer science, or equivalent degree and, in addition, approximately two years of work experience with Internet video streaming, Internet communication, and related protocols. (EX-2001, §IV.C, ¶103.).

Prelim. Resp. 10.

The parties have not addressed whether the differences in these definitions impact the unpatentability analysis before us. We preliminarily adopt Patent Owner's formulation of the level of skill in the art, which is more specific and appears consistent with the specification and prior art

presented, but on the present record we would reach the same determination under Petitioner's formulation of the level of skill.

C. Claim Construction

We interpret the challenged claims

> using the same claim construction standard that would be used to construe the claim in a civil action under 35 U.S.C. 282(b), including construing the claim in accordance with the ordinary and customary meaning of such claim as understood by one of ordinary skill in the art and the prosecution history pertaining to the patent.

37 C.F.R. § 42.100(b). Under that standard, we generally give claim terms their ordinary and customary meaning, as would be understood by a person of ordinary skill in the art at the time of the invention, in light of the language of the claims, the specification, and the prosecution history. *Phillips v. AWH Corp*., 415 F.3d 1303, 1312–14 (Fed. Cir. 2005) (en banc).

Petitioner states that "[t]he claim terms of the '697 should be given their plain and ordinary meaning as understood by a person of skill in the art ('POSA')." Pet. 6. Petitioner proposes constructions for the means-plus-function terms recited in claims 27 through 30 (*id.* at 7–8) and the term "event socket" (*id.* at 39) recited in each of independent claims 19 and 23. Petitioner does not propose an express construction for any other claim term. *See generally id.*

Patent Owner discusses construction of only the terms "means for transmitting the first score information. . ." (limitation 27.3) and "event socket." *See generally* Prelim. Resp. We address those terms below.

The table below summarizes Petitioner's contentions for each means-plus-function limitation recited in claims 27–30.

Limitation	Structure	Function
27.1	Media sources performing the algorithm disclosed in 9:16–41 and shown as media sources 300 in Figure 2 of the ’697 patent.	Providing the first copy to the first viewer client device via a first video communication channel;
27.2	Control Server performing the algorithm disclosed in 9:41–46 and shown as control server 500 in Figure 2 of the ’697 patent.	Retrieving, via the Internet, first event information germane to a first live sporting event; and
27.3	Socket Server performing the algorithm disclosed in 9:46–58 and shown as socket server 600 in Figure 2 of the ’697 patent.	Transmitting the first event information to at least the first viewer client device via a first event information communication channel that is different from the first video communication channel.
28.1	Socket Server performing the algorithm disclosed in 20:17–25 and shown as socket server 600 in Figure 2 of the ’697 patent.	Transmitting and receiving first chat information regarding the first live sporting event via at least one first chat/system event Internet communication channel that is different from the first video communication channel and the first event information communication channel.
29.0	Control Server performing the algorithm disclosed in 17:28–38 and shown as control server 500 in Figure 2 of the ’697 patent.	Updating the first event information and queueing an asynchronous message including the updated first event information for transmission on the first event information communication channel.

30.0	HLS mother server, HLS child servers, and an HLS CDN shown as HLS server architecture 380 in Figure 8 performing the algorithm disclosed in 33:21–33 and Figures 9A–9D.[3]	Providing the first copy to the first viewer client device via a first video communication channel between the HLS CDN and the first viewer client device, wherein the first copy is based on the first HLS file suite received by the HLS mother server.

"The Board is required to construe 'only those terms . . . that are in controversy, and only to the extent necessary to resolve the controversy.'" *Realtime Data, LLC v. Iancu*, 912 F.3d 1368, 1375 (Fed. Cir. 2019) (quoting *Vivid Techs., Inc. v. Am. Sci. & Eng'g, Inc.*, 200 F.3d 795, 803 (Fed. Cir. 1999)). At this early stage, therefore, for the terms which are not contested (all except for the limitation 27.3 means plus function term, addressed below) we use Petitioner's proposed constructions for the means-plus-function terms with one exception. Specifically, based on the structure and dependency of claim 30, we determine preliminarily that the preamble of claim 30 is non-limiting and does not require construction as a means-plus-function limitation. We use the ordinary and customary meaning of the other claim terms and we decline to provide an express construction of any other claim term.

1. "first/second event socket"

Petitioner argues that a "first/second event socket" is "a socket where information about each sporting event is provided to VCDs [viewer client devices]." Pet. 39. Petitioner argues that "a POSA would have understood a

[3] HLS is HTTP (Hypertext Transfer Protocol) Live Streaming and CDN is Content Delivery Network.

'socket' to be a uniquely addressable communication endpoint on a server where first/second event information is provided to VCDs." *Id.* (citing Ex. 1001 ¶ 594–595).

Patent Owner argues "under" Petitioner's proposed construction of "socket," the Petitioner is deficient. Prelim. Resp. 39–40. At this early stage, Patent Owner does not dispute Petitioner's construction for either "event socket" or "socket," and, indeed, applies Petitioner's proposed construction of "socket." *Id.*

For purposes of this Decision, we apply Petitioner's construction of "socket" and "event socket."

2. "means for transmitting the first score information to at least the first viewer client device via a first event information communication channel that is different from the first video communication channel"

Petitioner argues that the structure is the "Socket Server performing the algorithm disclosed in 20:17–25 and Figure 2 of the '697 [patent]." Pet. 8. Petitioner argues the function is "[t]ransmitting the first event information to at least the first viewer client device via a first event information communication channel that is different from the first video communication channel." *Id.* As noted above, we treat Petitioner's contention regarding Figure 2 of the '697 patent as identification of socket server 600 shown in Figure 2.

Patent Owner responds as follows:

> Patent Owner agrees with Petitioner's construction; however, more specifically, a POSITA would understand the "means for transmitting" to be a socket server transmitting through an event socket that implements the algorithms described in Figures 2, 3, 21A–21E and accompanying disclosures, including 5:29–44 9:16–10:43, 19:64–20:61, 21:37–22:67, 23:20–45, 26:50–27:27,

> 29:25–43, 46:61–47:11, 51:27–49, and 53:21–37 of the ’697 patent. (EX-2001, §IV.B.1.)

Prelim. Resp. 9. Patent Owner argues “a POSITA would understand ‘means for transmitting’ to be a socket server transmitting event information through an event socket.” *Id.*

Because Patent Owner states that it “agrees with Petitioner’s construction” (*id.* at 9), we use Petitioner’s identification of the structure and function (Pet. 8) at this early stage.

D. Overview of Asserted Prior Art

1. Ellis (Exhibit 1016)

Ellis is titled “Systems and Methods for Providing Enhanced Sports Watching Media Guidance,” and discloses systems and methods for accessing and displaying sports-related media content. Ex. 1016, codes (54), (57). Figure 1 of Ellis, reproduced below, illustrates an interactive media system. *Id.* ¶¶ 15, 39.

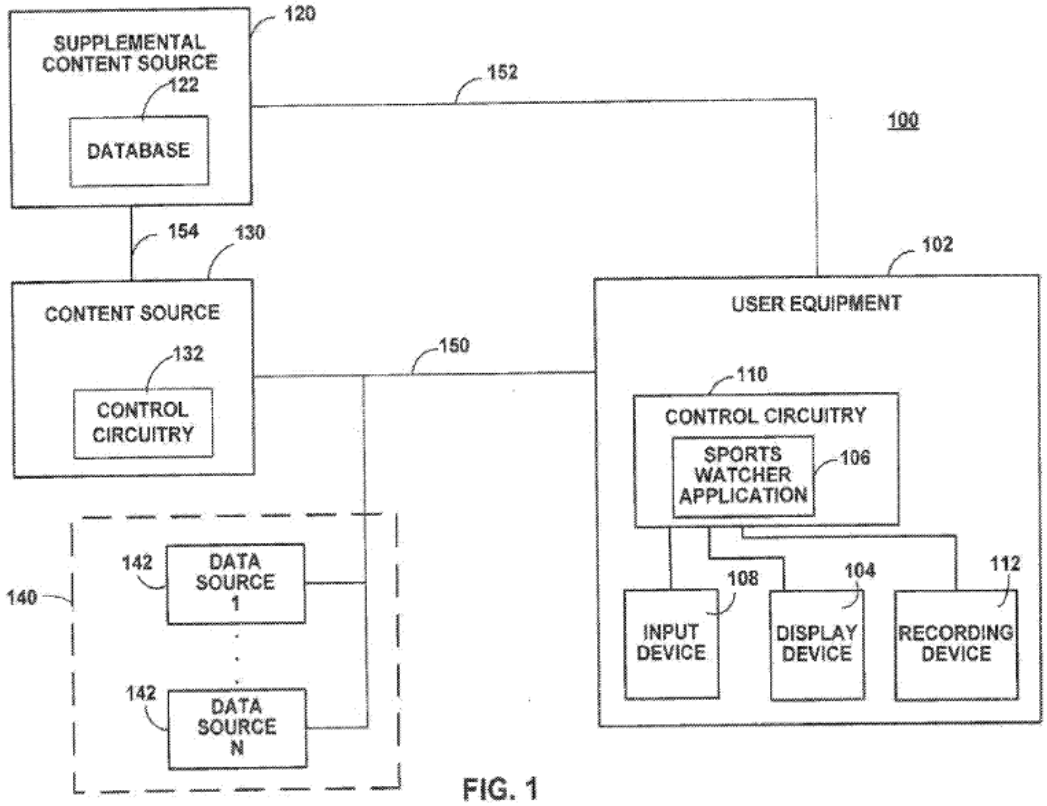

Figure 1 is a block diagram illustrating interactive media system 100. *Id.* ¶¶ 15, 39.

Figure 1 shows interactive media system 100 including user equipment 102, content source 130, supplemental content source 120, and data sources 140. *Id.* ¶ 39. User equipment device 102 receives media content, such as video broadcast programming, from content source 130 via communication path 150. *Id.* ¶¶ 39–40, Fig. 1. User equipment device 102 also receives content, such as real-time sports scores and game summary information, from supplemental content source 120 via communication path 152. *Id.* ¶¶ 39, 41, Fig. 1. Data sources 140 provide data for applications running on user equipment 102. *Id.* ¶ 46.

2. Spivey (Exhibit 1017)

Spivey is titled "Techniques to Broadcast Live Event Data in Real-Time," and discloses a system for broadcasting live event data in real-time. Ex. 1017, codes (54), (57). According to Spivey, its techniques "increase the speed at which live event data (e.g. sports scores and breaking news), are broadcast to mobile devices by using topic queues and open duplex communication connections, among other innovative techniques." *Id.* ¶ 27. Figure 1 of Spivey is reproduced below. *Id.* ¶¶ 3, 34.

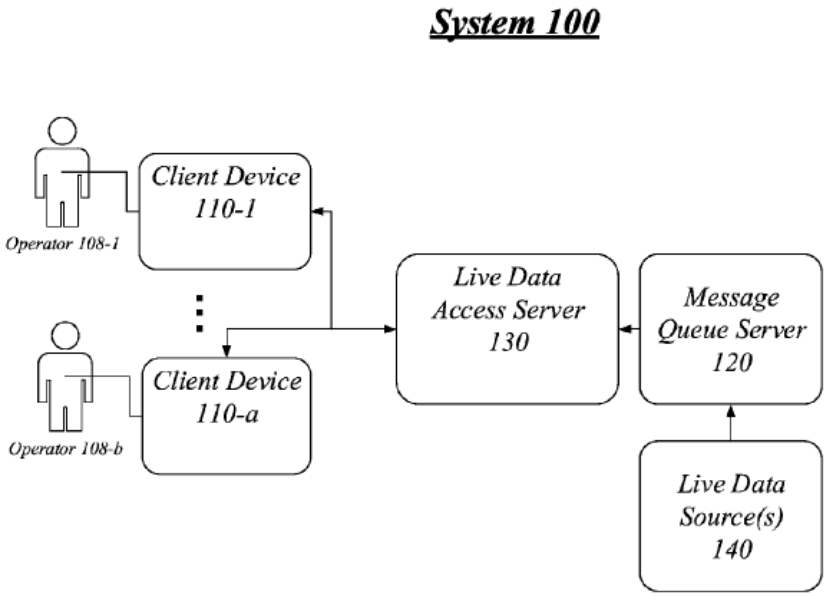

FIG. 1

Figure 1 illustrates system 100 for broadcasting live event data. *Id.* ¶¶ 3, 34.

Figure 1 shows system 100 including client devices 110-1 through 110-a, message queue server 120, and live data access server 130 coupled via one or more networks. *Id.* ¶ 34. Message queue server 120 receives live data from live data source(s) 140 and processes the live data so that it can be provided to client devices 110-1 through 110-a. *Id.* ¶¶ 35–37. Live data

access server 130 interfaces between message queue server 120 and client devices 110-1 and 110-a. *Id.* ¶ 38.

Figure 4 of Spivey, reproduced below, illustrates operating environment 400. *Id.* ¶¶ 6, 53.

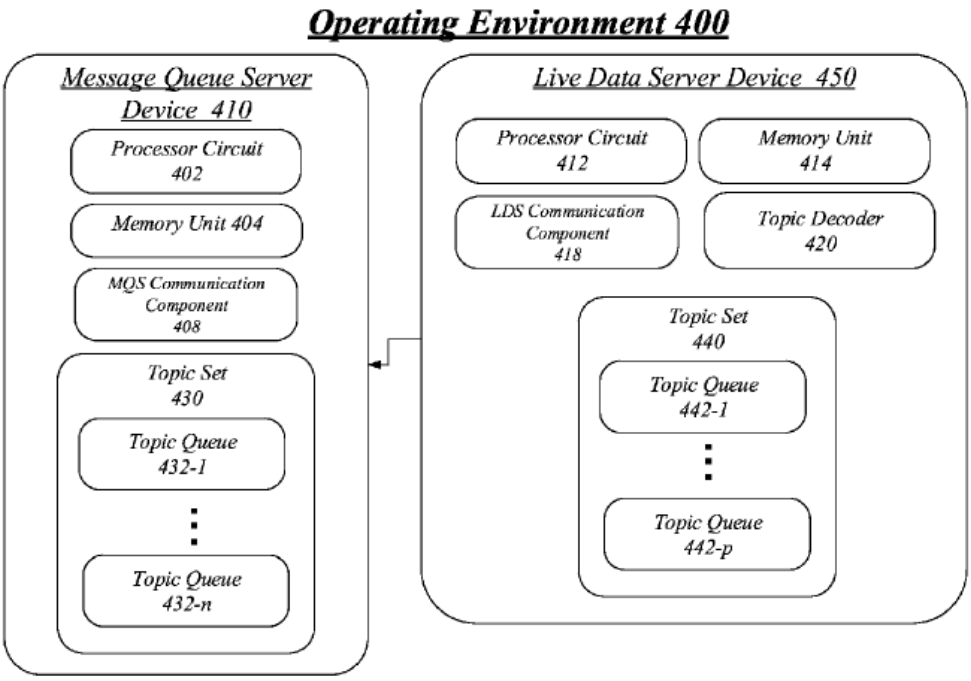

FIG. 4

Figure 4 illustrates operating environment 400. *Id.* ¶¶ 6, 53.

Figure 4 shows operating environment 400, in which message queue server 120 is implemented as message queue server device 410 and live data server device 450. *Id.* ¶ 53. Message queue server device 410 includes communication component 408, topic set 430, and topic queues 432. *Id.* ¶ 54. Live data server device 450 includes live data server communication component 418 that allows live data server device 450 to receive live data and transmit it to message queue server device 410. *Id.* ¶ 55. Live data server device 450 also includes topic decoder 420, topic set 440, and topic queues 442. *Id.* ¶ 56.

3. *Herzog (Exhibit 1015)*

Herzog is titled "Time Synchronization of Video and Data Inside a Mobile Device," and discloses a mobile device including a processor configured to receive and format live video data, audio data, and meta-data for display on the mobile device, and synchronize selected meta-data with the video and audio for simultaneous display. Ex. 1015, codes (54), (57). Figure 4 of Herzog, reproduced below shows a system 40 that provides communications for mobile devices. *Id.* ¶¶ 9, 43.

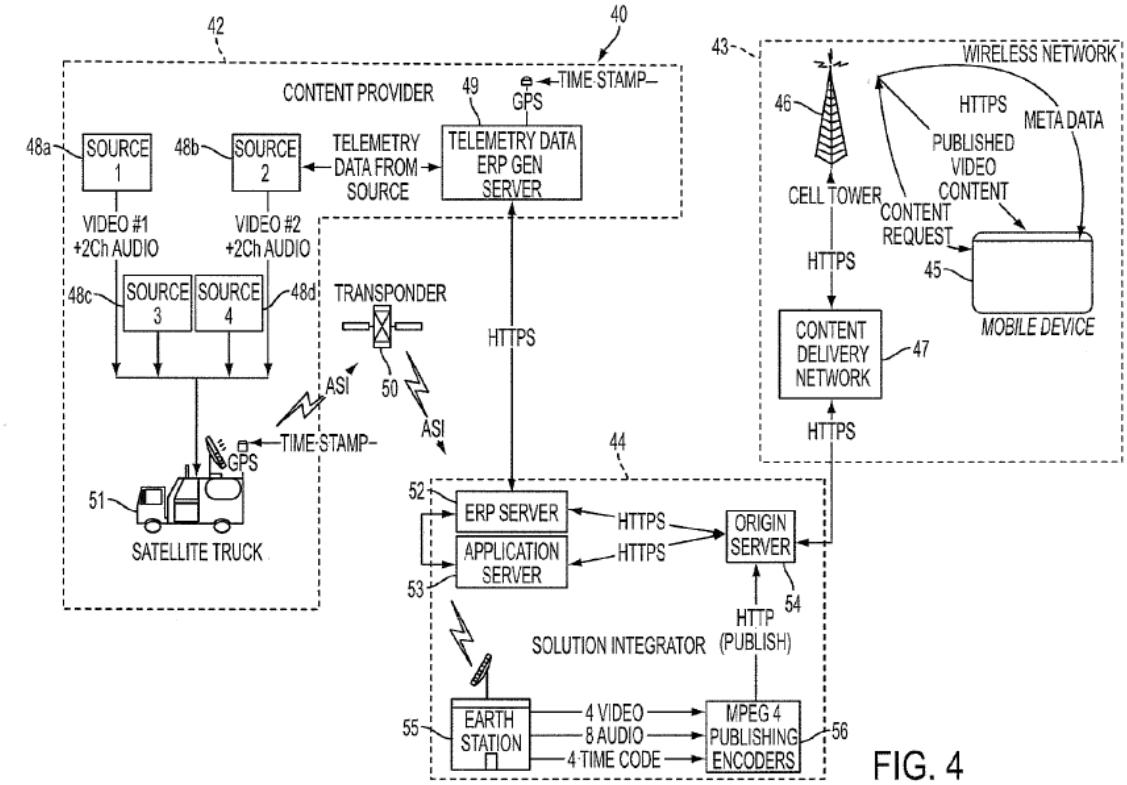

Figure 4 shows system 40 that provides communications to exemplary mobile device 45. *Id.* ¶¶ 9, 43.

As shown in Figure 4, system 40 provides communications to mobile device 45 in wireless network 43 via content delivery network 47. *Id.* ¶ 43. System 40 includes content provider 42, which provides video and audio data of an event occurring in real time, along with meta-data. *Id.* ¶ 45.

Content provider 42 provides video/audio streams from imaging sources 48*a*–48*d*. *Id.* ¶ 46. Content provider 42 also includes an Enhanced Result Protocol (ERP) generator server 49 configured to receive meta-data from imaging sources 48*a*–48*d*. *Id.* ¶ 47. ERP generator server 49 extracts meta-data parameters that may be of interest to a user, formats the extracted meta-data into an HTTPS protocol, and transmits the formatted meta-data to solution integrator 44. *Id.* Solution integrator 44 transmits the video/audio stream and meta-data to content delivery network 47 for delivery to mobile device 45. *Id.* ¶¶ 48–51.

E. Asserted Obviousness over Ellis and Spivey (Ground 1)

Petitioner asserts that claims 19–25 and 27–30 are unpatentable as obvious over Ellis and Spivey. Pet. 19–60. Patent Owner disputes Petitioner's showing for independent claim 19. Prelim. Resp. 22–46.

1. Independent Claim 19 (Ground 1)

a) Motivation to Combine

Petitioner's proposed combination of the teachings of Ellis and Spivey involves substituting Spivey's server devices that use websocket connection technology for Ellis's HTTP server. Pet. 19–22 (citing, e.g., Ex. 1001 ¶¶ 106–115; Ex. 1016 ¶¶ 39–41, Fig. 1; Ex. 1017, Fig. 4). In particular, Petitioner argues that a person of ordinary skill in the art would have replaced Ellis's supplemental content source 120 with Spivey's live data server device 450 and message queue server device 410, such that data would have been delivered using a websocket connection instead of HTTPS. *Id.* at 20–22 (citing, e.g., Ex. 1001 ¶¶ 106–115; Ex. 1016 ¶¶ 39–41, 156, Fig. 1; Ex. 1017 ¶¶ 27–28, code (57), Fig. 4). Ellis describes that its supplemental content source 120 provides real-time data feeds with sports-

related information, such as sports scores. *See, e.g.*, Ex. 1016 ¶ 41. Similarly, Spivey describes that its system including live data server device 450 and message queue server device 410 provides live event data, such as sports scores. *See, e.g.*, Ex. 1017 ¶ 27, Fig. 4.

Petitioner makes four arguments in support of its position that a person of ordinary skill in the art would have made its proposed combination. Pet. 19–24. First, Petitioner argues that its proposed combination would have been made to improve latency issues in Ellis's system. *Id.* at 19–21, 23. Second, Petitioner argues that Ellis and Spivey relate to the same subject matter and the references solve the same or similar problems. *Id.* at 22. Third, Petitioner argues that a person would have motivated because Spivey provides a complementary solution to Ellis and describes the details of a backend architecture for transmitting event data to multiple users. *Id.* at 22–23. Fourth, Petitioner argues that its proposed combination would have been obvious because it "would have required only the simple substitution of known elements to obtain predictable results." *Id.*at 23–24. Petitioner takes the position that these same arguments support that a person of ordinary skill in the art would have had a reasonable expectation of success. *Id*. at 22–24.

Patent Owner makes three arguments in support of its position that Petitioner has not shown that a person of ordinary skill in the art would have combined the teachings of Ellis and Spivey. Prelim. Resp. 22–35. First, Patent Owner argues that Petitioner's proposed combination is inoperable and departs from the express teachings of Ellis because Petitioner's proposed combination removes Ellis's supplemental content source 120 having database 122 and replaces it with "Spivey's database-less system."

Id. at 22–26. Second, Patent Owner argues Petitioner's reasons do not "withstand scrutiny" in part because of differences in the references' teachings and because Petitioner does not show a person of ordinary skill in the art would have had a reasonable expectation of success. *Id.* at 26–31. Third, Patent Owner argues Petitioner relies on impermissible hindsight bias to "reconstruct the invention" from "cherry-picked" prior art teachings. *Id.* at 31–35.

For the reasons given below, we find that Petitioner's arguments are supported by the evidence in the preliminary record before us at this early juncture and that Patent Owner's arguments do not undermine Petitioner's showing. For instance, Petitioner's first argument, that its proposed combination would have been made to improve latency issues in Ellis's system (Pet. 19–21, 23), is supported by Spivey's disclosure that its techniques "may reduce . . . delay [on the order of seconds (e.g., 30 to 45 seconds) or minutes] to an order of milliseconds (ms) (e.g., 100 ms) or less, providing a significant advantage over the conventional practices." Ex. 1017 ¶ 28. Spivey also discloses pushing data "to the subscribed connected client devices substantially simultaneously with the message queue server receiving the topic entry from a live data source, e.g., with a time delay of 100 milliseconds or less," which Spivey discloses is "at least two orders of magnitude shorter than conventional time periods of legacy devices." *Id.* ¶ 96*; see also id.* at code (57) (disclosing pushing "the topic entry to a subscribed client device substantially simultaneously with the message queue server receiving the topic entry from a live data source").[4]

[4] Petitioner's position is also supported by the testimony of Dr. Wicker that "[w]ebsockets protocol was an emerging technology that offered particular

Petitioner's second, third, and fourth arguments and arguments relating to reasonable expectation of success (Pet. 22–24) also are supported by the evidence in the preliminary record showing the similarity between, and complementary nature of the Ellis and Spivey disclosures of providing content delivery for real-time events quickly to multiple users. *See, e.g.*, Ex. 1016, code (57) (describing "[s]ystems and methods for enhanced sports-related media content access and display"), ¶ 39 (describing that in system 100 "[u]ser equipment device 102 receives content . . . from content source 130 and/or supplemental content source 120 over communications paths 150 and 152, respectively" and "[a]ny suitable number of users may have one or more user equipment devices, such as user equipment 102"), ¶ 40 (describing that "[c]ontent source 130 may be any suitable source of media content" such as the "Internet or network media/web server" and that "[m]edia content" includes "broadcast programming," "news," "newsgroups," and "chat rooms"), ¶ 41 (describing that "[s]upplemental content source 120 may be any suitable content source configured to provide real-time sports scores and game summary information . . . [and] sports commentary" as well as other "sports-related information" via "a plurality of real-time data feeds"); Ex. 1017, code (57) (describing "[a]n apparatus to

---

benefits for low-latency streaming when compared to the existing communication protocols" and that a person of ordinary skill in the art "would have appreciated the benefits associated with the websocket connection" described in Spivey. Ex. 1001 ¶ 110 (citing Ex. 1017 ¶¶ 43, 61, 74, 92; Ex. 1046, 46). The article cited by Dr. Wicker, provides further evidentiary support for Petitioner's position and Dr. Wicker's testimony. Ex. 1046, 46 (describing that the "WebSocket protocol enables full-duplex connection between a client and a remote host over a single TCP socket" and provides "three-to-one reduction in latency against half-duplex HTTP polling applications").

broadcast live event data in real-time" that receives "a topic entry from a message queue server" and pushes "the topic entry to a subscribed client device substantially simultaneously with the message queue server receiving the topic entry from the live data source"), ¶ 27 (describing techniques for broadcasting "media content in real-time" and that the "media content may comprise, for example, data from a live event (e.g., news event, a gaming event, sporting event, etc.)" and that "live event data (e.g., sports scores and breaking news)" also is broadcasted), ¶ 34 (describing "system 100 for broadcasting live data in real-time" that includes "client devices 110-1 through 110-a").

Petitioner's second, third, and fourth arguments and arguments relating to reasonable expectation of success (Pet. 22–24) also are supported by the evidence in the preliminary record showing that Ellis and Spivey both disclose that content is provided over the Internet. For instance, Ellis describes that "[c]ontent source 130 and supplemental content source 120 may be configured to transmit signals to user equipment 102 over any suitable communication paths 150 and 152" (Ex. 1016 ¶ 45) and that, in certain embodiments, content is delivered "on a particular network address (e.g., multicast address) on which an IP socket is currently joined." Ex. 1016 ¶¶ 45, 74. Also, Spivey describes "[a]n apparatus to broadcast live event data in real-time" that receives "a topic entry from a message queue server" and pushes "the topic entry to a subscribed client device substantially simultaneously with the message queue server receiving the topic entry from the live data source" and that the subscribed client device receives data over "a websocket connection." Ex. 1017, code (57) ¶¶ 43, 61, 74, 92; Ex. 1001 ¶ 110.

On the other hand, at this preliminary stage, we find that Patent Owner's arguments (Prelim. Resp. 23–35) and Dr. Rubin's related testimony are inconsistent with certain evidence in the preliminary record that supports Petitioner's position. For example, Patent Owner's first argument (Prelim. Resp. 22–26) and Dr. Rubin's related testimony that Petitioner's proposed combination is inoperable and departs from the express teachings of Ellis because Petitioner's proposed combination removes database 122 and replaces it with "Spivey's database-less system" is not consistent with evidence that Spivey discloses sources of data for transmission to client devices. For instance, Spivey discloses "data feeds" that are "generated by computing devices associated with a live event" and "data gathered by human observers of a live event and entered into an interface that communicates the gathered data." Ex. 1017 ¶ 37. Also, Spivey describes "broadcasting live data in real-time" (*id.* ¶ 34) and receiving "live data in the form of a topic entry," which may include "a score, a play, an error, an injury, a player-at-bat" when "the live event is a sporting event" (*id.* ¶ 48). Additionally, Ellis describes database 122 as optional stating that "sports-related information *may be* stored in database 122." Ex. 1016, Fig. 1, ¶ 42 (emphasis added).

Patent Owner also argues the proposed combination would be inoperable because Spivey's teachings "are not tied to video delivery" and Petitioner does not address "how immediately pushed data could somehow be throttled or gated in a manner to synchronize with any associated television programming." Prelim. Resp. 24. Patent Owner's argument (*id.*) and Dr. Rubin's related testimony are not consistent with evidence that Spivey describes its teachings as associated with broadcasting a live event.

For example, Spivey's system 100 broadcasts "live data in real-time" and includes "a subscription component . . . to receive a topic entry from a message queue server, and to push the topic entry to a subscribed client device." Ex. 1017, code (57), ¶ 31. Spivey also describes that its live data sources are "associated with a live event." *Id.* ¶ 37; *see also id.* ¶ 48 (describing that the topic entry "may include any media information about at least one of a live event (e.g., new, game, sport, activity, and so forth[)]"). Additionally, claim 19 requires only that the "first event information" and "second event information" are "germane" to "the first live sporting event" and "second live sporting event," respectively. Claim 19 does not recite that the first or second event information must be gated or synchronized with the first or second live sporting event, thus this argument is not commensurate with the scope of claim 19.

On the present record, Patent Owner's arguments relating to differences in the reference teachings and its arguments that Petitioner does not show a person of ordinary skill in the art would have had a reasonable expectation of success (Prelim. Resp. 26–31), and Dr. Rubin's testimony related to these arguments, appear to be based on incorrect characterizations of the evidence of record. For instance, Patent Owner argues that "Petitioner manufactures a data latency problem in Ellis, without any explanation as to why a POSITA would understand one to exist." Prelim. Resp. 27; Ex. 2001 ¶ 215. But Spivey describes that its techniques reduce latency, "providing a significant advantage over the conventional practices." Ex. 1017 ¶ 28; *see also id.* ¶ 96 (describing improvements of "at least two orders of magnitude" as compared to "conventional time periods of legacy devices"). Patent Owner's arguments that Ellis pertains to "viewing and tuning" and that

Spivey is not relevant to "how sports viewers commonly watch and interact with displayed sporting events" (Prelim. Resp. 27–29), as well as Dr. Rubin's related testimony, are based on only a subset of the teachings of both references, rather than the entirety of the teachings of the references in their entirety. For example, Ellis describes providing real-time data such as sports scores (*see, e.g.*, Ex. 1016 ¶ 41), and Spivey describes, for example, that its live data feeds are generated by computing devices associated with a live event (Ex. 1017 ¶ 37), as discussed above. We must consider the teachings of the references as a whole, from the perspective of an ordinarily skilled artisan. *See Sundance, Inc. v. DeMonte Fabricating Ltd.*, 550 F.3d 1356, 1361 n.3 (Fed. Cir. 2008) ("What a prior art reference discloses or teaches is determined from the perspective of one of ordinary skill in the art."); *In re Hedges*, 783 F.2d 1038, 1041 (Fed. Cir. 1986) (noting that when evaluating claims for obviousness, "the prior art as a whole must be considered").

We turn to Patent Owner's argument that the teachings of the references are not complementary because Petitioner does not address differences in the references and Petitioner does not show a person of ordinary skill in the art would have had a reasonable expectation of success. Prelim. Resp. 26–31. Patent Owner's argument and Dr. Rubin's related testimony appear to be contradicted by the cited teachings of the references. As discussed above, both references disclose providing content delivery for real-time sporting events quickly to multiple users over the Internet. *See, e.g.*, Ex. 1016, code (57), ¶¶ 39–41, 45, 74; Ex. 1017, code (57), ¶¶ 27, 34. Patent Owner's characterizations again are not based on the teachings of the references considered as a whole, from the perspective of an ordinarily

skilled artisan. *See Sundance*, 550 F.3d at 1361 n.3; *Hedges*, 783 F.2d at 1041.

Patent Owner's remaining arguments that Petitioner relies on impermissible hindsight bias to "reconstruct the invention" from "cherry-picked" prior art teachings (Prelim. Resp. 31–35) and Dr. Rubin's related testimony are premised on many of the same arguments we find unpersuasive at this stage. As discussed above, Petitioner's argument that its proposed combination would have been made to improve latency issues in Ellis's system (Pet. 19–21, 23) is supported by Spivey's disclosures. Spivey describes, for example, that "the data payload of the topic entry may be pushed to the subscribed connected client devices substantially simultaneously with the message queue server receiving the topic entry from a live data source, e.g., with a time delay of 100 milliseconds or less." Ex. 1017 ¶ 96. As shown in Figure 1 of Spivey, live data source(s) 140 is connected to client devices 110-1 through 110-a via message queue server 120 and live data access server 130. *Id.* at Fig. 1. Spivey describes that Figure 4 illustrates an embodiment of message queue server 120. *Id.* ¶ 53. Thus, based on the preliminary record before us at this juncture, we find that Petitioner's proposed substitution of message queue server device 410 and live data server device 450 into Ellis is consistent with Petitioner's rationale to combine the teachings of Ellis and Spivey, which is to reduce latency.

We find based on the preliminary record before us that Petitioner provides sufficient rationale to combine the teachings of Ellis and Spivey for purposes of institution. We also find that Petitioner has shown sufficiently for purposes of institution that a person of ordinary skill in the art would have had a reasonable expectation of success.

b) Objective Indicia of Non-Obviousness

Patent Owner asserts that objective indicia of non-obviousness support its position that Petitioner has not shown a reasonable likelihood of unpatentability of the challenged claims. *See* Prelim. Resp. 61–72. Specifically, Patent Owner asserts long-felt need, industry praise, Petitioner's praise and copying of the claimed invention, and commercial success support Patent Owner's position.

To accord substantial weight to objective evidence of nonobviousness, the evidence must have a nexus to the claims. *Fox Factory, Inc. v. SRAM, LLC*, 944 F.3d 1366, 1373 (Fed. Cir. 2019). "A showing of nexus can be made in two ways: (1) via a presumption of nexus, or (2) via a showing that the evidence is a direct result of the unique characteristics of the claimed invention." *Volvo Penta of the Americas, LLC v. Brunswick Corp.*, 81 F.4th 1202, 1210 (Fed. Cir. 2023). A patentee is entitled to a presumption of nexus "when the patentee shows that the asserted objective evidence is tied to a specific product and that product 'embodies the claimed features, and is coextensive with them.'" *Fox Factory*, 944 F.3d at 1373 (quoting *Polaris Indus., Inc. v. Arctic Cat, Inc.*, 882 F.3d 1056, 1072 (Fed. Cir. 2018)). As discussed below, Patent Owner has not shown nexus between the challenged claims and its asserted objective indicia of non-obviousness.

Starting with Patent Owner's arguments regarding praise and copying, we find that Patent Owner's arguments are conclusory based on the record at this early juncture. Patent Owner does not discuss a specific product or show that it embodies and is coextensive with the claimed features, nor does Patent Owner show that the evidence is a direct result of unique characteristics of the claimed invention. Although Patent Owner alleges copying, Patent Owner does not name a particular product of Petitioner's

that allegedly copied Patent Owner's products. *See* Prelim. Resp. 66–68. Rather, Patent Owner merely cites to a 62-page infringement claim chart from the related parallel proceeding. *Id.* at 67 (Ex. 2018). Patent Owner is reminded that "[a]rguments must not be incorporated by reference from one document into another document." 37 C.F.R. § 42.6(a)(3). At this stage, we decline to "play archeologist with the record" in order to understand Patent Owner's arguments, which "is precisely what the rule against incorporation by reference was intended to prevent." *Gen. Access Sols., Ltd. v. Sprint Spectrum L.P.*, 811 F. App'x 654, 657–58 (Fed. Cir. 2020). Further, Dr. Rubin's testimony submitted by Patent Owner merely includes a statement that Dr. Rubin "understand[s] that Patent Owner contends that the Petitioner launched its own sport's streaming platform and incorporated the claimed invention into its own products." Ex. 2001 ¶ 320. Dr. Rubin does not appear to have developed his own opinion regarding Petitioner's products. *Id.*

Dr. Rubin's testimony also includes reproductions of short e-mails including one regarding Patent Owner's work "around sports broadcast with social commentators, graphics and real time chat." Ex. 2001 ¶ 319 (citing Exs. 2016, 2017). Based on the record at this early juncture, we find that these emails alone do not support sufficiently that Petitioner had access to a patented product. For these reasons, and based on the present record, we accord Patent Owner's evidence of copying little to no weight.

Finally, Patent Owner's remaining arguments regarding nexus are limited to conclusory assertions and incorrect, over-simplified characterizations of the claimed technology. Prelim. Resp. 61–72. These arguments fail to establish an adequate nexus to the claims of the '697 patent.

Patent Owner's evidence does not establish *long felt* and *unsolved* need, describing "[b]roadcast latency [being] recognized by stream platforms around [the] mid-2010s" and citing an article from 2015, while the '697 patent claims priority to provisional applications filed in 2016 and 2017. Ex. 2001 ¶ 73; Ex. 2035; Prelim. Resp. 62–63; Ex. 1006, code (60), 1:20–40. Certain of Patent Owner's industry praise evidence does not appear to be disinterested. For example, Patent Owner quotes former NBA commissioner David Stern, but the articles cited describe Mr. Stern as "one of SportsCastr.Live's high-profile partners" and "a founding investor." Ex. 2007, 2; Ex. 2008, 1; Prelim. Resp. 65. Patent Owner acknowledges that commercial success would be shown by significant sales of the patented product but does not cite any evidence of such significant sales. Prelim. Resp. 68–72 (citing *Ormco Corp. v. Align Technology, Inc.*, 463 F.3d 1299, 1311–12 (Fed. Cir. 2006)).

Accordingly, on the present record, we are not persuaded that Patent Owner has demonstrated a nexus between the challenged claims and the asserted objective evidence of non-obviousness, and we additionally find certain of Patent Owner's evidence of objective indicia of non-obviousness to be flawed or incompletely developed.

For the above reasons, we do not accord substantial weight to Patent Owner's objective evidence at this stage.

> *c) Preamble 19.0: "A system for providing a first plurality of copies of a first broadcaster's live stream of digital content including first video-based commentary about a first live sporting event from a first broadcaster client device to a first plurality of viewer client devices, and for providing a second plurality of copies of a second broadcaster's live stream of digital content including second video-based commentary about a second live sporting event from a second broadcaster client device to a second plurality of viewer client devices, the system comprising"*

Petitioner argues to the extent the preamble is limiting, Ellis discloses the preamble. Pet. 24–26 (citing, e.g., Ex. 1016, code (57), ¶¶ 8, 11, 40, 45, 62–63, 74, Fig. 2B; Ex. 1001 ¶¶ 545–546, 580).[5] Petitioner relies on Ellis's disclosure of providing "enhanced information access and viewing functionality for sports-related programming," as well as Ellis's disclosure that sports-related programming includes "a sporting event, sports news, or sports commentary." *Id.* at 24 (quoting Ex. 1016 ¶¶ 8, 11). Petitioner argues that Ellis teaches the preamble because Ellis discloses a system providing "multiple live sporting events simultaneously available to any number of users," as shown in Figure 2B. *Id.* at 24–25 (citing Ex. 1016 ¶¶ 62–63, Fig. 2B).

Figure 2B of Ellis is reproduced below.

[5] We need not decide at this stage whether the preamble is limiting.

220

Tuner (222)	Primary Source ID (224)
1	<sourceid_2>
2	<sourceid_1>
3	<sourceid_8>
4	<sourceid_4>

230

Source ID (232)	Type (234)	Profile Score (236)
<sourceid_1>	Game	90
<sourceid_2>	Game	95
<sourceid_3>	Commentary	45
<sourceid_4>	News	75
<sourceid_5>	Movie	25
<sourceid_6>	Movie	35
<sourceid_7>	Highlights	65
<sourceid_8>	Game	80

FIG. 2B

Figure 2B illustrates tuner data tables 220 and 230 that are stored in memory 214 of control circuitry 110 (not shown in Figure 2B) that associate each of four tuners in column 222 with a primary sporting event or other sports-related content shown in source identifier column 224. Ex. 1016 ¶¶ 62–63, Fig. 2B.

Ellis discloses that "one sporting event is designated as the primary sporting event" and "[o]ne or more sporting events other than the primary sporting event may be designated as secondary sporting events." *Id.* ¶ 62. Ellis also discloses that "[t]he user may change or swap primary and/or secondary sporting events at any time." *Id.*

Petitioner also argues that Ellis "discloses multiple broadcasters providing copies of each broadcaster's live stream of digital content including live sporting event video-based commentary to a plurality of user devices" and that "[u]sers can select which content to receive." Pet. 25 (citing Ex. 1016 ¶¶ 39–40, 62, Fig. 2). Ellis discloses that user equipment device 102 "receives content . . . from content source 130," content source

130 "may be any suitable source of media content," and media content "includes broadcast programming." Ex. 1016 ¶ 40. Ellis discloses that although its Figure 1 shows "one instance" of content source 130, "in practice there may be numerous instances of content source 130." *Id.* ¶ 39. Ellis also discloses "[a]ny suitable number of users may have one or more user equipment devices, such as user equipment 102." *Id.*

Patent Owner does not specifically contest Petitioner's showing for the preamble of claim 19. *See* Prelim. Resp. 22–46. Petitioner's contentions are supported by the cited portions of Ellis. After consideration of the contentions and the evidence of record at this early stage, we find that Petitioner has shown sufficiently that Ellis teaches the preamble of claim 19 for purposes of institution.

d) Limitation 19.1: "A) a plurality of media sources to"

Petitioner argues that Ellis teaches limitation 19.1. Pet. 26–27 (citing e.g., Ex. 1016 ¶¶ 39–41, 45, 47, Fig. 1; Ex. 1001 ¶ 582). Petitioner argues that Ellis teaches limitation 19.1 because Ellis discloses content sources that "are 'any suitable source of media content' such as a 'Internet or network media/web server, or any other suitable facility or system for originating or distributing passive or interactive content to user equipment." *Id.* at 26 (quoting Ex. 1016 ¶ 40).

Figure 1 of Ellis, relied on by Petitioner for limitation 19.1, is reproduced below.

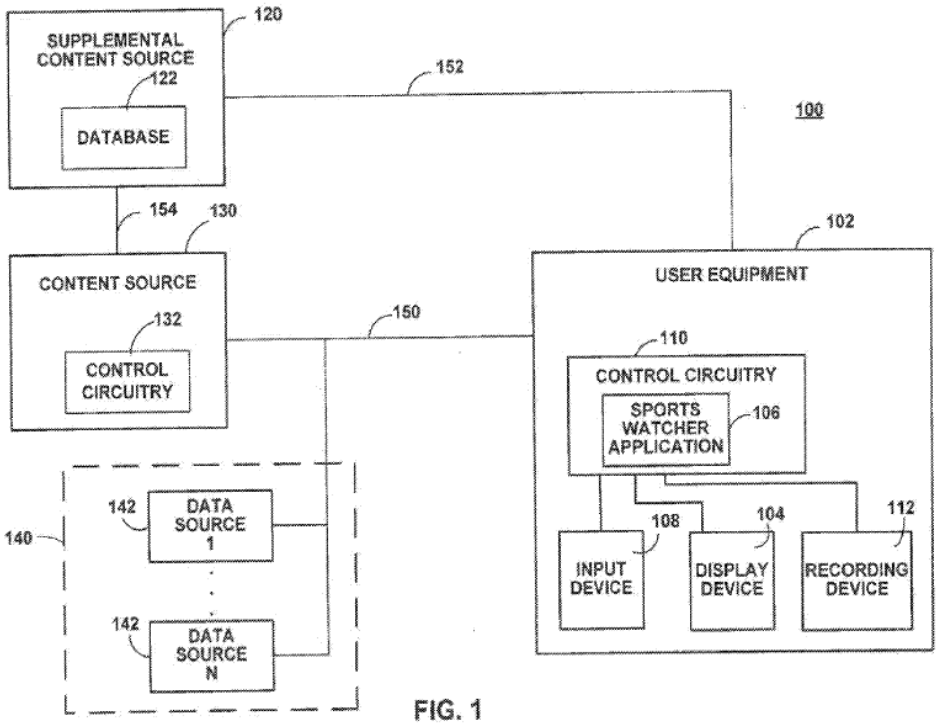

Figure 1 is a block diagram illustrating interactive media system 100. Ex. 1016 ¶¶ 15, 39.

Figure 1 shows interactive media system 100, which includes content source 130, as well as user equipment 102, supplemental content source 120, and data sources 140. *Id.* ¶ 39. Ellis describes that "[m]edia content that may be provided by content source 130 to user equipment 102 includes broadcast programming," "news," "newsgroups," "chat rooms," and "any other content capable of being displayed by, presented to, recorded, or interacted with, using user equipment 102." *Id.* ¶ 40. Furthermore, Ellis describes with respect to Figure 1, "although in practice there may be numerous instances of content source 130 and supplemental content source 120, for clarity only one instance of each source has been shown in the example of FIG. 1." *Id.* ¶ 39.

Patent Owner does not specifically contest Petitioner's showing for limitation 19.1. *See generally* Prelim. Resp. 22–46. Petitioner's contentions are supported by the cited portions of Ellis. After consideration of the contentions and the evidence of record at this early stage, we find that Petitioner has shown sufficiently that Ellis teaches limitation 19.1 for purposes of institution.

e) Limitation 19.2: "receive the first broadcaster's live stream of digital content and the second broadcaster's live stream of digital content"

Petitioner argues that Ellis teaches limitation 19.2. Pet. 27–28 (citing, e.g., Ex. 1016 ¶¶ 40, 45, 61, 62, 74; Ex. 1001 ¶ 583). Petitioner argues that Ellis teaches limitation 19.2 because Ellis discloses "that a user may 'actively watch one or more sporting events,' and the user 'may change or swap primary and/or secondary sporting events at any time.'" *Id.* at 28 (quoting Ex. 1016 ¶¶ 61–62).

As discussed with respect to limitation 19.1 (§ III.E.1.d), Ellis describes that "[m]edia content" includes "broadcast programming," "news," "newsgroups," "chat rooms," and "any other content capable of being displayed by, presented to, recorded, or interacted with, using user equipment 102." Ex. 1016 ¶ 40. As discussed with respect to the preamble (§ III.E.1.c), Ellis discloses a "primary sporting event" and "secondary sporting events." Ex. 1016 ¶ 62.

Patent Owner does not specifically contest Petitioner's showing for limitation 19.2. *See* Prelim. Resp. 22–46. Petitioner's contentions are supported by the cited portions of Ellis. After consideration of the contentions and the evidence of record at this early stage, we find that

Petitioner has shown sufficiently that Ellis teaches limitation 19.2 for purposes of institution.

f) Limitations 19.3 and 19.4

Limitations 19.3 and 19.4 are reproduced below.

> [1.3] provide a first copy of the first plurality of copies to a first viewer client device of the first plurality of viewer client devices via a first Internet communication channel between the plurality of media sources and the first viewer client device of the first plurality of viewer client devices; and
>
> [1.4] provide a first copy of the second plurality of copies to a first viewer client device of the second plurality of viewer client devices via a second Internet communication channel between the plurality of media sources and the first viewer client device of the second plurality of viewer client devices.

Ex. 1006, 64:9–20.

Petitioner argues that Ellis teaches limitations 19.3 and 19.4. Pet. 28–30 (citing, e.g., Ex. 1016 ¶¶ 39, 40, 45, 48, 55, 61, 62, 74, 94, 132, Fig. 2B; Ex. 1001 ¶¶ 549–553, 584–585). Petitioner argues that Ellis teaches "a first copy of the *first* plurality of copies to a first viewer client device of the *first* plurality of viewer client devices" and "a first copy of the *second* plurality of copies to a first viewer client device of the *second* plurality of viewer client devices"[6] because "Ellis discloses an 'interactive media system' where 'any suitable number of users' may 'select any game from the listing' of 'available games' to 'watch the selected game.'" *Id.* at 28 (citing Ex. 1016 ¶ 39, 94). Petitioner argues that Ellis describes providing the copies "via a first Internet communication channel" and "via a second Internet

[6] Emphases have been added to show how recitations are different.

communication channel," as recited in limitations 19.3 and 19.4, respectively, because Ellis describes exemplary content sources as an "internet or network media/web server" and Ellis describes "[f]or IPTV, tuned content may include content to be delivered on a particular network address (e.g., multicast address) on which an IP socket is currently joined." *Id.* at 29–30 (quoting Ex. 1016 ¶¶ 40, 48, 74).

Patent Owner does not specifically contest Petitioner's showing for limitations 19.3 and 19.4. *See generally* Prelim. Resp. 22–46. Petitioner's contentions are supported by the cited portions of Ellis. After consideration of the contentions and the evidence of record at this early stage, we find that Petitioner has shown sufficiently that Ellis teaches limitations 19.3 and 19.4 for purposes of institution.

> *g) Limitation 19.5: "B) a control server to periodically retrieve, via the Internet and from an event information provider, first event information germane to the first live sporting event and second event information germane to the second live sporting event"*

Petitioner argues that each of Ellis and Spivey teaches limitation 19.5. Pet. 30–32 (citing, e.g., Ex. 1016 ¶¶ 41, 42, 72, 117, 142, Fig. 1; Ex. 1017 ¶¶ 27, 35, 37, 48, 55, 66, 178, Fig. 4; Ex. 1001 ¶¶ 587–589). Petitioner argues that Ellis's supplemental content source 120 teaches limitation 19.5. *Id.* at 30–32 (citing ¶¶ 42, 72, 117, 142, Fig. 1; Ex. 1001 ¶¶ 587–588). Petitioner, alternatively, argues that Spivey's live data server device 450 teaches limitation 19.5. *Id.* at 32–35 (citing Ex. 1017 ¶¶ 27, 35, 37, 48, 55, 66, 178, Fig. 4; Ex. 1001 ¶ 589).

As discussed above with respect to Petitioner's motivation to combine (*see* § III.E.1.a), Petitioner's proposed combination of the teachings of Ellis and Spivey involves replacing Ellis's supplemental content source 120 with

Spivey's live data server device 450 and message queue server device 410, such that data would have been delivered using a websocket connection instead of HTTPS. *Id.* at 20–22 (citing, e.g., Ex. 1001 ¶¶ 106–115; Ex. 1016 ¶¶ 39–41, 156, Fig. 1; Ex. 1017 ¶¶ 27–28, code (57), Fig. 4). At this juncture, therefore, we rely on only Petitioner's arguments that Spivey teaches limitation 19.5. Petitioner's contentions are supported by the cited portions of Spivey.

Patent Owner does not specifically contest Petitioner's showing for limitation 19.5. *See generally* Prelim. Resp. 22–46. After consideration of the contentions and the evidence of record at this early stage, we find that Petitioner has shown sufficiently that Spivey teaches limitation 19.5 for purposes of institution. Also, we find that Petitioner provides sufficient rationale to combine the teachings of Ellis and Spivey for purposes of institution. *See* § III.E.1.a.

h) Limitation 19.6: "C) at least one socket server communicatively coupled to the control server to"

Petitioner argues that the combination of Ellis and Spivey teaches limitation 19.6. Pet. 35–37 (citing, e.g., Ex. 1016 ¶¶ 39–41, Fig. 1; Ex. 1017 ¶¶ 35, 45–47, 52–55, 96, Figs. 3, 4; Ex. 1001 ¶¶ 590–591). Petitioner argues that Spivey's message queue server device 410 discloses "the 697's socket server being communicatively coupled to a control server." *Id.* at 37. To illustrate its proposed combination, Petitioner provides an annotated, combined diagram of Ellis's Figure 1 and Spivey's Figure 4, which is reproduced below. Pet. 19.

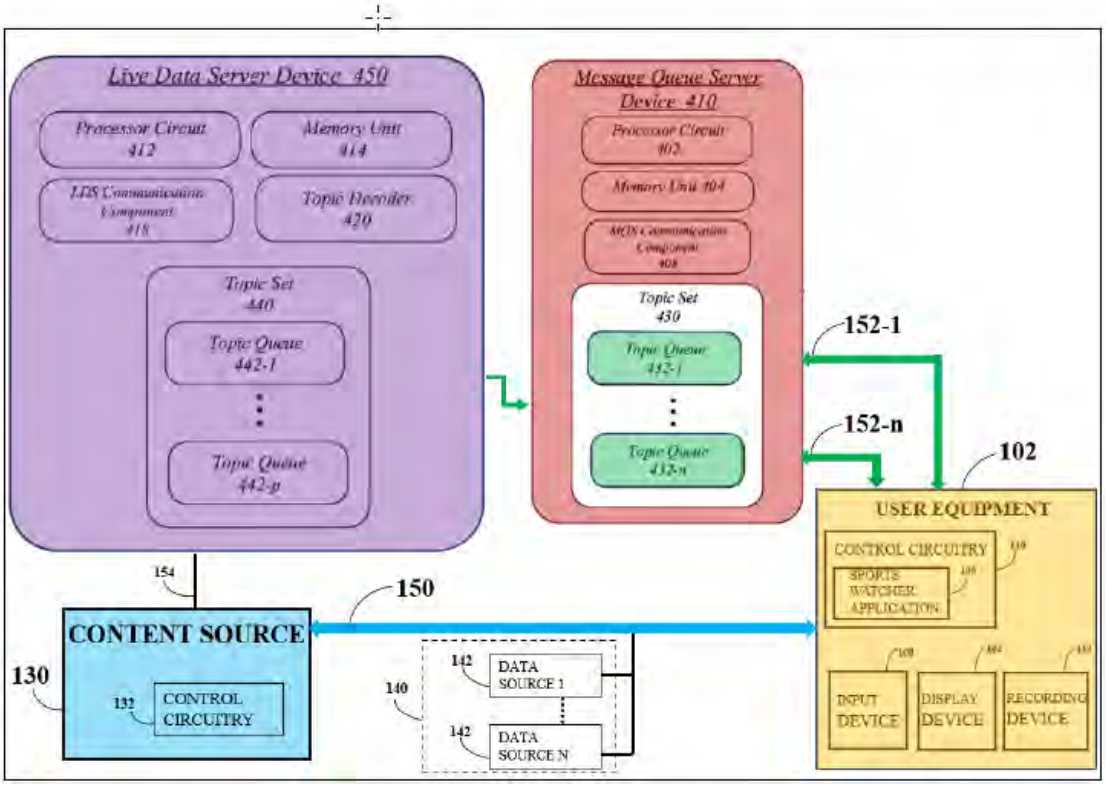

Petitioner's annotated diagram, above, illustrates, among other things, a combined diagram comprising Ellis's content source 130 and user equipment 102 shown in Ellis's Figure 1 and Spivey's live data server device 450 and message queue server device 410 shown in Spivey's Figure 4. Pet. 21.

As shown above, Petitioner's annotated, combined diagram includes Ellis's content source 130 (highlighted in blue), which is connected via connection 150 (also highlighted in blue) to Ellis's user equipment 102 (highlighted in yellow). *Id.* Petitioner's annotated, combined diagram also includes Spivey's data server device 450 (highlighted in purple), which is connected via connection 154 to content source 130 and also is connected via a connection illustrated as an arrow in Spivey's Figure 4 (highlighted in green) to Spivey's message queue server device 410 (highlighted in red). *Id.* Petitioner's annotated, combined diagram also shows that Spivey's message

queue server device 410 (highlighted in red) is connected via green arrows labeled 152-1 and 152-n to Ellis's user equipment 102. *Id.*[7]

As discussed with respect to limitation 19.5 (*see* § III.E.1.g), Petitioner argues Spivey's live data server device 450 teaches "a control server." *Id.* at 32–35 (citing Ex. 1017 ¶¶ 27, 35, 37, 48, 55, 66, 178, Fig. 4; Ex. 1001 ¶ 589). For limitation 19.6, Petitioner argues that Spivey's message queue server device 410 teaches "at least one socket server communicatively coupled to the control server." *See, e.g.*, *id.* at 37.

Patent Owner does not specifically contest Petitioner's showing for limitation 19.6. *See* Prelim. Resp. 22–46. Petitioner's contentions are supported by the cited portions of Ellis and Spivey. After consideration of the contentions and the evidence of record at this early stage, we find that Petitioner has shown sufficiently that the combination of Ellis and Spivey teaches limitation 19.6 for purposes of institution. Also, we find that Petitioner provides sufficient rationale to combine the teachings of Ellis and Spivey for purposes of institution. *See* § III.E.1.a.

i) Limitation 19.7: "receive from the control server at least some of the first event information and at least some of the second event information"

Petitioner argues that the combination of Ellis and Spivey teaches limitation 19.7. Pet. 37–38 (citing, e.g., Ex. 1017 ¶¶ 55, 117, Fig. 10; Ex. 1001 ¶ 592). Petitioner argues "Spivey's LDSD (control server) 'receive[s] live data and transmit[s] the data payloads to [MQSD (socket server)].'" *Id.* at 37 (quoting Ex. 1017 ¶ 55; alterations by Petitioner).

[7] Herein, the highlighting we refer to in Petitioner's annotated, combined diagram is Petitioner's annotation to Figure 1 of Ellis or Figure 4 of Spivey.

Patent Owner does not specifically contest Petitioner's showing for limitation 19.7. *See* Prelim. Resp. 22–46. Petitioner's contentions are supported by the cited portions of Ellis and Spivey. After consideration of the contentions and the evidence of record at this early stage, we find that Petitioner has shown sufficiently that the combination of Ellis and Spivey teaches limitation 19.7 for purposes of institution. Also, we find that Petitioner provides sufficient rationale to combine the teachings of Ellis and Spivey for purposes of institution. *See* § III.E.1.a.

j) Limitations 19.8 and 19.9

Limitations 19.8 and 19.9 are reproduced below.

> [19.8] the at least some of the first event information includes first score information for the first sporting event; and
>
> [19.9] the at least some of the second event information includes second score information for the second sporting event; and

Ex. 1006, 64:31–36.

Petitioner relies on its contentions for limitation 19.7. Pet. 38–39. For limitation 19.7, Petitioner argues that Spivey teaches that "[d]ata payloads may include 'a score, a player name, a play, and so forth.'" *Id.* at 37–38 (quoting Ex. 1017 ¶ 117); *see also id.* at 38 (reproducing Figure 10 illustrating user interface 1000 displaying topic 1002 including text 1006 stating "Ravens: 14; Steelers: 7"). Spivey also describes instructions "for receiving a plurality of data payloads from a plurality of topic queues." Ex. 1017 ¶ 117.

Petitioner also argues with respect to its proposed combination of Ellis and Spivey that Ellis teaches "multiple users may view one or more different

live events and receive related event information." Pet. 22 (citing Ex. 1016 ¶¶ 39–41, 45, 74). We find that Ellis's teachings in that regard support Petitioner's arguments for limitations 19.8 and 19.9. Specifically, Ellis describes providing "real-time sports scores and game summary information" to user equipment 102. Ex. 1016 ¶ 41. Ellis also describes that interactive media system 100 shown in Figure 1 may include "numerous instances of content source 130," as well as "[a]ny suitable number of users" having "one or more user equipment devices." *Id.* ¶ 39. Ellis further describes that interactive media system 100 shown in Figure 1 may include "numerous instances" of sources (*id.*) that "provide real-time sports scores and game summary information" to user equipment "as a plurality of real-time data feeds." *Id.* ¶¶ 39, 41. We consider Ellis's teachings in combination with Spivey's disclosure that "[l]ive data sources 140" in system 100 may include "data feeds." Ex. 1017 ¶¶ 37, Fig. 1.

Patent Owner does not specifically contest Petitioner's showing for limitations 19.8 and 19.9. *See* Prelim. Resp. 22–46. Petitioner's contentions are supported by the cited portions of Ellis and Spivey. After consideration of the contentions and the evidence of record at this early stage, we find that Petitioner has shown sufficiently that the combination of Ellis and Spivey teaches limitations 19.8 and 19.9 for purposes of institution. Also, we find that Petitioner provides sufficient rationale to combine the teachings of Ellis and Spivey for purposes of institution. *See* § III.E.1.a.

k) Limitations 19.10 and 19.11

Limitations 19.10 and 19.11 are reproduced below.

> [19.10] transmit at least the first score information the at least some of the first event information to the first viewer client device of the first plurality of viewer

> client devices via a third Internet communication channel between at least one first event socket of the at least one socket server and the first viewer client device of the first plurality of viewer devices; and
>
> [19.11] transmit at least the second score information of the at least some of the second event information to the first viewer client device of the second plurality of viewer client devices via a fourth Internet communication channel between at least one second event socket of the at least one socket server and the first viewer client device of the second plurality of viewer devices.

Ex. 1006, 64:37–51.

Petitioner argues that the combination of Ellis and Spivey teaches limitations 19.10 and 19.11. Pet. 39–43 (citing, e.g., Ex. 1016 ¶¶ 39–41, Fig. 1; Ex. 1017, code (57), ¶¶ 35–36, 38, 43, 46, 48–49, 51–52, 61, 66, 81–84, 96, 179, Fig. 9; Ex. 1001 ¶¶ 594–601). The dispute between the parties relates to the term "event socket." Prelim. Resp. 35–46.

For the recitation "transmit at least the first score information the at least some of the first event information to *the first viewer client device of the first plurality of viewer client devices*" and "transmit at least the second score information of the at least some of the second event information to *the first viewer client device of the second plurality of viewer client devices*" (emphases added), Petitioner relies on its arguments for limitations 19.3 and 19.4, which provides antecedent bases for the emphasized terms. Pet. 41–42 (citing § VIII.A.2.d of the Petition). Petitioner also points to Spivey's disclosure of pushing data from topic queues and Ellis's disclosure of providing real-time sports scores. *Id.* (citing Ex. 1017 ¶ 46; Ex. 1016 ¶ 41; Ex. 1001 ¶ 600). Patent Owner does not dispute these arguments made by

Petitioner, except to the extent discussed above with respect to Petitioner's motivation to combine. *See generally* Prelim. Resp.

We find Spivey's disclosures consistent with Petitioner's arguments based on the record at this early juncture. For example, Spivey describes "push[ing] data from topic queues 332-1, 332-n to the subscribers of the topics corresponding to those topic queues." Ex. 1017 ¶ 46. Spivey also describes live event data as including, for example, "sports scores." *Id.* ¶ 27; *see also id.* ¶ 48 (describing that "the data payload [topic entry] may include, for example, a score" of a sporting event). Ellis also describes providing to user equipment 102 "real-time sports scores." Ex. 1016 ¶ 41.

For the recitation "via a third Internet communication channel between at least one first *event socket* of the at least one socket server and the first viewer client device of the first plurality of viewer devices" and "via a fourth Internet communications channel between at least one second *event socket* of the at least one socket server and the first viewer client device of the second plurality of viewer devices" (emphases of disputed terms added), Petitioner argues that a person of ordinary skill in the art "would have understood that Spivey's topic queues disclose first/second event sockets." Pet. 41 (citing Ex. 1001 ¶¶ 596–599). As can be seen from Petitioner's annotated, combined diagram of Ellis's Figure 1 and Spivey's Figure 4, in Petitioner's proposed combination, topic queues 432-1 through 432-n are connected to user equipment 102 via communication paths 152-1 through 152-n. Pet. 21.

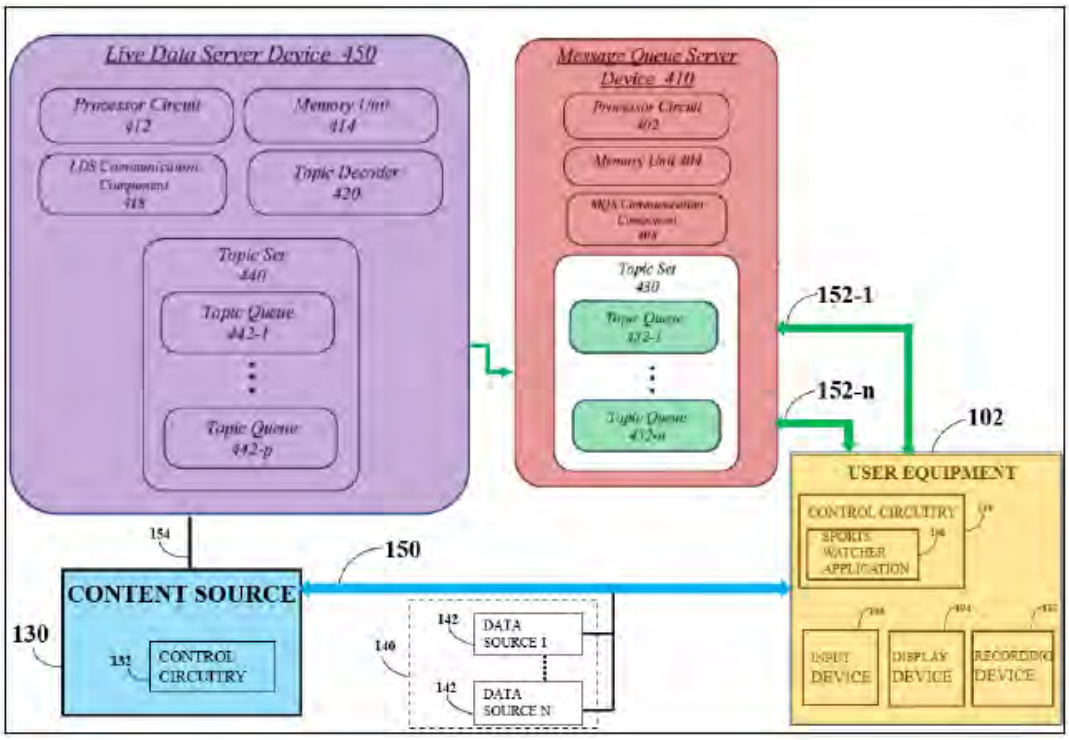

Petitioner's annotated diagram, above, illustrates, among other things, a combined diagram comprising Ellis's content source 130 and user equipment 102 shown in Ellis's Figure 1 and Spivey's live data server device 450 and message queue server device 410 shown in Spivey's Figure 4. Pet. 21.

As shown in Petitioner's annotated, combined diagram, Ellis's user equipment 102 (highlighted in yellow) is connected via communication paths 152-1 through 152-n (highlighted in green) to Spivey's message queue server device 410 (highlighted in red). *Id.* As also shown, Spivey's message queue server device 410 (highlighted in red) includes topic queues 432-1 through 432-n (highlighted in green) (*id.*), which Petitioner relies on for teaching the "*event socket*" recited in limitations 19.10 and 19.11. *See, e.g.*, Pet. 41.

Although Spivey's Figure 1, for example, describes that live data access server 130 is connected between message queue server 120 and client

devices 110-1 through 110-a (Ex. 1017, Fig 1), Petitioner argues that its proposed combination, in which message queue server device 410 is connected directly to Ellis's user equipment 102, is consistent with Spivey's disclosure because "Spivey also discloses that the message queue server device may be 'accessible to clients over the network directly.'" *Id.* at 40 n.8 (citing Ex. 1017 ¶¶ 36, 38, 46); *see also id.* at 40–41 (citing Ex. 1017 ¶¶ 81–84; Ex. 1001 ¶ 596–599) (providing additional explanation and reasoning to make the proposed combination).

Petitioner also argues that limitations 19.10 and 19.11 are taught because Spivey discloses that "client devices 'may request and participate in a websocket connection,' which 'typically comprises a two-way connection between two entities.'" *Id.* at 42 (quoting Ex. 1017 ¶¶ 43, 61). Petitioner also relies on (*id.*) Spivey's disclosure that message queue server device 410 comprises, for example, an "Internet server" and clients and servers communicate, for example, via "public networks such as the Internet." Ex. 1017 ¶¶ 35, 178; *see also id.* ¶ 179 (describing communicating via "a communications network," which may be "any one and the combination of wired and/or wireless networks including without limitation . . . a public network (e.g., the Internet).").

Patent Owner responds with three arguments. Prelim. Resp. 35–46. First, Patent Owner argues "Spivey does not disclose a 'websocket connection' or channel between its message queue server and client devices," "[r]ather, Spivey discloses a websocket connection between a live data access server and client devices," which Petitioner omitted without sufficient explanation. *Id.* at 36–39 (citing, e.g., Ex. 1017 ¶¶ 43, 53, 57, 61, 74, Figs. 1, 4; Ex. 2001 ¶¶ 225–233). Second, Patent Owner argues

"Petitioner fails to show that Spivey's topic queues are '*event sockets*' under Petitioner's (and its [declarant's)] implied definition, which requires them to be 'uniquely addressable communication endpoints.'" *Id.* at 39–45 (citing, e.g., Ex. 1017 ¶¶ 38–39, 46–54, 81–82, 128, 131, Fig. 7; Ex. 2001 ¶¶ 240–245, 247–252). Third, Patent Owner argues "Petitioner fails to articulate sufficient motivation to combine and modify the prior art." *Id.* at 45–46 (emphasis omitted).

We start with Patent Owner's first argument that "Spivey does not disclose a 'websocket connection' or channel between its message queue server and client devices," "[r]ather, Spivey discloses a websocket connection between a live data access server and client devices," which Petitioner omitted without sufficient explanation. *Id.* at 36–39 (citing, e.g., Ex. 1017 ¶¶ 43, 53, 57, 61, 74, Figs. 1, 4; Ex. 2001 ¶¶ 225–233).

Dr. Wicker testifies that a person of ordinary skill in the art "would have understood Spivey to disclose a direct connection between client devices and MQSD" and that a person of ordinary skill in the art "would have used this implementation because reducing the amount of server transfers would reduce latency, which is Spivey's main purpose." Ex. 1001 ¶ 597. In contrast, Dr. Rubin testifies "Spivey does not disclose a connection between the message queue server device and client devices." Ex. 2001 ¶ 231.

After weighing the testimony of Dr. Wicker and Dr. Rubin, based on the preliminary record, we find Dr. Wicker's testimony to be supported by the evidence of record and we, therefore, give Dr. Wicker's testimony more weight. Although we agree with Patent Owner and the testimony of Dr. Rubin to the extent that we find Spivey discloses live data access server 130

connected to client devices 110-1 through 110-a in certain embodiments (*see, e.g.*, Ex. 1017, Fig. 1), at this early stage, we also find that Spivey teaches or at least suggests a direct connection between message queue server device 410 and client devices 110-1 through 110-a.

For example, based on the preliminary record, we find that Petitioner's arguments and Dr. Wicker's testimony are supported by Spivey's disclosure that message queue server device 410 "may be substantially similar" to message queue server device 310 (Ex. 1017 ¶ 54 (cited in Pet. 36–37)) and "MQS communication component 308 [included in message queue server device 310] may . . . receive requests to subscribe to topics in a topic set 330, and may push data from topic queues 332-1, 332-n *to the subscribers of the topics corresponding to those topic queues*." *Id.* ¶ 46 (emphasis added) (cited in Pet. 42). Spivey also discloses that message queue server device 410 "may be implemented as a RABBITMQ[ ] server," which is an "open source message broker software." *Id.* ¶ 58.[8] Spivey describes in that embodiment, topic queues in message queue server device 410 "push the messages *to clients that have subscribed to the topic queues*." *Id.* (emphasis added).

Spivey discloses that its message queue server "may comprise one or more electronic devices capable of receiving, processing, and sending information *for the system 100*." *Id.* ¶ 35 (emphasis added) (cited in Pet. 34, 36, 42). Spivey further describes that message queue server 120 processes "live data to provide live data quickly *to the client devices 110-1 through*

[8] Paragraph 58 describes message queue server device 410 shown in Figure 4, which is relied on in the Petition. *See, e.g.*, Pet. 19–24, 32–43 (citing, e.g., Ex. 1017 ¶¶ 51–55, Fig. 4).

110-a." *Id.* ¶ 36 (cited in Pet. 40 n.8). Spivey also discloses clients and servers communicating information with each other over, "a packet-switched network (e.g., public networks such as the Internet)." *Id.* ¶ 178 (cited in Pet. 34).

Based on the preliminary record, we also find that Petitioner's arguments and Dr. Wicker's testimony that live data access server 130 is optional are supported by Spivey. For example, Spivey discloses that "system 100 *may* include a live data access server 130." *Id.* ¶ 38 (emphasis added) (cited in Pet. 40 n.8). Live data access server is described as "a public interface." *Id.* Furthermore, based on the preliminary record at this early juncture, we find that Spivey's disclosure that "[i]n some embodiments," message queue server is not accessible to clients "directly" because it is, for example, "behind a firewall" supports that Spivey teaches or at least suggests that the firewall is optional. *Id.* ¶ 36 (cited in Pet. 40 n.8).

Regarding Patent Owner's argument that "it is unclear how Spivey's message queue server device 410, which lacks an interface through which it could communicate with client devices, could include the claimed event socket" (Prelim. Resp. 39), we find based on the preliminary record, that Petitioner's argument and Dr. Wicker's testimony are supported by Spivey's disclosure of user interface 900 presented by live data app 210 residing on client device 200 that "allow[s] an operator 108 of a client device 110 to view and select topics of live data to subscribe to," which may comprise, for example, "the topics available from a message queue server." Ex. 1017 ¶ 84, Figs. 2, 9.

We also disagree with Patent Owner's argument that Spivey's live data access server was "omitted" without sufficient explanation. Prelim.

Resp. 36. Dr. Wicker testifies in his opinion a person of ordinary skill in the art "would have used this implementation [the implementation of system 100 with a direct connection between client devices and MQSD] because reducing the amount of server transfers would reduce latency, which is Spivey's main purpose." Ex. 1001 ¶ 597. At this early juncture, we find this explanation sufficient for purposes of institution.

We next turn to Patent Owner's second argument that "Petitioner fails to show that Spivey's topic queues are '*event sockets*' under Petitioner's (and its [declarant's)] implied definition, which requires them to be 'uniquely addressable communication endpoints.'" Prelim. Resp. 39–45 (citing, e.g., Ex. 1017 ¶¶ 38–39, 46–54, 81–82, 128, 131, Fig. 7; Ex. 2001 ¶¶ 240–245, 247–252). As discussed above with respect to claim construction (§ III.C.1), we determine that the term "event socket" means "a socket where sporting event information is provided." We determine the term "socket" means "a uniquely addressable communication endpoint on a server where event information is provided." *Id.*

Patent Owner argues that a person of ordinary skill in the art "would have understood that Spivey's 'topic queue' is merely an organization of data, such as a database table, that includes information about a particular topic" and that "Spivey nowhere discloses or suggests that the topic queues are 'uniquely addressable' or 'communication endpoints.'" Prelim. Resp. 40–41 (citing, e.g., Ex. 2001 ¶¶ 240–241). Dr. Rubin testifies that a person of ordinary skill in the art "would not consider a database, message queue, or any other internal data structure by themselves to be a 'uniquely addressable communication endpoint[ ]'" because "the queues themselves lack any address through which they communicate at all." Ex. 2001 ¶ 241. Dr. Rubin

also testifies that "[t]he only potential 'communication endpoint' Spivey discloses as being 'uniquely addressable' is the live data access server." *Id.*

Dr. Wicker testifies as follows:

> [T]his information [event information] is provided via a connection between a topic queue and the first user equipment device of the first and second plurality of user devices. Users can access the MQSD using a URL. *See* Ex.1017 ¶¶81–82. Then, the user can access the specific topic queue she wishes to receive information from by using a text string, *e.g.*, a topic label or Event ID, associated with a topic queue. *Id.* ¶179, Fig. 9 ("Gamecenter.nfl.ravenssteelers"). Thus, in my opinion a POSA would have understood that Ellis in view of Spivey discloses distributing event information from a first/second event socket of the socket server to a first user device or a first/second plurality of user devices over an internet connection. Further, it is my opinion that a POSA would have understood that the internet connection is established using a URL and text string identifying a uniquely addressable communication endpoint on the MQSD, where first event information is transmitted to a VCD.

Ex. 1001 ¶ 602.

Based on the preliminary record, we find that Petitioner's arguments and Dr. Wicker's testimony are supported by Spivey's disclosures that an "address may resemble a uniform resource locator (URL)" and that user interface 900 "allow[s] an operator 108 of a client device to view and select . . . topics available from a message queue server." Ex. 1017 ¶¶ 82, 84, Fig. 9. Based on the preliminary record, we find that Dr. Rubin's testimony is limited to addressing live data access server 130 and does not address sufficiently Spivey's teachings as a whole understood from the perspective of an ordinarily skilled artisan. *See Sundance*, 550 F.3d at 1361 n.3 ("What a prior art reference discloses or teaches is determined from the perspective of one of ordinary skill in the art."); *Hedges*, 783 F.2d at 1041 (noting that

when evaluating claims for obviousness, "the prior art as a whole must be considered"). We, therefore, give Dr. Rubin's testimony less weight than Dr. Wicker's testimony at this preliminary stage.

We now turn to Patent Owner's third argument that "Petitioner fails to articulate sufficient motivation to combine and modify the prior art." *Id.* at 45–46 (emphasis omitted). Patent Owner repeats its arguments that we address above with respect to Petitioner's reasoning to combine. *Compare* Prelim. Resp. 45–46, *with id.* at 22–35. For the reasons discussed above, we find based on the preliminary record before us at this early juncture that Patent Owner's arguments do not undermine Petitioner's showing. *See* § III.E.1.a.

In summary, with respect to limitations 19.10 and 19.11, after consideration of the arguments and evidence of both parties at this early juncture, we find that Petitioner's contentions are supported by the cited portions of Ellis and Spivey. We find that Patent Owner's arguments do not undermine Petitioner's showing. Based on the record at this preliminary stage, therefore, we find that Petitioner has shown sufficiently that the combination of Ellis and Spivey teaches limitations 19.10 and 19.11 for purposes of institution. Also, we find that Petitioner provides sufficient rationale to combine the teachings of Ellis and Spivey for purposes of institution. *See* § III.E.1.a. s

l) Conclusion—Claim 19 (Ground 1)

After consideration of the arguments and the evidence of record at this early stage, we determine that Petitioner has shown sufficiently, for purposes of institution, that the combination of Ellis and Spivey teaches or suggests all recitations in claim 19. Also, we find that Petitioner provides sufficient

rationale to combine the teachings of Ellis and Spivey for purposes of institution. *See* § III.E.1.a.

Based on the record at this preliminary stage, we conclude that Petitioner has demonstrated a reasonable likelihood that it would prevail in showing that claim 19 is unpatentable under 35 U.S.C. § 103 as obvious over Ellis and Spivey.

2. Independent Claims 23 and 27 (Ground 1)

Petitioner presents contentions that independent claims 23 and 27 would have been obvious over the combination of Ellis and Spivey. Pet. 49–50, 55–57. Patent Owner relies on the same arguments discussed with respect to claim 19. Prelim. Resp. 22.

Having reviewed Petitioner's arguments and evidence, we determine that Petitioner's showing that claims 23 and 27 would have been obvious over the combination of Ellis and Spivey is supported by the cited evidence and is not undermined by Patent Owner's arguments for the same reasons discussed with respect to independent claim 19. Accordingly, based on the record at this preliminary stage, we conclude that Petitioner has demonstrated a reasonable likelihood that it would prevail in showing that claims 23 and 27 are unpatentable under 35 U.S.C. § 103 as obvious over Ellis and Spivey.

3. Dependent Claims 20–22, 24, 25, and 28–30 (Ground 1)

Each of claims 20–22, 24, 25, and 28–30 depends from claim 19, 23, or 27. Petitioner provides a detailed analysis in support of its position that the combination of Ellis and Spivey teaches or suggests the limitations in dependent claims 20–22, 24, 25, and 29. Pet. 43–49, 50–55, 57–60.

Claim 28 recites the following:

> means for transmitting and receiving first chat information regarding the first live sporting event video-based commentary included in the first broadcaster's live stream of digital content via at least one first chat/system event Internet communication channel that is different from the first video communication channel and the first event information communication channel.

Ex. 1006, 68:8–15.

As discussed with respect to claim construction for claim 28, we understand that Petitioner has identified structure as follows: "Socket Server performing the algorithm disclosed in 20:17–25 and shown as socket server 600 in Figure 2 of the '697 patent." *See* § III.C. The cited portion of the written description of the '697 patent is reproduced below.

> In particular, one or more sockets of the socket server(s) 600 dedicated to the particular broadcaster's live stream allow respective client devices used by the broadcaster and their viewers to establish a chat/system event channel with the socket server(s), *such that chat messages/system event information is shared in a synchronized manner by the broadcaster of the live stream and corresponding viewers of copies of the live stream*.

Ex. 1006, 20:17–25 (emphasis added).

Because the structure identified as performing the recited function is described as sharing chat messages "in a synchronized manner" (*id.*), at this early juncture, we question whether Petitioner has shown sufficiently that a person having ordinary skill in the art would have combined Herzog, Spivey, and Ellis in the manner claimed. Specifically, Petitioner's contentions for this limitation do not appear to address how the combination of Herzog, Spivey, and Ellis teaches *synchronized* chat. *See* Pet. 57. However, because Petitioner demonstrates a reasonable likelihood of success in proving that at least one claim of the '697 patent is unpatentable, we institute on all grounds and all claims raised in the Petition. *See* 37 C.F.R. § 42.108(a).

We turn to claim 30, which recites "wherein the means for providing the first copy to the first viewer client device via a first video communication channel comprises" in the preamble. As discussed with respect to claim construction, we understand that Petitioner has identified structure corresponding to that means-plus-function recitation as follows: "HLS mother server, HLS child servers, and an HLS CDN shown as HLS server architecture 380 in Figure 8 performing the algorithm disclosed in 33:21–33 and Figures 9A–9D." *See* § III.C. At this juncture, neither party has argued that the preamble is limiting and, based on the preliminary record, we treat the preamble as non-limiting.

For limitation 30.1, Petitioner argues that Ellis teaches "streaming video from [a] content source . . . over the internet" and, therefore, a person of ordinary skill in the art "would have understood Ellis, filed in 2014, teaches all forms of standard internet transmission protocols, including HLS streaming." Pet. 57–58. For limitations 30.1 and 30.2, Petitioner relies on Ellis's disclosure of "a generic server," feeding "multiple systems at multiple facilities," and a "media system or network." *Id.* at 57–60.

At this early juncture, we question the sufficiency of Petitioner's showing. In particular, Ellis's disclosure of streaming video over the internet is broad and we question Petitioner's assertion that a person of ordinary skill in the art would have understood Ellis to teach HLS.

Because Petitioner demonstrates a reasonable likelihood of success in proving that at least one claim of the '697 patent is unpatentable, we institute on all grounds and all claims raised in the Petition. *See* 37 C.F.R. § 42.108(a).

For claims 20–22, 24, 25, and 29, we have reviewed Petitioner's assertions and the evidence in support thereof. Patent Owner does not separately challenge Petitioner's analysis for these dependent claims. Prelim. Resp. 61. Based on the record at this preliminary stage, we conclude that Petitioner has demonstrated a reasonable likelihood that it would prevail in showing that claims 20–22, 24, 25, and 29 are unpatentable under 35 U.S.C. § 103 as obvious over Ellis and Spivey.

F. Asserted Obviousness over Herzog, Spivey, and Ellis (Ground 2)

Petitioner asserts that claims 19–25 and 27–30 are unpatentable as obvious over Herzog, Spivey, and Ellis. Pet. 60–90. Patent Owner disputes Petitioner's showing. Prelim. Resp. 46–61.

1. Independent Claim 19 (Ground 2)

a) Motivation to Combine

Petitioner makes four arguments in support of its position that a person of ordinary skill in the art would have combined Herzog and Spivey, which are very similar to Petitioner's arguments made in support of its proposed combination of Ellis and Spivey. *Compare* Pet. 60–64, *with id.* at 19–23. For example, Petitioner argues that its proposed combination would have improved latency issues in Herzog's system. *Id.* at 60–64. Petitioner also argues that Herzog and Spivey relate to the same subject matter, the references solve the same or similar problems, and Spivey provides a complementary solution to Herzog. *Id.* at 63–64. Petitioner argues that a person of ordinary skill in the art would have had a reasonable expectation of success for the same reasons. *Id.*

Petitioner argues a person of ordinary skill in the art would have made its proposed combination of Herzog and Ellis "because a POSA would have understood that users would enjoy having more content options, *e.g.*, multiple live event streams, chat information, and advertising content." *Id.* at 65 (citing Ex. 1016 ¶¶ 39–41, Figs. 1, 2B; Ex. 1001 ¶¶ 156–157). Petitioner characterizes its proposed combination as "apply[ing] a known technique to a known device that was ready for improvement to yield a predictable result." *Id.* at 66 (Ex. 1001 ¶ 158). Petitioner also argues a person of ordinary skill in the art would have had a reasonable expectation of success "because Ellis specifically contemplates being implemented in a content delivery system such as Herzog, stating that it can be used with 'any suitable source of media content,' which includes IPTV content 'delivered on a particular network address (e.g., multicast address) on which an IP socket is currently joined.'" *Id.* (citing Ex. 1016 ¶¶ 39–40, 74; Ex. 1001 ¶¶ 158–63).

Patent Owner makes three arguments in support of its position that Petitioner has not shown that a person of ordinary skill in the art would have made Petitioner's proposed combination. Prelim. Resp. 46–60. First, Patent Owner argues that Petitioner's proposed combination is inoperable and departs from the express teachings of Herzog. *Id.* at 47–52. Second, Patent Owner argues Petitioner's reasons do not "withstand scrutiny" in part because of differences in the reference teachings and because Petitioner does not show a person of ordinary skill in the art would have had a reasonable expectation of success. *Id.* at 52–56. Third, Patent Owner argues Petitioner relies on impermissible hindsight bias to "reconstruct the invention." *Id.* at 56–60.

We start with Petitioner's argument that its proposed combination would have been made to improve latency issues in Herzog's system. Pet. 60–64. Petitioner's argument is supported by the same disclosures in Spivey that were discussed with respect to Ground 1. *See* § III.E.1.a. Patent Owner argues that Petitioner's proposed combination is inoperable and departs from the express teachings of Herzog because Herzog "needs the projected latency period to perform synchronization between the video/audio stream and the meta-data stream." Prelim. Resp. 48 (citing Ex. 1015 ¶¶ 74, 82; Ex. 2001 ¶¶ 293). Herzog describes that "live MPEG encoders may reach a latency that is greater than 32 seconds," "total latency in the video/audio data stream may be greater than 63 seconds," and "[t]he metadata, on the other hand, includes a latency that is less than a total of 2 seconds." Ex. 1015 ¶ 82.

Regarding Patent Owner's argument that Petitioner's proposed combination is inoperable (*see, e.g.*, Prelim. Resp. 48), based on the record before us at this early juncture, we find that Petitioner has shown sufficiently that its proposed combination is operable. Petitioner's proposed combination incorporates Spivey's technology that improves latency. *See, e.g.*, Ex. 1017 ¶¶ 27–28. Patent Owner's argument and Dr. Rubin's supporting testimony are based on improved latency causing inoperability, but Herzog teaches compensating for different types of data having different latencies. Ex. 1015 ¶ 82. Even to the extent that the resulting combination would have required processing a faster meta-data stream, it is well-settled that a preferred combination or device is not required. *See, e.g.*, *Novartis Pharm. Corp. v. West-Ward Pharm. Int'l Ltd.*, 923 F.3d 1051, 1059 (Fed. Cir. 2019) ("[O]ur case law does not require that a particular combination must be the

preferred, or the most desirable, combination described in the prior art in order to provide motivation for the current invention."); *PAR Pharm., Inc. v. TWI Pharms., Inc.*, 773 F.3d 1186, 1197–98 (Fed. Cir. 2014) (holding that it is not necessary to show that a combination is "the best option, only that it be a suitable option."). Additionally, claim 19 requires only that event information is "germane" to a live sporting event and does not recite that the event information must be synchronized with any live sporting event.

Relying on the testimony of Dr. Rubin, Patent Owner also argues that Petitioner's argument does not withstand scrutiny because "faster Herzog data . . . would not solve any video latency problem in Herzog because Herzog does not have a latency problem." Prelim. Resp. 52. Petitioner's argument and Dr. Wicker's testimony rely on Spivey's disclosures to support Petitioner's argument that Herzog has latency issues. Pet. 62–63; Ex. 1001 ¶ 144–145 (citing Ex. 1017 ¶¶ 27–28). Spivey describes that "[a]s technology allows users to receive such data away from desktop computers, the demand for live event data *in real time* on mobile devices has increased." Ex. 1017 ¶ 1 (emphasis added). Spivey describes that its technology reduces delay "providing *a significant advantage over the conventional practices*." *Id.* ¶ 28 (emphasis added). At this early juncture, we find that Petitioner's argument of motivation to achieve reduced latency is supported sufficiently for purposes of institution based on Spivey's disclosure of user "demand" for "live event data in real time" and that Spivey's technology would have been understood to provide "*a significant advantage over the conventional practices*." *Id.* ¶¶ 1, 28 (emphasis added).

At this early stage, upon consideration of Petitioner's argument and Dr. Wicker's testimony, as well as Patent Owner's argument and Dr.

Rubin's testimony, we find Petitioner has the better argument based on the preliminary record. We do not agree with Patent Owner's argument and Dr. Rubin's testimony that an alleged need to synchronize meta-data would undermine Petitioner's proposed combination. However, Herzog teaches synchronizing a faster meta-data stream. Ex. 1015 ¶ 82. Also, claim 1 does not recite expressly that the first event information must be synchronized with the first live sporting event.

We next turn to Petitioner's argument that a person of ordinary skill in the art would have made its proposed combination of Herzog and Ellis "because a POSA would have understood that users would enjoy having more content options, *e.g.*, multiple live event streams, chat information, and advertising content." Pet. 65 (citing Ex. 1016 ¶¶ 39–41, Figs. 1, 2B; Ex. 1001 ¶¶ 156–157). Patent Owner argues that Petitioner's proposed combination is inoperable because Petitioner does not explain "how Ellis's multi-tuner system could be modified in view of Herzog to account for the exponential technical complexity involved in timestamp matching across multiple live events" and Petitioner does not show how its proposed combination would have been "workable." Prelim. Resp. 51; *see also id.* at 56 (arguing Petitioner's motivation to combine does not withstand scrutiny for the same reason). Based on the record at this early juncture, we find that Petitioner's proposal to incorporate Ellis's teaching of providing more content options, such as options from multiple broadcasters (Pet. 65; Ex. 1001 ¶¶ 156–157), does not require that technological features of Ellis's tuning technology be incorporated into Herzog. *In re Keller*, 642 F.2d 413, 425 (CCPA 1981) ("The test for obviousness is not whether the features of a secondary reference may be bodily incorporated into the structure of the

primary reference," but, "[r]ather, the test is what the combined teachings of the references would have suggested to those of ordinary skill in the art."). Furthermore, Herzog teaches receiving four streams from four different imaging sources 48a–48d (Ex. 1015 ¶ 46), so Petitioner's proposed modification is merely that those four different streams may be from different broadcasters.

Patent Owner's arguments and Dr. Rubin's testimony that Petitioner's reasons do not "withstand scrutiny" in part because of differences in the reference teachings (*id.* at 52–56) rely on characterizations of the references that appear to be contradicted by the reference teachings at this early juncture. Petitioner's arguments (Pet. 63–64) are supported by the disclosures in Ellis and Spivey discussed with respect to Ground 1. *See* § III.E.1.a. Also, like Ellis and Spivey, Herzog provides content delivery for real-time events quickly to multiple users over the Internet. *See, e.g.*, Ex. 1015 ¶ 49 (describing publishing "video imagery, related audio and meta-data that are received from the content provider 42 onto the content delivery network 47 for presentation to users/consumers of the content via mobile devices such as device 45"), ¶ 51 (describing that an "Internet server provider (ISP)" may transfer data to local content delivery network 47), Figs. 1, 4, 7. Patent Owner's arguments and Dr. Rubin's testimony do not take into account the teachings of the references as a whole, from the perspective of an ordinarily skilled artisan. *See Sundance*, 550 F.3d at 1361 n.3; *Hedges*, 783 F.2d at 1041.

Patent Owner's arguments that Petitioner relies on impermissible hindsight bias to "reconstruct the invention" (Prelim. Resp. 56–60) and Dr. Rubin's related testimony rely on an incorrect characterization of the

Petition and the evidence in the preliminary record. As discussed above, Petitioner's arguments that a person of ordinary skill in the art would have made its proposed combination are sufficient for purposes of institution.

We find based on the preliminary record before us that Petitioner provides sufficient rationale to combine the teachings of Herzog, Spivey, and Ellis for purposes of institution. We also find that Petitioner has shown sufficiently for purposes of institution that a person of ordinary skill in the art would have had a reasonable expectation of success. Additionally, we do not accord substantial weight to Patent Owner's arguments relating to objective indicia of non-obviousness for the same reasons given with respect to Ground 1. *See* § III.E.1.b.

b) Element-By-Element Analysis (Ground 2)

For Ground 2, Petitioner's element-by-element analysis of claim 19 relies on many of the same disclosures in Spivey and Ellis that Petitioner relies on for obviousness over Ellis and Spivey (Ground 1). Because Petitioner's Ground 2 arguments overlap its Ground 1 arguments, we do not provide an element-by-element discussion of Petitioner's Ground 2 at this early stage. We have reviewed Petitioner's element-by-element analysis and the evidence in support thereof. Except as discussed below, we find that Petitioner's contentions are supported by the cited portions of Herzog, Spivey, and Ellis.

We provide additional guidance to the parties with respect to limitation 19.5. Specifically, for limitation 19.5, Petitioner relies on "Herzog's ERP [Enhanced Result Protocol] Server" and Ellis's "SCS [Supplemental Content Source]." Pet. 70–72 (citing, e.g., Ex. 1015 ¶¶ 45, 47, 50, Fig. 4; Ex. 1016 ¶¶ 41–42, 142). Yet Petitioner's proposed

combination does not incorporate Ellis's SCS. Pet. 60–66. Thus, at this preliminary stage, we are not persuaded by Petitioner's contentions regarding Ellis's supplemental content source 120 for teaching limitation 19.5 because, based on the current record, Petitioner has not shown sufficiently how Ellis's supplemental content source 120 would be part of Petitioner's proposed combination. Notwithstanding, we are persuaded preliminarily that "Herzog's ERP Server" teaches limitation 19.5. Pet. 70–72.

Although we rely on only Petitioner's arguments that "Herzog's ERP Server" teaches limitation 19.5 (Pet. 70–72), as discussed above (*see* § III.F.1.a), we find sufficient at this early juncture Petitioner's contentions that Ellis teaches multiple live event streaming and a person of ordinary skill in the art would have combined Ellis with Herzog and Spivey. Pet. 65–66. For limitation 19.7 reciting "receive from the control server at least some of the first event information and at least some of the second information" and for limitations 19.8 and 19.9 reciting that the event information includes first and second score information for the first and second sporting events, we find sufficient at this early juncture Petitioner's reliance on Ellis's disclosure of first and second event information, including first and second score information for first and second sporting events. Pet. 74–75. Specifically, Ellis describes providing "real-time sports scores and game summary information" to user equipment 102. Ex. 1016 ¶ 41. Ellis also describes that interactive media system 100 shown in Figure 1 may include "numerous instances of content source 130," as well as "[a]ny suitable number of users" having "one or more user equipment devices." *Id.* ¶ 39. Ellis further describes that interactive media system 100 shown in Figure 1 may include

"numerous instances" of sources (*id.*) that "provide real-time sports scores and game summary information" to user equipment "as a plurality of real-time data feeds." *Id.* ¶¶ 39, 41.

Additionally, Figure 2B of Ellis, relied on by Petitioner (*see, e.g.*, Pet. 65–66), is reproduced below.

220

222 Tuner	224 Primary Source ID
1	<sourceid_2>
2	<sourceid_1>
3	<sourceid_8>
4	<sourceid_4>

230

232 Source ID	234 Type	236 Profile Score
<sourceid_1>	Game	90
<sourceid_2>	Game	95
<sourceid_3>	Commentary	45
<sourceid_4>	News	75
<sourceid_5>	Movie	25
<sourceid_6>	Movie	35
<sourceid_7>	Highlights	65
<sourceid_8>	Game	80

FIG. 2B

Figure 2B illustrates tuner data tables 220 and 230 that are stored in memory 214 of control circuitry 110 (not shown in Figure 2B) that associate each of four tuners in column 222 with a primary sporting event or other sports-related content shown in source identifier column 224. Ex. 1016 ¶¶ 62–63, Fig. 2B. Ellis discloses that "one sporting event is designated as the primary sporting event" and "[o]ne or more sporting events other than the primary sporting event may be designated as secondary sporting events." *Id.* ¶ 62. Ellis also discloses that "[t]he user may change or swap primary and/or secondary sporting events at any time." *Id.*

With respect to limitations 19.10 and 19.11, Patent Owner argues "[a]s Petitioner does in Ground 1A, it again relies on Spivey as allegedly disclosing the claimed socket server or '*means for transmitting*' and teaching transmission of score information via a channel between an 'event socket' and a viewer client device." Prelim. Resp. 60. Patent Owner argues "[f]or the reasons stated above," Spivey "does not teach or render obvious the recited 'event socket.'" *Id.* at 61. For the same reasons given with respect to Ground 1 (*see* § III.E.1), we find that Patent Owner's arguments do not undermine Petitioner's showing at this early stage.

c) Conclusion—Claim 19 (Ground 2)

After consideration of the arguments and the evidence of record at this early stage, we determine that Petitioner has shown sufficiently, for purposes of institution, that the combination of Herzog, Spivey, and Ellis teaches or suggests all recitations in claim 19. Also, we find that Petitioner provides sufficient rationale to combine the teachings of Herzog, Spivey, and Ellis for purposes of institution. *See* §§ III.G.1.a.

Based on the record at this preliminary stage, we conclude that Petitioner has demonstrated a reasonable likelihood that it would prevail in showing that claim 19 is unpatentable under 35 U.S.C. § 103 as obvious over Herzog, Spivey, and Ellis.

2. Independent Claims 23 and 27 (Ground 2)

Petitioner presents contentions that independent claims 23 and 27 would have been obvious over the combination of Herzog, Spivey, and Ellis. Pet. 83, 86–87. Patent Owner relies on the same arguments discussed with respect to claim 19. Prelim. Resp. 46–61.

Having reviewed Petitioner's arguments and evidence, we determine that Petitioner showing that claims 23 and 27 would have been obvious over the combination of Herzog, Spivey, and Ellis is supported by the cited evidence and is not undermined by Patent Owner's arguments for the same reasons discussed with respect to independent claim 19. Accordingly, based on the record at this preliminary stage, we conclude that Petitioner has demonstrated a reasonable likelihood that it would prevail in showing that claims 23 and 27 are unpatentable under 35 U.S.C. § 103 as obvious over Herzog, Spivey, and Ellis.

3. Dependent Claims 20–22, 24, 25, and 28–30 (Ground 2)

Each of claims 20–22, 24, 25, and 28–30 depends from claim 19, 23, or 27. Petitioner provides a detailed analysis in support of its position that the combination of Herzog, Spivey, and Ellis teaches or suggests the limitations in dependent claims 20–22, 24, 25, 29, and 30.

Claim 28 recites the following:

> means for transmitting and receiving first chat information regarding the first live sporting event video-based commentary included in the first broadcaster's live stream of digital content via at least one first chat/system event Internet communication channel that is different from the first video communication channel and the first event information communication channel.

Ex. 1006, 68:8–15.

As discussed with respect to claim construction for claim 28, we understand that Petitioner has identified structure as follows: "Socket Server performing the algorithm disclosed in 20:17–25 and shown as socket server 600 in Figure 2 of the '697 patent." *See* § III.C. The cited portion of the written description of the '697 patent is reproduced below.

> In particular, one or more sockets of the socket server(s) 600 dedicated to the particular broadcaster's live stream allow respective client devices used by the broadcaster and their viewers to establish a chat/system event channel with the socket server(s), *such that chat messages/system event information is shared in a synchronized manner by the broadcaster of the live stream and corresponding viewers of copies of the live stream*.

Ex. 1006, 20:17–25 (emphasis added).

Because the structure identified as performing the recited function is described as sharing chat messages "in a synchronized manner" (*id.*), at this early juncture, we question whether Petitioner has shown sufficiently that a person having ordinary skill in the art would have combined Herzog, Spivey, and Ellis in the manner claimed. Specifically, Petitioner's contentions for this limitation do not appear to address how the combination of Herzog, Spivey, and Ellis teaches *synchronized* chat. *See* Pet. 80–82, 88. Because Petitioner demonstrates a reasonable likelihood of success in proving that at least one claim of the '697 patent is unpatentable, we institute on all grounds and all claims raised in the Petition. *See* 37 C.F.R. § 42.108(a).

We also provide guidance to the parties regarding claim 30, which recites "wherein the means for providing the first copy to the first viewer client device via a first video communication channel." As discussed with respect to claim construction, we understand that Petitioner has identified structure corresponding to that means-plus-function recitation as follows: "HLS mother server, HLS child servers, and an HLS CDN shown as HLS server architecture 380 in Figure 8 performing the algorithm disclosed in 33:21–33 and Figures 9A–9D." *See* § III.C. At this juncture, neither party has argued that the preamble is limiting and, based on the preliminary record, we treat the preamble as non-limiting.

For claims 20–22, 24, 25, 29, and 30, we have reviewed Petitioner's assertions and the evidence in support thereof. Patent Owner does not separately challenge Petitioner's analysis for the dependent claims. Prelim. Resp. 61. Based on the record at this preliminary stage, we conclude that Petitioner has demonstrated a reasonable likelihood that it would prevail in showing that claims 20–22, 24, 25, 29, and 30 are unpatentable under 35 U.S.C. § 103 as obvious over Herzog, Spivey, and Ellis.

IV. CONCLUSION

For the foregoing reasons, we determine that Petitioner has demonstrated that there is a reasonable likelihood that it would prevail in proving the unpatentability of at least one of the challenged claims of the '697 patent. We thus institute an *inter partes* review of all of the challenged claims of the '697 patent on all grounds asserted in the Petition. *See* 37 C.F.R. § 42.108(a).

Any findings or conclusions in this Decision are made only for the purposes of institution and are not dispositive of any issue. We have not made a final determination with respect to the patentability of any challenged claim. Our final determination will be based on the record as fully developed during trial, including any evidence or argument timely presented by the parties under our Rules.

V. ORDER

In consideration of the foregoing, it is hereby:

ORDERED that *inter partes* review of claims 19–25 and 27–30 of the '697 patent is hereby instituted on all grounds stated in the Petition; and

FURTHER ORDERED that pursuant to 35 U.S.C. § 314(c) and 37 C.F.R. § 42.4, notice is hereby given of the institution of a trial; the trial will commence on the entry date of this decision.

For PETITIONER:

W. Todd Baker
Michael Dinnella
KIRKLAND & ELLIS LLP
Todd.baker@kirkland.com
Michael.dinnella@kirkland.com

For PATENT OWNER:

Brian Eutermoser
Mikaela Stone
KING & SPALDING LLP
beutermoser@kslaw.com
mikaela.stone@kslaw.com

Trials@uspto.gov
571-272-7822

Paper 10
Date: March 17, 2025

UNITED STATES PATENT AND TRADEMARK OFFICE

BEFORE THE PATENT TRIAL AND APPEAL BOARD

GENIUS SPORTS LTD.,
Petitioner,

v.

SPORTSCASTR INC. d/b/a PANDA INTERACTIVE,
Patent Owner.

IPR2024-01310
Patent 11,039,218 B1

Before BARBARA A. PARVIS, JOHN A. HUDALLA, and SHARON FENICK, *Administrative Patent Judges*.

FENICK, *Administrative Patent Judge*.

DECISION
Granting Institution of *Inter Partes* Review
35 U.S.C. § 314

I. INTRODUCTION

Genius Sports Ltd. ("Petitioner") filed a Petition (Paper 1 ("Pet.")) requesting *inter partes* review of claims 1–15 ("challenged claims") of U.S. Patent No. 11,039,218 B1 (Ex. 1009, "the '218 patent"). SportsCastr Inc. (d/b/a PANDA Interactive) ("Patent Owner") filed a Preliminary Response. Paper 7 ("Prelim. Resp."). After authorization (Ex. 1060), Petitioner filed a Preliminary Reply (Paper 8, "Prelim. Reply) and Patent Owner a Preliminary Sur-reply (Paper 9, "Prelim. Sur-reply") relating to discretionary denial issues.

We have authority to determine whether to institute review under 35 U.S.C. § 314 and 37 C.F.R. § 42.4. We may institute an *inter partes* review if "the information presented in the petition . . . and any response . . . shows that there is a reasonable likelihood that the petitioner would prevail with respect to at least 1 of the claims challenged in the petition." 35 U.S.C. § 314.

Upon consideration of the contentions and the evidence of record at this preliminary stage, we determine that Petitioner has demonstrated a reasonable likelihood of prevailing on at least one of the challenged claims of the '218 patent. Accordingly, we grant Petitioner's request and institute an *inter partes* review of all challenged claims of the '218 patent and with respect to all grounds set forth in the Petition.

II. BACKGROUND

A. Real Parties-in-Interest

Petitioner identifies itself as the real party-in-interest. Pet. 3. Patent Owner names itself as the real party-in-interest. Paper 4 (Patent Owner's Mandatory Notices), 1.

B. Related Matters

Both parties identify, as a matter currently involving the ’218 patent, *SportsCastr Inc. v. Genius Sports Ltd.*, No. 2:23-cv-00471 (E.D. Tex.) (“related parallel proceeding”). Pet. 3; Paper 4, 1. Patent Owner also identifies *SportsCastr Inc. v. Sportradar Group, AG et al*., 2:23-cv-00472 (E.D. Tex.) as a matter involving the ’218 patent. Paper 4, 1.

The parties also identify that Petitioner filed a second petition challenging the ’218 patent in IPR2024-01311. Pet. 3–4; Paper 4, 1. Petitioner filed a document that ranks the petitions in the instant case and IPR2024-01311 and provides an explanation of the material differences between the petitions. *See* Paper 3 (Petitioner’s Reasons for Parallel Petitions and Petition Ranking). Petitioner ranks the instant Petition first, therefore we consider the merits of the instant petition.

Petitioner further identifies four other petitions challenging patents related to the ’218 patent in IPR2024-01305, IPR2024-01307, IPR2024-01308, and IPR2024-01309. Pet. 3–4.

C. The ’218 Patent

The ’218 patent is titled “Systems, Apparatus and Methods for Rendering Digital Content Relating to a Sporting Event with Online Gaming Information.” Ex. 1009, code (54). The ’218 patent relates to allowing low-latency viewing of broadcast digital content streams of live events, and synchronization of event information with viewed streams. *Id.* at 13:17–21. Figure 1A of the ’218 patent is reproduced below.

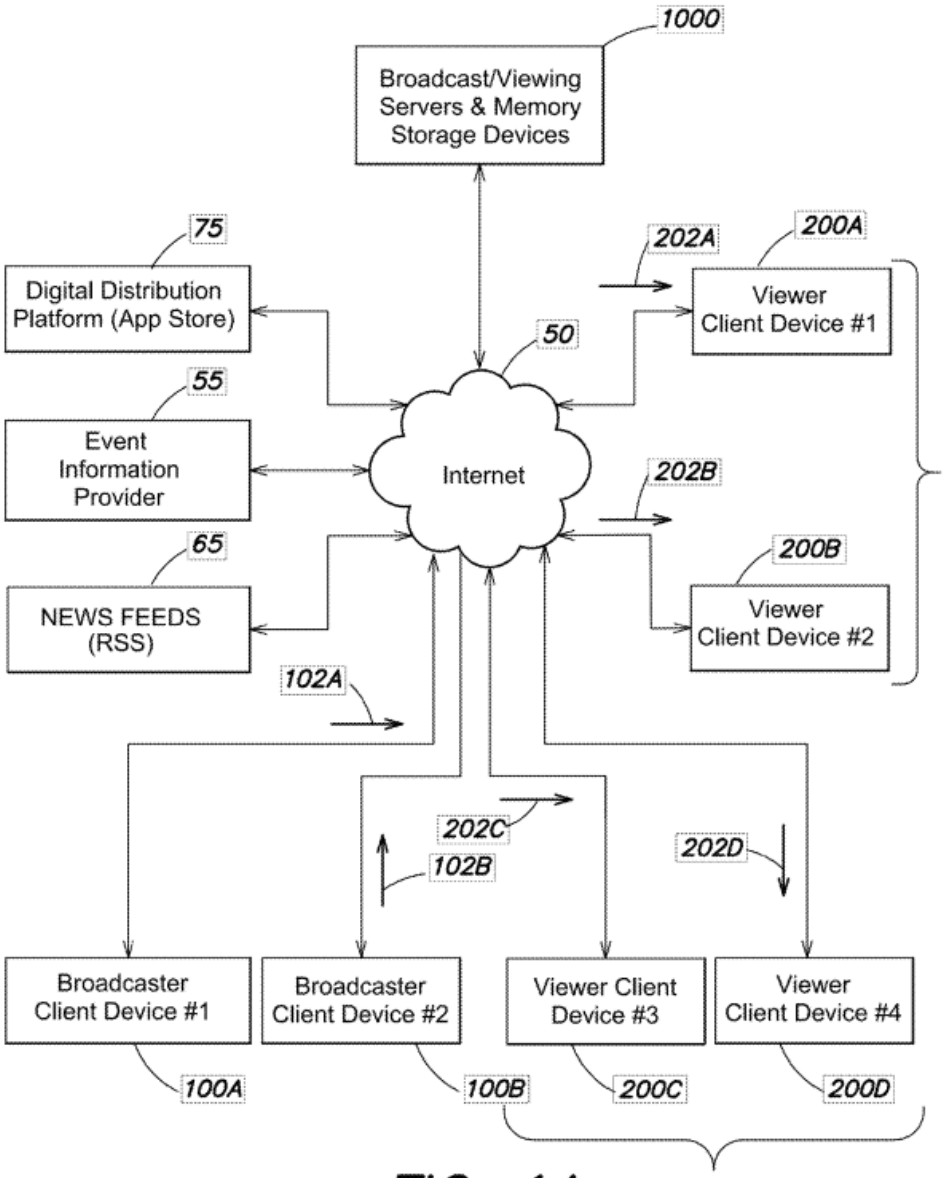

FIG. 1A

Figure 1A is a block diagram of a system to facilitate live streaming of digital content from multiple broadcasters to multiple viewers. *Id.* at 11:29–32.

The system shown in Figure 1A includes broadcaster client devices 100A and 100B, viewer client devices 200A–200D, broadcast/viewing servers and memory storage devices 1000, event information provider 55, one or more news feeds 65, and digital distribution platform 75, all coupled

together via Internet 50. *Id.* at 14:61–15:2. In Figure 1A, first broadcaster client device 100A provides first live stream of digital content 102A, and copies 202A and 202B of digital content 102A are received by viewer client devices 200A and 200B, respectively. *Id.* at 15:32–37. Similarly, second broadcaster client device 100B provides second live stream of digital content 102B, and copies 202C and 202D are received by viewer client devices 200C and 200D, respectively. *Id.* at 15:37–42. Broadcast/viewing servers and memory storage devices 1000 may retrieve news and/or event information germane to a live stream of digital content from news feeds 65 and event information provider 55 and convey the relevant news and/or event information to one or more client devices. *Id.* at 15:42–49.

Figure 2, reproduced below, is a block diagram of broadcast/viewing servers and memory storage devices 1000 in the system of Figure 1A. *Id.* at 11:36–38, 18:40–53.

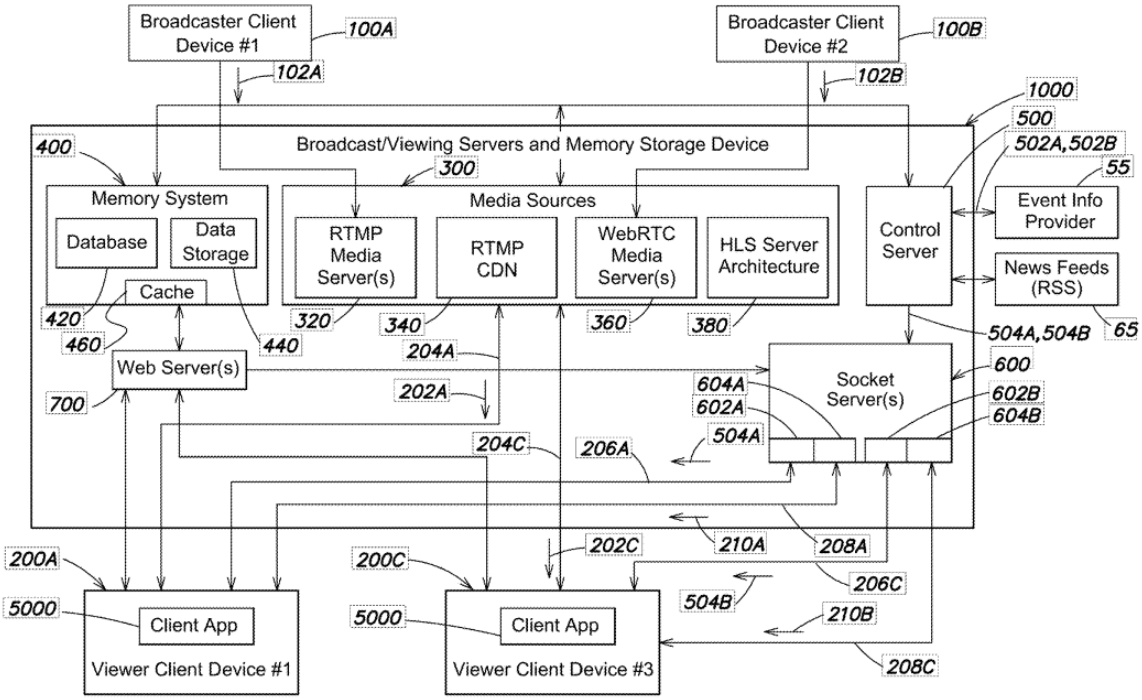

FIG. 2

Figure 2 is a block diagram of servers/memory storage devices 1000. *Id.* at 11:36–38, 18:40–53.

Figure 2 shows servers/memory storage devices 1000 including, in relevant part, a plurality of media sources 300, control server 500, one or more web servers 700, and socket server 600. *Id.* at 19:26–32, 19:57–60, 20:16–19. Media sources 300 receive live streams of digital content (102A, 102B) from broadcaster client devices (100A, 100B) and provide copies (202A, 202C) to viewer client devices (200A, 200C). *Id.* at 19:26–32, 21:14–40. Web server 700 supports an application programming interface to facilitate communication between servers/memory storage devices 1000 and client devices. *Id.* at 18:64–19:6. Control server 500 retrieves news and/or event information germane to the live streams of digital content (102A, 202C) from news feeds 65 and event information provider 55. *Id.* at 19:57–64. Socket servers 600 facilitate communication of synchronized event information retrieved by control server 500 to broadcaster and viewer client devices. *Id.* at 20:16–36. For example, control server 500 may retrieve first score information 504A for a first live sporting event and provide it to socket server 600, which establishes event socket 602A. *Id.* at 21:56–22:4. First viewer client device 200A connects to event socket 602A via a URL, and first score information 504A is transmitted to first viewer client device 200A. *Id.*

D. Illustrative Claims

Petitioner challenges claims 1–15 of the ’218 patent. Pet. 6. Claims 1 and 12 are independent, claims 2–11 depend, directly or indirectly, from claim 1, and claims 13–15 depend directly from claim 12. Ex. 1009, 57:35–

60:34. Independent claims 1 and 12, reproduced below, are illustrative of the claimed subject matter.

> 1. [1.0[1]] A system for controlling a plurality of viewer client devices to receive first digital content relating to a first sporting event and first event information germane to the first sporting event, the first event information including online gaming information, the system comprising:
>
> [1.1] A) a control server to periodically retrieve, via the Internet, the first event information germane to the first sporting event;
>
> [1.2.1] B) at least one socket server communicatively coupled to the control server to:
>
> receive from the control server at least the first event information; and
>
> [1.2.2] transmit at least some of the first event information, including the online gaming information, to at least a first viewer client device of the plurality of viewer client devices via a first event information Internet communication channel between a first event socket of the at least one socket server and the first viewer client device, [1.2.3] wherein the first event socket corresponds to the first event information germane to the first sporting event; and
>
> [1.3.1] C) at least one webserver communicatively coupled to the at least one socket server to transmit, to the first viewer client device:
>
> a first Internet address of a first media source to establish a first video Internet communication channel between the first media source and the first viewer client device to carry the first digital content relating to the first sporting event; and

[1] Herein we use Petitioner's designations for the elements of claim 1. Pet. 38–41, 55–68; Ex. 1010, 1.

> [1.3.2] a first socket address of the first event socket to establish the first event information Internet communication channel to carry the online gaming information.

Id. at 57:35–67.

> 12. [12.0[2]] A method for providing, to a first client device, first event information germane to a first sporting event, wherein the first event information includes first online gaming information relating to the first sporting event, the method comprising:
>
> [12.1] A) transmitting the first online gaming information to at least the first client device via a first event information communication channel between a first event socket of at least one socket server and the first client device, wherein the first event socket corresponds to the first event information germane to the first sporting event; and
>
> [12.2] B) transmitting at least one instruction to the first client device to cause the first client device to request a first copy of a first stream of digital content relating to the first sporting event and receive the first copy via a first video communication channel between at least one media source and the first client device, [12.3] wherein the first video communication channel is different than the first event information communication channel.

Id. at 59:43–62.

E. Evidence

Petitioner relies on the patent references summarized in the table below.

Name	Reference	Exhibit
Herzog	US 2015/0163379 A1, filed Dec. 11, 2013, published June 11, 2015	1015
Ellis	US 2014/0229992 A1, filed Apr. 22, 2014, published Aug. 14, 2014	1016

[2] Herein we use Petitioner's designations for the elements of claim 12. Pet. 24–31, 73–76; Ex. 1010, 3–4.

Name	Reference	Exhibit
Spivey	US 2016/0036910 A1, filed Aug. 4, 2014, published Feb. 4, 2016	1017

Petitioner also relies on the Declaration of Stephen B. Wicker, Ph.D. (Ex. 1001) to support its contentions that the challenged claims are unpatentable. Patent Owner relies on the Declaration of Aviel Rubin, Ph.D. (Ex. 2001) in support of its contentions that Petitioner has not shown that the challenged claims are unpatentable.

F. Asserted Grounds

Petitioner asserts that the challenged claims of the ’218 patent are unpatentable based on the following grounds summarized in the table below (Pet. 6):

Claim(s) Challenged	35 U.S.C. §[3]	References/Basis	Ground name
12–15	103	Ellis, Spivey	1A
1–11	103	Ellis, Spivey, Herzog	1B
1–9, 12–14	103	Herzog, Spivey	2A
10, 11, 15	103	Herzog, Spivey, Ellis	2B

III. 35 U.S.C. § 325(d) ANALYSIS

Patent Owner argues that the Petition should be denied under 35 U.S.C. § 325(d) because the asserted references are the same as or cumulative of references previously considered by the Office. Prelim. Resp.

[3] The Leahy-Smith America Invents Act (“AIA”), Pub. L. No. 112-29, 125 Stat. 284 (2011), amended 35 U.S.C. § 103, effective March 16, 2013. Because the challenged claims of the ’218 patent have an apparent effective filing date after March 16, 2013, the AIA version of § 103 applies. Ex. 1009, codes (22), (60), (63). Our determinations and findings herein would not change if the pre-AIA provisions applied.

19–35; Prelim. Sur-Reply. Petitioner argues that discretionary denial under § 325(d) is not appropriate. Pet. 84–87; Prelim. Reply.

Under 35 U.S.C. § 325(d), the Board may exercise discretion to deny a petition that presents the same or substantially the same art or arguments as were previously presented to the Office. To evaluate arguments for discretionary denial under § 325(d), the Board uses a two-part framework:

> (1) whether the same or substantially the same art previously was presented to the Office or whether the same or substantially the same arguments previously were presented to the Office; and
>
> (2) if either condition of first part of the framework is satisfied, whether the petitioner has demonstrated that the Office erred in a manner material to the patentability of challenged claims. If a condition in the first part of the framework is satisfied and the petitioner fails to make a showing of material error, the Director generally will exercise discretion not to institute *inter partes* review.

Advanced Bionics, LLC v. MED-EL Elektromedizinische Geräte GmbH, IPR2019-01469, Paper 6 at 8–9 (PTAB Feb. 13, 2020) (precedential) ("*Advanced Bionics*").

The *Becton, Dickinson* factors provide useful insight into how to apply the *Advanced Bionics* framework under 35 U.S.C. § 325(d). *Id.* at 9 (referencing *Becton, Dickinson & Co. v. B. Braun Melsungen AG*, IPR2017-01586, Paper 8, 17–18 (PTAB Dec. 15, 2017) (precedential as to § III.C.5, first paragraph) ("*Becton, Dickinson*"). *Becton, Dickinson* factors (a), (b), and (d) help to determine whether that the same or substantially the same art or arguments were not presented to the Office. *Advanced Bionics*, 10. These factors are: (a) the similarities and material differences between the asserted art and the prior art involved during examination; (b) the cumulative nature of the asserted art and the prior art evaluated during examination; and

(d) the extent of the overlap between the arguments made during examination and the manner in which Petitioner relies on the prior art or Patent Owner distinguishes the prior art. *Becton, Dickinson*, 17–18.

A. Prosecution History

During the prosecution of the application that issued as the ’218 patent, an information disclosure statement (IDS) was submitted by the applicant that identified a PCT Search Report and Written Opinion in PCT/US2018/033016 (“PCT Search Report”). *See* Ex. 1011,[4] 178–185 (IDS), 204–231 (PCT Search Report).

In the PCT Search Report, US 2008/0062318 A1 (“Ellis-318, Ex. 2036”) is labeled as a document considered to be relevant, with a relevance marker “A,” identifying it as a “document defining the general state of the art which is not considered to be of particular relevance.” Ex. 1011, 207; Pet. 85; Prelim. Resp. 21. Petitioner and Patent Owner each state that the Ellis reference asserted in the Petition is a continuation application of Ellis-318. Pet. 5 n.4, 85; Prelim. Resp. 22; Prelim. Reply 1. We note that this does not appear to be the case, though the references are related insofar as each contains a claim of priority to the same two provisional applications. Ex. 1006, code (60); Ex. 2036, code (60). Patent Owner asserts that the two applications “share identical specifications and figures.” Prelim. Resp. 21–22; Prelim. Sur-reply 1; Ex. 1016; Ex. 2036 (Ellis-318).

[4] Ex. 1011 is a certified file history for Application 17/141,631, which issued as the ’218 patent. *See* Ex. 1009, code (21). Patent Owner submitted Ex. 2035, which appears to be identical; we cite to Ex. 1011 for consistency.

Additionally, during the prosecution of the application that issued as the ’218 patent, the Examiner[5] issued a non-final rejection indicating the allowability of the issued claims, while provisionally rejecting them on the basis of nonstatutory double patenting. Ex. 1011, 337–49. In this rejection, the Examiner’s discussion included three references: US 2001/0001160 A1 (“Shoff,” Ex. 2037), US 2001/0039209 A1 (“DeWeese,” Ex. 2038), and US 2011/0083144 A1 (“Bocharov,” Ex. 2039). *Id.* at 341–48. The Examiner characterized Bocharov as “disclos[ing the] concept of streaming program content to [a] user’s device.” *Id.* at 341, 344, 346. The Examiner characterized DeWeese as “disclos[ing the] concept of streaming horse race program content and betting information to [a] user’s device.” *Id.* at 342, 345, 347. The Examiner characterized Shoff as “disclos[ing the] concept of providing the program information and its supplemental information to the user via two interface[s].” *Id.* at 343, 345, 347. Additionally, Bocharov was cited in the PCT Search Report with a relevance marker “X,” meaning “document of particular relevance,” and its disclosures were discussed extensively with reference to the pending claims in the PCT application. *Id.* at 207–29.

B. Advanced Bionics

Under the first part of the *Advanced Bionics* framework, previously presented art includes art listed on an IDS and “art made of record by the Examiner.” *Advanced Bionics*, 7–8.

---

[5] Patent Owner makes certain arguments relating to the author of the PCT Search Report. *See*, *e.g.*, Prelim. Resp. 23 (referring to consideration “by the PCT Examiner”); Prelim. Sur-reply 1 (“***two*** examiners considered Ellis-318”). For clarity, we note that our reference to “the Examiner” refers to examination at the USPTO.

We focus only on issues relating to Spivey, which we find to be dispositive. As discussed more extensively below, Sections IV.D.2, IV.E.1.d and IV.G.c, Petitioner relies in each ground on teachings from Spivey regarding Spivey's message queue server device, topic queues, topic queue labels, and subscriptions by client devices to these queues, in combinations with Ellis for Ground 1A and with Herzog for Ground 2A, and with additional references for Grounds 1B and 2B. *See, e.g.*, Pet. 25–29, 58–65, 67–68 (citing Ex. 1017 ¶¶ 35, 36, 45–47, 49, 51–55, 66, 81–82, 96, 104, Figs. 3, 4, 9).

Patent Owner argues that because the PCT Search Report discussed Bocharov, the Examiner "considered the teaching in Bocharov regarding the use of servers to stream program content to user devices." Prelim. Resp. 32. "Specifically, Bocharov disclosed the use of multiple generic servers to facilitate communication." *Id.* (citing Ex. 2039 ¶ 17); *see id.* at 31–32. Additionally, Patent Owner argues that Bocharov discloses that "[s]treaming media is multimedia that is constantly received by, and normally presented to, an end-user (using a client) while it is being delivered by a streaming provider (using a server)." Prelim. Resp. 31–32 (citing Ex. 2039 ¶¶ 2, 31); Prelim. Sur-reply 4. Patent Owner contends that in considering Bocharov, "the Examiner has already considered the disclosure of 'control server' and 'socket server' in the prior art in allowing the '218 patent." Prelim. Resp. 31.

However, we do not agree that the disclosures of Bocharov discussed in the PCT Search Report or referred to by the Examiner contain similar disclosures to those relied upon from Spivey by Petitioner. While Patent Owner correctly notes (Prelim. Sur-reply 4) that Bocharov is discussed

extensively in the PCT Search Report, the PCT Search Report explicitly notes that Bocharov is not relied on for "event socket," "socket server," "event identifier," among other related material, but rather explicitly relies on a different reference when discussing these elements of the claims at issue in the PCT application at the time. *See, e.g.*, Ex. 1011, 212, 214, 223, 224. Regardless of whether Bocharov teaches "the use of servers to stream program content to user devices" (Prelim. Resp. 32) or similar generic disclosures, the specific disclosures of Spivey relied upon by Petitioner are, based on the present record, not present in Bocharov.

Thus, in considering *Becton Dickinson* factors (a), (b), and (d), we conclude that (a) there are material differences between the asserted art, specifically, Spivey, and the prior art involved during examination; (b) none of the referenced discussed by the parties are cumulative of the asserted art, and (d) to the extent Bocharov might teach or suggest certain elements of the challenged claims, there is no overlap between arguments considered during examination and the manner in which Petitioner relies on Spivey in this proceeding.

For these reasons, we determine that the same or substantially the same art as involved in this proceeding was not previously presented to the Office, and thus, we do not proceed to part two of an *Advanced Bionics* evaluation and we do not exercise our discretion to deny the Petition under § 325(d).

IV. ANALYSIS

A. Legal Standards

A patent claim is unpatentable as obvious if the differences between the claimed invention and the prior art are such that the claimed invention,

as a whole, would have been obvious before the effective filing date to a person having ordinary skill in the art. *KSR Int'l Co. v. Teleflex Inc.*, 550 U.S. 398, 406 (2007). The question of obviousness is resolved on the basis of underlying factual determinations including: (1) the scope and content of the prior art; (2) any differences between the claimed subject matter and the prior art; (3) the level of ordinary skill in the art; and (4) when in evidence, objective evidence of nonobviousness, i.e., secondary considerations. *Graham v. John Deere Co.*, 383 U.S. 1, 17–18 (1966).

B. Level of Ordinary Skill in the Art

Petitioner asserts that a person of ordinary skill in the art

> would have had at least a bachelor's degree, or equivalent, in electrical engineering, computer engineering, computer science, or a related field or an equivalent number of years of working experience, and one to two years of experience in networking environments, including at least some experience with live-streaming network architecture.

Pet. 14 (citing Ex. 1001 ¶¶ 72–76). Petitioner additionally asserts that, "[a]dditional education or experience in related fields could compensate for deficits in the above qualifications." *Id.*

Patent Owner asserts:

> A person of ordinary skill in the art would have a bachelor's degree in electrical engineering, computer engineering, computer science, or equivalent degree and, in addition, approximately two years of work experience with Internet video streaming, Internet communication, and related protocols.

Prelim. Resp. 8 (citing Ex. 2001 ¶ 96).

The parties have not addressed whether the differences in these definitions impact the unpatentability analysis before us. We preliminarily adopt Patent Owner's formulation of the level of skill in the art, which is

more specific and appears consistent with the specification and prior art presented, but on the present record we would reach the same determination under Petitioner's formulation of the level of skill.

C. Claim Construction

We interpret the challenged claims

> using the same claim construction standard that would be used to construe the claim in a civil action under 35 U.S.C. 282(b), including construing the claim in accordance with the ordinary and customary meaning of such claim as understood by one of ordinary skill in the art and the prosecution history pertaining to the patent.

37 C.F.R. § 42.100(b). Under that standard, we generally give claim terms their ordinary and customary meaning, as would be understood by a person of ordinary skill in the art at the time of the invention, in light of the language of the claims, the specification, and the prosecution history. *Phillips v. AWH Corp*., 415 F.3d 1303, 1312–14 (Fed. Cir. 2005) (en banc).

1. "socket"/"event socket"

All independent claims include the term "event socket." Ex. 1009, 57:35–67, 59:43–62.

Petitioner argues that "a POSA would have understood a 'socket' to be a uniquely addressable communication endpoint on a server where first event information is provided to a VCD [viewer client device]." Pet. 26 (citing Ex. 1001 ¶ 170). Thus, Petitioner argues, an "event socket" is "a socket where information about one sporting event is provided to a VCD." *Id.*

At this time, Petitioner's proposed constructions of "socket" and "event socket" (Pet. 26) are not disputed by Patent Owner. Prelim. Resp. 8; *see id.* at 52–53 (using Petitioner's proposed construction).

At this preliminary stage in the proceeding, we use Petitioner's proposed construction for "socket" and "event socket."

2. "online gaming information"

Claim 1 recites "first event information germane to the first sporting event, the first event information including *online gaming information*," and claim 12 recites that "the first event information includes first *online gaming information* relating to the first sporting event." Ex. 1009, 57:35–67, 59:43–62 (emphasis added).

Patent Owner argues that, due to the structure of the claim, "online gaming information" is a distinct subset of "event information." Prelim. Resp. 58–59. Patent Owner additionally contends that such information would be "e.g., event information relevant to online gaming, such as odds, wins and losses, or other information relevant to placing bets." *Id.* at 58 (citing Ex. 2001 ¶ 240). Patent Owner appears to contend that Petitioner's citation of "sports score and game status information" (from Ellis) would not correspond to such "online gaming information." *Id.* at 59 (citing Pet. 24). Patent Owner additionally contends, with reference to Herzog, that "lap number, car speed and acceleration" relating to a car race would not teach or suggest "online gaming information." *Id.* at 70–71.

It does not appear that the '218 patent defines or describes "online gaming information." The closest references in the specification are two mentions of "game-related activities" that are said to include "online gaming, board games, chess matches, [and] role-playing games." Ex. 1009, 4:31–32, 8:16–17. These references do not support Patent Owner's assertion that "online gaming information" should be construed as requiring a relationship to placing bets. Dr. Rubin does not provide any evidence to

support the opinion that online gaming information would be "information relevant to placing bets." Ex. 2001 ¶ 240. However, even using Patent Owner's definition of "online gaming information" as requiring such information to be "relevant to placing bets" (Prelim. Resp. 58), Petitioner establishes a reasonable likelihood of prevailing in its unpatentability challenges, as we discuss in greater detail below. For purposes of this Decision, we apply Patent Owner's construction.[6]

3. Additional Claim Terms

Petitioner states that "[t]he claim terms of the '218 should be given their plain and ordinary meaning as understood by a person of skill in the art ('POSA')." Pet. 6. Petitioner does not propose an express construction for any other claim term. *See generally id.*

Patent Owner states "[e]xcept for the 'event socket' term for which Patent Owner applies Petitioner's implied construction . . ., for purposes of this preliminary response, Patent Owner agrees that no terms require construction and construes all other terms consistent with their plain and ordinary meaning." Prelim. Resp. 8.

We decline to provide further analysis or an express construction of any other claim term as doing so is not needed to resolve the dispute between the parties. *Realtime Data, LLC v. Iancu*, 912 F.3d 1368, 1375 (Fed. Cir. 2019) ("The Board is required to construe 'only those terms . . . that are in controversy, and only to the extent necessary to resolve the

[6] During the trial, the parties may wish to address whether this term is directed to the content of information and whether it should be accorded patentable weight. *See, e.g.*, *C R Bard Inc. v. AngioDynamics, Inc.*, 979 F.3d 1372, 1381–82 (Fed. Cir. 2020) (how to determine whether information claimed for communicative content should be accorded patentable weight).

controversy.'") (quoting *Vivid Techs., Inc. v. Am. Sci. & Eng'g, Inc.*, 200 F.3d 795, 803 (Fed. Cir. 1999)).

4. Post-Institution Claim Construction Arguments

The parties may provide additional arguments regarding the proper construction of the claim terms discussed above or other claim terms. To the extent that the parties rely upon claim construction arguments during the course of trial, these arguments should be explicit and should appear in a clearly designated section of briefing. Such arguments should "point out the specific portions of the specification, prosecution history, and relevant extrinsic evidence" to be considered, with explanations of the relevancy of that evidence to the arguments presented. *See* Patent Trial and Appeal Board Consolidated Trial Practice Guide,[7] 84 Fed. Reg. 64,280, at 44–49 (Nov. 2019).

D. Overview of Asserted Prior Art

1. Ellis (Exhibit 1016)

Ellis is titled "Systems and Methods for Providing Enhanced Sports Watching Media Guidance," and discloses systems and methods for accessing and displaying sports-related media content. Ex. 1016, codes (54), (57). Figure 1 of Ellis, reproduced below, illustrates an interactive media system. *Id.* ¶¶ 15, 39.

[7] Available at https://www.uspto.gov/TrialPracticeGuideConsolidated.

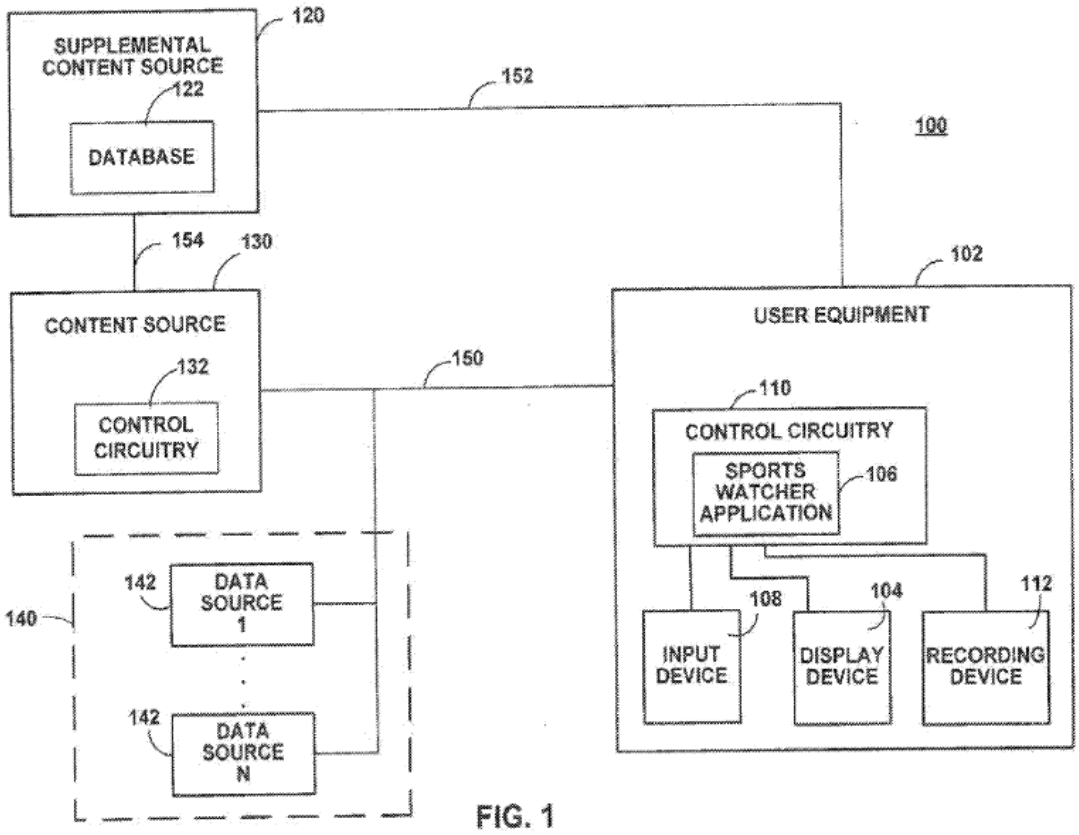

Figure 1 is a block diagram illustrating interactive media system 100. *Id.* ¶¶ 15, 39.

Figure 1 shows interactive media system 100 including user equipment 102, content source 130, supplemental content source 120, and data sources 140. *Id.* ¶ 39. User equipment device 102 receives media content, such as video broadcast programming, from content source 130 via communication path 150. *Id.* ¶¶ 39–40, Fig. 1. User equipment device 102 also receives content, such as real-time sports scores and game summary information, from supplemental content source 120 via communication path 152. *Id.* ¶¶ 39, 41, Fig. 1. Data sources 140 provide data for applications running on user equipment 102. *Id.* ¶ 46.

2. Spivey (Exhibit 1017)

Spivey is titled "Techniques to Broadcast Live Event Data in Real-Time," and discloses a system for broadcasting live event data in real-time. Ex. 1017, codes (54), (57). According to Spivey, its techniques "increase the speed at which live event data (e.g. sports scores and breaking news), are broadcast to mobile devices by using topic queues and open duplex communication connections, among other innovative techniques." *Id.* ¶ 27. Figure 1 of Spivey is reproduced below. *Id.* ¶¶ 3, 34.

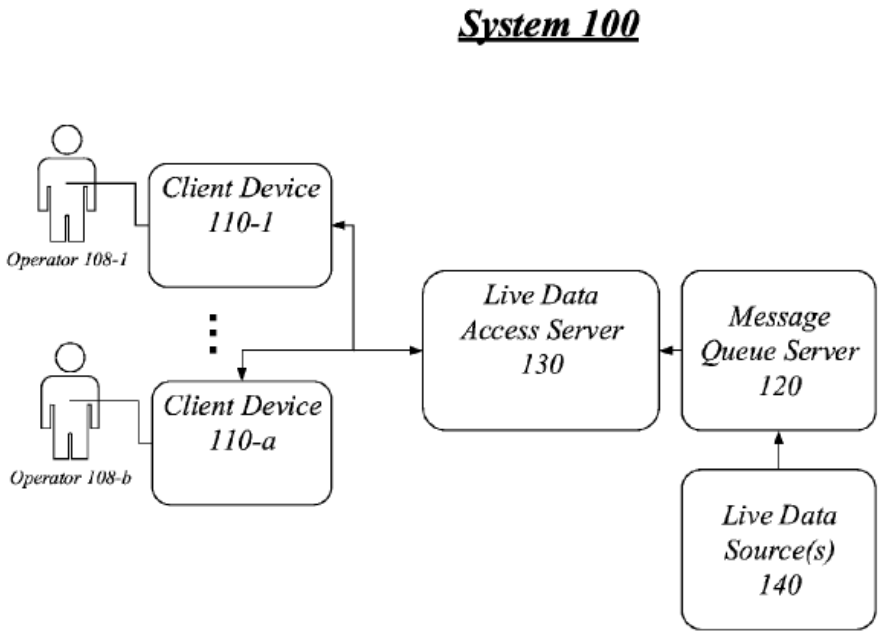

FIG. 1

Figure 1 illustrates system 100 for broadcasting live event data. *Id.* ¶¶ 3, 34.

Figure 1 shows system 100 including client devices 110-1 through 110-a, message queue server 120, and live data access server 130 coupled via one or more networks. *Id.* ¶ 34. Message queue server 120 receives live data from live data source(s) 140 and processes the live data so that it can be provided to client devices 110-1 through 110-a. *Id.* ¶¶ 35–37. Live data

access server 130 interfaces between message queue server 120 and client devices 110-1 and 110-a. *Id.* ¶ 38.

Figure 4 of Spivey, reproduced below, illustrates operating environment 400. *Id.* ¶¶ 6, 53.

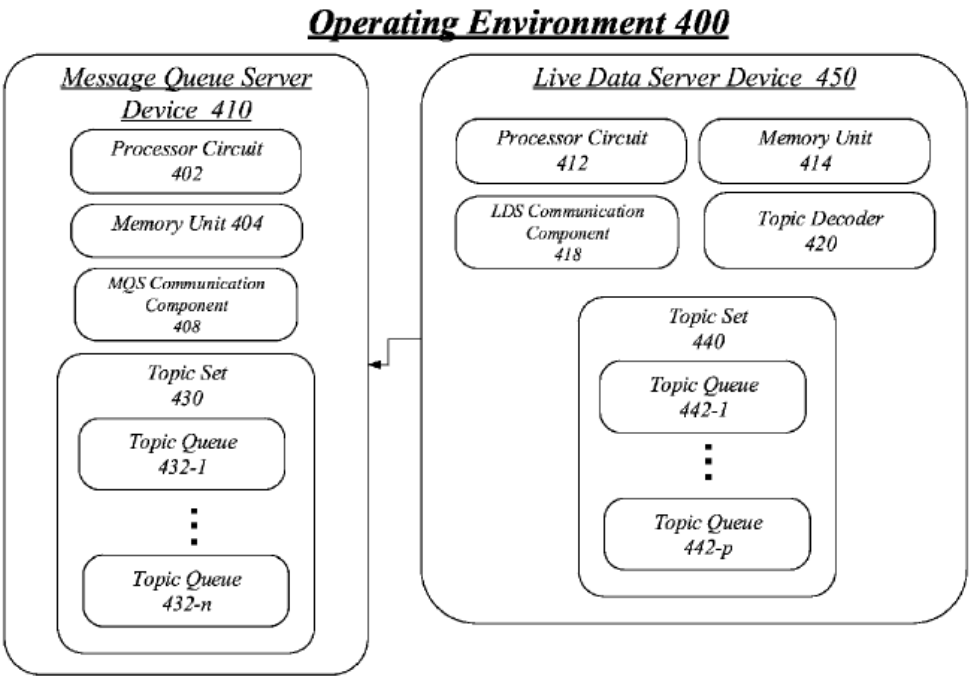

FIG. 4

Figure 4 illustrates operating environment 400. *Id.* ¶¶ 6, 53.

Figure 4 shows operating environment 400, in which message queue server 120 is implemented as message queue server device ("MQSD") 410 and live data server device 450. *Id.* ¶ 53. Message queue server device 410 includes communication component 408, topic set 430, and topic queues 432. *Id.* ¶ 54. Live data server device 450 includes live data server communication component 418 that allows live data server device 450 to receive live data and transmit it to message queue server device 410. *Id.* ¶ 55. Live data server device 450 also includes topic decoder 420, topic set 440, and topic queues 442. *Id.* ¶ 56.

3. *Herzog (Exhibit 1015)*

Herzog is titled "Time Synchronization of Video and Data Inside a Mobile Device," and discloses a mobile device including a processor configured to receive and format live video data, audio data, and meta-data for display on the mobile device, and synchronize selected meta-data with the video and audio for simultaneous display. Ex. 1015, codes (54), (57). Figure 4 of Herzog, reproduced below shows a system 40 that provides communications for mobile devices. *Id.* ¶¶ 9, 43.

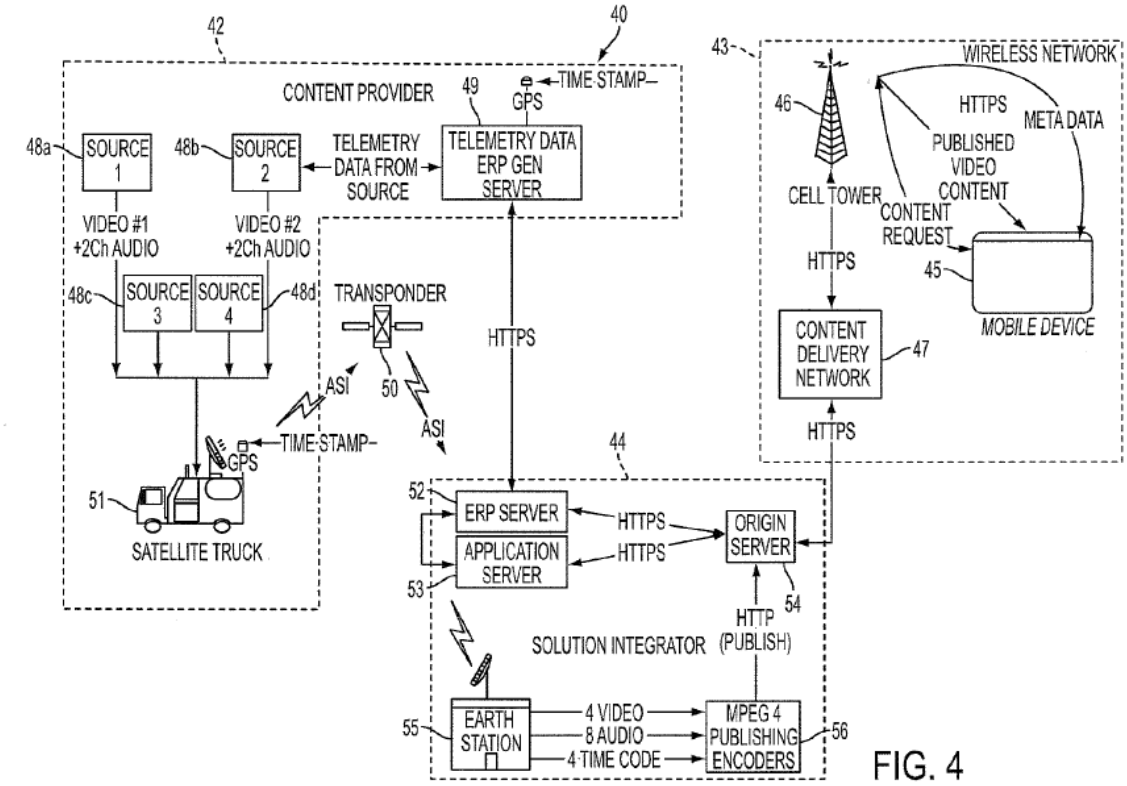

Figure 4 shows system 40 that provides communications to exemplary mobile device 45. *Id.* ¶¶ 9, 43.

As shown in Figure 4, system 40 provides communications to mobile device 45 in wireless network 43 via content delivery network 47. *Id.* ¶ 43. System 40 includes content provider 42, which provides video and audio data of an event occurring in real time, along with meta-data. *Id.* ¶ 45.

Content provider 42 provides video/audio streams from imaging sources 48*a*–48*d*. *Id.* ¶ 46. Content provider 42 also includes an Enhanced Result Protocol (ERP) generator server 49 configured to receive meta-data from imaging sources 48*a*–48*d*. *Id.* ¶ 47. ERP generator server 49 extracts meta-data parameters that may be of interest to a user, formats the extracted meta-data into a Hypertext Transfer Protocol Secure (HTTPS) protocol, and transmits the formatted meta-data to solution integrator 44. *Id.* Solution integrator 44 transmits the video/audio stream and meta-data to content delivery network 47 for delivery to mobile device 45. *Id.* ¶¶ 48–51.

E. Asserted Obviousness over Ellis and Spivey (Ground 1A)

Petitioner asserts that claims 12–15 are unpatentable as obvious over Ellis and Spivey. Pet. 19–34. Patent Owner disputes Petitioner's showing for independent claim 12. Prelim. Resp. 36–60.

1. Independent Claim 12 – Obviousness over Ellis and Spivey (Ground 1A)

a) Motivation to Combine

Petitioner's proposed combination of the teachings of Ellis and Spivey involves substituting Spivey's server devices that use websocket connection technology for Ellis's supplemental content source. Pet. 19–22 (citing, *inter alia*, Ex. 1001 ¶¶ 106–111; Ex. 1016 ¶¶ 39, 41, Fig. 1; Ex. 1017, Fig. 4). In particular, Petitioner argues that a person of ordinary skill in the art would have implemented Ellis's supplemental content source 120 with Spivey's live data server device 450 and message queue server device 410, such that data would have been delivered using a websocket connection instead of HTTPS. *Id.* at 18–20 (citing, e.g., Ex. 1001 ¶¶ 106–115; Ex. 1016 ¶¶ 39–41, 156, Fig. 1; Ex. 1017 ¶¶ 28, 96, Fig. 4). Ellis describes that its supplemental content source 120 provides real-time data feeds with sports-related

information, such as sports scores. *See, e.g.*, Ex. 1016 ¶ 41. Similarly, Spivey describes that its system including live data server device 450 and message queue server device 410 provides live event data, such as data about sporting events. *See, e.g.*, Ex. 1017 ¶ 28, Fig. 4.

Petitioner makes three arguments in support of its position that a person of ordinary skill in the art would have made its proposed combination. Pet. 20–24. First, Petitioner argues that its proposed combination would have been made to improve latency issues in Ellis's system. *Id.* at 20–22. Second, Petitioner argues that Ellis and Spivey relate to the same subject matter and the references solve the same or similar problems. *Id.* at 23. Third, Petitioner argues that its proposed combination would have been obvious because it "would have required only the simple substitution of known elements for another to obtain predictable results." *Id.* at 23–24. Petitioner takes the position that these same arguments support that a person of ordinary skill in the art would have had a reasonable expectation of success. *Id*. at 24.

Patent Owner makes three arguments in support of its position that Petitioner has not shown that a person of ordinary skill in the art would have combined the teachings of Ellis and Spivey. Prelim. Resp. 36–47. First, Patent Owner argues that Petitioner's proposed combination is inoperable and departs from the express teachings of Ellis because Petitioner's proposed combination removes Ellis's supplemental content source 120 having database 122 and replaces it with "Spivey's database-less system." *Id.* at 36–40. Second, Patent Owner argues Petitioner's reasons do not "withstand scrutiny" in part because of differences in the references' teachings and because Petitioner does not show a person of ordinary skill in

the art would have had a reasonable expectation of success. *Id.* at 40–45. Third, Patent Owner argues Petitioner relies on impermissible hindsight bias to "reconstruct the invention" from "cherry-picked" prior art teachings. *Id.* at 45–47.

For the reasons given below, we find that Petitioner's arguments are supported by the evidence in the preliminary record before us and that Patent Owner's arguments do not undermine Petitioner's showing. For instance, Petitioner's first argument, that its proposed combination would have been made to improve latency issues in Ellis's system (Pet. 20–22), is supported by Spivey's disclosure that its techniques "may reduce . . . delay [on the order of seconds (e.g., 30 to 45 seconds) or minutes] to an order of milliseconds (ms) (e.g., 100 ms) or less, providing a significant advantage over the conventional practices." Ex. 1017 ¶ 28. Spivey also discloses pushing data "to the subscribed connected client devices substantially simultaneously with the message queue server receiving the topic entry from a live data source, e.g., with a time delay of 100 milliseconds or less," which Spivey discloses is "at least two orders of magnitude shorter than conventional time periods of legacy devices." *Id.* ¶ 96*; see also id.* at code (57) (disclosing pushing "the topic entry to a subscribed client device substantially simultaneously with the message queue server receiving the topic entry from a live data source").[8]

---

[8] Petitioner's position is also supported by the testimony of Dr. Wicker that "[w]ebsockets protocol was an emerging technology that offered particular benefits for low-latency streaming when compared to the existing communication protocols" and that a person of ordinary skill in the art "would have appreciated the benefits associated with the websocket connection" described in Spivey. Ex. 1001 ¶ 110 (citing Ex. 1017 ¶¶ 43, 61,

Petitioner's second and third arguments and its arguments relating to reasonable expectation of success (Pet. 23–24) also are supported by the evidence in the preliminary record showing the similarity between, and complementary nature of, the Ellis and Spivey disclosures of providing content delivery for real-time events quickly to multiple users. *See, e.g.*, Ex. 1016, code (57) (describing "[s]ystems and methods for enhanced sports-related media content access and display"), ¶ 39 (describing that in system 100 "[u]ser equipment device 102 receives content . . . from content source 130 and/or supplemental content source 120 over communications paths 150 and 152, respectively" and "[a]ny suitable number of users may have one or more user equipment devices, such as user equipment 102"), ¶ 40 (describing that "[c]ontent source 130 may be any suitable source of media content" such as the "Internet or network media/web server" and that "[m]edia content" includes "broadcast programming," "news," "newsgroups," and "chat rooms"), ¶ 41 (describing that "[s]upplemental content source 120 may be any suitable content source configured to provide real-time sports scores and game summary information . . . [and] sports commentary" as well as other "sports-related information" via "a plurality of real-time data feeds"); Ex. 1017, code (57) (describing "[a]n apparatus to broadcast live event data in real-time" that receives "a topic entry from a message queue server" and pushes "the topic entry to a subscribed client

---

74, 92; Ex. 1046, 46). The article cited by Dr. Wicker provides further evidentiary support for Petitioner's position and Dr. Wicker's testimony. Ex. 1046, 46 (describing that the "WebSocket protocol enables full-duplex communication between a client and a remote host over a single TCP socket" and provides "three-to-one reduction in latency against half-duplex HTTP polling applications").

device substantially simultaneously with the message queue server receiving the topic entry from a live data source"), ¶ 27 (describing techniques for broadcasting "media content in real-time" and that the "media content may comprise, for example, data from a live event (e.g., news event, a gaming event, sporting event, etc.)" and that "live event data (e.g., sports scores and breaking news)" also is broadcasted), ¶ 34 (describing "system 100 for broadcasting live data in real-time" that includes "client devices 110-1 through 110-*a*").

Petitioner's second and third arguments and its arguments relating to reasonable expectation of success (Pet. 23–24) also are supported by the evidence in the preliminary record showing that Ellis and Spivey both disclose that content is provided over the Internet. For instance, Ellis describes that "[c]ontent source 130 and supplemental content source 120 may be configured to transmit signals to user equipment 102 over any suitable communication paths 150 and 152" (Ex. 1016 ¶ 45) and that, in certain embodiments, content is delivered "on a particular network address (e.g., multicast address) on which an IP socket is currently joined." Ex. 1016 ¶¶ 45, 74. Also, Spivey describes "[a]n apparatus to broadcast live event data in real-time" that receives "a topic entry from a message queue server" and pushes "the topic entry to a subscribed client device substantially simultaneously with the message queue server receiving the topic entry from a live data source" and that the subscribed client device receives data over "a websocket connection." Ex. 1017, code (57), ¶¶ 43, 61, 74, 92; Ex. 1001 ¶ 110.

On the other hand, at this preliminary stage, we find that Patent Owner's arguments (Prelim. Resp. 36–47) and Dr. Rubin's cited testimony

are inconsistent with certain evidence in the preliminary record that supports Petitioner's position. For example, Patent Owner's first argument (Prelim. Resp. 36–40) and Dr. Rubin's related testimony (Ex. 2001 ¶¶ 165, 168, 173, 182, 185, 187–191), that Petitioner's proposed combination is inoperable and departs from the express teachings of Ellis because Petitioner's proposed combination removes database 122 and replaces it with "Spivey's database-less system," is not consistent with evidence that Spivey discloses sources of data for transmission to client devices. For instance, Spivey discloses "data feeds" that are "generated by computing devices associated with a live event" and "data gathered by human observers of a live event and entered into an interface that communicates the gathered data." Ex. 1017 ¶ 37. Also, Spivey describes "broadcasting live data in real-time" (*id.* ¶ 34) and receiving "live data in the form of a topic entry," which may include "a score, a play, an error, an injury, a player-at-bat" when "the live event is a sporting event" (*id.* ¶¶ 47–48). Additionally, Ellis describes database 122 as optional stating that "sports-related information *may be* stored in database 122." Ex. 1016, Fig. 1, ¶ 42 (emphasis added).

Patent Owner also argues the proposed combination would be inoperable because Spivey's teachings "are not tied to video delivery" and Petitioner does not address "how immediately pushed data could somehow be throttled or gated in a manner to synchronize with any associated television programming." Prelim. Resp. 38. Patent Owner's argument (*id.*) and Dr. Rubin's related testimony (Ex. 2001 ¶¶ 168, 185, 194–198, 200–203) are not consistent with evidence that Spivey describes its teachings as associated with broadcasting a live event. For example, Spivey's system 100 broadcasts "live event data in real-time" and includes "a subscription

component . . . to receive a topic entry from a message queue server, and to push the topic entry to a subscribed client device." Ex. 1017, code (57), ¶ 31. Spivey also describes that its live data sources are "associated with a live event." *Id.* ¶ 37; *see also id.* ¶ 48 (describing that the topic entry "may include any media information about at least one of a live event (e.g., new, game, sport, activity, and so forth)"). Additionally, claim 12 requires only "first event information germane to a first live sporting event" and, on the present record and preliminarily, we determine that claim 12 not recite that the first event information must be gated or synchronized with the first live sporting event; thus, this argument is not commensurate with the scope of claim 12.

On the present record, Patent Owner's arguments relating to differences in the references' teachings and its arguments that Petitioner does not show a person of ordinary skill in the art would have had a reasonable expectation of success (Prelim. Resp. 40–45), and Dr. Rubin's testimony related to these arguments (Ex. 2001 ¶¶ 168, 187, 194–197, 202–204), appear to be based on incorrect characterizations of the evidence of record. For instance, Patent Owner argues that "Ellis and Spivey do not relate to the same subject matter . . . . Spivey delivers data —i.e., information; Ellis helps a viewer change a TV channel. Ellis therefore resides within a field that necessarily includes video delivery, unlike Spivey." Prelim. Resp. 42. But these arguments, and arguments that Ellis pertains to "viewing and tuning" and that Spivey is not relevant to "how sports viewers commonly ***watch*** and interact with displayed sporting events" (Prelim. Resp. 42–43), as well as Dr. Rubin's related testimony (Ex. 2001 ¶¶ 206–210, 212–215), are based on only a subset of the teachings of both

references, rather than the teachings of the references in their entirety. For example, Ellis describes providing real-time data such as sports scores (*see, e.g.*, Ex. 1016 ¶ 41) and Spivey describes, for example, that its live data feeds are generated by computing devices associated with a live event (Ex. 1017 ¶ 37), as discussed above. We must consider the teachings of the references as a whole, from the perspective of an ordinarily skilled artisan. *See Sundance, Inc. v. DeMonte Fabricating Ltd.*, 550 F.3d 1356, 1361 n.3 (Fed. Cir. 2008) ("What a prior art reference discloses or teaches is determined from the perspective of one of ordinary skill in the art."); *In re Hedges*, 783 F.2d 1038, 1041 (Fed. Cir. 1986) (noting that when evaluating claims for obviousness, "the prior art as a whole must be considered").

Patent Owner's remaining arguments that Petitioner relies on impermissible hindsight bias to "reconstruct the invention" from "cherry-picked" prior art teachings (Prelim. Resp. 45–47) and Dr. Rubin's related testimony (Ex. 2001 ¶¶ 165–168, 207–210) are premised on many of the same arguments we find unpersuasive at this stage. As discussed above, Petitioner's argument that its proposed combination would have been made to improve latency issues in Ellis's system (Pet. 20–22) is supported by Spivey's disclosures. Spivey describes, for example, that "the data payload of the topic entry may be pushed to the subscribed connected client devices substantially simultaneously with the message queue server receiving the topic entry from a live data source, e.g., with a time delay of 100 milliseconds or less." Ex. 1017 ¶ 96. As shown in Figure 1 of Spivey, live data source(s) 140 is connected to client devices 110-1 through 110-a via message queue server 120 and live data access server 130. *Id.* at Fig. 1. Spivey describes that Figure 4 illustrates an embodiment of message queue

server 120. *Id.* ¶ 53. Thus, based on the preliminary record before us at this juncture, we find that Petitioner's proposed substitution of message queue server device 410 and live data server device 450 into Ellis is consistent with Petitioner's rationale to combine the teachings of Ellis and Spivey, which is to reduce latency.

We find based on the preliminary record before us that Petitioner provides sufficient rationale to combine the teachings of Ellis and Spivey for purposes of institution. We also find that Petitioner has shown sufficiently for purposes of institution that a person of ordinary skill in the art would have had a reasonable expectation of success.

b) Objective Indicia of Non-Obviousness

Patent Owner asserts that objective indicia of non-obviousness support its position that Petitioner has not shown a reasonable likelihood of unpatentability of the challenged claims. *See* Prelim. Resp. 73–80. Specifically, Patent Owner asserts long-felt need, industry praise, Petitioner's praise and copying of the claimed invention, and commercial success support Patent Owner's position.

To accord substantial weight to objective evidence of nonobviousness, the evidence must have a nexus to the claims. *Fox Factory, Inc. v. SRAM, LLC*, 944 F.3d 1366, 1373 (Fed. Cir. 2019). "A showing of nexus can be made in two ways: (1) via a presumption of nexus, or (2) via a showing that the evidence is a direct result of the unique characteristics of the claimed invention." *Volvo Penta of the Americas, LLC v. Brunswick Corp.*, 81 F.4th 1202, 1210 (Fed. Cir. 2023). A patentee is entitled to a presumption of nexus "when the patentee shows that the asserted objective evidence is tied to a specific product and that product 'embodies the claimed features, and is

coextensive with them.'" *Fox Factory*, 944 F.3d at 1373 (quoting *Polaris Indus., Inc. v. Arctic Cat, Inc.*, 882 F.3d 1056, 1072 (Fed. Cir. 2018)). As discussed below, Patent Owner has not shown nexus between the challenged claims and its asserted objective indicia of non-obviousness.

Starting with Patent Owner's arguments regarding praise and copying, we find that Patent Owner's arguments are conclusory based on the record at this stage of the proceeding. Patent Owner does not discuss a specific product or show that it embodies and is coextensive with the claimed features, nor does Patent Owner show that the evidence is a direct result of unique characteristics of the claimed invention. Although Patent Owner alleges copying, Patent Owner does not name a particular product of Petitioner's that allegedly copied Patent Owner's products. *See* Prelim. Resp. 77–78. Rather, Patent Owner merely cites to a 38-page infringement claim chart from the related parallel proceeding. *Id.* at 77 (citing Ex. 2017). Patent Owner is reminded that "[a]rguments must not be incorporated by reference from one document into another document." 37 C.F.R. § 42.6(a)(3). At this stage, we decline to "play archeologist with the record" in order to understand Patent Owner's arguments, which "is precisely what the rule against incorporation by reference was intended to prevent." *Gen. Access Sols., Ltd. v. Sprint Spectrum L.P.*, 811 F. App'x 654, 657–58 (Fed. Cir. 2020). Patent Owner also relies on short e-mails including one regarding Patent Owner's work "around sports broadcast with social commentators, graphics and real time chat." Prelim. Resp. 77 (quoting Ex. 2016). Based on the current record, we find that these emails alone do not support sufficiently that Petitioner had access to a patented product. For

these reasons, and based on the present record, we accord Patent Owner's evidence of copying little to no weight.

Patent Owner's arguments regarding nexus are limited to conclusory assertions and incorrect, over-simplified characterizations of the claimed technology. Prelim. Resp. 74–80. These arguments fail to establish an adequate nexus to the claims of the '218 patent.

Patent Owner's evidence does not establish *long felt* and *unsolved* need, describing "[b]roadcast latency [being] recognized by stream platforms around [the] mid-2010s" (Ex. 2001 ¶ 73) and citing an article from 2015 (Ex. 2034) , while the '218 patent claims priority to provisional applications filed in 2016 and 2017. Prelim. Resp. 74; Ex. 1009, code (60). Certain of Patent Owner's industry praise evidence does not appear to be disinterested. For example, Patent Owner quotes former NBA commissioner David Stern, but the articles cited describe Mr. Stern as "one of SportsCastr.Live's high-profile partners" and "a founding investor." Ex. 2007, 2; Ex. 2008, 1; Prelim. Resp. 76. Commercial success would "usually [be] shown by significant sales in a relevant market." *Ormco Corp. v. Align Technology, Inc.*, 463 F.3d 1299, 1311–12 (Fed. Cir. 2006). However, while Patent Owner asserts commercial success, it cites no relevant evidence of sales, but relies mainly on evidence that Patent Owner advertised a product to show commercial success. Prelim. Resp. 79 (citing Ex. 2010; Ex. 2011).

Accordingly, on the present record, we are not persuaded that Patent Owner has demonstrated a nexus between the challenged claims and the asserted objective evidence of non-obviousness, and we additionally find

certain of Patent Owner's evidence of objective indicia of non-obviousness to be flawed or incompletely developed.

For the above reasons, we do not accord substantial weight to Patent Owner's objective evidence at this stage.

> *c) 12.0 - "A method for providing, to a first client device, first event information germane to a first sporting event, wherein the first event information includes first online gaming information relating to the first sporting event, the method comprising"*

Petitioner argues that, to the extent the preamble is limiting, Ellis discloses the preamble. Pet. 24–25 (citing Ex. 1016 ¶ 41, Fig. 1; Ex. 1001 ¶ 167).[9] Petitioner relies on Ellis's supplemental content source (SCS), which provides ""plurality of real-time data feeds," which can include "sports score and game status information" and "sports commentary." *Id.* at 24 (quoting Ex. 1016 ¶ 41).

Patent Owner disputes two aspects of Petitioner's showing with respect to the preamble of claim 12 in this ground. Prelim. Resp. 58–60. First, Patent Owner contends that Ellis's "sports score and game status information" does not teach or suggest "online gaming information" because it is not relevant to placing bets. Prelim. Resp. 59. Using Patent Owner's definition of "online gaming information" as requiring such information to be "relevant to placing bets" (Prelim. Resp. 58), on the present record, "sports score and game status information" would be such "information relevant to placing bets." *See* Ex. 1016 ¶ 116 ("Wager types may include

[9] As we determine, preliminarily and for the purposes of institution, that Petitioner sufficiently shows that the preamble would have been obvious in view of Ellis, we need not decide at this stage whether the preamble is limiting.

final score, half-time score, . . . or any other sports-specific wager type."); Ex. 1001 ¶¶ 88, 93 (Ellis "discloses an interactive system for watching sports content, including 'wagering and fantasy league support'" and Ellis's content provided includes "spread and wagering data" among other "sports-related information.") (citing/quoting Ex. 1016, code (57), ¶ 41); *see* Pet. 33–34, 81.

Patent Owner additionally argues that the cited "sports score and game status information" provided by Ellis's supplemental content source from its database is not present in the combination proposed by Petitioner, because the supplemental content source is replaced by Spivey's live data server device and message queue server device" and because "Petitioner does not even allege that the functionality of Ellis's supplemental content source would be maintained in the modified combination." Prelim. Resp. 59–60. However, the Petition proposes "*implementing* Ellis's [supplemental content source] using Spivey's [live data server device] and adding Spivey's [message queue server device]" resulting in a combined system that would "*upgrade* the supplemental content data delivery system." Pet. 21–22 (emphases added). Thus, Patent Owner's argument that the supplemental content server is merely replaced by these elements of Spivey is not commensurate with the Petitioner's proposed combination in which Ellis's supplemental content server is implemented by the Spivey elements. Additionally, as discussed above, Spivey's "data feeds" and "live data" (Ex. 1017 ¶¶ 34, 37, 48) and the fact that Ellis's database is optional (Ex. 1016 ¶ 42) teach or suggest, on the present record and preliminarily, that the information would still be available in the asserted combination.

Petitioner's contentions are supported by the cited portions of Ellis. After consideration of the contentions and the evidence of record at this preliminary stage, we find that Petitioner has shown sufficiently that Ellis teaches the preamble of claim 12 for purposes of institution.

> *d) Limitation 12.1 - "A) transmitting the first online gaming information to at least the first client device via a first event information communication channel between a first event socket of at least one socket server and the first client device, wherein the first event socket corresponds to the first event information germane to the first sporting event;"*

Petitioner asserts that, in the proposed combination of Ellis and Spivey, a topic queue as taught in Spivey, available from Spivey's message queue server device, is a uniquely addressable communication endpoint on a server where first event information is provided to a client. Pet. 25–27. Petitioner asserts that in Spivey, the client devices may request and participate in a websocket connection, and one of ordinary skill would have understood this to be a connection between a client and a socket server. *Id.* at 25–26 (citing Ex. 1017, code (57), ¶¶ 43, 61; Ex. 1001 ¶¶ 168–173). Petitioner cites the topic queues of Spivey's message server device, which are subscribed to by a client through topic label text strings, after which data is pushed to subscribed connected devices. *Id.* at 26–27 (citing Ex. 1017 ¶¶ 48, 49, 51–52, 66, 81–84, 96, Fig. 9). Thus, Petitioner argues, in the proposed combination, the Spivey topic queues and the Ellis content source teach or suggest a first event socket and the transmission of online gaming information to a client. *Id.* at 25–27 (citing Ex. 1001 ¶¶ 168–173).

Patent Owner responds with three arguments. Prelim. Resp. 47–58. First, Patent Owner argues "Spivey does not disclose a 'websocket

connection' or channel between its message queue server and client devices"; "[r]ather, Spivey discloses a websocket connection between a live data access server and client devices," which Petitioner omitted without sufficient explanation. *Id.* at 47–51 (citing, *inter alia*, Ex. 1017 ¶¶ 43, 51, 53, 57, 61, 74, Figs. 1, 4; Ex. 2001 ¶¶ 220–225, 227–229). Second, Patent Owner argues "Petitioner fails to show that Spivey's topic queues are '*event sockets*' under Petitioner's (and its [declarant's]) implied definition, which requires them to be 'uniquely addressable communication endpoint[s].'" *Id.* at 51–57 (citing Ex. 1017 ¶¶ 38–39, 46–54, 71–82, 128, 131, Fig. 7; Ex. 2001 ¶¶ 129–131, 175–177, 231–236, 238–239). Third, Patent Owner argues "Petitioner fails to articulate sufficient motivation to combine and modify the prior art." *Id.* at 57–58 (emphasis omitted).

We start with Patent Owner's first argument that "Spivey does not disclose a 'websocket connection' or channel between its message queue server and client devices"; "[r]ather, Spivey discloses a websocket connection between a live data access server and client devices," which Petitioner omitted without sufficient explanation. *Id.* at 47–51 (citing, *inter alia*, Ex. 1017 ¶¶ 43, 51, 53, 57, 61, 74, Figs. 1, 4; Ex. 2001 ¶¶ 220–225, 227–229). Dr. Wicker testifies that a person of ordinary skill in the art "would have understood Spivey to disclose a direct connection between the client devices and MQSD" and that a person of ordinary skill in the art "would have used this implementation because reducing the amount of server transfers would reduce latency, which is Spivey's main purpose." Ex. 1001 ¶ 175 n.3.

In contrast, Dr. Rubin testifies

> Spivey does not, as Petitioner alleges, disclose a 'websocket connection' or channel between the message queue

> server (comprising the message queue server device and live data server device) and a viewer client device, nor would a POSITA have been motivated to modify the prior art teachings to achieve such a channel.

Ex. 2001 ¶ 219.

After weighing the testimony of Dr. Wicker and Dr. Rubin, based on the preliminary record, we find Dr. Wicker's testimony to be supported by the evidence of record and we, therefore, give Dr. Wicker's testimony more weight. Although we agree with Patent Owner and the testimony of Dr. Rubin to the extent that we find Spivey discloses live data access server 130 connected to client devices 110-1 through 110-a in certain embodiments (*see, e.g.*, Ex. 1017, Fig. 1), at this stage of the proceeding, we also find that Spivey teaches or at least suggests a direct connection between message queue server device 410 and client devices 110-1 through 110-a.

For example, based on the preliminary record, we find that Petitioner's arguments and Dr. Wicker's testimony are supported by Spivey's disclosure that message queue server device 410 "may be substantially similar" to message queue server device 310 (Ex. 1017 ¶ 54 (quoted at Pet. 59)) and "MQS communication component 308 [included in message queue server device 310] may . . . receive requests to subscribe to topics in a topic set 330, and may push data from topic queues 332-1, 332-*n to the subscribers of the topics corresponding to those topic queues*." *Id.* ¶ 46 (emphasis added) (cited at Pet. 29 n.7). Spivey also discloses that message queue server device 410 "may be implemented as a RABBITMQ[ ] server," which is an "open source message broker software." *Id.* ¶ 58.[10]

[10] Paragraph 58 describes message queue server device 410 shown in Figure 4, which is relied on in the Petition. *See, e.g.*, Pet. 21–22, 27–28.

Spivey describes in that embodiment, topic queues in message queue server device 410 "push the messages *to clients that have subscribed to the topic queues*." *Id.* (emphasis added).

Spivey discloses that its message queue server "may comprise one or more electronic devices capable of receiving, processing, and sending information *for the system 100*." *Id.* ¶ 35 (emphasis added) (cited in Pet. 20, 34). Spivey further describes that message queue server 120 processes "live data to provide live data quickly *to the client devices 110-1 through 110-a*." *Id.* ¶ 36 (cited in Pet. 29 n.7). Spivey also discloses clients and servers communicating information with each other over, "a packet-switched network (e.g., public networks such as the Internet)." *Id.* ¶ 178 (cited in Pet. 41).

Based on the preliminary record, we also find that Petitioner's arguments and Dr. Wicker's testimony that live data access server 130 is optional are supported by Spivey. For example, Spivey discloses that "system 100 *may* include a live data access server 130." *Id.* ¶ 38 (emphasis added) (cited in Pet. 29 n.7). Live data access server is described as "a public interface." *Id.* Furthermore, based on the preliminary record, we find that Spivey's disclosure that "[i]n some embodiments," message queue server is not accessible to clients "directly" because it is, for example, "behind a firewall" sufficiently supports that Spivey teaches or at least suggests that the firewall is optional. *Id.* ¶ 36 (cited in Pet. 29 n.7).

Regarding Patent Owner's argument that "it is unclear how Spivey's message queue server device 410 could include the claimed event socket" (Prelim. Resp. 50–51), we find, based on the preliminary record, that Petitioner's argument and Dr. Wicker's testimony are supported by Spivey's

disclosure of user interface 900 presented by live data app 210 residing on client device 200 that "allow[s] an operator 108 of a client device 110 to view and select topics of live data to subscribe to," which may comprise, for example, "the topics available from a message queue server." Ex. 1017 ¶ 84, Figs. 2, 9.

We also disagree with Patent Owner's argument that Spivey's live data access server was "omitted" without sufficient explanation. Prelim. Resp. 48. Dr. Wicker testifies in his opinion a person of ordinary skill in the art "would have used this implementation [the implementation of system 100 with a direct connection between client devices and MQSD] because reducing the amount of server transfers would reduce latency, which is Spivey's main purpose." Ex. 1001 ¶ 175 n.3. We find this explanation sufficient for purposes of institution.

We next turn to Patent Owner's second argument that "Petitioner fails to show that Spivey's topic queues are '*event sockets*' under Petitioner's (and its [declarant's]) implied definition, which requires them to be 'uniquely addressable communication endpoints.'" Prelim. Resp. 51–57 (citing Ex. 1017 ¶¶ 38–39, 46–54, 71–82, 128, 131, Fig. 7; Ex. 2001 ¶¶ 129–131, 175–177, 231–236, 238–239). As discussed above with respect to claim construction (§ IV.C.1), Petitioner argues that "a POSA would have understood a 'socket' to be a uniquely addressable communication endpoint on a server where first event information is provided to a VCD." Pet. 26 (citing Ex. 1001 ¶ 170). Patent Owner states with respect to the term "event socket" that it "applies Petitioner's implied construction." Prelim. Resp. 8. At this stage of the proceeding, therefore, Petitioner's proposed construction

of "event socket" (Pet. 26) is not disputed by Patent Owner (Prelim. Resp. 8) and we use that construction in our analysis.

Patent Owner argues that a person of ordinary skill in the art "would have understood that Spivey's 'topic queue' is merely an organization of data, such as a database table, that includes information about a particular topic" and that "Spivey nowhere discloses or suggests that the topic queues are 'uniquely addressable' or 'communication endpoints.'" Prelim. Resp. 52 (citing, e.g., Ex. 2001 ¶¶ 231–236). Dr. Rubin testifies that a person of ordinary skill in the art "would not consider such a database, message queue, or any other internal data structure by themselves to be a 'uniquely addressable communication endpoint[]' because, as disclosed in Spivey, the queues themselves lack an address through which they can communicate at all." Ex. 2001 ¶ 232. Dr. Rubin also testifies that "[t]he only potential 'communication endpoint' Spivey discloses as being 'uniquely addressable' is the live data access server." *Id.* ¶ 233.

Dr. Wicker testifies as follows:

> Topic queues have a corresponding "topic label" which is used to identify a topic queue. *Id.* ¶49. "A topic label may be, for example" a "text string such as gamecenter.nfl.ravenssteelers." *Id.* ¶66.
>
> Client devices use these topic label text strings to connect and subscribe to MQSD's topic queues. First, client devices "request a live data connection" with the MQSD by "select[ing] or enter[ing] the address or connection information to a particular" MQSD. *See id.* ¶¶81-82. This "address may resemble a uniform resource locator (URL)." *Id.* ¶82. Second, as shown in Figure 9, client devices can use the topic labels to select "the topics available from [the MQSD] in a topic selection list" and "subscribe to" those topic queues . . . . *Id.* ¶¶83-84, Fig. 9.

Ex. 1001 ¶¶ 171–172.

Based on the preliminary record, we find that Petitioner's arguments and Dr. Wicker's testimony are supported by Spivey's disclosures that an "address may resemble a uniform resource locator (URL)" and that user interface 900 "allow[s] an operator 108 of a client device 110 to view and select . . . topics available from a message queue server." Ex. 1017 ¶¶ 82, 84, Fig. 9. Based on the preliminary record, we find that Dr. Rubin's testimony is limited to addressing live data access server 130 and does not address sufficiently Spivey's teachings as a whole understood from the perspective of an ordinarily skilled artisan. *See Sundance*, 550 F.3d at 1361 n.3 ("What a prior art reference discloses or teaches is determined from the perspective of one of ordinary skill in the art."); *Hedges*, 783 F.2d at 1041 (noting that when evaluating claims for obviousness, "the prior art as a whole must be considered"). We, therefore, give Dr. Rubin's testimony less weight than Dr. Wicker's testimony at this preliminary stage.

We now turn to Patent Owner's third argument that "Petitioner fails to articulate sufficient motivation to combine and modify the prior art." *Id.* at 57–58 (emphasis omitted). Patent Owner repeats its arguments that we address above with respect to Petitioner's reasoning to combine. *Compare* Prelim. Resp. 57–58, *with id.* at 36–47. For the reasons discussed above, we find based on the preliminary record before us that Patent Owner's arguments do not undermine Petitioner's showing. *See* § IV.E.1.a.

In summary, with respect to limitation 12.1, after consideration of the arguments and evidence of both parties, we find that Petitioner's contentions are supported by the cited portions of Ellis and Spivey and that Patent Owner's arguments do not undermine Petitioner's showing. Based on the record at this preliminary stage, therefore, we find that Petitioner has shown

sufficiently that the combination of Ellis and Spivey teaches limitation 12.1 for purposes of institution. Also, we find that Petitioner provides sufficient rationale to combine the teachings of Ellis and Spivey for purposes of institution. *See* § IV.E.1.a.

> *e) Limitations 12.2 and 12.3 – "B) transmitting at least one instruction to the first client device to cause the first client device to request a first copy of a first stream of digital content relating to the first sporting event and receive the first copy via a first video communication channel between at least one media source and the first client device, wherein the first video communication channel is different than the first event information communication channel"*

Petitioner argues that the combination of Ellis and Spivey teaches limitation 12.2. Pet. 28–30 & n.7 (citing, *inter alia*, Ex. 1016 ¶¶ 44, 51–52; Ex. 1001 ¶ 176). Petitioner additionally argues that the "wherein" portion (limitation 12.3) is taught by Ellis in the Ellis/Spivey combination. Pet. 30–31 (citing Ex. 1016 ¶¶ 39–41, Fig. 1; Ex. 1001 ¶ 177.

Petitioner asserts that Ellis discloses transmitting an interactive sports watcher application that includes instructions that are executed by the client device. Pet. 29–30 (citing Ex. 1016 ¶¶ 44, 51–52; Ex. 1001 ¶ 176). Petitioner asserts that this necessarily requires the transmission of instructions to the client device at the outset of a connection. *Id.* at 30. With respect to limitation 12.3, Petitioner argues that Ellis discloses two different communications paths to the user equipment, including broadcast programming over a first path and sports scores and game summary information over a second path. *Id.* at 30–31 (citing Ex. 1006 ¶¶ 39–41, Fig. 1; Ex. 1001 ¶ 177).

Ellis discloses its sports watcher application may be transmitted to user equipment, and that the instructions of sports watcher applications are used in control circuitry 110, which controls tuners, encoders and decoders, and input/output circuitry. Ex. 1006 ¶ 44. Additionally, Ellis discloses two communications paths, one for broadcast programming and one for real-time sports scores and game summary information. *Id.* ¶ 41, Fig. 1.

Other than arguments addressed above, Patent Owner presents no additional arguments with respect to these limitations. Petitioner's contentions are supported by the cited portions of Ellis. On this preliminary record, we find that Petitioner has shown sufficiently for purposes of institution that Ellis and Spivey teaches or suggests limitations 12.2 and 12.3 of claim 12.

f) Conclusion – Claim 12

After consideration of the arguments and the evidence of record, we determine that Petitioner has shown sufficiently, for purposes of institution, that the combination of Ellis and Spivey teaches or suggests all recitations in claim 12. Also, we find that Petitioner provides sufficient rationale to combine the teachings of Ellis and Spivey for purposes of institution. *See* § IV.E.1.a.

Based on the record at this preliminary stage, we conclude that Petitioner has demonstrated a reasonable likelihood that it would prevail in showing that claim 12 is unpatentable under 35 U.S.C. § 103 as obvious over Ellis and Spivey.

2. Dependent Claims 13–15 – Obviousness over Ellis and Spivey (Ground 1A)

Claims 13–15 depend from claim 12, either directly or indirectly. Petitioner provides a detailed analysis in support of its position that the combination of Ellis and Spivey teaches or suggests the limitations in dependent claims 13–15. Pet. 31–34.

We have reviewed Petitioner's assertions and the evidence in support thereof. Patent Owner does not separately challenge Petitioner's analysis for the dependent claims. Based on the record at this preliminary stage, we conclude that Petitioner has demonstrated a reasonable likelihood that it would prevail in showing that claims 13–15 are unpatentable under 35 U.S.C. § 103 as obvious over Ellis and Spivey.

F. Asserted Obviousness over Ellis, Spivey, and Herzog (Ground 1B)

Petitioner asserts that claims 1–11 are unpatentable as obvious over Ellis, Spivey, and Herzog. Pet. 34–50. Petitioner provides a detailed analysis in support of its position that the combination of Ellis, Spivey, and Herzog teaches or suggests the limitations in claims 1–11. *Id.* Many of these repeat contentions discussed above, with respect to limitations of claim 12, in addition, Petitioner relies on some contentions with respect to Herzog that are substantially similar to contentions relating to the obviousness of claim 1 over Herzog and Spivey (Ground 2A), as summarized below.

We have reviewed Petitioner's assertions and the evidence in support thereof. Patent Owner relies on the same arguments discussed above in with respect to claim 12. Prelim. Resp. 60. Based on the record at this preliminary stage, we conclude that Petitioner has demonstrated a reasonable

likelihood that it would prevail in showing that claims 1–11 are unpatentable under 35 U.S.C. § 103 as obvious over Ellis, Spivey, and Herzog.

G. Asserted Obviousness over Herzog and Spivey (Ground 2A)

Petitioner asserts that claims 1–9 and 12–14 are unpatentable as obvious over Herzog and Spivey. Pet. 50–85. Patent Owner disputes Petitioner's showing. Prelim. Resp. 60–72.

1. Independent Claim 1 – Obviousness over Herzog and Spivey (Ground 2A)

a) Motivation to Combine

Petitioner proposes a modification of Herzog in which Spivey's MSQD is incorporated into Herzog's origin server. Pet. 52.

Petitioner makes arguments in support of its position that a person of ordinary skill in the art would have combined Herzog and Spivey, which are very similar to Petitioner's arguments made in support of its proposed combination of Ellis and Spivey. *Compare* Pet. 50–65, *with id.* at 19–24; *id.* at 53 ("A POSA would have been motivated to combine Herzog with Spivey for many of the same reasons that a POSA would have been motivated to combine Ellis with Spivey."). For example, Petitioner argues that its proposed combination would have improved latency issues in Herzog's system. *Id.* at 53. Petitioner also argues that Herzog and Spivey relate to the same subject matter, the references solve the same or similar problems, and Spivey provides a complementary solution to Herzog. *Id.* at 53–55. Petitioner argues that a person of ordinary skill in the art would have had a reasonable expectation of success for the same reasons. *Id.* at 54.

Patent Owner makes three arguments in support of its position that Petitioner has not shown that a person of ordinary skill in the art would have

made Petitioner's proposed combination. Prelim. Resp. 61–70. First, Patent Owner argues that Petitioner's proposed combination is inoperable and departs from the express teachings of Herzog. *Id.* at 61–64. Second, Patent Owner argues Petitioner's reasons do not "withstand scrutiny" in part because of differences in the reference teachings and because Petitioner does not show a person of ordinary skill in the art would have had a reasonable expectation of success. *Id.* at 64–67. Third, Patent Owner argues Petitioner relies on impermissible hindsight bias to "reconstruct the invention." *Id.* at 67–70.

We start with Petitioner's argument that its proposed combination would have been made to improve latency issues in Herzog's system. Pet. 52–54. Petitioner's argument is supported by the same disclosures in Spivey that were discussed with respect to Ground 1A. Patent Owner argues that Petitioner's proposed combination is inoperable and departs from the express teachings of Herzog because Herzog "needs the projected latency period to perform synchronization between audio/video data and the meta-data." Prelim. Resp. 63–64 (citing Ex. 1015 ¶¶ 74, 82; Ex. 2001 ¶¶ 277–281). Herzog describes that "live MPEG encoders may reach a latency that is greater than 32 seconds," "total latency in the video/audio data stream may be greater than 63 seconds," and "[t]he metadata, on the other hand, includes a latency that is less than a total of 2 seconds." Ex. 1015 ¶ 82.

Regarding Patent Owner's argument that Petitioner's proposed combination is inoperable, based on the record before us, we find that Petitioner has shown sufficiently that its proposed combination is operable. Petitioner's proposed combination incorporates Spivey's technology that improves latency. *See, e.g.*, Ex. 1017 ¶¶ 27–28 (cited at Pet. 53). Patent

Owner's argument and Dr. Rubin's supporting testimony are based on improved latency causing inoperability, but Herzog teaches compensating for different types of data having different latencies. Ex. 1015 ¶ 82. Even to the extent that the resulting combination would have required processing a faster meta-data stream, it is well-settled that a preferred combination or device is not required. *See, e.g., Novartis Pharm. Corp. v. West-Ward Pharm. Int'l Ltd.*, 923 F.3d 1051, 1059 (Fed. Cir. 2019) ("[O]ur case law does not require that a particular combination must be the preferred, or the most desirable, combination described in the prior art in order to provide motivation for the current invention."); *PAR Pharm., Inc. v. TWI Pharms., Inc.*, 773 F.3d 1186, 1197–98 (Fed. Cir. 2014) (holding that it is not necessary to show that a combination is "the best option, only that it be a *suitable* option"). Additionally, claim 1 requires only "first event information germane to a first live sporting event" and, preliminarily and on the present record, does not require that the first event information must be synchronized with the first live sporting event.

Relying on the testimony of Dr. Rubin, Patent Owner also argues that Petitioner's argument does not withstand scrutiny because "faster Herzog data . . . would not solve any video latency problem in Herzog because Herzog does not have a latency problem." Prelim. Resp. 65 (citing, e.g., Ex. 2001 ¶¶ 283–285). Petitioner's argument and Dr. Wicker's testimony rely on Spivey's disclosures to support Petitioner's argument that Herzog has latency issues. Pet. 53; Ex. 1001 ¶ 127 (citing Ex. 1017 ¶¶ 27–28). Spivey describes that "[a]s technology allows users to receive such data away from desktop computers, the demand for live event data *in real time* on mobile devices has increased." Ex. 1017 ¶ 2 (emphasis added). Spivey

describes that its technology reduces delay, "providing *a significant advantage over the conventional practices*." *Id.* ¶ 28 (emphasis added). On the present record, and for the purposes of institution, we find that Petitioner's argument of motivation to achieve reduced latency is supported sufficiently for purposes of institution based on Spivey's disclosure of user "demand" for "live event data in real time" and that Spivey's technology would have been understood to provide "*a significant advantage over the conventional practices*." *Id.* ¶¶ 2, 28 (emphasis added).

Additionally, on the present record, upon consideration of Petitioner's argument and Dr. Wicker's testimony, as well as Patent Owner's argument and Dr. Rubin's testimony, we find Petitioner has the better argument based on the preliminary record. We do not agree with Patent Owner's argument and Dr. Rubin's testimony that an alleged need to synchronize meta-data would undermine Petitioner's proposed combination. Herzog teaches synchronizing a faster meta-data stream. Ex. 1015 ¶ 82. Also, claim 1 does not recite expressly that the first event information must be synchronized with the first live sporting event.

Patent Owner's arguments and Dr. Rubin's testimony that Petitioner's reasons to combine Herzog and Spivey do not "withstand scrutiny" in part because of differences in the reference teachings (Prelim. Resp. 64–67) rely on characterizations of the references that appear to be contradicted by the reference teachings at this stage of the proceeding. Like Ellis and Spivey, Herzog provides content delivery for real-time events quickly to multiple users over the Internet. *See, e.g.*, Ex. 1015 ¶ 49 (describing publishing "video imagery, related audio and meta-data that are received from the content provider 42 onto the content delivery network 47 for presentation to

users/consumers of the content via mobile devices such as device 45"), ¶ 51 (describing that an "Internet server provider (ISP)" may transfer data to local content delivery network 47), Figs. 1, 4, 7. Patent Owner's arguments and Dr. Rubin's testimony do not take into account the teachings of the references as a whole, from the perspective of an ordinarily skilled artisan. *See Sundance*, 550 F.3d at 1361 n.3; *Hedges*, 783 F.2d at 1041.

Patent Owner's arguments that Petitioner relies on impermissible hindsight bias to "reconstruct the invention" (Prelim. Resp. 67–70) and Dr. Rubin's related testimony rely on an incorrect characterization of the Petition and the evidence in the preliminary record. As discussed above, Petitioner's arguments that a person of ordinary skill in the art would have made its proposed combination are sufficient for purposes of institution.

We find based on the preliminary record before us that Petitioner provides sufficient rationale to combine the teachings of Herzog and Spivey for purposes of institution. We also find that Petitioner has shown sufficiently for purposes of institution that a person of ordinary skill in the art would have had a reasonable expectation of success.

b) Objective Indicia of Non-Obviousness

Additionally, we do not accord substantial weight to Patent Owner's arguments relating to objective indicia of non-obviousness for the same reasons given with respect to Ground 1A. *See* § IV.E.1.b.

c) Element-By-Element Analysis

For the preamble of claim 1, Petitioner contends that Herzog's system provides video/audio streams, e.g., of a car race, to user devices over a communication network, along with "meta-data" regarding information

germane to the car race. Pet. 55–56 (citing Ex. 1015, code (57), ¶¶ 19, 45, 51, 70; Ex. 1001 ¶¶ 266–267).

For the control server of limitation 1.1, Petitioner contends that Herzog's ERP server retrieves information from the ERP generator server that generates meta-data. *Id.* at 57–58 (citing Ex. 1015 ¶¶ 13, 16, 17, 45, 47, 50, 85–86, Figs. 4, 8; Ex. 1001 ¶¶ 268–269).

For limitation 1.2.1, reciting a socket server communicatively coupled to the control server, which receives the first event information from the control server, Petitioner asserts that its proposed incorporation of Spivey's MSQD into Herzog's origin server teaches or suggests a socket server communicatively coupled to the control server, which would receive the meta-data from Herzog's ERP server. Pet. 58–62 (citing, *inter alia*, Ex. 1015 ¶¶ 48–52, Figs. 4, 6; Ex. 1017 ¶¶ 35, 36, 47, 52, 53, 55, Figs. 3, 4; Ex. 1001 ¶¶ 270–273). With respect to limitations 1.2.2 and 1.2.3, Petitioner argues that in its proposed combination, the combined system of Herzog and Spivey would have transmitted the first event information to client devices via the topic queues, when users access the topic queues in the MQSD using topic labels or Event IDs associated with a topic queue. *Id.* at 62–65 (citing, *inter alia*, Ex. 1015 ¶ 51; Ex. 1017, code (57), ¶¶ 35, 43, 47–51, 81–82, 179; Ex. 1001 ¶¶ 274–277). Petitioner argues that the webserver of limitation 1.3.1 is taught in Herzog's application server, which facilitates streaming between the origin server and client device after receiving a request from the client device, upon which it prompts the origin server to transmit the meta-data stream to a client device, using a protocol that would require an IP address to designate the location from which the client device would receive the content. *Id.* at 65–67 (citing, *inter alia*, Ex. 1015 ¶¶ 35, 51, 58, Fig 4.;

Ex. 1001 ¶¶ 278–279). Lastly, Petitioner contends that limitation 1.3.2 is taught by the URL and topic label or Event ID associated with and used to access Spivey's MQSD. *Id.* at 67–68 (citing Ex. 1017 ¶¶ 81–82, 179; Ex. 1001 ¶ 280).

In addition to Patent Owner's motivation to combine arguments, addressed above, Patent Owner asserts the same arguments regarding Spivey's "event socket" addressed with respect to Ground 1A. Prelim. Resp. 70. Additionally, Patent Owner argues that Herzog's meta-data does not teach or suggest "online gaming information." *Id.* at 70–72. However, on the present record and for the purposes of institution, telemetry data relating to the performance of cars and drivers in a race is encompassed in "online gaming information" under Patent Owner's definition (*see* Pet. 56 – 58; Ex. 1001 ¶¶ 267–268; Ex. 1015 ¶ 45 ("parameters regarding the status of each car and driver in the race").

We determine, on the present record, that Petitioner's contentions as summarized above sufficiently show that each element of claim 1 is taught or suggested by Petitioner's proposed combination of Herzog and Spivey, in which Spivey's MSQD is incorporated into Herzog's origin server.

d) Conclusion—Claim 1 (Ground 2A)

After consideration of the arguments and the evidence of record, we determine that Petitioner has shown sufficiently, for purposes of institution, that the combination of Herzog and Spivey teaches or suggests all recitations in claim 1, and that Petitioner provides sufficient rationale to combine the teachings of Herzog and Spivey.

Based on the record at this preliminary stage, we conclude that Petitioner has demonstrated a reasonable likelihood that it would prevail in

showing that claim 1 is unpatentable under 35 U.S.C. § 103 as obvious over Herzog and Spivey.

2. Independent Claim 12 and Dependent Claims 2–9, 13, and 14 – Obviousness over Herzog and Spivey (Ground 2A)

Petitioner asserts that independent claim 12 is unpatentable over Herzog and Spivey and includes largely the same reasoning as provided with respect to claim 1. Pet. 73–76. Additionally, Petitioner asserts that claims 2–9, 13, and 14 are unpatentable as obvious over Herzog and Spivey, and provides a detailed analysis in support of its position that the combination of Herzog and Spivey teaches or suggests the limitations in these dependent claims. Pet. 68–73, 76–77.

We have reviewed Petitioner's assertions and the evidence in support thereof. Patent Owner relies on the same arguments discussed above in Section IV.G.1 with respect to claim 1. Prelim. Resp. 60–73. Based on the record at this preliminary stage, we conclude that Petitioner has demonstrated a reasonable likelihood that it would prevail in showing that claims 1–9, 13, and 14 are unpatentable under 35 U.S.C. § 103 as obvious over Herzog and Spivey.

H. Asserted Obviousness over Herzog, Spivey, and Ellis (Ground 2B)

Petitioner asserts that claims 10, 11, and 15 are unpatentable as obvious over Herzog, Spivey, and Ellis. Pet. 77–82. Petitioner provides a detailed analysis in support of its position that the combination Herzog, Spivey, and Ellis teaches or suggests the limitations in dependent claims 10, 11, and 15. *Id.*

We have reviewed Petitioner's assertions and the evidence in support thereof. Patent Owner relies on the same arguments discussed above in with respect to Ground 2A. Prelim. Resp. 73.

Based on the record at this preliminary stage, we conclude that Petitioner has demonstrated a reasonable likelihood that it would prevail in showing that claims 10, 11, and 15 are unpatentable under 35 U.S.C. § 103 as obvious over Herzog, Spivey, and Ellis.

V. CONCLUSION

For the foregoing reasons, we determine that Petitioner has demonstrated that there is a reasonable likelihood that it would prevail in proving the unpatentability of at least one of the challenged claims of the '218 patent. We thus institute an *inter partes* review of all of the challenged claims of the '218 patent on all grounds asserted in the Petition. *See* 37 C.F.R. § 42.108(a).

Any findings or conclusions in this Decision are made only for the purposes of institution and are not dispositive of any issue. We have not made a final determination with respect to the patentability of any challenged claim. Our final determination will be based on the record as fully developed during trial, including any evidence or argument timely presented by the parties under our Rules.

VI. ORDER

In consideration of the foregoing, it is hereby:

ORDERED that *inter partes* review of claims 1–15 of the '218 patent is hereby instituted on all grounds stated in the Petition; and

FURTHER ORDERED that pursuant to 35 U.S.C. § 314(c) and 37 C.F.R. § 42.4, notice is hereby given of the institution of a trial; the trial will commence on the entry date of this decision.

For PETITIONER:

W. Todd Baker
Michael Dinnella
KIRKLAND & ELLIS LLP
todd.baker@kirkland.com
mtd5145@gmail.com

For PATENT OWNER:

Brian Eutermoser
Mikaela Stone
KING & SPALDING LLP
beutermoser@kslaw.com
mikaela.stone@kslaw.com

Trials@uspto.gov
571-272-7822

Paper 10
Date: March 17, 2025

UNITED STATES PATENT AND TRADEMARK OFFICE

BEFORE THE PATENT TRIAL AND APPEAL BOARD

GENIUS SPORTS LTD.,
Petitioner,

v.

SPORTSCASTR INC. d/b/a PANDA INTERACTIVE,
Patent Owner.

IPR2024-01310
Patent 11,039,218 B1

Before BARBARA A. PARVIS, JOHN A. HUDALLA, and SHARON FENICK, *Administrative Patent Judges*.

FENICK, *Administrative Patent Judge*.

DECISION
Granting Institution of *Inter Partes* Review
35 U.S.C. § 314

I. INTRODUCTION

Genius Sports Ltd. ("Petitioner") filed a Petition (Paper 1 ("Pet.")) requesting *inter partes* review of claims 1–15 ("challenged claims") of U.S. Patent No. 11,039,218 B1 (Ex. 1009, "the '218 patent"). SportsCastr Inc. (d/b/a PANDA Interactive) ("Patent Owner") filed a Preliminary Response. Paper 7 ("Prelim. Resp."). After authorization (Ex. 1060), Petitioner filed a Preliminary Reply (Paper 8, "Prelim. Reply) and Patent Owner a Preliminary Sur-reply (Paper 9, "Prelim. Sur-reply") relating to discretionary denial issues.

We have authority to determine whether to institute review under 35 U.S.C. § 314 and 37 C.F.R. § 42.4. We may institute an *inter partes* review if "the information presented in the petition . . . and any response . . . shows that there is a reasonable likelihood that the petitioner would prevail with respect to at least 1 of the claims challenged in the petition." 35 U.S.C. § 314.

Upon consideration of the contentions and the evidence of record at this preliminary stage, we determine that Petitioner has demonstrated a reasonable likelihood of prevailing on at least one of the challenged claims of the '218 patent. Accordingly, we grant Petitioner's request and institute an *inter partes* review of all challenged claims of the '218 patent and with respect to all grounds set forth in the Petition.

II. BACKGROUND

A. Real Parties-in-Interest

Petitioner identifies itself as the real party-in-interest. Pet. 3. Patent Owner names itself as the real party-in-interest. Paper 4 (Patent Owner's Mandatory Notices), 1.

B. Related Matters

Both parties identify, as a matter currently involving the ’218 patent, *SportsCastr Inc. v. Genius Sports Ltd.*, No. 2:23-cv-00471 (E.D. Tex.) (“related parallel proceeding”). Pet. 3; Paper 4, 1. Patent Owner also identifies *SportsCastr Inc. v. Sportradar Group, AG et al*., 2:23-cv-00472 (E.D. Tex.) as a matter involving the ’218 patent. Paper 4, 1.

The parties also identify that Petitioner filed a second petition challenging the ’218 patent in IPR2024-01311. Pet. 3–4; Paper 4, 1. Petitioner filed a document that ranks the petitions in the instant case and IPR2024-01311 and provides an explanation of the material differences between the petitions. *See* Paper 3 (Petitioner’s Reasons for Parallel Petitions and Petition Ranking). Petitioner ranks the instant Petition first, therefore we consider the merits of the instant petition.

Petitioner further identifies four other petitions challenging patents related to the ’218 patent in IPR2024-01305, IPR2024-01307, IPR2024-01308, and IPR2024-01309. Pet. 3–4.

C. The ’218 Patent

The ’218 patent is titled “Systems, Apparatus and Methods for Rendering Digital Content Relating to a Sporting Event with Online Gaming Information.” Ex. 1009, code (54). The ’218 patent relates to allowing low-latency viewing of broadcast digital content streams of live events, and synchronization of event information with viewed streams. *Id.* at 13:17–21. Figure 1A of the ’218 patent is reproduced below.

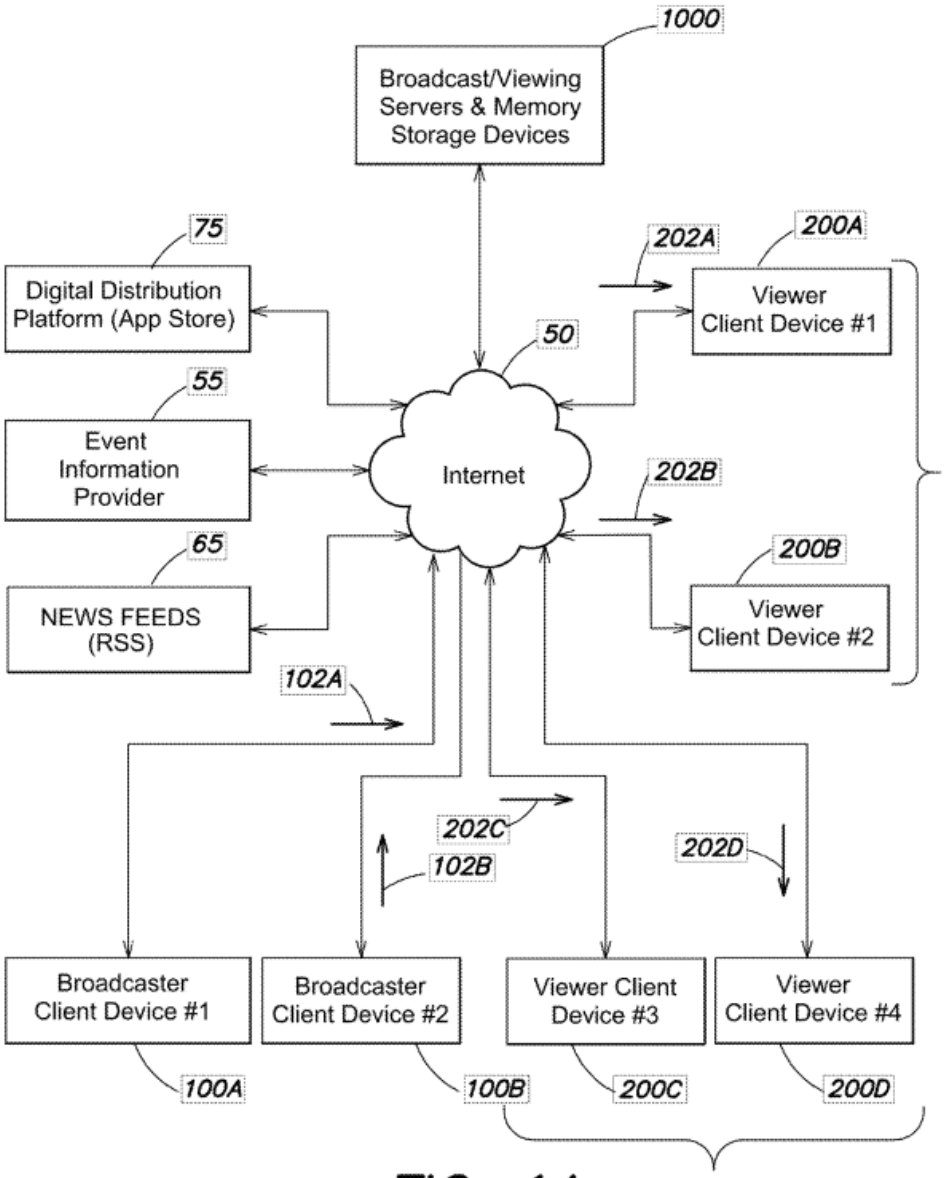

FIG. 1A

Figure 1A is a block diagram of a system to facilitate live streaming of digital content from multiple broadcasters to multiple viewers. *Id.* at 11:29–32.

The system shown in Figure 1A includes broadcaster client devices 100A and 100B, viewer client devices 200A–200D, broadcast/viewing servers and memory storage devices 1000, event information provider 55, one or more news feeds 65, and digital distribution platform 75, all coupled

together via Internet 50. *Id.* at 14:61–15:2. In Figure 1A, first broadcaster client device 100A provides first live stream of digital content 102A, and copies 202A and 202B of digital content 102A are received by viewer client devices 200A and 200B, respectively. *Id.* at 15:32–37. Similarly, second broadcaster client device 100B provides second live stream of digital content 102B, and copies 202C and 202D are received by viewer client devices 200C and 200D, respectively. *Id.* at 15:37–42. Broadcast/viewing servers and memory storage devices 1000 may retrieve news and/or event information germane to a live stream of digital content from news feeds 65 and event information provider 55 and convey the relevant news and/or event information to one or more client devices. *Id.* at 15:42–49.

Figure 2, reproduced below, is a block diagram of broadcast/viewing servers and memory storage devices 1000 in the system of Figure 1A. *Id.* at 11:36–38, 18:40–53.

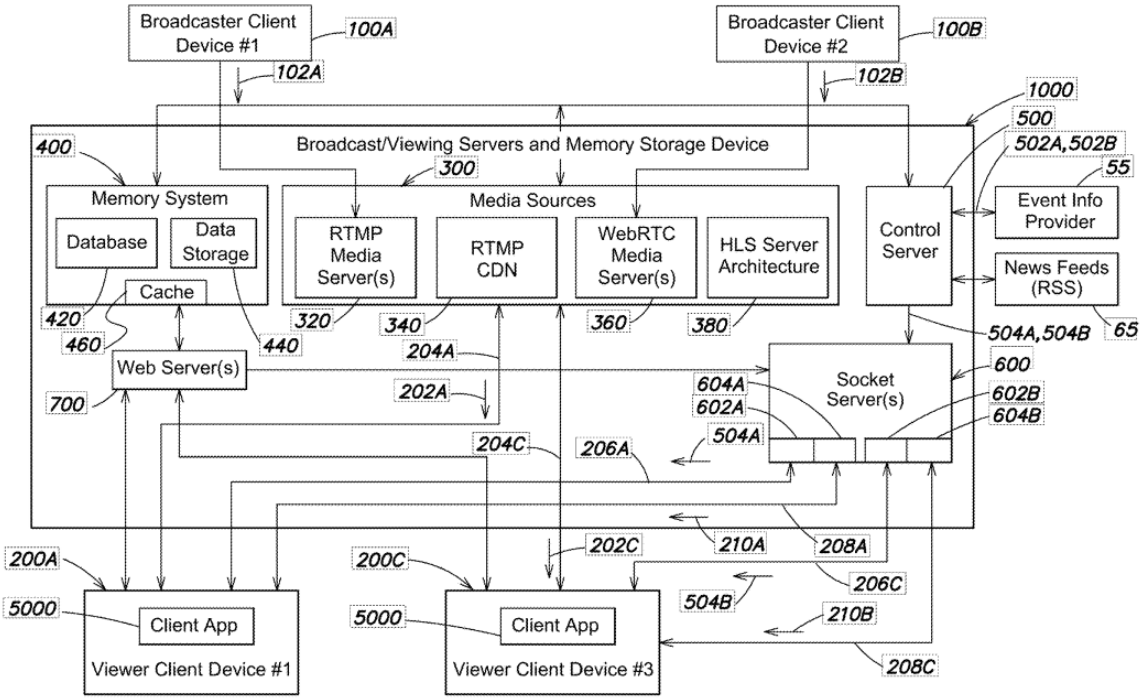

FIG. 2

Figure 2 is a block diagram of servers/memory storage devices 1000. *Id.* at 11:36–38, 18:40–53.

Figure 2 shows servers/memory storage devices 1000 including, in relevant part, a plurality of media sources 300, control server 500, one or more web servers 700, and socket server 600. *Id.* at 19:26–32, 19:57–60, 20:16–19. Media sources 300 receive live streams of digital content (102A, 102B) from broadcaster client devices (100A, 100B) and provide copies (202A, 202C) to viewer client devices (200A, 200C). *Id.* at 19:26–32, 21:14–40. Web server 700 supports an application programming interface to facilitate communication between servers/memory storage devices 1000 and client devices. *Id.* at 18:64–19:6. Control server 500 retrieves news and/or event information germane to the live streams of digital content (102A, 202C) from news feeds 65 and event information provider 55. *Id.* at 19:57–64. Socket servers 600 facilitate communication of synchronized event information retrieved by control server 500 to broadcaster and viewer client devices. *Id.* at 20:16–36. For example, control server 500 may retrieve first score information 504A for a first live sporting event and provide it to socket server 600, which establishes event socket 602A. *Id.* at 21:56–22:4. First viewer client device 200A connects to event socket 602A via a URL, and first score information 504A is transmitted to first viewer client device 200A. *Id.*

D. Illustrative Claims

Petitioner challenges claims 1–15 of the ’218 patent. Pet. 6. Claims 1 and 12 are independent, claims 2–11 depend, directly or indirectly, from claim 1, and claims 13–15 depend directly from claim 12. Ex. 1009, 57:35–

60:34. Independent claims 1 and 12, reproduced below, are illustrative of the claimed subject matter.

> 1. [1.0[1]] A system for controlling a plurality of viewer client devices to receive first digital content relating to a first sporting event and first event information germane to the first sporting event, the first event information including online gaming information, the system comprising:
>
> [1.1] A) a control server to periodically retrieve, via the Internet, the first event information germane to the first sporting event;
>
> [1.2.1] B) at least one socket server communicatively coupled to the control server to:
>
> receive from the control server at least the first event information; and
>
> [1.2.2] transmit at least some of the first event information, including the online gaming information, to at least a first viewer client device of the plurality of viewer client devices via a first event information Internet communication channel between a first event socket of the at least one socket server and the first viewer client device, [1.2.3] wherein the first event socket corresponds to the first event information germane to the first sporting event; and
>
> [1.3.1] C) at least one webserver communicatively coupled to the at least one socket server to transmit, to the first viewer client device:
>
> a first Internet address of a first media source to establish a first video Internet communication channel between the first media source and the first viewer client device to carry the first digital content relating to the first sporting event; and

[1] Herein we use Petitioner's designations for the elements of claim 1. Pet. 38–41, 55–68; Ex. 1010, 1.

> [1.3.2] a first socket address of the first event socket to establish the first event information Internet communication channel to carry the online gaming information.

Id. at 57:35–67.

> 12. [12.0[2]] A method for providing, to a first client device, first event information germane to a first sporting event, wherein the first event information includes first online gaming information relating to the first sporting event, the method comprising:
>
> [12.1] A) transmitting the first online gaming information to at least the first client device via a first event information communication channel between a first event socket of at least one socket server and the first client device, wherein the first event socket corresponds to the first event information germane to the first sporting event; and
>
> [12.2] B) transmitting at least one instruction to the first client device to cause the first client device to request a first copy of a first stream of digital content relating to the first sporting event and receive the first copy via a first video communication channel between at least one media source and the first client device, [12.3] wherein the first video communication channel is different than the first event information communication channel.

Id. at 59:43–62.

E. Evidence

Petitioner relies on the patent references summarized in the table below.

Name	Reference	Exhibit
Herzog	US 2015/0163379 A1, filed Dec. 11, 2013, published June 11, 2015	1015
Ellis	US 2014/0229992 A1, filed Apr. 22, 2014, published Aug. 14, 2014	1016

[2] Herein we use Petitioner's designations for the elements of claim 12. Pet. 24–31, 73–76; Ex. 1010, 3–4.

Name	Reference	Exhibit
Spivey	US 2016/0036910 A1, filed Aug. 4, 2014, published Feb. 4, 2016	1017

Petitioner also relies on the Declaration of Stephen B. Wicker, Ph.D. (Ex. 1001) to support its contentions that the challenged claims are unpatentable. Patent Owner relies on the Declaration of Aviel Rubin, Ph.D. (Ex. 2001) in support of its contentions that Petitioner has not shown that the challenged claims are unpatentable.

F. Asserted Grounds

Petitioner asserts that the challenged claims of the ’218 patent are unpatentable based on the following grounds summarized in the table below (Pet. 6):

Claim(s) Challenged	35 U.S.C. §[3]	References/Basis	Ground name
12–15	103	Ellis, Spivey	1A
1–11	103	Ellis, Spivey, Herzog	1B
1–9, 12–14	103	Herzog, Spivey	2A
10, 11, 15	103	Herzog, Spivey, Ellis	2B

III. 35 U.S.C. § 325(d) ANALYSIS

Patent Owner argues that the Petition should be denied under 35 U.S.C. § 325(d) because the asserted references are the same as or cumulative of references previously considered by the Office. Prelim. Resp.

[3] The Leahy-Smith America Invents Act (“AIA”), Pub. L. No. 112-29, 125 Stat. 284 (2011), amended 35 U.S.C. § 103, effective March 16, 2013. Because the challenged claims of the ’218 patent have an apparent effective filing date after March 16, 2013, the AIA version of § 103 applies. Ex. 1009, codes (22), (60), (63). Our determinations and findings herein would not change if the pre-AIA provisions applied.

19–35; Prelim. Sur-Reply. Petitioner argues that discretionary denial under § 325(d) is not appropriate. Pet. 84–87; Prelim. Reply.

Under 35 U.S.C. § 325(d), the Board may exercise discretion to deny a petition that presents the same or substantially the same art or arguments as were previously presented to the Office. To evaluate arguments for discretionary denial under § 325(d), the Board uses a two-part framework:

> (1) whether the same or substantially the same art previously was presented to the Office or whether the same or substantially the same arguments previously were presented to the Office; and
>
> (2) if either condition of first part of the framework is satisfied, whether the petitioner has demonstrated that the Office erred in a manner material to the patentability of challenged claims. If a condition in the first part of the framework is satisfied and the petitioner fails to make a showing of material error, the Director generally will exercise discretion not to institute *inter partes* review.

Advanced Bionics, LLC v. MED-EL Elektromedizinische Geräte GmbH, IPR2019-01469, Paper 6 at 8–9 (PTAB Feb. 13, 2020) (precedential) ("*Advanced Bionics*").

The *Becton, Dickinson* factors provide useful insight into how to apply the *Advanced Bionics* framework under 35 U.S.C. § 325(d). *Id.* at 9 (referencing *Becton, Dickinson & Co. v. B. Braun Melsungen AG*, IPR2017-01586, Paper 8, 17–18 (PTAB Dec. 15, 2017) (precedential as to § III.C.5, first paragraph) ("*Becton, Dickinson*"). *Becton, Dickinson* factors (a), (b), and (d) help to determine whether that the same or substantially the same art or arguments were not presented to the Office. *Advanced Bionics*, 10. These factors are: (a) the similarities and material differences between the asserted art and the prior art involved during examination; (b) the cumulative nature of the asserted art and the prior art evaluated during examination; and

(d) the extent of the overlap between the arguments made during examination and the manner in which Petitioner relies on the prior art or Patent Owner distinguishes the prior art. *Becton, Dickinson*, 17–18.

A. Prosecution History

During the prosecution of the application that issued as the ’218 patent, an information disclosure statement (IDS) was submitted by the applicant that identified a PCT Search Report and Written Opinion in PCT/US2018/033016 (“PCT Search Report”). *See* Ex. 1011,[4] 178–185 (IDS), 204–231 (PCT Search Report).

In the PCT Search Report, US 2008/0062318 A1 (“Ellis-318, Ex. 2036”) is labeled as a document considered to be relevant, with a relevance marker “A,” identifying it as a “document defining the general state of the art which is not considered to be of particular relevance.” Ex. 1011, 207; Pet. 85; Prelim. Resp. 21. Petitioner and Patent Owner each state that the Ellis reference asserted in the Petition is a continuation application of Ellis-318. Pet. 5 n.4, 85; Prelim. Resp. 22; Prelim. Reply 1. We note that this does not appear to be the case, though the references are related insofar as each contains a claim of priority to the same two provisional applications. Ex. 1006, code (60); Ex. 2036, code (60). Patent Owner asserts that the two applications “share identical specifications and figures.” Prelim. Resp. 21–22; Prelim. Sur-reply 1; Ex. 1016; Ex. 2036 (Ellis-318).

[4] Ex. 1011 is a certified file history for Application 17/141,631, which issued as the ’218 patent. *See* Ex. 1009, code (21). Patent Owner submitted Ex. 2035, which appears to be identical; we cite to Ex. 1011 for consistency.

Additionally, during the prosecution of the application that issued as the ’218 patent, the Examiner[5] issued a non-final rejection indicating the allowability of the issued claims, while provisionally rejecting them on the basis of nonstatutory double patenting. Ex. 1011, 337–49. In this rejection, the Examiner’s discussion included three references: US 2001/0001160 A1 (“Shoff,” Ex. 2037), US 2001/0039209 A1 (“DeWeese,” Ex. 2038), and US 2011/0083144 A1 (“Bocharov,” Ex. 2039). *Id.* at 341–48. The Examiner characterized Bocharov as “disclos[ing the] concept of streaming program content to [a] user’s device.” *Id.* at 341, 344, 346. The Examiner characterized DeWeese as “disclos[ing the] concept of streaming horse race program content and betting information to [a] user’s device.” *Id.* at 342, 345, 347. The Examiner characterized Shoff as “disclos[ing the] concept of providing the program information and its supplemental information to the user via two interface[s].” *Id.* at 343, 345, 347. Additionally, Bocharov was cited in the PCT Search Report with a relevance marker “X,” meaning “document of particular relevance,” and its disclosures were discussed extensively with reference to the pending claims in the PCT application. *Id.* at 207–29.

B. Advanced Bionics

Under the first part of the *Advanced Bionics* framework, previously presented art includes art listed on an IDS and “art made of record by the Examiner.” *Advanced Bionics*, 7–8.

---

[5] Patent Owner makes certain arguments relating to the author of the PCT Search Report. *See*, *e.g.*, Prelim. Resp. 23 (referring to consideration “by the PCT Examiner”); Prelim. Sur-reply 1 (“***two*** examiners considered Ellis-318”). For clarity, we note that our reference to “the Examiner” refers to examination at the USPTO.

We focus only on issues relating to Spivey, which we find to be dispositive. As discussed more extensively below, Sections IV.D.2, IV.E.1.d and IV.G.c, Petitioner relies in each ground on teachings from Spivey regarding Spivey's message queue server device, topic queues, topic queue labels, and subscriptions by client devices to these queues, in combinations with Ellis for Ground 1A and with Herzog for Ground 2A, and with additional references for Grounds 1B and 2B. *See, e.g.*, Pet. 25–29, 58–65, 67–68 (citing Ex. 1017 ¶¶ 35, 36, 45–47, 49, 51–55, 66, 81–82, 96, 104, Figs. 3, 4, 9).

Patent Owner argues that because the PCT Search Report discussed Bocharov, the Examiner "considered the teaching in Bocharov regarding the use of servers to stream program content to user devices." Prelim. Resp. 32. "Specifically, Bocharov disclosed the use of multiple generic servers to facilitate communication." *Id.* (citing Ex. 2039 ¶ 17); *see id.* at 31–32. Additionally, Patent Owner argues that Bocharov discloses that "[s]treaming media is multimedia that is constantly received by, and normally presented to, an end-user (using a client) while it is being delivered by a streaming provider (using a server)." Prelim. Resp. 31–32 (citing Ex. 2039 ¶¶ 2, 31); Prelim. Sur-reply 4. Patent Owner contends that in considering Bocharov, "the Examiner has already considered the disclosure of 'control server' and 'socket server' in the prior art in allowing the '218 patent." Prelim. Resp. 31.

However, we do not agree that the disclosures of Bocharov discussed in the PCT Search Report or referred to by the Examiner contain similar disclosures to those relied upon from Spivey by Petitioner. While Patent Owner correctly notes (Prelim. Sur-reply 4) that Bocharov is discussed

extensively in the PCT Search Report, the PCT Search Report explicitly notes that Bocharov is not relied on for "event socket," "socket server," "event identifier," among other related material, but rather explicitly relies on a different reference when discussing these elements of the claims at issue in the PCT application at the time. *See, e.g.*, Ex. 1011, 212, 214, 223, 224. Regardless of whether Bocharov teaches "the use of servers to stream program content to user devices" (Prelim. Resp. 32) or similar generic disclosures, the specific disclosures of Spivey relied upon by Petitioner are, based on the present record, not present in Bocharov.

Thus, in considering *Becton Dickinson* factors (a), (b), and (d), we conclude that (a) there are material differences between the asserted art, specifically, Spivey, and the prior art involved during examination; (b) none of the referenced discussed by the parties are cumulative of the asserted art, and (d) to the extent Bocharov might teach or suggest certain elements of the challenged claims, there is no overlap between arguments considered during examination and the manner in which Petitioner relies on Spivey in this proceeding.

For these reasons, we determine that the same or substantially the same art as involved in this proceeding was not previously presented to the Office, and thus, we do not proceed to part two of an *Advanced Bionics* evaluation and we do not exercise our discretion to deny the Petition under § 325(d).

IV. ANALYSIS

A. Legal Standards

A patent claim is unpatentable as obvious if the differences between the claimed invention and the prior art are such that the claimed invention,

as a whole, would have been obvious before the effective filing date to a person having ordinary skill in the art. *KSR Int'l Co. v. Teleflex Inc.*, 550 U.S. 398, 406 (2007). The question of obviousness is resolved on the basis of underlying factual determinations including: (1) the scope and content of the prior art; (2) any differences between the claimed subject matter and the prior art; (3) the level of ordinary skill in the art; and (4) when in evidence, objective evidence of nonobviousness, i.e., secondary considerations. *Graham v. John Deere Co.*, 383 U.S. 1, 17–18 (1966).

B. Level of Ordinary Skill in the Art

Petitioner asserts that a person of ordinary skill in the art

> would have had at least a bachelor's degree, or equivalent, in electrical engineering, computer engineering, computer science, or a related field or an equivalent number of years of working experience, and one to two years of experience in networking environments, including at least some experience with live-streaming network architecture.

Pet. 14 (citing Ex. 1001 ¶¶ 72–76). Petitioner additionally asserts that, "[a]dditional education or experience in related fields could compensate for deficits in the above qualifications." *Id.*

Patent Owner asserts:

> A person of ordinary skill in the art would have a bachelor's degree in electrical engineering, computer engineering, computer science, or equivalent degree and, in addition, approximately two years of work experience with Internet video streaming, Internet communication, and related protocols.

Prelim. Resp. 8 (citing Ex. 2001 ¶ 96).

The parties have not addressed whether the differences in these definitions impact the unpatentability analysis before us. We preliminarily adopt Patent Owner's formulation of the level of skill in the art, which is

more specific and appears consistent with the specification and prior art presented, but on the present record we would reach the same determination under Petitioner's formulation of the level of skill.

C. Claim Construction

We interpret the challenged claims

> using the same claim construction standard that would be used to construe the claim in a civil action under 35 U.S.C. 282(b), including construing the claim in accordance with the ordinary and customary meaning of such claim as understood by one of ordinary skill in the art and the prosecution history pertaining to the patent.

37 C.F.R. § 42.100(b). Under that standard, we generally give claim terms their ordinary and customary meaning, as would be understood by a person of ordinary skill in the art at the time of the invention, in light of the language of the claims, the specification, and the prosecution history. *Phillips v. AWH Corp*., 415 F.3d 1303, 1312–14 (Fed. Cir. 2005) (en banc).

1. "socket"/"event socket"

All independent claims include the term "event socket." Ex. 1009, 57:35–67, 59:43–62.

Petitioner argues that "a POSA would have understood a 'socket' to be a uniquely addressable communication endpoint on a server where first event information is provided to a VCD [viewer client device]." Pet. 26 (citing Ex. 1001 ¶ 170). Thus, Petitioner argues, an "event socket" is "a socket where information about one sporting event is provided to a VCD." *Id.*

At this time, Petitioner's proposed constructions of "socket" and "event socket" (Pet. 26) are not disputed by Patent Owner. Prelim. Resp. 8; *see id.* at 52–53 (using Petitioner's proposed construction).

At this preliminary stage in the proceeding, we use Petitioner's proposed construction for "socket" and "event socket."

2. "online gaming information"

Claim 1 recites "first event information germane to the first sporting event, the first event information including *online gaming information*," and claim 12 recites that "the first event information includes first *online gaming information* relating to the first sporting event." Ex. 1009, 57:35–67, 59:43–62 (emphasis added).

Patent Owner argues that, due to the structure of the claim, "online gaming information" is a distinct subset of "event information." Prelim. Resp. 58–59. Patent Owner additionally contends that such information would be "e.g., event information relevant to online gaming, such as odds, wins and losses, or other information relevant to placing bets." *Id.* at 58 (citing Ex. 2001 ¶ 240). Patent Owner appears to contend that Petitioner's citation of "sports score and game status information" (from Ellis) would not correspond to such "online gaming information." *Id.* at 59 (citing Pet. 24). Patent Owner additionally contends, with reference to Herzog, that "lap number, car speed and acceleration" relating to a car race would not teach or suggest "online gaming information." *Id.* at 70–71.

It does not appear that the '218 patent defines or describes "online gaming information." The closest references in the specification are two mentions of "game-related activities" that are said to include "online gaming, board games, chess matches, [and] role-playing games." Ex. 1009, 4:31–32, 8:16–17. These references do not support Patent Owner's assertion that "online gaming information" should be construed as requiring a relationship to placing bets. Dr. Rubin does not provide any evidence to

support the opinion that online gaming information would be "information relevant to placing bets." Ex. 2001 ¶ 240. However, even using Patent Owner's definition of "online gaming information" as requiring such information to be "relevant to placing bets" (Prelim. Resp. 58), Petitioner establishes a reasonable likelihood of prevailing in its unpatentability challenges, as we discuss in greater detail below. For purposes of this Decision, we apply Patent Owner's construction.[6]

3. Additional Claim Terms

Petitioner states that "[t]he claim terms of the '218 should be given their plain and ordinary meaning as understood by a person of skill in the art ('POSA')." Pet. 6. Petitioner does not propose an express construction for any other claim term. *See generally id.*

Patent Owner states "[e]xcept for the 'event socket' term for which Patent Owner applies Petitioner's implied construction . . ., for purposes of this preliminary response, Patent Owner agrees that no terms require construction and construes all other terms consistent with their plain and ordinary meaning." Prelim. Resp. 8.

We decline to provide further analysis or an express construction of any other claim term as doing so is not needed to resolve the dispute between the parties. *Realtime Data, LLC v. Iancu*, 912 F.3d 1368, 1375 (Fed. Cir. 2019) ("The Board is required to construe 'only those terms . . . that are in controversy, and only to the extent necessary to resolve the

[6] During the trial, the parties may wish to address whether this term is directed to the content of information and whether it should be accorded patentable weight. *See, e.g.*, *C R Bard Inc. v. AngioDynamics, Inc.*, 979 F.3d 1372, 1381–82 (Fed. Cir. 2020) (how to determine whether information claimed for communicative content should be accorded patentable weight).

controversy.'") (quoting *Vivid Techs., Inc. v. Am. Sci. & Eng'g, Inc.*, 200 F.3d 795, 803 (Fed. Cir. 1999)).

4. Post-Institution Claim Construction Arguments

The parties may provide additional arguments regarding the proper construction of the claim terms discussed above or other claim terms. To the extent that the parties rely upon claim construction arguments during the course of trial, these arguments should be explicit and should appear in a clearly designated section of briefing. Such arguments should "point out the specific portions of the specification, prosecution history, and relevant extrinsic evidence" to be considered, with explanations of the relevancy of that evidence to the arguments presented. *See* Patent Trial and Appeal Board Consolidated Trial Practice Guide,[7] 84 Fed. Reg. 64,280, at 44–49 (Nov. 2019).

D. Overview of Asserted Prior Art

1. Ellis (Exhibit 1016)

Ellis is titled "Systems and Methods for Providing Enhanced Sports Watching Media Guidance," and discloses systems and methods for accessing and displaying sports-related media content. Ex. 1016, codes (54), (57). Figure 1 of Ellis, reproduced below, illustrates an interactive media system. *Id.* ¶¶ 15, 39.

[7] Available at https://www.uspto.gov/TrialPracticeGuideConsolidated.

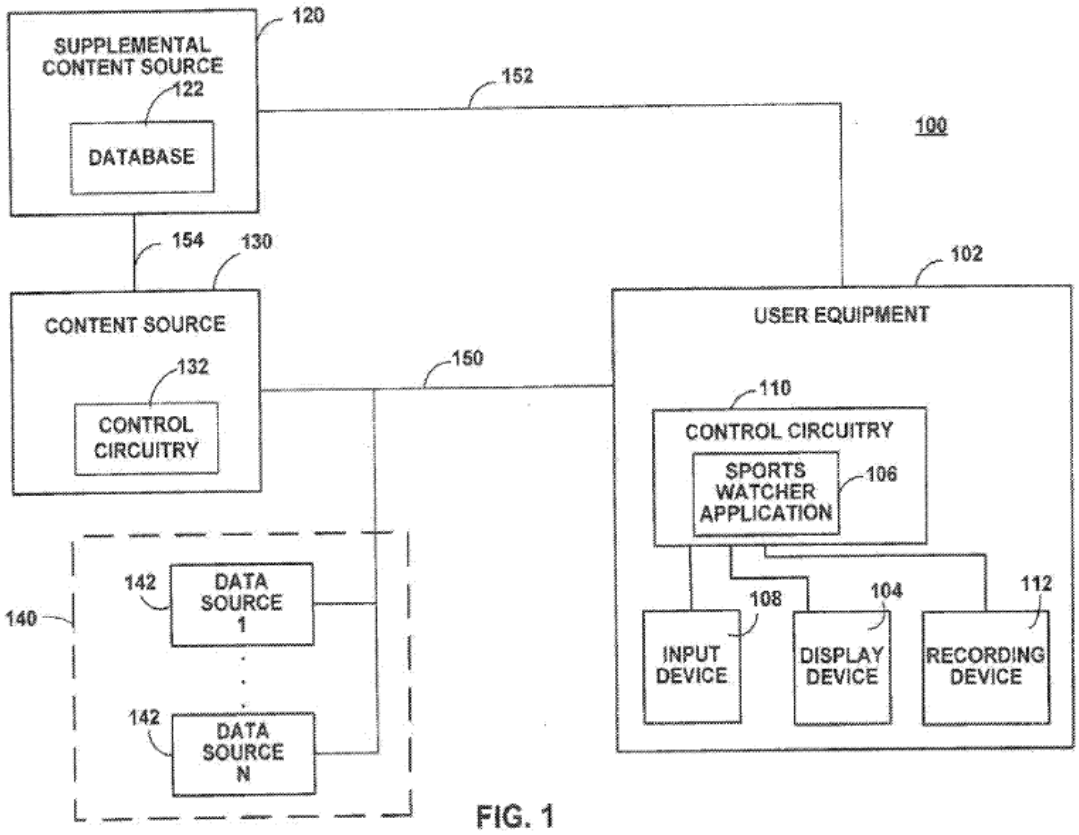

Figure 1 is a block diagram illustrating interactive media system 100. *Id.* ¶¶ 15, 39.

Figure 1 shows interactive media system 100 including user equipment 102, content source 130, supplemental content source 120, and data sources 140. *Id.* ¶ 39. User equipment device 102 receives media content, such as video broadcast programming, from content source 130 via communication path 150. *Id.* ¶¶ 39–40, Fig. 1. User equipment device 102 also receives content, such as real-time sports scores and game summary information, from supplemental content source 120 via communication path 152. *Id.* ¶¶ 39, 41, Fig. 1. Data sources 140 provide data for applications running on user equipment 102. *Id.* ¶ 46.

2. Spivey (Exhibit 1017)

Spivey is titled "Techniques to Broadcast Live Event Data in Real-Time," and discloses a system for broadcasting live event data in real-time. Ex. 1017, codes (54), (57). According to Spivey, its techniques "increase the speed at which live event data (e.g. sports scores and breaking news), are broadcast to mobile devices by using topic queues and open duplex communication connections, among other innovative techniques." *Id.* ¶ 27. Figure 1 of Spivey is reproduced below. *Id.* ¶¶ 3, 34.

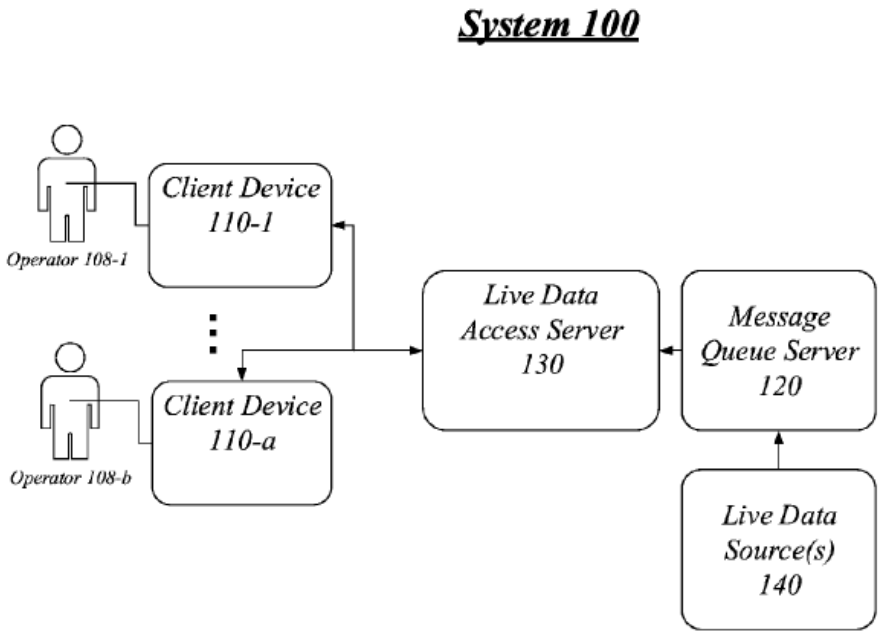

FIG. 1

Figure 1 illustrates system 100 for broadcasting live event data. *Id.* ¶¶ 3, 34.

Figure 1 shows system 100 including client devices 110-1 through 110-a, message queue server 120, and live data access server 130 coupled via one or more networks. *Id.* ¶ 34. Message queue server 120 receives live data from live data source(s) 140 and processes the live data so that it can be provided to client devices 110-1 through 110-a. *Id.* ¶¶ 35–37. Live data

access server 130 interfaces between message queue server 120 and client devices 110-1 and 110-a. *Id.* ¶ 38.

Figure 4 of Spivey, reproduced below, illustrates operating environment 400. *Id.* ¶¶ 6, 53.

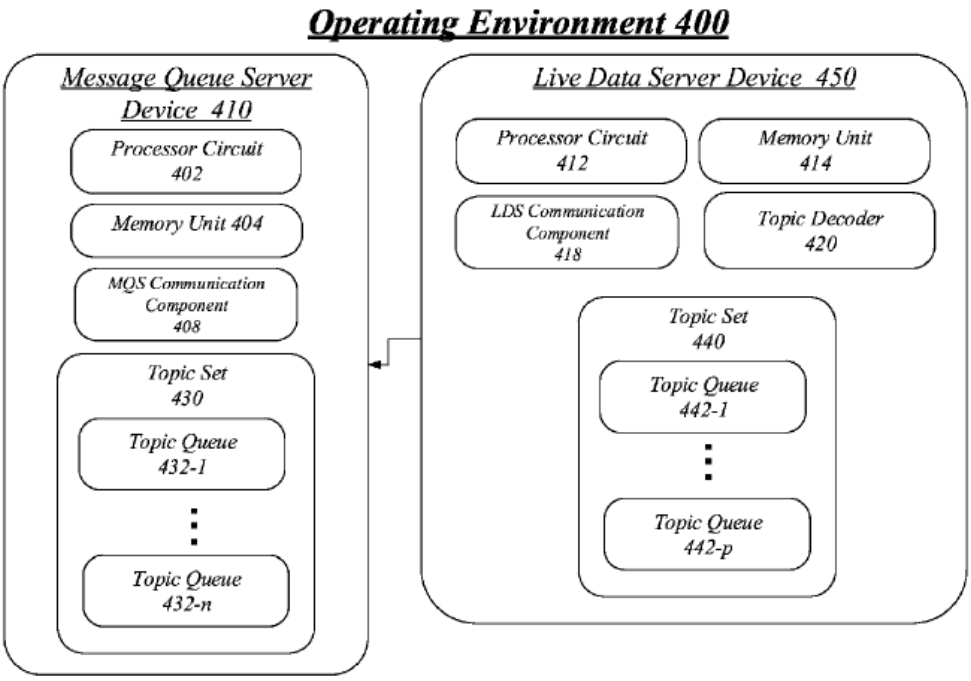

FIG. 4

Figure 4 illustrates operating environment 400. *Id.* ¶¶ 6, 53.

Figure 4 shows operating environment 400, in which message queue server 120 is implemented as message queue server device ("MQSD") 410 and live data server device 450. *Id.* ¶ 53. Message queue server device 410 includes communication component 408, topic set 430, and topic queues 432. *Id.* ¶ 54. Live data server device 450 includes live data server communication component 418 that allows live data server device 450 to receive live data and transmit it to message queue server device 410. *Id.* ¶ 55. Live data server device 450 also includes topic decoder 420, topic set 440, and topic queues 442. *Id.* ¶ 56.

3. *Herzog (Exhibit 1015)*

Herzog is titled "Time Synchronization of Video and Data Inside a Mobile Device," and discloses a mobile device including a processor configured to receive and format live video data, audio data, and meta-data for display on the mobile device, and synchronize selected meta-data with the video and audio for simultaneous display. Ex. 1015, codes (54), (57). Figure 4 of Herzog, reproduced below shows a system 40 that provides communications for mobile devices. *Id.* ¶¶ 9, 43.

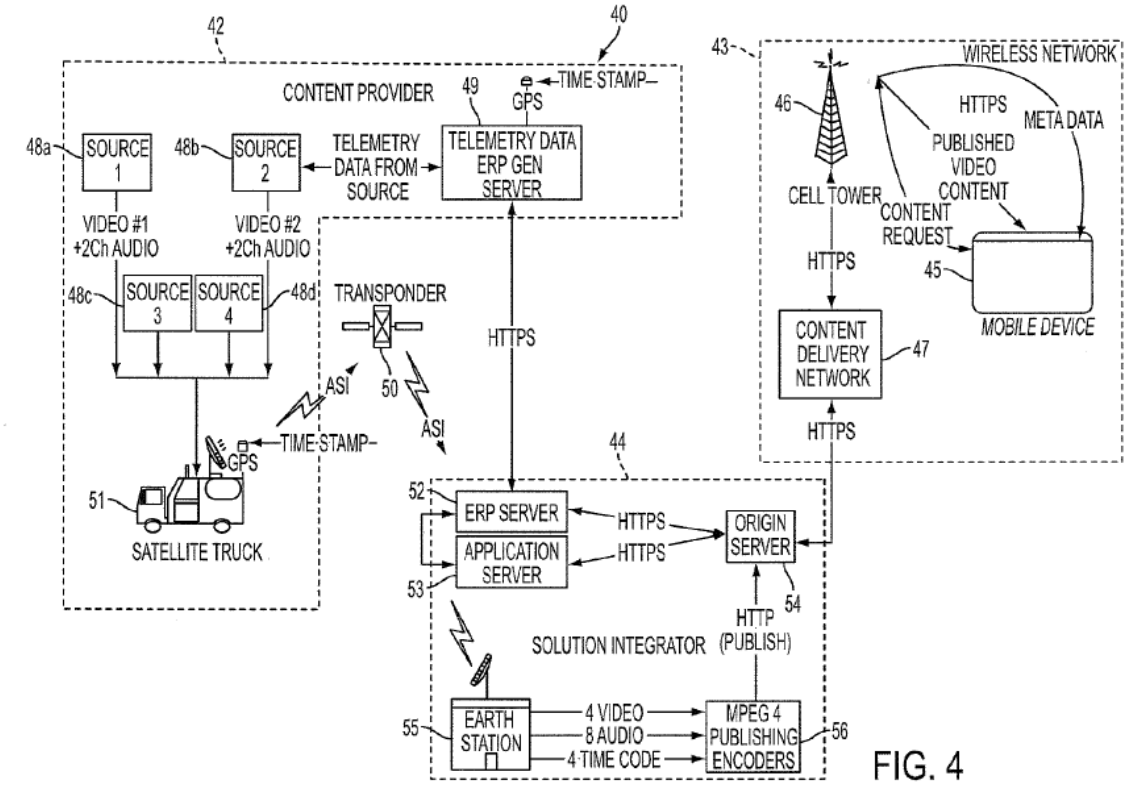

Figure 4 shows system 40 that provides communications to exemplary mobile device 45. *Id.* ¶¶ 9, 43.

As shown in Figure 4, system 40 provides communications to mobile device 45 in wireless network 43 via content delivery network 47. *Id.* ¶ 43. System 40 includes content provider 42, which provides video and audio data of an event occurring in real time, along with meta-data. *Id.* ¶ 45.

Content provider 42 provides video/audio streams from imaging sources 48*a*–48*d*. *Id.* ¶ 46. Content provider 42 also includes an Enhanced Result Protocol (ERP) generator server 49 configured to receive meta-data from imaging sources 48*a*–48*d*. *Id.* ¶ 47. ERP generator server 49 extracts meta-data parameters that may be of interest to a user, formats the extracted meta-data into a Hypertext Transfer Protocol Secure (HTTPS) protocol, and transmits the formatted meta-data to solution integrator 44. *Id.* Solution integrator 44 transmits the video/audio stream and meta-data to content delivery network 47 for delivery to mobile device 45. *Id.* ¶¶ 48–51.

E. Asserted Obviousness over Ellis and Spivey (Ground 1A)

Petitioner asserts that claims 12–15 are unpatentable as obvious over Ellis and Spivey. Pet. 19–34. Patent Owner disputes Petitioner's showing for independent claim 12. Prelim. Resp. 36–60.

1. Independent Claim 12 – Obviousness over Ellis and Spivey (Ground 1A)

a) Motivation to Combine

Petitioner's proposed combination of the teachings of Ellis and Spivey involves substituting Spivey's server devices that use websocket connection technology for Ellis's supplemental content source. Pet. 19–22 (citing, *inter alia*, Ex. 1001 ¶¶ 106–111; Ex. 1016 ¶¶ 39, 41, Fig. 1; Ex. 1017, Fig. 4). In particular, Petitioner argues that a person of ordinary skill in the art would have implemented Ellis's supplemental content source 120 with Spivey's live data server device 450 and message queue server device 410, such that data would have been delivered using a websocket connection instead of HTTPS. *Id.* at 18–20 (citing, e.g., Ex. 1001 ¶¶ 106–115; Ex. 1016 ¶¶ 39–41, 156, Fig. 1; Ex. 1017 ¶¶ 28, 96, Fig. 4). Ellis describes that its supplemental content source 120 provides real-time data feeds with sports-related

information, such as sports scores. *See, e.g.*, Ex. 1016 ¶ 41. Similarly, Spivey describes that its system including live data server device 450 and message queue server device 410 provides live event data, such as data about sporting events. *See, e.g.*, Ex. 1017 ¶ 28, Fig. 4.

Petitioner makes three arguments in support of its position that a person of ordinary skill in the art would have made its proposed combination. Pet. 20–24. First, Petitioner argues that its proposed combination would have been made to improve latency issues in Ellis's system. *Id.* at 20–22. Second, Petitioner argues that Ellis and Spivey relate to the same subject matter and the references solve the same or similar problems. *Id.* at 23. Third, Petitioner argues that its proposed combination would have been obvious because it "would have required only the simple substitution of known elements for another to obtain predictable results." *Id.* at 23–24. Petitioner takes the position that these same arguments support that a person of ordinary skill in the art would have had a reasonable expectation of success. *Id*. at 24.

Patent Owner makes three arguments in support of its position that Petitioner has not shown that a person of ordinary skill in the art would have combined the teachings of Ellis and Spivey. Prelim. Resp. 36–47. First, Patent Owner argues that Petitioner's proposed combination is inoperable and departs from the express teachings of Ellis because Petitioner's proposed combination removes Ellis's supplemental content source 120 having database 122 and replaces it with "Spivey's database-less system." *Id.* at 36–40. Second, Patent Owner argues Petitioner's reasons do not "withstand scrutiny" in part because of differences in the references' teachings and because Petitioner does not show a person of ordinary skill in

the art would have had a reasonable expectation of success. *Id.* at 40–45. Third, Patent Owner argues Petitioner relies on impermissible hindsight bias to "reconstruct the invention" from "cherry-picked" prior art teachings. *Id.* at 45–47.

For the reasons given below, we find that Petitioner's arguments are supported by the evidence in the preliminary record before us and that Patent Owner's arguments do not undermine Petitioner's showing. For instance, Petitioner's first argument, that its proposed combination would have been made to improve latency issues in Ellis's system (Pet. 20–22), is supported by Spivey's disclosure that its techniques "may reduce . . . delay [on the order of seconds (e.g., 30 to 45 seconds) or minutes] to an order of milliseconds (ms) (e.g., 100 ms) or less, providing a significant advantage over the conventional practices." Ex. 1017 ¶ 28. Spivey also discloses pushing data "to the subscribed connected client devices substantially simultaneously with the message queue server receiving the topic entry from a live data source, e.g., with a time delay of 100 milliseconds or less," which Spivey discloses is "at least two orders of magnitude shorter than conventional time periods of legacy devices." *Id.* ¶ 96*; see also id.* at code (57) (disclosing pushing "the topic entry to a subscribed client device substantially simultaneously with the message queue server receiving the topic entry from a live data source").[8]

---

[8] Petitioner's position is also supported by the testimony of Dr. Wicker that "[w]ebsockets protocol was an emerging technology that offered particular benefits for low-latency streaming when compared to the existing communication protocols" and that a person of ordinary skill in the art "would have appreciated the benefits associated with the websocket connection" described in Spivey. Ex. 1001 ¶ 110 (citing Ex. 1017 ¶¶ 43, 61,

Petitioner's second and third arguments and its arguments relating to reasonable expectation of success (Pet. 23–24) also are supported by the evidence in the preliminary record showing the similarity between, and complementary nature of, the Ellis and Spivey disclosures of providing content delivery for real-time events quickly to multiple users. *See, e.g.*, Ex. 1016, code (57) (describing "[s]ystems and methods for enhanced sports-related media content access and display"), ¶ 39 (describing that in system 100 "[u]ser equipment device 102 receives content . . . from content source 130 and/or supplemental content source 120 over communications paths 150 and 152, respectively" and "[a]ny suitable number of users may have one or more user equipment devices, such as user equipment 102"), ¶ 40 (describing that "[c]ontent source 130 may be any suitable source of media content" such as the "Internet or network media/web server" and that "[m]edia content" includes "broadcast programming," "news," "newsgroups," and "chat rooms"), ¶ 41 (describing that "[s]upplemental content source 120 may be any suitable content source configured to provide real-time sports scores and game summary information . . . [and] sports commentary" as well as other "sports-related information" via "a plurality of real-time data feeds"); Ex. 1017, code (57) (describing "[a]n apparatus to broadcast live event data in real-time" that receives "a topic entry from a message queue server" and pushes "the topic entry to a subscribed client

---

74, 92; Ex. 1046, 46). The article cited by Dr. Wicker provides further evidentiary support for Petitioner's position and Dr. Wicker's testimony. Ex. 1046, 46 (describing that the "WebSocket protocol enables full-duplex communication between a client and a remote host over a single TCP socket" and provides "three-to-one reduction in latency against half-duplex HTTP polling applications").

device substantially simultaneously with the message queue server receiving the topic entry from a live data source"), ¶ 27 (describing techniques for broadcasting "media content in real-time" and that the "media content may comprise, for example, data from a live event (e.g., news event, a gaming event, sporting event, etc.)" and that "live event data (e.g., sports scores and breaking news)" also is broadcasted), ¶ 34 (describing "system 100 for broadcasting live data in real-time" that includes "client devices 110-1 through 110-*a*").

Petitioner's second and third arguments and its arguments relating to reasonable expectation of success (Pet. 23–24) also are supported by the evidence in the preliminary record showing that Ellis and Spivey both disclose that content is provided over the Internet. For instance, Ellis describes that "[c]ontent source 130 and supplemental content source 120 may be configured to transmit signals to user equipment 102 over any suitable communication paths 150 and 152" (Ex. 1016 ¶ 45) and that, in certain embodiments, content is delivered "on a particular network address (e.g., multicast address) on which an IP socket is currently joined." Ex. 1016 ¶¶ 45, 74. Also, Spivey describes "[a]n apparatus to broadcast live event data in real-time" that receives "a topic entry from a message queue server" and pushes "the topic entry to a subscribed client device substantially simultaneously with the message queue server receiving the topic entry from a live data source" and that the subscribed client device receives data over "a websocket connection." Ex. 1017, code (57), ¶¶ 43, 61, 74, 92; Ex. 1001 ¶ 110.

On the other hand, at this preliminary stage, we find that Patent Owner's arguments (Prelim. Resp. 36–47) and Dr. Rubin's cited testimony

are inconsistent with certain evidence in the preliminary record that supports Petitioner's position. For example, Patent Owner's first argument (Prelim. Resp. 36–40) and Dr. Rubin's related testimony (Ex. 2001 ¶¶ 165, 168, 173, 182, 185, 187–191), that Petitioner's proposed combination is inoperable and departs from the express teachings of Ellis because Petitioner's proposed combination removes database 122 and replaces it with "Spivey's database-less system," is not consistent with evidence that Spivey discloses sources of data for transmission to client devices. For instance, Spivey discloses "data feeds" that are "generated by computing devices associated with a live event" and "data gathered by human observers of a live event and entered into an interface that communicates the gathered data." Ex. 1017 ¶ 37. Also, Spivey describes "broadcasting live data in real-time" (*id.* ¶ 34) and receiving "live data in the form of a topic entry," which may include "a score, a play, an error, an injury, a player-at-bat" when "the live event is a sporting event" (*id.* ¶¶ 47–48). Additionally, Ellis describes database 122 as optional stating that "sports-related information *may be* stored in database 122." Ex. 1016, Fig. 1, ¶ 42 (emphasis added).

Patent Owner also argues the proposed combination would be inoperable because Spivey's teachings "are not tied to video delivery" and Petitioner does not address "how immediately pushed data could somehow be throttled or gated in a manner to synchronize with any associated television programming." Prelim. Resp. 38. Patent Owner's argument (*id.*) and Dr. Rubin's related testimony (Ex. 2001 ¶¶ 168, 185, 194–198, 200–203) are not consistent with evidence that Spivey describes its teachings as associated with broadcasting a live event. For example, Spivey's system 100 broadcasts "live event data in real-time" and includes "a subscription

component . . . to receive a topic entry from a message queue server, and to push the topic entry to a subscribed client device." Ex. 1017, code (57), ¶ 31. Spivey also describes that its live data sources are "associated with a live event." *Id.* ¶ 37; *see also id.* ¶ 48 (describing that the topic entry "may include any media information about at least one of a live event (e.g., new, game, sport, activity, and so forth)"). Additionally, claim 12 requires only "first event information germane to a first live sporting event" and, on the present record and preliminarily, we determine that claim 12 not recite that the first event information must be gated or synchronized with the first live sporting event; thus, this argument is not commensurate with the scope of claim 12.

On the present record, Patent Owner's arguments relating to differences in the references' teachings and its arguments that Petitioner does not show a person of ordinary skill in the art would have had a reasonable expectation of success (Prelim. Resp. 40–45), and Dr. Rubin's testimony related to these arguments (Ex. 2001 ¶¶ 168, 187, 194–197, 202–204), appear to be based on incorrect characterizations of the evidence of record. For instance, Patent Owner argues that "Ellis and Spivey do not relate to the same subject matter . . . . Spivey delivers data —i.e., information; Ellis helps a viewer change a TV channel. Ellis therefore resides within a field that necessarily includes video delivery, unlike Spivey." Prelim. Resp. 42. But these arguments, and arguments that Ellis pertains to "viewing and tuning" and that Spivey is not relevant to "how sports viewers commonly ***watch*** and interact with displayed sporting events" (Prelim. Resp. 42–43), as well as Dr. Rubin's related testimony (Ex. 2001 ¶¶ 206–210, 212–215), are based on only a subset of the teachings of both

references, rather than the teachings of the references in their entirety. For example, Ellis describes providing real-time data such as sports scores (*see, e.g.*, Ex. 1016 ¶ 41) and Spivey describes, for example, that its live data feeds are generated by computing devices associated with a live event (Ex. 1017 ¶ 37), as discussed above. We must consider the teachings of the references as a whole, from the perspective of an ordinarily skilled artisan. *See Sundance, Inc. v. DeMonte Fabricating Ltd.*, 550 F.3d 1356, 1361 n.3 (Fed. Cir. 2008) ("What a prior art reference discloses or teaches is determined from the perspective of one of ordinary skill in the art."); *In re Hedges*, 783 F.2d 1038, 1041 (Fed. Cir. 1986) (noting that when evaluating claims for obviousness, "the prior art as a whole must be considered").

Patent Owner's remaining arguments that Petitioner relies on impermissible hindsight bias to "reconstruct the invention" from "cherry-picked" prior art teachings (Prelim. Resp. 45–47) and Dr. Rubin's related testimony (Ex. 2001 ¶¶ 165–168, 207–210) are premised on many of the same arguments we find unpersuasive at this stage. As discussed above, Petitioner's argument that its proposed combination would have been made to improve latency issues in Ellis's system (Pet. 20–22) is supported by Spivey's disclosures. Spivey describes, for example, that "the data payload of the topic entry may be pushed to the subscribed connected client devices substantially simultaneously with the message queue server receiving the topic entry from a live data source, e.g., with a time delay of 100 milliseconds or less." Ex. 1017 ¶ 96. As shown in Figure 1 of Spivey, live data source(s) 140 is connected to client devices 110-1 through 110-a via message queue server 120 and live data access server 130. *Id.* at Fig. 1. Spivey describes that Figure 4 illustrates an embodiment of message queue

server 120. *Id.* ¶ 53. Thus, based on the preliminary record before us at this juncture, we find that Petitioner's proposed substitution of message queue server device 410 and live data server device 450 into Ellis is consistent with Petitioner's rationale to combine the teachings of Ellis and Spivey, which is to reduce latency.

We find based on the preliminary record before us that Petitioner provides sufficient rationale to combine the teachings of Ellis and Spivey for purposes of institution. We also find that Petitioner has shown sufficiently for purposes of institution that a person of ordinary skill in the art would have had a reasonable expectation of success.

b) Objective Indicia of Non-Obviousness

Patent Owner asserts that objective indicia of non-obviousness support its position that Petitioner has not shown a reasonable likelihood of unpatentability of the challenged claims. *See* Prelim. Resp. 73–80. Specifically, Patent Owner asserts long-felt need, industry praise, Petitioner's praise and copying of the claimed invention, and commercial success support Patent Owner's position.

To accord substantial weight to objective evidence of nonobviousness, the evidence must have a nexus to the claims. *Fox Factory, Inc. v. SRAM, LLC*, 944 F.3d 1366, 1373 (Fed. Cir. 2019). "A showing of nexus can be made in two ways: (1) via a presumption of nexus, or (2) via a showing that the evidence is a direct result of the unique characteristics of the claimed invention." *Volvo Penta of the Americas, LLC v. Brunswick Corp.*, 81 F.4th 1202, 1210 (Fed. Cir. 2023). A patentee is entitled to a presumption of nexus "when the patentee shows that the asserted objective evidence is tied to a specific product and that product 'embodies the claimed features, and is

coextensive with them.'" *Fox Factory*, 944 F.3d at 1373 (quoting *Polaris Indus., Inc. v. Arctic Cat, Inc.*, 882 F.3d 1056, 1072 (Fed. Cir. 2018)). As discussed below, Patent Owner has not shown nexus between the challenged claims and its asserted objective indicia of non-obviousness.

Starting with Patent Owner's arguments regarding praise and copying, we find that Patent Owner's arguments are conclusory based on the record at this stage of the proceeding. Patent Owner does not discuss a specific product or show that it embodies and is coextensive with the claimed features, nor does Patent Owner show that the evidence is a direct result of unique characteristics of the claimed invention. Although Patent Owner alleges copying, Patent Owner does not name a particular product of Petitioner's that allegedly copied Patent Owner's products. *See* Prelim. Resp. 77–78. Rather, Patent Owner merely cites to a 38-page infringement claim chart from the related parallel proceeding. *Id.* at 77 (citing Ex. 2017). Patent Owner is reminded that "[a]rguments must not be incorporated by reference from one document into another document." 37 C.F.R. § 42.6(a)(3). At this stage, we decline to "play archeologist with the record" in order to understand Patent Owner's arguments, which "is precisely what the rule against incorporation by reference was intended to prevent." *Gen. Access Sols., Ltd. v. Sprint Spectrum L.P.*, 811 F. App'x 654, 657–58 (Fed. Cir. 2020). Patent Owner also relies on short e-mails including one regarding Patent Owner's work "around sports broadcast with social commentators, graphics and real time chat." Prelim. Resp. 77 (quoting Ex. 2016). Based on the current record, we find that these emails alone do not support sufficiently that Petitioner had access to a patented product. For

these reasons, and based on the present record, we accord Patent Owner's evidence of copying little to no weight.

Patent Owner's arguments regarding nexus are limited to conclusory assertions and incorrect, over-simplified characterizations of the claimed technology. Prelim. Resp. 74–80. These arguments fail to establish an adequate nexus to the claims of the '218 patent.

Patent Owner's evidence does not establish *long felt* and *unsolved* need, describing "[b]roadcast latency [being] recognized by stream platforms around [the] mid-2010s" (Ex. 2001 ¶ 73) and citing an article from 2015 (Ex. 2034) , while the '218 patent claims priority to provisional applications filed in 2016 and 2017. Prelim. Resp. 74; Ex. 1009, code (60). Certain of Patent Owner's industry praise evidence does not appear to be disinterested. For example, Patent Owner quotes former NBA commissioner David Stern, but the articles cited describe Mr. Stern as "one of SportsCastr.Live's high-profile partners" and "a founding investor." Ex. 2007, 2; Ex. 2008, 1; Prelim. Resp. 76. Commercial success would "usually [be] shown by significant sales in a relevant market." *Ormco Corp. v. Align Technology, Inc.*, 463 F.3d 1299, 1311–12 (Fed. Cir. 2006). However, while Patent Owner asserts commercial success, it cites no relevant evidence of sales, but relies mainly on evidence that Patent Owner advertised a product to show commercial success. Prelim. Resp. 79 (citing Ex. 2010; Ex. 2011).

Accordingly, on the present record, we are not persuaded that Patent Owner has demonstrated a nexus between the challenged claims and the asserted objective evidence of non-obviousness, and we additionally find

certain of Patent Owner's evidence of objective indicia of non-obviousness to be flawed or incompletely developed.

For the above reasons, we do not accord substantial weight to Patent Owner's objective evidence at this stage.

> *c) 12.0 - "A method for providing, to a first client device, first event information germane to a first sporting event, wherein the first event information includes first online gaming information relating to the first sporting event, the method comprising"*

Petitioner argues that, to the extent the preamble is limiting, Ellis discloses the preamble. Pet. 24–25 (citing Ex. 1016 ¶ 41, Fig. 1; Ex. 1001 ¶ 167).[9] Petitioner relies on Ellis's supplemental content source (SCS), which provides ""plurality of real-time data feeds," which can include "sports score and game status information" and "sports commentary." *Id.* at 24 (quoting Ex. 1016 ¶ 41).

Patent Owner disputes two aspects of Petitioner's showing with respect to the preamble of claim 12 in this ground. Prelim. Resp. 58–60. First, Patent Owner contends that Ellis's "sports score and game status information" does not teach or suggest "online gaming information" because it is not relevant to placing bets. Prelim. Resp. 59. Using Patent Owner's definition of "online gaming information" as requiring such information to be "relevant to placing bets" (Prelim. Resp. 58), on the present record, "sports score and game status information" would be such "information relevant to placing bets." *See* Ex. 1016 ¶ 116 ("Wager types may include

[9] As we determine, preliminarily and for the purposes of institution, that Petitioner sufficiently shows that the preamble would have been obvious in view of Ellis, we need not decide at this stage whether the preamble is limiting.

final score, half-time score, . . . or any other sports-specific wager type."); Ex. 1001 ¶¶ 88, 93 (Ellis "discloses an interactive system for watching sports content, including 'wagering and fantasy league support'" and Ellis's content provided includes "spread and wagering data" among other "sports-related information.") (citing/quoting Ex. 1016, code (57), ¶ 41); *see* Pet. 33–34, 81.

Patent Owner additionally argues that the cited "sports score and game status information" provided by Ellis's supplemental content source from its database is not present in the combination proposed by Petitioner, because the supplemental content source is replaced by Spivey's live data server device and message queue server device" and because "Petitioner does not even allege that the functionality of Ellis's supplemental content source would be maintained in the modified combination." Prelim. Resp. 59–60. However, the Petition proposes "*implementing* Ellis's [supplemental content source] using Spivey's [live data server device] and adding Spivey's [message queue server device]" resulting in a combined system that would "*upgrade* the supplemental content data delivery system." Pet. 21–22 (emphases added). Thus, Patent Owner's argument that the supplemental content server is merely replaced by these elements of Spivey is not commensurate with the Petitioner's proposed combination in which Ellis's supplemental content server is implemented by the Spivey elements. Additionally, as discussed above, Spivey's "data feeds" and "live data" (Ex. 1017 ¶¶ 34, 37, 48) and the fact that Ellis's database is optional (Ex. 1016 ¶ 42) teach or suggest, on the present record and preliminarily, that the information would still be available in the asserted combination.

Petitioner's contentions are supported by the cited portions of Ellis. After consideration of the contentions and the evidence of record at this preliminary stage, we find that Petitioner has shown sufficiently that Ellis teaches the preamble of claim 12 for purposes of institution.

> *d) Limitation 12.1 - "A) transmitting the first online gaming information to at least the first client device via a first event information communication channel between a first event socket of at least one socket server and the first client device, wherein the first event socket corresponds to the first event information germane to the first sporting event;"*

Petitioner asserts that, in the proposed combination of Ellis and Spivey, a topic queue as taught in Spivey, available from Spivey's message queue server device, is a uniquely addressable communication endpoint on a server where first event information is provided to a client. Pet. 25–27. Petitioner asserts that in Spivey, the client devices may request and participate in a websocket connection, and one of ordinary skill would have understood this to be a connection between a client and a socket server. *Id.* at 25–26 (citing Ex. 1017, code (57), ¶¶ 43, 61; Ex. 1001 ¶¶ 168–173). Petitioner cites the topic queues of Spivey's message server device, which are subscribed to by a client through topic label text strings, after which data is pushed to subscribed connected devices. *Id.* at 26–27 (citing Ex. 1017 ¶¶ 48, 49, 51–52, 66, 81–84, 96, Fig. 9). Thus, Petitioner argues, in the proposed combination, the Spivey topic queues and the Ellis content source teach or suggest a first event socket and the transmission of online gaming information to a client. *Id.* at 25–27 (citing Ex. 1001 ¶¶ 168–173).

Patent Owner responds with three arguments. Prelim. Resp. 47–58. First, Patent Owner argues "Spivey does not disclose a 'websocket

connection' or channel between its message queue server and client devices"; "[r]ather, Spivey discloses a websocket connection between a live data access server and client devices," which Petitioner omitted without sufficient explanation. *Id.* at 47–51 (citing, *inter alia*, Ex. 1017 ¶¶ 43, 51, 53, 57, 61, 74, Figs. 1, 4; Ex. 2001 ¶¶ 220–225, 227–229). Second, Patent Owner argues "Petitioner fails to show that Spivey's topic queues are '*event sockets*' under Petitioner's (and its [declarant's]) implied definition, which requires them to be 'uniquely addressable communication endpoint[s].'" *Id.* at 51–57 (citing Ex. 1017 ¶¶ 38–39, 46–54, 71–82, 128, 131, Fig. 7; Ex. 2001 ¶¶ 129–131, 175–177, 231–236, 238–239). Third, Patent Owner argues "Petitioner fails to articulate sufficient motivation to combine and modify the prior art." *Id.* at 57–58 (emphasis omitted).

We start with Patent Owner's first argument that "Spivey does not disclose a 'websocket connection' or channel between its message queue server and client devices"; "[r]ather, Spivey discloses a websocket connection between a live data access server and client devices," which Petitioner omitted without sufficient explanation. *Id.* at 47–51 (citing, *inter alia*, Ex. 1017 ¶¶ 43, 51, 53, 57, 61, 74, Figs. 1, 4; Ex. 2001 ¶¶ 220–225, 227–229). Dr. Wicker testifies that a person of ordinary skill in the art "would have understood Spivey to disclose a direct connection between the client devices and MQSD" and that a person of ordinary skill in the art "would have used this implementation because reducing the amount of server transfers would reduce latency, which is Spivey's main purpose." Ex. 1001 ¶ 175 n.3.

In contrast, Dr. Rubin testifies

> Spivey does not, as Petitioner alleges, disclose a 'websocket connection' or channel between the message queue

> server (comprising the message queue server device and live data server device) and a viewer client device, nor would a POSITA have been motivated to modify the prior art teachings to achieve such a channel.

Ex. 2001 ¶ 219.

After weighing the testimony of Dr. Wicker and Dr. Rubin, based on the preliminary record, we find Dr. Wicker's testimony to be supported by the evidence of record and we, therefore, give Dr. Wicker's testimony more weight. Although we agree with Patent Owner and the testimony of Dr. Rubin to the extent that we find Spivey discloses live data access server 130 connected to client devices 110-1 through 110-a in certain embodiments (*see, e.g.*, Ex. 1017, Fig. 1), at this stage of the proceeding, we also find that Spivey teaches or at least suggests a direct connection between message queue server device 410 and client devices 110-1 through 110-a.

For example, based on the preliminary record, we find that Petitioner's arguments and Dr. Wicker's testimony are supported by Spivey's disclosure that message queue server device 410 "may be substantially similar" to message queue server device 310 (Ex. 1017 ¶ 54 (quoted at Pet. 59)) and "MQS communication component 308 [included in message queue server device 310] may . . . receive requests to subscribe to topics in a topic set 330, and may push data from topic queues 332-1, 332-*n to the subscribers of the topics corresponding to those topic queues*." *Id.* ¶ 46 (emphasis added) (cited at Pet. 29 n.7). Spivey also discloses that message queue server device 410 "may be implemented as a RABBITMQ[ ] server," which is an "open source message broker software." *Id.* ¶ 58.[10]

[10] Paragraph 58 describes message queue server device 410 shown in Figure 4, which is relied on in the Petition. *See, e.g.*, Pet. 21–22, 27–28.

Spivey describes in that embodiment, topic queues in message queue server device 410 "push the messages *to clients that have subscribed to the topic queues*." *Id.* (emphasis added).

Spivey discloses that its message queue server "may comprise one or more electronic devices capable of receiving, processing, and sending information *for the system 100*." *Id.* ¶ 35 (emphasis added) (cited in Pet. 20, 34). Spivey further describes that message queue server 120 processes "live data to provide live data quickly *to the client devices 110-1 through 110-a*." *Id.* ¶ 36 (cited in Pet. 29 n.7). Spivey also discloses clients and servers communicating information with each other over, "a packet-switched network (e.g., public networks such as the Internet)." *Id.* ¶ 178 (cited in Pet. 41).

Based on the preliminary record, we also find that Petitioner's arguments and Dr. Wicker's testimony that live data access server 130 is optional are supported by Spivey. For example, Spivey discloses that "system 100 *may* include a live data access server 130." *Id.* ¶ 38 (emphasis added) (cited in Pet. 29 n.7). Live data access server is described as "a public interface." *Id.* Furthermore, based on the preliminary record, we find that Spivey's disclosure that "[i]n some embodiments," message queue server is not accessible to clients "directly" because it is, for example, "behind a firewall" sufficiently supports that Spivey teaches or at least suggests that the firewall is optional. *Id.* ¶ 36 (cited in Pet. 29 n.7).

Regarding Patent Owner's argument that "it is unclear how Spivey's message queue server device 410 could include the claimed event socket" (Prelim. Resp. 50–51), we find, based on the preliminary record, that Petitioner's argument and Dr. Wicker's testimony are supported by Spivey's

disclosure of user interface 900 presented by live data app 210 residing on client device 200 that "allow[s] an operator 108 of a client device 110 to view and select topics of live data to subscribe to," which may comprise, for example, "the topics available from a message queue server." Ex. 1017 ¶ 84, Figs. 2, 9.

We also disagree with Patent Owner's argument that Spivey's live data access server was "omitted" without sufficient explanation. Prelim. Resp. 48. Dr. Wicker testifies in his opinion a person of ordinary skill in the art "would have used this implementation [the implementation of system 100 with a direct connection between client devices and MQSD] because reducing the amount of server transfers would reduce latency, which is Spivey's main purpose." Ex. 1001 ¶ 175 n.3. We find this explanation sufficient for purposes of institution.

We next turn to Patent Owner's second argument that "Petitioner fails to show that Spivey's topic queues are '*event sockets*' under Petitioner's (and its [declarant's]) implied definition, which requires them to be 'uniquely addressable communication endpoints.'" Prelim. Resp. 51–57 (citing Ex. 1017 ¶¶ 38–39, 46–54, 71–82, 128, 131, Fig. 7; Ex. 2001 ¶¶ 129–131, 175–177, 231–236, 238–239). As discussed above with respect to claim construction (§ IV.C.1), Petitioner argues that "a POSA would have understood a 'socket' to be a uniquely addressable communication endpoint on a server where first event information is provided to a VCD." Pet. 26 (citing Ex. 1001 ¶ 170). Patent Owner states with respect to the term "event socket" that it "applies Petitioner's implied construction." Prelim. Resp. 8. At this stage of the proceeding, therefore, Petitioner's proposed construction

of "event socket" (Pet. 26) is not disputed by Patent Owner (Prelim. Resp. 8) and we use that construction in our analysis.

Patent Owner argues that a person of ordinary skill in the art "would have understood that Spivey's 'topic queue' is merely an organization of data, such as a database table, that includes information about a particular topic" and that "Spivey nowhere discloses or suggests that the topic queues are 'uniquely addressable' or 'communication endpoints.'" Prelim. Resp. 52 (citing, e.g., Ex. 2001 ¶¶ 231–236). Dr. Rubin testifies that a person of ordinary skill in the art "would not consider such a database, message queue, or any other internal data structure by themselves to be a 'uniquely addressable communication endpoint[]' because, as disclosed in Spivey, the queues themselves lack an address through which they can communicate at all." Ex. 2001 ¶ 232. Dr. Rubin also testifies that "[t]he only potential 'communication endpoint' Spivey discloses as being 'uniquely addressable' is the live data access server." *Id.* ¶ 233.

Dr. Wicker testifies as follows:

> Topic queues have a corresponding "topic label" which is used to identify a topic queue. *Id.* ¶49. "A topic label may be, for example" a "text string such as gamecenter.nfl.ravenssteelers." *Id.* ¶66.
>
> Client devices use these topic label text strings to connect and subscribe to MQSD's topic queues. First, client devices "request a live data connection" with the MQSD by "select[ing] or enter[ing] the address or connection information to a particular" MQSD. *See id.* ¶¶81-82. This "address may resemble a uniform resource locator (URL)." *Id.* ¶82. Second, as shown in Figure 9, client devices can use the topic labels to select "the topics available from [the MQSD] in a topic selection list" and "subscribe to" those topic queues . . . . *Id.* ¶¶83-84, Fig. 9.

Ex. 1001 ¶¶ 171–172.

Based on the preliminary record, we find that Petitioner's arguments and Dr. Wicker's testimony are supported by Spivey's disclosures that an "address may resemble a uniform resource locator (URL)" and that user interface 900 "allow[s] an operator 108 of a client device 110 to view and select . . . topics available from a message queue server." Ex. 1017 ¶¶ 82, 84, Fig. 9. Based on the preliminary record, we find that Dr. Rubin's testimony is limited to addressing live data access server 130 and does not address sufficiently Spivey's teachings as a whole understood from the perspective of an ordinarily skilled artisan. *See Sundance*, 550 F.3d at 1361 n.3 ("What a prior art reference discloses or teaches is determined from the perspective of one of ordinary skill in the art."); *Hedges*, 783 F.2d at 1041 (noting that when evaluating claims for obviousness, "the prior art as a whole must be considered"). We, therefore, give Dr. Rubin's testimony less weight than Dr. Wicker's testimony at this preliminary stage.

We now turn to Patent Owner's third argument that "Petitioner fails to articulate sufficient motivation to combine and modify the prior art." *Id.* at 57–58 (emphasis omitted). Patent Owner repeats its arguments that we address above with respect to Petitioner's reasoning to combine. *Compare* Prelim. Resp. 57–58, *with id.* at 36–47. For the reasons discussed above, we find based on the preliminary record before us that Patent Owner's arguments do not undermine Petitioner's showing. *See* § IV.E.1.a.

In summary, with respect to limitation 12.1, after consideration of the arguments and evidence of both parties, we find that Petitioner's contentions are supported by the cited portions of Ellis and Spivey and that Patent Owner's arguments do not undermine Petitioner's showing. Based on the record at this preliminary stage, therefore, we find that Petitioner has shown

sufficiently that the combination of Ellis and Spivey teaches limitation 12.1 for purposes of institution. Also, we find that Petitioner provides sufficient rationale to combine the teachings of Ellis and Spivey for purposes of institution. *See* § IV.E.1.a.

> *e) Limitations 12.2 and 12.3 – "B) transmitting at least one instruction to the first client device to cause the first client device to request a first copy of a first stream of digital content relating to the first sporting event and receive the first copy via a first video communication channel between at least one media source and the first client device, wherein the first video communication channel is different than the first event information communication channel"*

Petitioner argues that the combination of Ellis and Spivey teaches limitation 12.2. Pet. 28–30 & n.7 (citing, *inter alia*, Ex. 1016 ¶¶ 44, 51–52; Ex. 1001 ¶ 176). Petitioner additionally argues that the "wherein" portion (limitation 12.3) is taught by Ellis in the Ellis/Spivey combination. Pet. 30–31 (citing Ex. 1016 ¶¶ 39–41, Fig. 1; Ex. 1001 ¶ 177.

Petitioner asserts that Ellis discloses transmitting an interactive sports watcher application that includes instructions that are executed by the client device. Pet. 29–30 (citing Ex. 1016 ¶¶ 44, 51–52; Ex. 1001 ¶ 176). Petitioner asserts that this necessarily requires the transmission of instructions to the client device at the outset of a connection. *Id.* at 30. With respect to limitation 12.3, Petitioner argues that Ellis discloses two different communications paths to the user equipment, including broadcast programming over a first path and sports scores and game summary information over a second path. *Id.* at 30–31 (citing Ex. 1006 ¶¶ 39–41, Fig. 1; Ex. 1001 ¶ 177).

Ellis discloses its sports watcher application may be transmitted to user equipment, and that the instructions of sports watcher applications are used in control circuitry 110, which controls tuners, encoders and decoders, and input/output circuitry. Ex. 1006 ¶ 44. Additionally, Ellis discloses two communications paths, one for broadcast programming and one for real-time sports scores and game summary information. *Id.* ¶ 41, Fig. 1.

Other than arguments addressed above, Patent Owner presents no additional arguments with respect to these limitations. Petitioner's contentions are supported by the cited portions of Ellis. On this preliminary record, we find that Petitioner has shown sufficiently for purposes of institution that Ellis and Spivey teaches or suggests limitations 12.2 and 12.3 of claim 12.

f) Conclusion – Claim 12

After consideration of the arguments and the evidence of record, we determine that Petitioner has shown sufficiently, for purposes of institution, that the combination of Ellis and Spivey teaches or suggests all recitations in claim 12. Also, we find that Petitioner provides sufficient rationale to combine the teachings of Ellis and Spivey for purposes of institution. *See* § IV.E.1.a.

Based on the record at this preliminary stage, we conclude that Petitioner has demonstrated a reasonable likelihood that it would prevail in showing that claim 12 is unpatentable under 35 U.S.C. § 103 as obvious over Ellis and Spivey.

2. Dependent Claims 13–15 – Obviousness over Ellis and Spivey (Ground 1A)

Claims 13–15 depend from claim 12, either directly or indirectly. Petitioner provides a detailed analysis in support of its position that the combination of Ellis and Spivey teaches or suggests the limitations in dependent claims 13–15. Pet. 31–34.

We have reviewed Petitioner's assertions and the evidence in support thereof. Patent Owner does not separately challenge Petitioner's analysis for the dependent claims. Based on the record at this preliminary stage, we conclude that Petitioner has demonstrated a reasonable likelihood that it would prevail in showing that claims 13–15 are unpatentable under 35 U.S.C. § 103 as obvious over Ellis and Spivey.

F. Asserted Obviousness over Ellis, Spivey, and Herzog (Ground 1B)

Petitioner asserts that claims 1–11 are unpatentable as obvious over Ellis, Spivey, and Herzog. Pet. 34–50. Petitioner provides a detailed analysis in support of its position that the combination of Ellis, Spivey, and Herzog teaches or suggests the limitations in claims 1–11. *Id.* Many of these repeat contentions discussed above, with respect to limitations of claim 12, in addition, Petitioner relies on some contentions with respect to Herzog that are substantially similar to contentions relating to the obviousness of claim 1 over Herzog and Spivey (Ground 2A), as summarized below.

We have reviewed Petitioner's assertions and the evidence in support thereof. Patent Owner relies on the same arguments discussed above in with respect to claim 12. Prelim. Resp. 60. Based on the record at this preliminary stage, we conclude that Petitioner has demonstrated a reasonable

likelihood that it would prevail in showing that claims 1–11 are unpatentable under 35 U.S.C. § 103 as obvious over Ellis, Spivey, and Herzog.

G. Asserted Obviousness over Herzog and Spivey (Ground 2A)

Petitioner asserts that claims 1–9 and 12–14 are unpatentable as obvious over Herzog and Spivey. Pet. 50–85. Patent Owner disputes Petitioner's showing. Prelim. Resp. 60–72.

1. Independent Claim 1 – Obviousness over Herzog and Spivey (Ground 2A)

a) Motivation to Combine

Petitioner proposes a modification of Herzog in which Spivey's MSQD is incorporated into Herzog's origin server. Pet. 52.

Petitioner makes arguments in support of its position that a person of ordinary skill in the art would have combined Herzog and Spivey, which are very similar to Petitioner's arguments made in support of its proposed combination of Ellis and Spivey. *Compare* Pet. 50–65, *with id.* at 19–24; *id.* at 53 ("A POSA would have been motivated to combine Herzog with Spivey for many of the same reasons that a POSA would have been motivated to combine Ellis with Spivey."). For example, Petitioner argues that its proposed combination would have improved latency issues in Herzog's system. *Id.* at 53. Petitioner also argues that Herzog and Spivey relate to the same subject matter, the references solve the same or similar problems, and Spivey provides a complementary solution to Herzog. *Id.* at 53–55. Petitioner argues that a person of ordinary skill in the art would have had a reasonable expectation of success for the same reasons. *Id.* at 54.

Patent Owner makes three arguments in support of its position that Petitioner has not shown that a person of ordinary skill in the art would have

made Petitioner's proposed combination. Prelim. Resp. 61–70. First, Patent Owner argues that Petitioner's proposed combination is inoperable and departs from the express teachings of Herzog. *Id.* at 61–64. Second, Patent Owner argues Petitioner's reasons do not "withstand scrutiny" in part because of differences in the reference teachings and because Petitioner does not show a person of ordinary skill in the art would have had a reasonable expectation of success. *Id.* at 64–67. Third, Patent Owner argues Petitioner relies on impermissible hindsight bias to "reconstruct the invention." *Id.* at 67–70.

We start with Petitioner's argument that its proposed combination would have been made to improve latency issues in Herzog's system. Pet. 52–54. Petitioner's argument is supported by the same disclosures in Spivey that were discussed with respect to Ground 1A. Patent Owner argues that Petitioner's proposed combination is inoperable and departs from the express teachings of Herzog because Herzog "needs the projected latency period to perform synchronization between audio/video data and the meta-data." Prelim. Resp. 63–64 (citing Ex. 1015 ¶¶ 74, 82; Ex. 2001 ¶¶ 277–281). Herzog describes that "live MPEG encoders may reach a latency that is greater than 32 seconds," "total latency in the video/audio data stream may be greater than 63 seconds," and "[t]he metadata, on the other hand, includes a latency that is less than a total of 2 seconds." Ex. 1015 ¶ 82.

Regarding Patent Owner's argument that Petitioner's proposed combination is inoperable, based on the record before us, we find that Petitioner has shown sufficiently that its proposed combination is operable. Petitioner's proposed combination incorporates Spivey's technology that improves latency. *See, e.g.*, Ex. 1017 ¶¶ 27–28 (cited at Pet. 53). Patent

Owner's argument and Dr. Rubin's supporting testimony are based on improved latency causing inoperability, but Herzog teaches compensating for different types of data having different latencies. Ex. 1015 ¶ 82. Even to the extent that the resulting combination would have required processing a faster meta-data stream, it is well-settled that a preferred combination or device is not required. *See, e.g., Novartis Pharm. Corp. v. West-Ward Pharm. Int'l Ltd.*, 923 F.3d 1051, 1059 (Fed. Cir. 2019) ("[O]ur case law does not require that a particular combination must be the preferred, or the most desirable, combination described in the prior art in order to provide motivation for the current invention."); *PAR Pharm., Inc. v. TWI Pharms., Inc.*, 773 F.3d 1186, 1197–98 (Fed. Cir. 2014) (holding that it is not necessary to show that a combination is "the best option, only that it be a *suitable* option"). Additionally, claim 1 requires only "first event information germane to a first live sporting event" and, preliminarily and on the present record, does not require that the first event information must be synchronized with the first live sporting event.

Relying on the testimony of Dr. Rubin, Patent Owner also argues that Petitioner's argument does not withstand scrutiny because "faster Herzog data . . . would not solve any video latency problem in Herzog because Herzog does not have a latency problem." Prelim. Resp. 65 (citing, e.g., Ex. 2001 ¶¶ 283–285). Petitioner's argument and Dr. Wicker's testimony rely on Spivey's disclosures to support Petitioner's argument that Herzog has latency issues. Pet. 53; Ex. 1001 ¶ 127 (citing Ex. 1017 ¶¶ 27–28). Spivey describes that "[a]s technology allows users to receive such data away from desktop computers, the demand for live event data *in real time* on mobile devices has increased." Ex. 1017 ¶ 2 (emphasis added). Spivey

describes that its technology reduces delay, "providing *a significant advantage over the conventional practices*." *Id.* ¶ 28 (emphasis added). On the present record, and for the purposes of institution, we find that Petitioner's argument of motivation to achieve reduced latency is supported sufficiently for purposes of institution based on Spivey's disclosure of user "demand" for "live event data in real time" and that Spivey's technology would have been understood to provide "*a significant advantage over the conventional practices*." *Id.* ¶¶ 2, 28 (emphasis added).

Additionally, on the present record, upon consideration of Petitioner's argument and Dr. Wicker's testimony, as well as Patent Owner's argument and Dr. Rubin's testimony, we find Petitioner has the better argument based on the preliminary record. We do not agree with Patent Owner's argument and Dr. Rubin's testimony that an alleged need to synchronize meta-data would undermine Petitioner's proposed combination. Herzog teaches synchronizing a faster meta-data stream. Ex. 1015 ¶ 82. Also, claim 1 does not recite expressly that the first event information must be synchronized with the first live sporting event.

Patent Owner's arguments and Dr. Rubin's testimony that Petitioner's reasons to combine Herzog and Spivey do not "withstand scrutiny" in part because of differences in the reference teachings (Prelim. Resp. 64–67) rely on characterizations of the references that appear to be contradicted by the reference teachings at this stage of the proceeding. Like Ellis and Spivey, Herzog provides content delivery for real-time events quickly to multiple users over the Internet. *See, e.g.*, Ex. 1015 ¶ 49 (describing publishing "video imagery, related audio and meta-data that are received from the content provider 42 onto the content delivery network 47 for presentation to

users/consumers of the content via mobile devices such as device 45"), ¶ 51 (describing that an "Internet server provider (ISP)" may transfer data to local content delivery network 47), Figs. 1, 4, 7. Patent Owner's arguments and Dr. Rubin's testimony do not take into account the teachings of the references as a whole, from the perspective of an ordinarily skilled artisan. *See Sundance*, 550 F.3d at 1361 n.3; *Hedges*, 783 F.2d at 1041.

Patent Owner's arguments that Petitioner relies on impermissible hindsight bias to "reconstruct the invention" (Prelim. Resp. 67–70) and Dr. Rubin's related testimony rely on an incorrect characterization of the Petition and the evidence in the preliminary record. As discussed above, Petitioner's arguments that a person of ordinary skill in the art would have made its proposed combination are sufficient for purposes of institution.

We find based on the preliminary record before us that Petitioner provides sufficient rationale to combine the teachings of Herzog and Spivey for purposes of institution. We also find that Petitioner has shown sufficiently for purposes of institution that a person of ordinary skill in the art would have had a reasonable expectation of success.

b) Objective Indicia of Non-Obviousness

Additionally, we do not accord substantial weight to Patent Owner's arguments relating to objective indicia of non-obviousness for the same reasons given with respect to Ground 1A. *See* § IV.E.1.b.

c) Element-By-Element Analysis

For the preamble of claim 1, Petitioner contends that Herzog's system provides video/audio streams, e.g., of a car race, to user devices over a communication network, along with "meta-data" regarding information

germane to the car race. Pet. 55–56 (citing Ex. 1015, code (57), ¶¶ 19, 45, 51, 70; Ex. 1001 ¶¶ 266–267).

For the control server of limitation 1.1, Petitioner contends that Herzog's ERP server retrieves information from the ERP generator server that generates meta-data. *Id.* at 57–58 (citing Ex. 1015 ¶¶ 13, 16, 17, 45, 47, 50, 85–86, Figs. 4, 8; Ex. 1001 ¶¶ 268–269).

For limitation 1.2.1, reciting a socket server communicatively coupled to the control server, which receives the first event information from the control server, Petitioner asserts that its proposed incorporation of Spivey's MSQD into Herzog's origin server teaches or suggests a socket server communicatively coupled to the control server, which would receive the meta-data from Herzog's ERP server. Pet. 58–62 (citing, *inter alia*, Ex. 1015 ¶¶ 48–52, Figs. 4, 6; Ex. 1017 ¶¶ 35, 36, 47, 52, 53, 55, Figs. 3, 4; Ex. 1001 ¶¶ 270–273). With respect to limitations 1.2.2 and 1.2.3, Petitioner argues that in its proposed combination, the combined system of Herzog and Spivey would have transmitted the first event information to client devices via the topic queues, when users access the topic queues in the MQSD using topic labels or Event IDs associated with a topic queue. *Id.* at 62–65 (citing, *inter alia*, Ex. 1015 ¶ 51; Ex. 1017, code (57), ¶¶ 35, 43, 47–51, 81–82, 179; Ex. 1001 ¶¶ 274–277). Petitioner argues that the webserver of limitation 1.3.1 is taught in Herzog's application server, which facilitates streaming between the origin server and client device after receiving a request from the client device, upon which it prompts the origin server to transmit the meta-data stream to a client device, using a protocol that would require an IP address to designate the location from which the client device would receive the content. *Id.* at 65–67 (citing, *inter alia*, Ex. 1015 ¶¶ 35, 51, 58, Fig 4.;

Ex. 1001 ¶¶ 278–279). Lastly, Petitioner contends that limitation 1.3.2 is taught by the URL and topic label or Event ID associated with and used to access Spivey's MQSD. *Id.* at 67–68 (citing Ex. 1017 ¶¶ 81–82, 179; Ex. 1001 ¶ 280).

In addition to Patent Owner's motivation to combine arguments, addressed above, Patent Owner asserts the same arguments regarding Spivey's "event socket" addressed with respect to Ground 1A. Prelim. Resp. 70. Additionally, Patent Owner argues that Herzog's meta-data does not teach or suggest "online gaming information." *Id.* at 70–72. However, on the present record and for the purposes of institution, telemetry data relating to the performance of cars and drivers in a race is encompassed in "online gaming information" under Patent Owner's definition (*see* Pet. 56 – 58; Ex. 1001 ¶¶ 267–268; Ex. 1015 ¶ 45 ("parameters regarding the status of each car and driver in the race").

We determine, on the present record, that Petitioner's contentions as summarized above sufficiently show that each element of claim 1 is taught or suggested by Petitioner's proposed combination of Herzog and Spivey, in which Spivey's MSQD is incorporated into Herzog's origin server.

d) Conclusion—Claim 1 (Ground 2A)

After consideration of the arguments and the evidence of record, we determine that Petitioner has shown sufficiently, for purposes of institution, that the combination of Herzog and Spivey teaches or suggests all recitations in claim 1, and that Petitioner provides sufficient rationale to combine the teachings of Herzog and Spivey.

Based on the record at this preliminary stage, we conclude that Petitioner has demonstrated a reasonable likelihood that it would prevail in

showing that claim 1 is unpatentable under 35 U.S.C. § 103 as obvious over Herzog and Spivey.

2. Independent Claim 12 and Dependent Claims 2–9, 13, and 14 – Obviousness over Herzog and Spivey (Ground 2A)

Petitioner asserts that independent claim 12 is unpatentable over Herzog and Spivey and includes largely the same reasoning as provided with respect to claim 1. Pet. 73–76. Additionally, Petitioner asserts that claims 2–9, 13, and 14 are unpatentable as obvious over Herzog and Spivey, and provides a detailed analysis in support of its position that the combination of Herzog and Spivey teaches or suggests the limitations in these dependent claims. Pet. 68–73, 76–77.

We have reviewed Petitioner's assertions and the evidence in support thereof. Patent Owner relies on the same arguments discussed above in Section IV.G.1 with respect to claim 1. Prelim. Resp. 60–73. Based on the record at this preliminary stage, we conclude that Petitioner has demonstrated a reasonable likelihood that it would prevail in showing that claims 1–9, 13, and 14 are unpatentable under 35 U.S.C. § 103 as obvious over Herzog and Spivey.

H. Asserted Obviousness over Herzog, Spivey, and Ellis (Ground 2B)

Petitioner asserts that claims 10, 11, and 15 are unpatentable as obvious over Herzog, Spivey, and Ellis. Pet. 77–82. Petitioner provides a detailed analysis in support of its position that the combination Herzog, Spivey, and Ellis teaches or suggests the limitations in dependent claims 10, 11, and 15. *Id.*

We have reviewed Petitioner's assertions and the evidence in support thereof. Patent Owner relies on the same arguments discussed above in with respect to Ground 2A. Prelim. Resp. 73.

Based on the record at this preliminary stage, we conclude that Petitioner has demonstrated a reasonable likelihood that it would prevail in showing that claims 10, 11, and 15 are unpatentable under 35 U.S.C. § 103 as obvious over Herzog, Spivey, and Ellis.

V. CONCLUSION

For the foregoing reasons, we determine that Petitioner has demonstrated that there is a reasonable likelihood that it would prevail in proving the unpatentability of at least one of the challenged claims of the '218 patent. We thus institute an *inter partes* review of all of the challenged claims of the '218 patent on all grounds asserted in the Petition. *See* 37 C.F.R. § 42.108(a).

Any findings or conclusions in this Decision are made only for the purposes of institution and are not dispositive of any issue. We have not made a final determination with respect to the patentability of any challenged claim. Our final determination will be based on the record as fully developed during trial, including any evidence or argument timely presented by the parties under our Rules.

VI. ORDER

In consideration of the foregoing, it is hereby:

ORDERED that *inter partes* review of claims 1–15 of the '218 patent is hereby instituted on all grounds stated in the Petition; and

FURTHER ORDERED that pursuant to 35 U.S.C. § 314(c) and 37 C.F.R. § 42.4, notice is hereby given of the institution of a trial; the trial will commence on the entry date of this decision.

For PETITIONER:

W. Todd Baker
Michael Dinnella
KIRKLAND & ELLIS LLP
todd.baker@kirkland.com
mtd5145@gmail.com

For PATENT OWNER:

Brian Eutermoser
Mikaela Stone
KING & SPALDING LLP
beutermoser@kslaw.com
mikaela.stone@kslaw.com