UNITED STATES PATENT AND TRADEMARK OFFICE

BEFORE THE PATENT TRIAL AND APPEAL BOARD

Genius Sports Ltd.
Petitioner

v.

SportsCastr Inc. (d/b/a Panda Interactive)
Patent Owner

U.S. Patent Nos. 10,425,697; 10,805,687; and 11,039,218

Case No. 2:23-cv-00471-JRG

DECLARATION OF DR. STEPHEN B. WICKER UNDER C.F.R. 1.68 IN SUPPORT OF PETITIONS FOR *INTER PARTES* REVIEW OF U.S. PATENT NOS. 10,425,697; 10,805,687; AND 11,039,218

TABLE OF CONTENTS

Page

I. Introduction 1

II. Qualifications and Background 2

A. Education Background and Career History 2

B. Publications and Patents 4

C. Other Relevant Qualifications 5

D. Prior Testimony 6

III. Understanding of Patent Law 7

IV. Description of the Technology 11

A. Internet Communications in General 11

B. Network Communication Models 16

C. Protocols for Real-time or Low-latency Data Transmission 18

1. Real-Time Transport Protocol (RTP) 18

2. HTTP Polling 18

3. WebSocket 19

4. Stream Control Transmission Protocol (SCTP) 20

5. Real-Time Messaging Protocol (RTMP) 20

6. Web Real-Time Communication (WebRTC) 21

7. Dynamic Adaptive Streaming Over HTTP ("DASH" or "MPEG-DASH") / HTTP Live Streaming (HLS) 22

D. Internet Live Video Streaming 23

V. Overview of the Challenged Patents 24

A. Alleged Problem in the Art 24

B. Alleged Invention of the Challenged Patents 25

VI. Level of Ordinary Skill in the Art 30

VII. Claim Construction 31

A. The ’687, ’697, and ’218 Patent 31

VIII. Summary of the Prior Art 35

A. U.S. Patent Pub. No. 2015/0163379 (“Herzog”) 35

B. U.S. Patent Pub. No. 2014/0229992 (“Ellis”) 40

C. U.S. Patent Pub. No. 2016/0036910 (“Spivey”) 43

IX. A POSA’s Motivation To Combine Prior Art References with a Reasonable Expectation of Success 49

A. Ellis in View of Spivey 49

1. Socket Server (*Spivey*) 49

B. Ellis in View of Spivey and Herzog 56

1. Webserver (*Herzog*) 56

2. Multiple live streams from one sporting event (*Herzog*) 59

C. Herzog in View of Spivey 62

1. Socket server (*Spivey*) 62

D. Herzog in View of Ellis 66

1. Real-time information stream (*Ellis*) 66

2. Interactive content (*Ellis*) 69

E. Herzog in View of Spivey and Ellis 71

1. Socket Server (*Spivey*) 71

2. Real-time information stream (*Ellis*) 74

3. Multiple live events (*Ellis*).....77

X. Grounds 84

A. The ’218.....86

1. ’218 Ground 1A: Claims 12-30 Are Obvious Over Ellis in View of Spivey 86

2. ’218 Ground 1B: Claims 1-11 Are Obvious Over Ellis in View of Spivey and Herzog.....128

3. ’218 Ground 2A: Claims 21-22 and 27-28 Are Anticipated by Herzog 144

4. ’218 Ground 2B: Claims 1-9, 12-14, 16-20, 23-24, and 29 Are Obvious Over Herzog in View of Spivey.....154

5. ’218 Ground 2C: Claims 25-26 and 30 Are Obvious Over Herzog in View of Ellis 190

6. ’218 Ground 2D: Claims 10-11 and 15 Are Obvious Over Herzog in View of Spivey and Ellis 194

B. The ’687.....198

1. ’687 Ground 1A: Claims 1, 8-9, 19-25, 27-30 Are Obvious Over Ellis in View of Spivey 198

2. ’687 Ground 1B: Claims 2-7 Are Obvious Over Ellis in View of Spivey and Herzog.....255

3. ’687 Ground 2: Claims 1-9, 19-25, 27-30 Are Obvious Over Herzog in View of Spivey and Ellis 271

C. The ’697.....331

1. ’697 Ground 1A: Claims 1, 7-9, 19-25, 27-30 Are Obvious Over Ellis in View of Spivey 331

2. ’697 Ground 1B: Claims 2-6 are Obvious over Ellis in View of Spivey and Herzog.....407

3. ’697 Ground 2: Claims 1-9, 19-25, 27-30 Are Obvious Over Herzog in View of Spivey and Ellis 420

XI. Secondary Considerations of Non-Obviousness 488

XII. Conclusion 489

TABLE OF EXHIBITS[1]

Exhibit No.	Description
Exhibit 1001	Declaration of Dr. Stephen Wicker, Ph.D., (*i.e.*, this declaration)
Exhibit 1002	*Curriculum Vitae* of Dr. Stephen Wicker, Ph.D.
Exhibit 1003	U.S. Patent No. 10,805,687
Exhibit 1004	Claim Listing of U.S. Patent No. 10,805,687
Exhibit 1005	Certified File History of U.S. Patent No. 10,805,687
Exhibit 1006	U.S. Patent No. 10,425,697
Exhibit 1007	Claim Listing of U.S. Patent No. 10,425,697
Exhibit 1008	Certified File History of U.S. Patent No. 10,425,697
Exhibit 1009	U.S. Patent No. 11,039,218
Exhibit 1010	Claim Listing of U.S. Patent No. 11,039,218
Exhibit 1011	Certified File History of U.S. Patent No. 11,039,218
Exhibit 1012	U.S. Patent No. 11,871,088
Exhibit 1013	Director Vidal Memorandum re: *Sotera* Stipulations
Exhibit 1014	SportsCastr's Complaint for Patent Infringement against Genius Sports
Exhibit 1015	U.S. Patent Pub. No. 2015/0163379 ("Herzog")
Exhibit 1016	U.S. Patent Pub. No. 2014/0229992 ("Ellis")

[1] Unless otherwise specified, citations are to the original page, column, and line numbers in exhibits. Brackets ([]) are used to refer to the sequential page numbers added to exhibits pursuant to 37 C.F.R. §42.63(d)(2)(i).

Exhibit 1017	U.S. Patent Pub. No. 2016/0036910 ("Spivey")
Exhibit 1018	U.S. Patent Pub. No. 2015/0163379 ("Mitic")
Exhibit 1019	SportsCastr's Preliminary Infringement Contentions
Exhibit 1020	SportsCastr's Response to Genius Sports' First Set of Interrogatories
Exhibit 1021	Genius Sports' proposed *Sotera* Stipulation to SportsCastr
Exhibit 1022	James F. Kurose & Keith W. Ross, *Application Layer*, in Computer Networking A Top-Down Approach (Michael Hirsch et al. eds., 4th ed. 2012) ("Kurose")
Exhibit 1023	John Dilley et al., *Globally Distributed Content Delivery*, IEEE Internet Computing (Sept.–Oct. 2002).
Exhibit 1024	Mário Marques da Silva, Multimedia Communications and Networking (2012) ("Silva")
Exhibit 1025	*A Brief History of the Internet*, ONLINE LIB. LEARNING CENTER. (Feb. 9, 2024), https://www.usg.edu/galileo/skills/unit07/internet07_02.phtml ("Online Library")
Exhibit 1026	Hisayuuki Ohmata et al., *Hybridcast: A new media experience by integration of broadcasting and broadband*, 2013 ITU Kaleidoscope: Building Sustainable Communities, April 2013 ("Ohmata")
Exhibit 1027	Henning Schulzrinne et al., *RTP: A Transport Protocol for Real-Time-Applications*, DataTracker (January 1996), https://datatracker.ietf.org/doc/html/rfc1889 ("Schulzrinne")
Exhibit 1028	Brijesh Kumar, *Making Sense of Video Streaming Protocols*, LinkedIn. (Aug. 11, 2016), https://www.linkedin.com/pulse/making-sense-video-streaming-protocols-dr-brijesh-kumar/ ("Kumar")
Exhibit 1029	Ian Fette & Alexey Melnikov, *The WebSocket Protocol*, RFC Editor. (Dec. 2016), https://www.rfc-editor.org/rfc/rfc6455.html.

Exhibit 1030	Marcin Warczygłowa, *Real-time Web Application with Websockets and Vert.X* (Nov. 10, 2015), https://blog.allegro.tech/2015/11/real-time-web-application-with-websockets-and-vert-x.html.
Exhibit 1031	Randall Stewart & Chris Metz, *SCTP: new transport protocol for TCP/IP*, 5 IEEE 64, (2001) ("Stewart")
Exhibit 1032	Lydon Ong, John Yoakum &, *An Introduction to the Stream Control Transmission Protocol (SCTP)*, Datatracker. (May. 2002), https://datatracker.ietf.org/doc/rfc3286/ ("Ong")
Exhibit 1033	Jan Newmarch, *Introduction to Stream Control Transmission Protocol*, LINUX J. (Sep. 1, 2007), https://www.linuxjournal.com/article/9748 ("Newmarch")
Exhibit 1034	Kyung-Hoe Kim et al, *A transmission control SCTP for real-time multimedia streaming*, 54 Computer Networks 1418, (2010) ("Kim")
Exhibit 1035	High Scalability, *How Facebook Live Streams to 800,000 Simultaneous Viewers*, ByteByteGo (Jun. 27, 2016), https://blog.bytebytego.com/?utm_source=hs&utm_medium=ann&utm_campaign=top ("ByteGo")
Exhibit 1036	Hardeep Singh Parmar & Michael C. Thornburgh, *Adobe's Real Time Messaging Protocol*, Veriskope. (Dec. 21, 2002) ("Parmer")
Exhibit 1037	Ilya Grigorik, *WebRTC*, in High Performance Browser Networking, (2013) ("Grigorik")
Exhibit 1038	Sam Dutton, *Get started with WebRTC*, web.dev. (Jul. 23, 2012), https://web.dev/articles/webrtc-basics ("Dutton")
Exhibit 1039	Andy Salo, *MPEG DASH: A Technical Deep Dive and Look at What's Next*, RGB Networks, (2012) ("Salo")
Exhibit 1040	Jan Ozer, *Upstream, Justin.tv, Livestream, and Bambuser: Streaming Unplugged*, Streaming Media Magazine., Jun.–Jul. 2012 ("Ozer")
Exhibit 1041	Christopher Mueller, *MEPG-DASH vs. Apple HLS vs. Microsoft Smooth Streaming vs. Adobe HDS*, BITMOVIN. (Mar. 29, 2015), https://bitmovin.com/mpeg-dash-vs-apple-hls-vs-microsoft-smooth-streaming-vs-adobe-hds/ ("Mueller")

Exhibit 1042	Stefan Saroiu et al., *An analysis of Internet Content Delivery Systems*, ACM SIGOPS Operating System Review, Vol. 36 (Dec. 31, 2002), https://doi.org/10.1145/844128.84415 ("Saroiu")
Exhibit 1043	Charles Marion & Julien Jomier, *Real-time Collaborative Scientific WebGL Visualization with Websocket*, Ass'n Computing Machinery, August 4-5, 2012 ("Marion")
Exhibit 1044	Mark Sweney, *First ads appear on YouTube Clips*, The Guardian, Aug. 22, 2007 ("Sweney")
Exhibit 1045	Richard Sandomir, *The Innovation That Grew and Grew*, N.Y. Times, June 12, 2014 ("Sandomir")
Exhibit 1046	Victoria Pimentel & Bradford G. Nickerson, *Communicating and Displaying Real-Time Data with WebSocket*, 16 IEEE (2012) ("Pimentel")
Exhibit 1047	Lucian Popa et al., *HTTP as the narrow waist of the future internet*, 2010 ACM SIGCOMM Workshop, October 2013 ("Popa")

Ex. 1001 - Declaration of Stephen B. Wicker, Ph.D.

I, Dr. Stephen B. Wicker, declare as follows:

I. INTRODUCTION

1. My name is Stephen B. Wicker, Ph.D. I am Professor Emeritus of Electrical and Computer Engineering at Cornell University in Ithaca, New York. I have been retained on behalf of Genius Sports Ltd. to provide my opinions regarding whether claims 1-9, 19-25, and 27-30 of U.S. Patent No. 10,805,687 ("the '687 patent"); claims 1-9, 19-25, 27-30 of U.S. Patent No. 10,425,697 ("the '697 patent"); and claims 1-30 of U.S. Patent No. 11,039,218 ("the '218 patent") would have been invalid to one of ordinary skill in the art as of August 5, 2016 in the above-captioned Petitions for *Inter Partes* Review ("IPR") of the '687, '697, and '218 patents.

2. For time spent in connection with this matter, I will be compensated at my standard billing rate of $900 per hour. I am being separately reimbursed for any out-of-pocket expenses. My compensation does not depend on the content of my opinions or the outcome of this case.

3. In forming the opinions expressed in this Declaration, I have also relied on my academic and professional experience. I also considered the viewpoint of a person having ordinary skill in the art as of the time of alleged invention of the '687, '697, and '218 patents. My opinions are based, at least in part, on the following:

- U.S. Patent No. 10,805,687 ("the '687 Patent") (Ex. 1003)
- U.S. Patent No. 10,425,697 ("the '697 patent") (Ex. 1006)

- U.S. Patent No. 11,039,218 ("the '218 Patent") (Ex. 1009)
- U.S. Patent No. 10,805,687 Certified File History (Ex. 1005)
- U.S. Patent No. 10,425,697 Certified File History (Ex. 1008)
- U.S. Patent No. 11,039,218 Certified File History (Ex. 1011)
- U.S. Patent Pub. No. 2015/0163379 ("Herzog") (Ex. 1015)
- U.S. Patent Pub. No. 2014/0229992 ("Ellis") (Ex. 1016)
- U.S. Patent Pub. No. 2016/0036910 ("Spivey") (Ex. 1017)

II. QUALIFICATIONS AND BACKGROUND

A. Education Background and Career History

4. My *curriculum vitae* is attached hereto as Exhibit 1002. It provides an accurate identification of my background and experience.

5. I earned my Bachelor of Science degree in Electrical Engineering from the University of Virginia in 1982. In 1983, I earned a Master of Science degree in Electrical Engineering from Purdue University, and in 1987, I earned a Ph.D. in Electrical Engineering from the University of Southern California. My doctoral studies focused on the theory of sequences and error control codes for digital communication systems.

6. In 1982-1983, I worked for the Network Architecture Research Group of Bell Laboratories, in Columbus, Ohio. While with Bell Laboratories, I worked on digital switching systems for the messages that control the telephone network.

7. From August 1983 through September 1987, I was a System Engineer for the Space and Communications Group of the Hughes Aircraft Company, in El Segundo, California. During this time my primary focus was on the design and development of communication payloads for commercial, military, and NASA spacecraft. My work at Hughes included acting as the Principal System Engineer for new business in advanced satellite systems.

8. From September 1987 through June 1996, I was a member of the faculty of the School of Electrical and Computer Engineering at Georgia Tech.

9. From July 1, 1996, to February 29, 2024, I was a member of the faculty of the School of Electrical and Computer Engineering at Cornell University, where I taught and conducted research in wired and wireless information networks, digital telephony, information theory, and security. Since that time, I have continued to serve Cornell as an Emeritus faculty member, conducting research, advising students and faculty, and giving occasional lectures. Over my time at Georgia Tech and Cornell, I have supervised forty-four Ph.D. students.

10. I have consulted extensively with Motorola, MTel, Lockheed, Integrated Device Technologies, Unisys, Texas Instruments, and other corporations to develop advanced technologies for their products.

11. My current research focuses on wireless and wired information networks, with an emphasis on network security and privacy. I have been

particularly focused on client-facing systems such as cellular technology and content distribution networks. I am particularly interested in the security and privacy issues that arise in streaming systems.

B. Publications and Patents

12. I have written and/or edited six books and roughly 250 journal and conference papers, most of which focus on digital communication systems and information networks. I am the author of *Cellular Convergence and the Death of* Privacy (Oxford University Press, 2013). I am also the author of *Error Control Systems for Digital Communications and Storage* (Prentice Hall, 1995), which has been adopted as a text for courses in over sixty universities in fourteen countries. I am the author of *Reed-Solomon Codes and Their Applications*, published in 1994 by the IEEE Press; *Turbo Coding*, published in November 1998 by Kluwer Academic Press; and *Fundamentals of Codes, Graphs, and Iterative Decoding*, published in 2002 by Kluwer Academic Press.

13. My journal publications include "Ad Blockers: Technology, Ethics, and a Serious Difference of Opinion," *Communications of the ACM*, October 2017 (with K. Karlsson) and "Digital rights management: The cost to consumers," in *Proceedings of the IEEE*, vol.103, no.5, pp.726-33, May 2015 (with A. S. Kubesch).

14. I have also contributed chapters to several books, including "Privacy-Aware Design for the Monitoring, Control, and Protection of Critical Infrastructure,"

in *Homeland Security Threats, Countermeasures, and Privacy Issues* (ed. Giorgio Franceschetti), Artech House, 2010. A complete list of my publications is contained in my curriculum vitae, a copy of which is provided as Ex.1002 to the Petition.

15. I am a named inventor on the following patents.

- Wicker, S.B., "*Private Overlay for Information Networks*", U.S. Patent No. 9,813,233, 7 November, 2017 - assigned to Cornell University.

- Ober, C.K., O'Rourke, T.D., Spencer, M.G., Turner, J.N., Wicker, S.B., "*Flexible Substrate Sensor System For Environmental And Infrastructure Monitoring*", U.S. Patent No. 8,701,469, 22 April 2014 - assigned to Cornell University.

- Fontaine, F. and Wicker, S.B., "*Method and Apparatus for Turbo Decoding Block Codes*", U.S. Patent 7,243,288, 10 July 2007 - assigned to Motorola Inc.

- Wicker, S.B. and Fine, T.L., "*Sensor-Assisted ALOHA Multiple Access*", U.S. Patent No. 6,404,750, 11 June 2002 - assigned to Cornell University.

- Wang, X.A. and Wicker, S. B., "*Artificial Neural Network Viterbi Decoding System and Method*," U.S. Patent No. 5,548,684, 20 August, 1996 - assigned to Georgia Tech Research Corporation.

C. Other Relevant Qualifications

16. I have served as an Associate Editor for the *IEEE Transactions on Communications* and the *ACM Transactions on Sensor Networks*. I was twice elected to the Board of Governors of the IEEE Information Theory Society. I have also edited several special issues for a variety of journals and technical magazines, and served a three-year term on the Information Science and Technology Panel for the Defense Advanced Research Projects Agency (DARPA). The DARPA panel is

responsible for technology assessment for the U.S. Department of Defense. My DARPA duties included leading a one-year study on wireless sensor networks.

17. In 2011, I was named a Fellow of the IEEE for contributions to wireless information systems. From 2005 to 2018, I served as the Cornell University Principal Investigator for the TRUST Science and Technology Center - a National Science Foundation center dedicated to the development of technologies for securing the nation's critical infrastructure.

18. In 2014, I briefed the staff of the National Economic Council at the White House on the subject of privacy aware designs for cellular and the smart grid.

19. I have taught communication system theory and design to thousands of students at Georgia Tech and Cornell over the past thirty-seven years. I have been the recipient of four Cornell University College of Engineering faculty teaching awards.

D. Prior Testimony

20. The cases in which I have testified as an expert at trial or by deposition within the preceding five-plus years are as follows:

- Wireless Alliance v AT&T et al. (for the defendants)
- Touchstream v. Charter (for the plaintiff)
- SEVEN Networks v. Motorola Mobility (for the defendant)
- Ax Wireless v Lenovo and Dell (for the defendants)
- Identity Security v. Apple (for the defendant)
- Netgear v. TP-Link (for the claimant, ITC)
- Acceleration Bay v Activision (for the defendant)
- State Farm v. Amazon (for the plaintiff)

- GComm v. Samsung (for the defendant)
- Unisys v. Atos et al. (for the plaintiff)
- Alacritech v. Intel et al. (for the defendants)
- University of Minnesota v. Ericsson and Nokia (for the defendants)
- Viasat v. Adobe (for the defendant)
- KPN v Ericsson (for the defendant)
- TQ Delta v DISH (for the defendant)
- AMO Development v. Alcon Vision, LLC (for the defendant)
- Sonrai v. Samsung et al (for the defendants)
- IPCom v AT&T et al (for the defendants)
- Teradyne v. Astronics (for the defendant)
- Huawei v. Verizon (for the defendant)
- Google v. Sonos (for the defendant)
- Barkan v. Sprint et al. (for the defendants)
- Gigamon v. Apcon (for the defendant)
- Impact Engine v. Google (for the plaintiff)
- Sprint v. Altice et al. (for the plaintiff)
- KAIFI v. AT&T (for the defendant)
- Sprint v. Charter et al. (for the plaintiff)
- Live Person v. 24/7 (for the plaintiff)
- Motorola v. Hytera (for the plaintiff)

III. UNDERSTANDING OF PATENT LAW

21. I understand that prior art to the ’687, ’697, and ’218 patents includes patents in the relevant art that predate the priority date of the ’687, ’697, and ’218 patents.

22. I understand that claims in an IPR are construed under the case *Phillips v. AWH Corp.*, 415 F.3d 1303, decided by the Federal Circuit in 2005. I understand that under the rule in *Phillips*, words of claims are given their plain and ordinary meaning as understood by a person of ordinary skill in the art in view of the specification and prosecution history, unless those sources show an intent to depart

from such meaning. No terms need to be construed for the purposes of this declaration. I reserve the right to respond to any constructions offered by the Patent Owner or adopted by the Board.

23. I further understand from counsel that inventors may draft their claims as a means or step for performing a specified function, but that they must also disclose in the specification the structure that performs the function, or that claim is indefinite. I also understand that construing a means-plus-function claim requires identifying the claimed function and determining what structure, if any, disclosed in the specification corresponds to the claimed function. I further understand that a term with a computer-implemented function must have a clearly linked structure in the form of an algorithm. I understand that if I cannot identify such an algorithm, the term lacks a clearly linked structure and is therefore indefinite. I further understand that a general purpose computer cannot be the structure for a computer-implemented function because this amounts to purely functional claiming.

24. I understand that in IPR a claim is unpatentable if it is anticipated or obvious. Anticipation of a claim requires that every element of a claim be disclosed expressly or inherently in a single prior art reference, arranged in the prior art reference as arranged in the claim. An element is inherent if it is necessarily present in the reference.

25. It is my understanding that a patent claim is unpatentable for obviousness if the claimed invention would have been obvious at the time the invention was made to a person having ordinary skill in the art (POSA).

26. I understand that the following factors are considered: (1) the scope and content of the prior art; (2) the differences between the art and the claims at issue; (3) the level of ordinary skill in the art at the time the invention of the asserted patent was made; and (4) objective evidence of nonobviousness. In order to determine whether claim elements are found in the prior art, it is necessary to compare the properly construed claim language of the patent with the teachings of the prior art.

27. I understand that certain factors—often called "secondary considerations"—may support or rebut an assertion of obviousness of a claim. I understand that such secondary considerations include, among other things, commercial success of the alleged invention, skepticism of those having ordinary skill in the art at the time of the alleged invention, unexpected results of the alleged invention, any long-felt but unsolved need in the art that was satisfied by the alleged invention, the failure of others to make the alleged invention, praise of the alleged invention by those having ordinary skill in the art, and copying of the alleged invention by others in the field. I further understand that there must be a nexus—a connection—between any such secondary considerations and the alleged invention.

28. I further understand that a claim can be found obvious if it unites old elements with no change to their respective functions or alters prior art by mere substitution of one element for another known in the field, with that combination yielding predictable results. While it may be helpful to identify a reason for this combination, common sense should guide, and there is no rigid requirement for a teaching, suggestion, or motivation to combine. When a product is available, design incentives and other market forces can prompt variations of it, either in the same field or different one. If a person having ordinary skill in the relevant art can implement a predictable variation, obviousness likely bars patentability. Similarly, if a technique has been used to improve one device, and a person having ordinary skill in the art would recognize that the technique would improve similar devices in the same way, use of the technique is obvious. I further understand that a claim may be obvious if common sense directs one to combine multiple prior art references or add missing features to reproduce the alleged invention recited in the claims.

29. I also understand the following rationale may support a finding of obviousness:

a. Combining prior art elements according to known methods to yield predictable results;

b. Simple substitution of one known element for another to obtain predictable results;

c. User of known technique to improve similar devices (methods, or products) in the same way;

d. Applying a known technique to a known device (method, or product) ready for improvement to yield predictable results;

e. "Obvious to try" — choosing from a finite number of identified, predictable solutions, with a reasonable expectation of success;

f. Known work in one field of endeavor may prompt variations of it for use in either the same field or a different on based on design incentives or other market forces if the variations are predictable to one of ordinary skill in the art;

g. Some teaching, suggestion, or motivation in the prior art that would have led one of ordinary skill to modify the prior art reference or to combine prior art reference teachings to arrive at the claimed invention.

30. I also understand that it is impermissible to use the claimed invention itself as a blueprint for piecing together elements in the art. In other words, it is impermissible to use hindsight reconstruction to pick and choose among disclosures in the prior art to reconstruct the claimed invention.

IV. DESCRIPTION OF THE TECHNOLOGY

A. Internet Communications in General

31. The Internet allows devices, such as servers, smartphones, and tablets, to communicate by exchanging digital information in the form of packets across a global system of interconnected computer networks. To exchange information reliably and effectively, each device and network must use a standard set of rules, messages, and messaging formats, known as communication "protocols." Ex.1024, 23, 417.

32. The term "Internet" is a contraction of the phrase "interconnected network". The Internet is not one network, but is instead many interconnected networks. It consists of many groups of networks, including the following examples, interconnected at network access points.

- Backbones (*e.g.*, AT&T, Verizon, and Sprint)
- Regional Networks
- Local Networks (*e.g.*, Cornell computer network)

33. The first piece of the Internet was *ARPANET*. It was built by DARPA in the late 1960's to interconnect research centers, military bases, and government locations of various types. The Defense Communication Agency (DCA) converted ARPANET into a research tool in 1975. ARPANET was split into MILNET (for military bases) and ARPANET (for research centers) in 1983.

34. One of the primary foci of the ARPANET research was the development of interconnection protocols. The first milestone in this area was the

Network Control Program (NCP - 1969). As a monolithic program, it exhibited scalability problems as the Internet evolved. In the 1970s, NCP was broken up into TCP (the Transmission Control Protocol) and IP (the Internet Protocol). This was the beginning of the suite of protocols that we now referred to as TCP/IP.

35. In 1983 DARPA insisted that all computers wanting to connect to ARPANET use TCP/IP. This was a critical step, as it allowed for different computer technologies to share the Internet.

36. ARPANET was eventually replaced by NSFNET, in part to reflect the increasing prominence of academic research. In 1986, the National Science Foundation (NSF) built a backbone network to interconnect four NSF-funded regional supercomputer centers and the National Center for Atmospheric Research (NCAR). The original architecture consisted of

- backbone
- mid-level networks (regional, discipline-based, and supercomputer consortia)
- campus networks

37. It is important to note that NSFNET traffic was limited to non-commercial use.

38. The first backbone used 56 Kbps leased lines. The second backbone, developed by NSF, Merit, IBM, and MCI and installed in 1988, used 448 Kbps leased circuits to interconnect 13 nodal switching centers. The third backbone

(1989) began using T1 lines (primarily fiber optic), and has since migrated to T3 (45 Mbps - 1992).

39. The migration to gigabit speeds was fueled in part by a surge in commercial activities that began in April 1995, when the U.S. Government stopped its funding of NSFNET and allowed the presence of commercial activity.

40. The Internet communication technologies used today are based on protocols developed decades ago including the transmission control protocol (TCP) and internet protocol (IP), the more prominent members of the "TCP/IP" protocol suite (a suite that actually includes dozens of protocols). *See* Ex.1025; Ex.1024, 37.

41. TCP/IP aimed to ensure reliable, low-latency, end-to-end data transmission between network-connected devices by dividing transmissions into "packets" and specifying rules for transmitting, routing, and receiving packetized messages. *See* Ex.1024, 39, 261. Latency, as it relates to live streaming, is the time delay between when an event occurs and when the distributed content related to that event, e.g., video, audio, or other data, is displayed on a user device. *See, e.g.*, Ex.1003, 2:31-40 ("'[L]atency,' *i.e.*, the delay between a first user generating a live video stream for transmission via the Internet and a second user receiving a copy of the live video stream via the Internet for viewing.").

42. Implementation of TCP/IP communications in operating system software often relies on an application programming interface (API). *See* Ex.1026,

5. APIs expose functions that allow applications to exchange information over the Internet while handling the low-level details of encapsulation, formatting, transmitting, and receiving TCP segments and IP packets. By leveraging APIs, developers can build networked applications that operate on underlying network infrastructure without the need for a sophisticated understanding of lower-level implementation details, which are managed by the "protocol stack" within the operating system. *See* Ex.1024, 377.

43. Generally speaking, packets from higher layer protocols are placed in the information fields of the next lower-layer packets. This process, called "encapsulation," is depicted below.

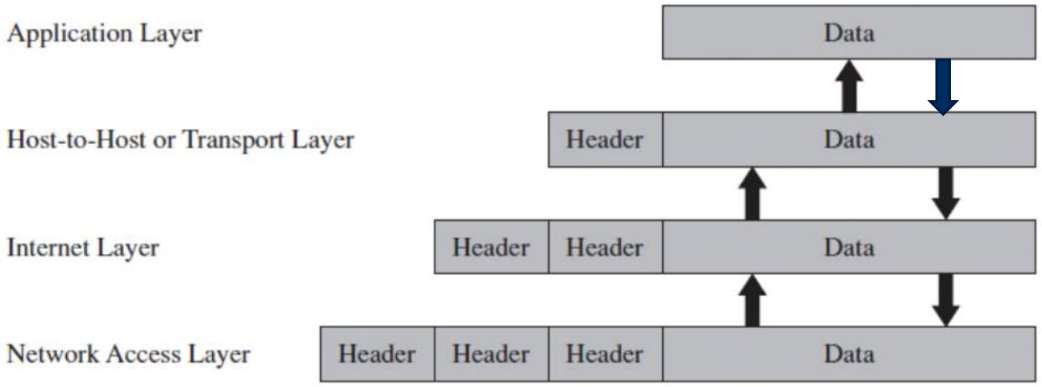

44. To access this stack structure, APIs for TCP/IP communication generally rely on abstractions such as "ports" and "sockets". Ex.1024, 378. A port

is a number that is assigned to uniquely identify a connection endpoint and associate the connection with a specific process or service in the host software. *Id*. For example, port 80 is uniformly used to represent Hypertext Transfer Protocol (HTTP) connections used on the World Wide Web to serve webpages. *See id*. Sockets are software structures that represent the connection for sending and receiving data across the network. *Id.*

45. An application designed to exchange data over the Internet (*e.g.*, a web browser) will first open a socket with a specific IP address and transport layer port in order to establish a connection with a remote endpoint. *See id.*, 378-379. The application may then read and write to the opened socket using API functions that implement the low-level details of the TCP/IP protocol required to exchange data over the network. *See id.*, 333-335. APIs for establishing and communicating using sockets were developed as early as 1983 with the "Berkeley sockets" API, part of version 4.2 of the BSD Unix operating system. Modern operating systems continue to implement similar APIs based on the Berkeley socket interface.

B. Network Communication Models

46. Communications involving multiple hosts, each with multiple ports (and thus multiple sockets) may take on various topologies, which characterize the relationships between the hosts and/or ports involved in a connection. Ex.1024, 12-15. Possible connection topologies include one-to-one, one-to-many, and many-to-

many. *See id.*, 12-15, 270. A one-to-one connection topology exists when only one source host and one destination host are involved. There, the communication is between one source socket (representing the source host's IP address and port number) and one destination socket (representing the destination host's IP address and port number). *Id.*, 392-395. When multiple destination hosts wish to receive information from the same source host, the connection topology may be one-to-many or many-to-many. *See id.*, 12-15.

47. In a one-to-many topology, the communication may be from the same source socket at the source host to multiple destination sockets (one at each destination host). *See id.*, 1024, 12-15. A web server is a common example, where all users connect to the same socket (using port 80). *See id.*, 378, 435. Content Distribution Networks (CDNs) are another prominent example in which many destinations may be observing the same video event, such as the Olympics. Alternatively, the network topology may be many-to-many, where multiple source sockets are available to transmit information to multiple n sockets. *See id.*, 12-15, 242. In this topology, each destination socket may be assigned its own unique source socket, or multiple destination sockets may share a source socket, with different sets of destination sockets sharing different source sockets. *See id.*, 270.

48. Various protocols have been developed to accomplish one-to-many and many-to-many communications over a network. Examples include multicast

addressing using the User Datagram Protocol (UDP) and "IP Multicast," which is an extension to the standard IP network-level protocol that enables sources to send a single copy of data to multiple devices that explicitly request the information. Ex.1024, 347, 350, 355. Once an IP Multicast user requests access to a specific multicast, the multicast messages pass to the TCP/IP protocol stack, making them available as input to the user's application (*e.g.*, a video viewer). *Id.*, 7.

C. Protocols for Real-time or Low-latency Data Transmission

49. In addition to the TCP/IP protocols described above, before the '687, '697, and '218, developers and standard development organizers had created additional protocols to facilitate real-time transport of video and other data over the Internet.

1. Real-Time Transport Protocol (RTP)

50. RTP is a communication protocol originally developed in 1996 that optimizes live audio and video data transmission. *See* Ex.1027; Ex.1028. RTP is commonly used in protocols requiring real-time audio and video data streaming over the Internet, such as the Voice Over Internet Protocol (VoIP). *See* Ex.1024, 400, 402.

2. HTTP Polling

51. HTTP is a protocol that is built on top of TCP/IP. Ex.1024, 392. HTTPS is a secure version of HTTP that uses encryption and verification to protect data. HTTP polling consists of a sequence of request-response messages between a

client and a server. Upon receiving a request, the server responds with a new message, if there is one, or with an empty response if no new message is available for that client. After a short time Δ, called the polling interval, the client polls the server again to see if any new messages are available. *See* Ex.1024, 45-46. Various real-time applications including chat, online games, and text messaging used HTTP polling in the 2016 time-frame.

3. WebSocket

52. WebSocket is a client-server communication protocol standardized by the Internet Engineering Task Force in 2011 that is bi-directional, full-duplex, and continuous. *See* Ex.1029; Ex.1030. Real-time web applications commonly feature WebSocket connections to facilitate a persistent stream of data from a backend server to the end client. Ex.1030; Ex.1018 ¶6. Once a WebSocket connection is established between a server and a client, the client receives instant updates from the server without the need to poll. Ex.1030.

53. In any content distribution system, the distribution server needs to transmit data to receiving client devices. If the system uses sockets to communicate, by way of analogy, a transmit server is like a restaurant, and the client devices are all homes, and each buildings' door is a socket. *See* Ex.1022, 87. Food is delivered out of the restaurant's door, *i.e.*, socket, and accepted through each separate homes' door, *i.e.*, individual sockets. *Id.* The roads between the restaurant and homes are

the internet's TCP protocol. Moreover, each home can send someone or something to the restaurant--it is not a one-way communication system. *Id.*, 160. This connection is typically established when a client device sends a request to a running server process (live streaming content, i.e., open restaurant) to "initiate a TCP connection to the server" (knocks on the door). *Id.*, 160-61. To do so, the client device must be able to specify "the address of the server process, namely, the IP address of the server host and the port number of the server process." *Id.* Afterwards, the connection can be established at the socket with the identified IP address and port number. Thus, the same server process accepts connections to multiple destination sockets (client devices) which creates a one-to-many topography.

4. Stream Control Transmission Protocol (SCTP)

54. SCTP is an IP transport layer protocol adopted in 2001 that provides reliable, in-sequence data transport. *See* Ex.1031; Ex.1032. As a message-oriented communication protocol, SCTP is ideally suited for applications requiring multiple, independent streams of messages to be delivered in parallel—in other words, "multi-streamed"—because the protocol does not require a dedicated socket for each data stream. *See* Ex.1033. SCTP's multi-streaming capability is particularly useful for controlling congestion in multimedia streaming over the Internet. Ex.1034.

5. Real-Time Messaging Protocol (RTMP)

55. RTMP is a low-latency data transmission protocol in use as of at least 2012 that is designed to support live online streaming in social media platforms, streaming platforms, and media servers. *See* Ex.1035, 3; Ex.1036, 1. RTMP data transmission begins with a client-initiated handshake between the client and server. Ex.1036, 7. Once a connection is established between the client and server, RTMP operates as a bi-directional multiplexing service over TCP to stream live and on-demand video or audio data from the server to the client device. *See* Ex.1035, 3. The Challenged Patents use this traditional streaming protocol:

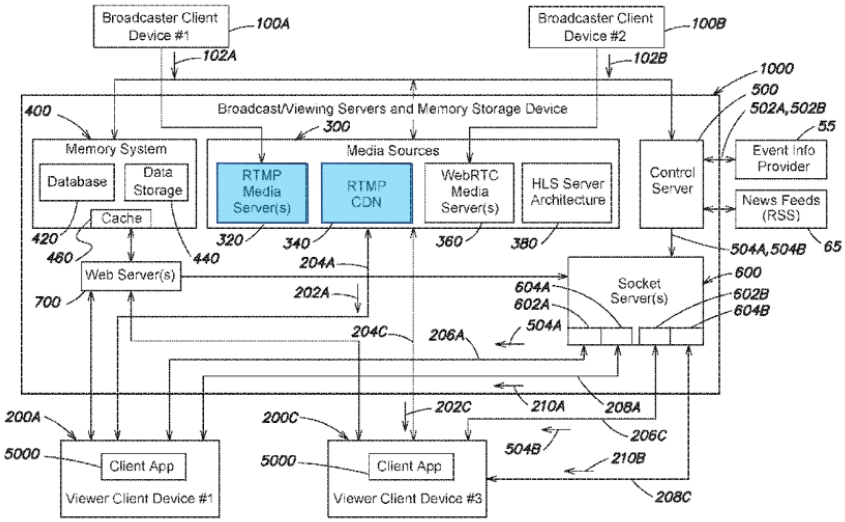

FIG. 2

See, e.g., Ex.1003, Fig. 2.

6. Web Real-Time Communication (WebRTC)

56. WebRTC is a technology first implemented in 2011 that enables real-time audio and video streaming within web browsers and mobile applications without an intermediary. Ex.1037, 1; Ex.1038, 3. WebRTC facilitates peer-to-peer

communications between mobile device web browsers by creating an RTCPeerConection, a signal through which mobile devices exchange hardware and codec compatibility information. Ex.1037. Once a connection between devices is created, WebRTC offers video calling, video chat, and file-sharing capability with minimal plugins. Ex.1038, 3. The Challenged Patents also use this traditional streaming protocol:

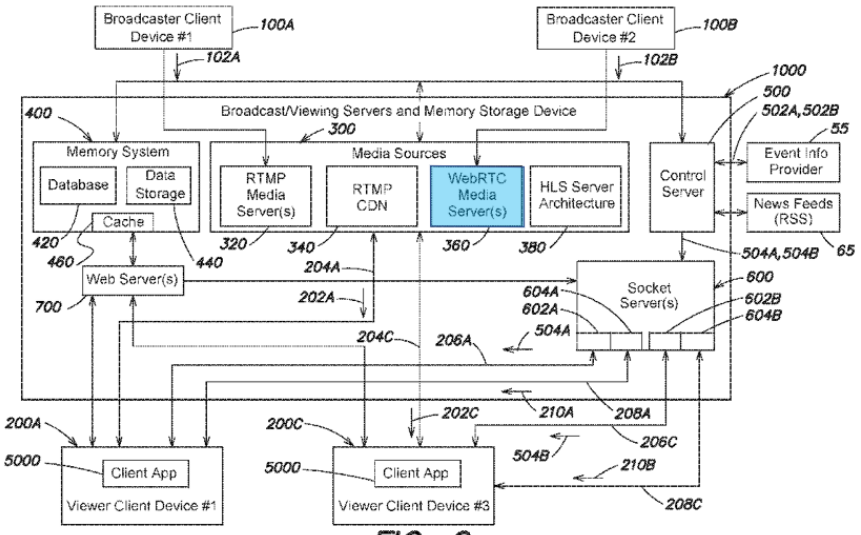

FIG. 2

See, e.g., Ex.1003, Fig. 2.

7. Dynamic Adaptive Streaming Over HTTP ("DASH" or "MPEG-DASH") / HTTP Live Streaming (HLS)

57. MPEG-DASH is an adaptive streaming protocol adopted in 2011 that enables segmented multimedia content delivery at different bit rates. Ex.1039, Abstract; Ex.1040, 2. In the MPEG-DASH process, an origin server pushes encoded, segmented stream data to the device over the Internet, as well as manifest files identifying alternative streams available to the player and their corresponding

URLs. *See* Ex.1040, 2. Once the user chooses a stream of the desired bit-rate, a web server transmits the data in the selected bit-rate stream to produce smooth playback on the user's device. *See* Ex.1041, 1; Ex.1035, 4. HLS, another adaptive streaming protocol adopted in 2009, functions similarly and can be used in many of the same applications as MPEG-DASH. Ex.1041, 1. The Challenged Patents also use this traditional streaming protocol:

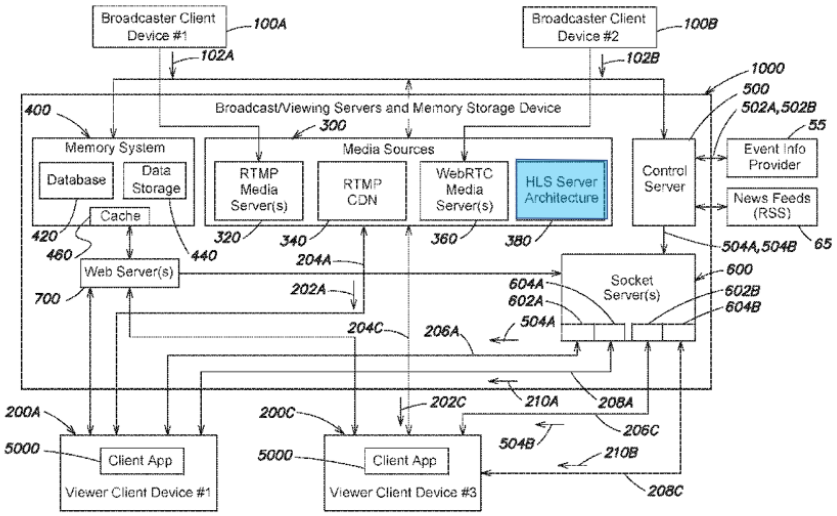

FIG. 2

See, e.g., Ex.1003, Fig. 2.

D. Internet Live Video Streaming

58. After the World Wide Web became widely available to the public in 1993, the Internet quickly evolved from a predominantly text-based medium to one that facilitated multimedia content delivery. *See* Ex.1024, 16-17; Ex.1042. In the late 2000s, video streaming services also developed technologies for dynamically combining video streams with relevant text-based data. For example, in 2007,

YouTube implemented an "overlay" system that superimposed advertising content relevant to the video onto a video stream without interrupting playback. Ex.1044, 1.

59. Not long after, numerous services developed tools for streaming live (rather than prerecorded) media over the Internet to multiple users in real time. Such examples available to the public before the Challenged Patents were filed included Livestream (founded in 2007), Twitch (same), Wowza (same), TikTok (formerly Musical.ly, 2014), Periscope (2015), and Facebook Live (2016). *See* Ex.1003, 2:4-27.

V. OVERVIEW OF THE CHALLENGED PATENTS

60. All of the Challenged Patents are continuations, or continuations of continuations of one another. The Challenged Patents share a common specification, and the claims substantially overlap. Their family relationship is shown below:

61. Because all of the Challenged Patents share a common specification, for convenience, I have cited to the '687 as representative.

A. Alleged Problem in the Art

62. According to the ’687, there was a need to improve “conventional techniques for transmission of digital content via the Internet” that included a “latency” problem. Ex.1003, 2:31-40. Latency is “the delay between a first user generating a live video stream for transmission via the Internet and a second user receiving a copy of the live video stream via the Internet for viewing.” *Id*. Specifically, “live video streams with relatively high quality (e.g., high definition HD and high bit rate, such as 2 to 5 megabits per second),” may have difficulties “synchronizing such … copies of a live video stream” amongst a large number of viewers. *Id.*, 2:43-56. The ’687 purports to solve this problem, ensuring a “low-latency viewing experience for significant numbers of viewers” and “appropriate synchronization of event information across all broadcasters of an event and their associated viewers.” *Id.*, 5:28-37.

B. Alleged Invention of the Challenged Patents

63. In my opinion, the ’687 is directed to a “server and memory storage architecture” for obtaining, and providing to viewers, (1) an “audio and/or visual feed” including “commentary associated with [a] live event” and (2) a “separate event data feed including real time information associated with the … live event.” *Id.*, 3:7-20; *see also id.*, 7:16-37. A block diagram of the system is shown in Figure 1A:

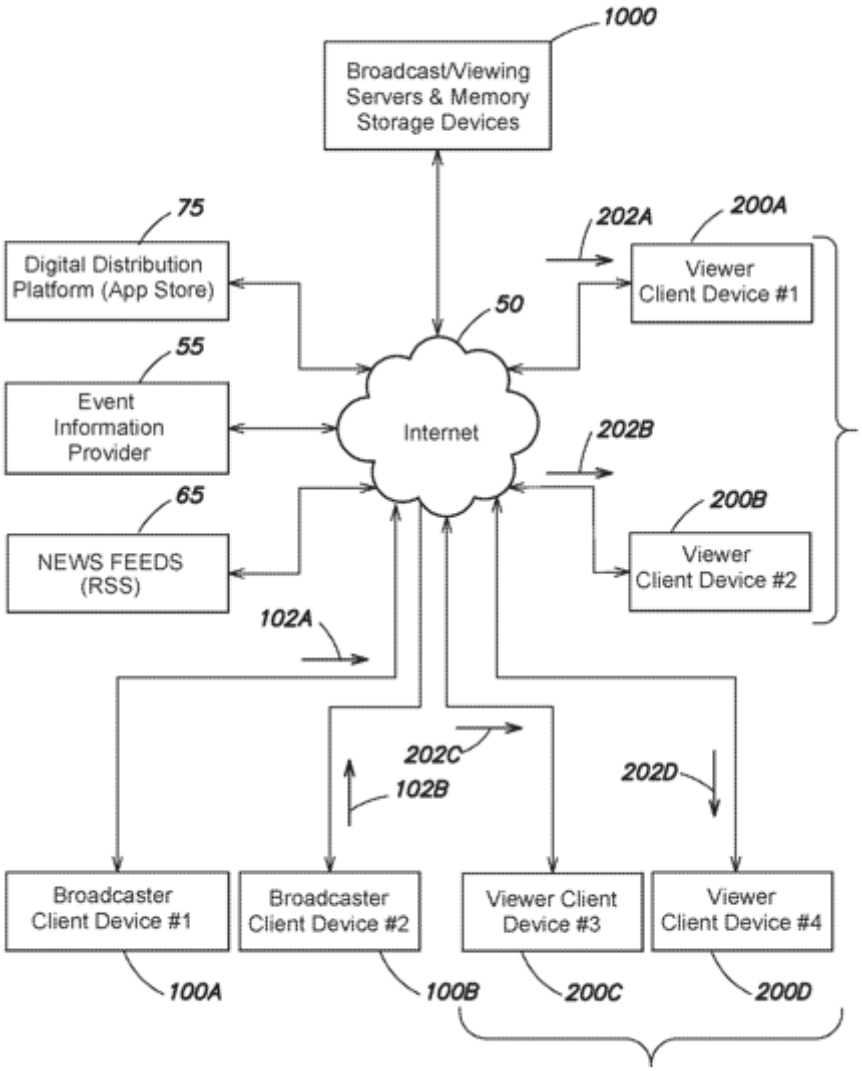

Id., 11:19-25, Fig. 1A. Figure 1A depicts providing "a first viewer client device (200A)" of "a first plurality of viewer client devices (200A, 200B)" individual "copies (202A, 202B) of a first broadcaster's live stream of digital content (102A)." *Id.*, 9:25-50.

64. Figure 2 shows additional system details. For instance, Figure 2 depicts viewer client devices ("VCDs"), media sources, web servers, a control server, a socket server, event sockets, an event information provider, and a memory system.

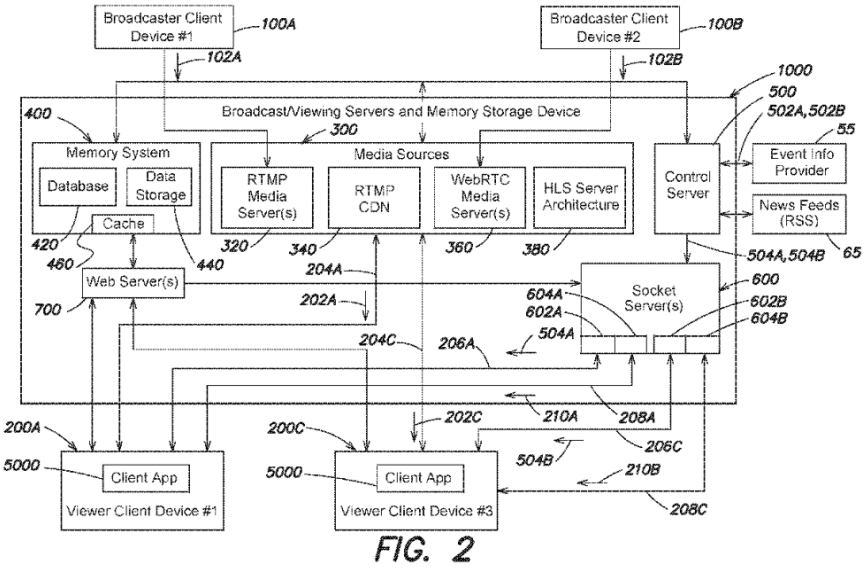

FIG. 2

Id., Fig. 2. I address how the ’687 describes certain components relevant to the claims below.

65. The ’687 describes media sources as generic “computer servers” comprising known components such as “processors, memory, and … communication interfaces.” *Id.*, 19:17-23, 55:15-25. Although in some implementations the media sources may include media servers directed to specific known protocols, such as RTMP and HLS, the media sources’ purpose is to “receive a live stream of video-based commentary from a given broadcaster client device and provide copies of the live stream of video-based commentary to one or more [VCDs].” *Id.*, 19:17-31.

66. The ’687 describes a control server as generic server equipment comprising one or more processors, memory devices, and communication interfaces, *id.*, 55:15-25, that retrieves “event information” from an “event information

provider" to pass to the socket server, discussed below. *Id.* 19:51-55, 21:46-58. The event information is "germane to" a particular "live sporting event," *e.g.*, the event's score information. *Id.* 19:37-56.

67. The '687 describes a web server as a generic server designed to facilitate communications "between the servers/memory storage devices [] and one or more mobile broadcaster/viewer client device executing the client app." *Id.* 18:55-65. According to the '687, "much of the instructive communication between the client devices and the servers/memory storage devices [] occurs via the web server(s)." *Id.* 18:64-67. The webserver also facilitates communications "to and from web-based client devices (that access the web server(s) via a web portal at a particular URL)." *Id.* 18:55-65. The web server accomplishes this, in one implementation, by "select[ing] a particular media server of the media sources [] to which a given broadcaster connects to provide the broadcaster's live stream of digital content ... ." *Id.* 19:37-47.

68. The '687 describes socket server(s) as generic servers. *Id.* 55:15-25. The socket server's purpose is to "facilitate communication" of "synchronized event information retrieved by the control server" between the control server and the VCDs. *Id.* 20:7-15. The socket server uses "one or more sockets … dedicated to the particular event" allowing VCDs "to establish an event information channel with the socket server." *Id.* 20:15-21. The socket server then shares event information

in "event messages" via the event information channel "in a synchronized manner" to all viewers "following the particular event." *Id*. The socket server may facilitate communication of "chat messages" in a similar manner. *Id.* 20:22-54.

69. The '687 explains that the "connections between a given client device and a particular socket of a socket server may be persistent authenticated connections (e.g., with IP-based fingerprint identifiers for anonymous users)" and that "event messages" among other data carried on a channel between a client and a socket are "data packets including," *e.g.*, "event information." *Id.* 20:55-58, 20:64-21:4. Each event socket has a corresponding "event identifier" (either an "EventID" or "StreamID") that the VCD "uses ... to connect to [the] socket," *e.g.*, by using a "URL including the ... EventID in a path of the URL." *Id.* 21:63-22:8. Like known servers before the alleged invention of the '687, messages carried on channels between sockets of the "socket server" use traditional IP mechanisms, *e.g.*, data packets, and each "socket" is uniquely addressable, *e.g.*, by using an identifier that may be contained, *e.g.*, in a URL. *Id.* 20:55-21:4, 21:63-22:16.

70. According to the '687, a "'communication channel' refers to a physical or logical connection over a transmission medium to convey information signals from one or more senders to one or more receivers," which the '687 notes "would be readily appreciated in the relevant arts." Ex.1003, 5:38-45. As examples of Internet communication channels, the '687 describes generic Internet

communication channels between a sender and receiver: (1) a "video" channel between a media server and a VCD to convey video-based commentary, (2) an "event information" channel between a socket and the client device to convey event information, and (3) a "chat/system event" channel between another socket and the client device to convey chat and other information. *Id.* 5:45-58.

71. Although the '687 claims that the foregoing server architecture and its functionality are "inventive," as explained in more detail herein, there is a reasonable likelihood that the prior art discloses or renders obvious every limitation of at least one the Challenged Claims.

VI. LEVEL OF ORDINARY SKILL IN THE ART

72. I understand that a POSA is a hypothetical person presumed to have the skill and experience of an ordinary worker in the field at the time of the alleged invention.

73. I understand that there are multiple factors relevant to determining the level of ordinary skill in the pertinent art at the time of the alleged invention. These factors include the education of active workers in the field, the sophistication of the technology, the type of problems encountered in the art, and the prior art solutions to those problems. I further understand that the POSA can embody the knowledge and experience of multiple individuals with different educations and backgrounds.

74. In determining the characteristics of a hypothetical POSA of the Challenged Patents at the time of the claimed invention, I considered several things, including the type of problems encountered in this field, and the rapidity with which innovations were made. I also considered the sophistication of the technology involved, and the educational background and experience of those actively working in the field, and the level of education that would be necessary to understand the Challenged Patents.

75. Finally, I placed myself back in the relevant period of time and considered the state of the art and the level of skill of the engineers working in this field at that time.

76. In my opinion, a POSA at the time of the alleged invention described in the ’687, ’697, and ’218 patents would have at least a Bachelor’s degree in electrical engineering, computer engineering, or a related field, as well as a basic understanding of live streaming technology, and at least four years of experience with researching, designing, implementing, or testing live streaming technology. Additional education or experience in related fields could compensate for deficits in the above qualifications. By this definition, as of August 2005 I exceeded these qualifications.

VII. CLAIM CONSTRUCTION

A. The ’687, ’697, and ’218 Patent

77. For purposes of this declaration, I have been asked to apply Patent Owner's apparent understanding of the terms as reflected in its infringement contentions. *See* Ex.1019. I reserve the right to respond to any specific construction proposed by Patent Owner that may depart from its apparent understanding of the claims as reflected in its infringement contentions. However, my ultimate opinions of invalidity of the Challenged Claims would not change under any reasonable construction of the claims, to the extent that the claims can be understood by a POSA.

78. Based on my review of PO's interrogatory responses and infringement contentions in the Texas Litigation, PO appears to advance the below structures for its means-plus-function limitations, which I have applied in my analysis for purposes of this declaration only:[2]

[2] For purposes of the proceeding only, I adopt those structures advanced by the PO. I reserve the right to challenge those limitations, and any others, for failure to meet the requirements of 35 U.S.C. 112 in the co-pending Texas Litigation, including challenging the claims as indefinite for failure to sufficiently identify a corresponding structure. I further reserve the right to respond any new arguments by PO regarding these claim limitations and the purported corresponding structures in

’687 Limitation	Structure	Function
27.1	Media sources performing the algorithm disclosed in 9:25-50 and Figure 2 of the ’687.	Providing the first copy to the first viewer client device via a first video communication channel;
27.2	Control Server performing the algorithm disclosed in 9:50-55 and Figure 2 of the ’687.	Retrieving, via the Internet, first event information germane to a first live sporting event; and
27.3	Socket Server performing the algorithm disclosed in 9:55-67 and Figure 2 of the ’687.	Transmitting the first event information to at least the first viewer client device via a first event information communication channel that is different from the first video communication channel.
28.1	Socket Server performing the algorithm disclosed in 20:27-35 and Figure 2 of the ’687.	Transmitting and receiving first chat information regarding the first live sporting event via at least one first chat/system event Internet communication channel that is different from the first video communication channel and the first event information communication channel.
29.0	Control Server performing the algorithm disclosed in 17:48-	Updating the first event information and queueing an asynchronous message including the updated first event

this proceeding, the co-pending Texas Litigation, or any other proceeding that may arise.

	55 and Figure 2 of the ’687.	information for transmission on the first event information communication channel.
30.0	HLS mother server, HLS child servers, and an HLS CDN performing the algorithm disclosed in 33:33-45 and Figures 8-9D.	Providing the first copy to the first viewer client device via a first video communication channel between the HLS CDN and the first viewer client device, wherein the first copy is based on the first HLS file suite received by the HLS mother server.

’697 Limitation	**Structure**	**Function**
27.1	Media sources performing the algorithm disclosed in 9:16-41 and Figure 2 of the ’697.	Providing the first copy to the first viewer client device via a first video communication channel;
27.2	Control Server performing the algorithm disclosed in 9:41-46 and Figure 2 of the ’697.	Retrieving, via the Internet, first event information germane to a first live sporting event; and
27.3	Socket Server performing the algorithm disclosed in 9:46-58 and Figure 2 of the ’697.	Transmitting the first event information to at least the first viewer client device via a first event information communication channel that is different from the first video communication channel.
28.1	Socket Server performing the	Transmitting and receiving first chat information regarding the first live sporting

	algorithm disclosed in 20:17-25 and Figure 2 of the '697.	event via at least one first chat/system event Internet communication channel that is different from the first video communication channel and the first event information communication channel.
29.0	Control Server performing the algorithm disclosed in 17:28-38 and Figure 2 of the '697.	Updating the first event information and queueing an asynchronous message including the updated first event information for transmission on the first event information communication channel.
30.0	HLS mother server, HLS child servers, and an HLS CDN performing the algorithm disclosed in 33:21-33 and Figures 8-9D.	Providing the first copy to the first viewer client device via a first video communication channel between the HLS CDN and the first viewer client device, wherein the first copy is based on the first HLS file suite received by the HLS mother server.

79. The fact that I have applied Patent Owner's apparent understanding of the terms does not mean that I necessarily agree that a POSA would have understood the terms in the same manner, nor does it mean I necessarily agree that a POSA would have found the scope of the claim terms definite.

VIII. SUMMARY OF THE PRIOR ART

A. U.S. Patent Pub. No. 2015/0163379 ("Herzog")

80. Herzog is a U.S. Patent Publication that was published on June 11, 2015. Herzog is generally directed to a content delivery system and network

architecture that delivers live video and audio streams of sporting events to users while also providing meta-data associated with the sporting event to a user over a separate feed, where the video/audio stream and meta-data are synchronized. *See* Ex.1015, Abstract, ¶¶3, 18.

81. Herzog states that "a need exists for improved technologies for synchronizing information (for example, HLS video and meta-data) that is published and processed at different rates." *Id.* ¶4. Herzog explains that it "may be desirable to provide a mobile device, such as a tablet" with a "video that is streamed live from the Internet to a client playing using HTTP Live Streaming (also known as HLS)" while also providing "additional information related to the HLS video," such as meta-data. *Id.* ¶3.

82. Herzog uses an "Indianapolis Car Race" as a primary example illustrating how its system transmits live "video, audio, and metadata … from a sports venue via different communication paths," to a client device, but notes its system can be applied to any live sporting event. *Id.* ¶¶16, 83. Herzog's Figure 4, shown below, depicts an illustrative streaming network:

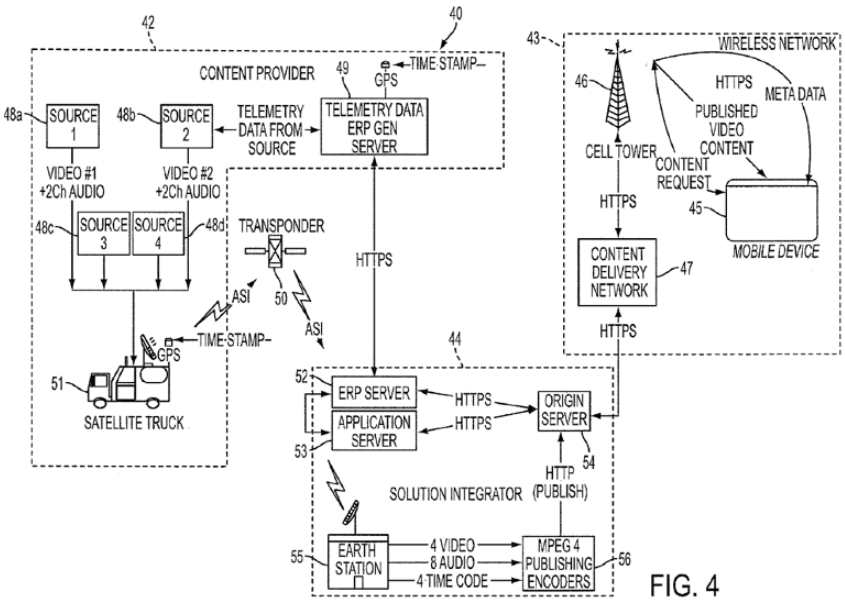

FIG. 4

Id. Fig. 4.

83. Herzog's Figure 4 shows a content provider, a solutions integrator, and a wireless network. *Id.* ¶¶43, 45. The content provider "is configured to provide video and audio data of an event occurring in real time and provide telemetry data (meta-data) including several parameters changing during the event." *Id.* ¶45. The meta-data "provides additional information related to the HLS video" and in the context of a car race, such as the example shown in Figure 4, "may include varying parameters regarding the status of each car and driver in the race" including "lap number, car speed and acceleration, tire pressure, etc." *Id.* ¶¶3, 45. Video and audio data includes "multiple video/audio streams of race cars and drivers, as they are imaged at different locations on the race track." *Id.*

84. Figure 4 shows "four video/audio streams provided from four different imaging sources, namely sources 48a-48d." *Id.* ¶46. "As shown, each source provides one video stream and two channels of audio …." *Id.* These channels are transmitted to an Enhanced Result Protocol (ERP) generator server configured to provide telemetry data in HTTPS format to the solutions integrator. *Id.* ¶47. The solutions integrator is depicted in another embodiment below in Figure 6:

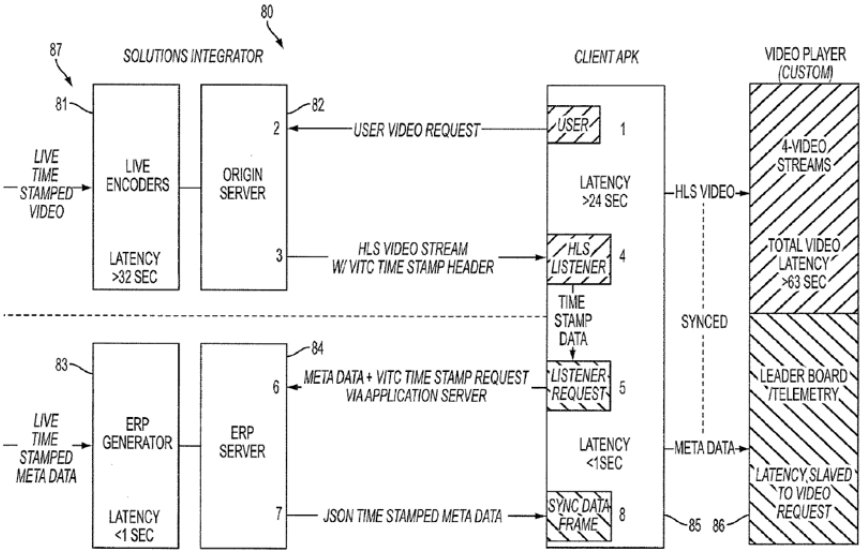

FIG. 6

Id. Fig. 6.

85. Once live encoders receive "time stamped video/audio data and convert the same into an MPEG stream with a VITC time stamp header," they then send the data to an origin server to "publish[] the data as an HLS video stream with a VITC time stamp header." *Id.* ¶67. In parallel, the ERP generator extracts various parameters from the live time stamped meta-data, then sends those parameters to the ERP server for publishing "in an HTTPS communications format," such as a .JSON

time stamp. *Id.* ¶¶67-68. At this point, the data is ready to be streamed to a client device upon request by a client application package (APK).

86. To begin streaming, a client device "initiates a video request of one or more channels of video/audio for viewing a live event on the device display." *Id.* ¶70. The origin server receives the request and begins "streaming HLS video of the live event with the VITC time stamp header to the client application." *Id.* ¶¶71-72. Upon viewing a video of the live event, a user can "initiate[] a request" to the ERP server "for meta-data that is associated with the VITC time stamp of a particular video channel on the display of the video player." *Id.* ¶¶74-75. In response, the ERP server transmits synchronized, .JSON-time-stamped meta-data to the client application for display on the video player. *Id.* ¶77. As shown above in wireless network 43, the meta-data is then provided through the origin server to the user device "through one or more networks." *Id.* ¶¶3, 27, 51. At the user device, "all the data may be displayed … in correct time sync" because the "video and audio data and the meta-data are both time stamped with consistent (e.g., GPS) timing protocols." *Id.* ¶18.

87. Herzog also discloses that a general server can be substituted for several servers used to execute a specific function. *Id.* ¶66 (describing a "solutions integrator" as "more generally, a server capable of receiving two types of signals, namely RF video/audio signals and HTTPS signals ... .").

B. U.S. Patent Pub. No. 2014/0229992 ("Ellis")

88. Ellis is a U.S. Patent Publication that was published on August 14, 2014. Ex.1016, Cover. Ellis is generally directed to systems and methods that enhance "sports-related media content access and display." *Id.*, Abstract. Ellis discloses an interactive system for watching sports content, including "wagering and fantasy league support." *Id.*

89. Ellis identified the need for current delivery systems to provide "a custom set of features and functionality for specific types of media content, such as sporting events …." *Id.* ¶4. Ellis explained that the current systems "fail to take full advantage of today's high-end user equipment devices." *Id.* ¶5. To solve the above problems, Ellis discloses broadcasting systems and methods for "enhanced sports-related media content access and display." *Id.*, Abstract. Ellis's Figure 1 is an illustrative media system:

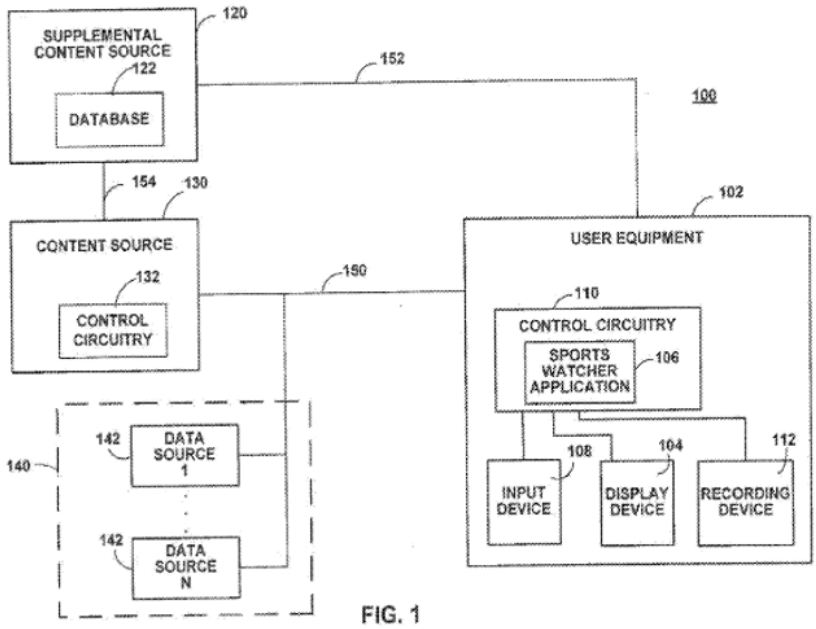

Id. Fig. 1.

90. As depicted, Ellis's system contains a content source, a supplemental content source ("SCS"), data sources, user equipment, and a sports watcher application. *Id.*, Fig. 1. Even though the content source, SCS, and data sources "are shown in Fig. 1 as separate elements," their "functionality may be combined into a single mechanism" provided "from a single system at a single facility" or "their functionality may be provided by multiple systems at multiple facilities." *Id.* ¶47.

91. Ellis describes how users connect to available video feeds by selecting a live event corresponding to a "source identifier (e.g., channel identifier)," as shown in Figure 2B:

220

Tuner (222)	Primary Source ID (224)
1	<sourceid_2>
2	<sourceid_1>
3	<sourceid_8>
4	<sourceid_4>

230

Source ID (232)	Type (234)	Profile Score (236)
<sourceid_1>	Game	90
<sourceid_2>	Game	95
<sourceid_3>	Commentary	45
<sourceid_4>	News	75
<sourceid_5>	Movie	25
<sourceid_6>	Movie	35
<sourceid_7>	Highlights	65
<sourceid_8>	Game	80

Id., Fig. 2B.

92. Then, the content source distributes the live-event streams to multiple user devices over separate communication paths 150. *Id.* ¶¶39-40, Fig. 1. The content source can be "any suitable source of media content, such as, a[n] … Internet or network media/webserver, or any other suitable ... system for originating or distributing passive or interactive content to user equipment 102." *Id.* ¶40. User equipment includes "any equipment suitable for presenting media content to a user" including "computer equipment." *Id.* ¶48. Communication path 150 may be a satellite, fiber-optic, cable, or any suitable wired or wireless path. *Id.* ¶45. For example, Ellis discloses IPTV, where the user may receive the content "on a particular network address (e.g., multicast address) on which an IP socket is currently joined." *Id.* ¶74.

93. While the system provides the video feed over communication path 150, the SCS further provides real-time information over a separate communication path 152. *Id.* ¶¶41-42, Fig. 1. The SCS can be "any suitable content source

configured to provide real-time sports scores and game summary information, … spread and wagering data, and any other sports-related information to user equipment 102." *Id.* ¶41. Communication path 152 may be a satellite, fiber-optic, cable, or any suitable wired or wireless path. *Id.* ¶45. Ellis explains that "in some embodiments, this sports-related information is provided to user equipment 102 as a plurality of real-time data feeds" where each "data feed may be individually accessed or subscribed to …." *Id.* ¶41.

C. U.S. Patent Pub. No. 2016/0036910 ("Spivey")

94. Spivey is a U.S. Patent Publication that published on February 4, 2016. Ex.1017, Cover. Spivey is directed to a live event data delivery system that can "broadcast live event data in real-time," including live data of ongoing sporting events. *Id.*, Abstract, ¶27.

95. Spivey identifies the problem of increased demand for "live event data in real time." *Id.* ¶2. As demand increased, "content providers may encounter obstacles to providing the data …, in real-time, and with minimal delays." *Id.* Conventional techniques "may cause latency or a delay from the time the data is received by the live event data content provider to when the client receives the data." *Id.* ¶28.

96. Spivey addressed the above problem and disclosed an apparatus and methods that "increase the speed at which live event data (e.g. sports scores and

breaking news), are broadcast … using topic queues and open duplex communication techniques, among other innovative techniques." *Id.* ¶27. Spivey reduced real-time data delay from over 30 seconds to "an order of milliseconds." *Id.* ¶28. Spivey Figure 1 "illustrates an embodiment of a system for broadcasting live event data:"

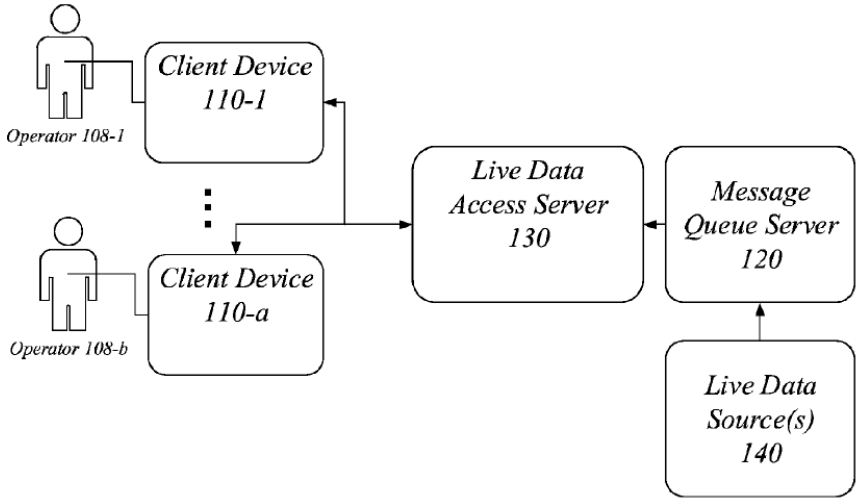

Id., Fig. 1.

97. Figure 1 depicts live data source(s), a message queue server, a live data access server, and client devices (110-1…110-a). *Id.*, Fig. 1. Client devices (110-a) "may include, without limitation, … a computer, … digital television, or any combination thereof." *Id.* ¶¶35, 39 ("Client device 110 may include any electronic device as described above."). The message queue server "may comprise one or more electronic devices capable of receiving, processing, and sending information for the system 100." *Id.* ¶ 35 (detailing possible examples including "a server, a server array

or server farm, a web server, a network server, [and] an Internet server" among others).

98. The live data source(s) "may include data feeds, generated by computing devices associated with a live event …." *Id.* ¶37. Also, "human observers of a live event" may gather and enter data into "an interface that communicates the gathered data to message queue server 120 as live data." *Id.*

99. In one embodiment, the message queue server 120 communicates directly with client devices (110-1…110-a) without the use of a live data access server. *Id.* ¶¶36, 38, 53. This embodiment, which divides the message queue server into at least two components, 450 and 410, is shown as operating environment 400, in Figure 4:

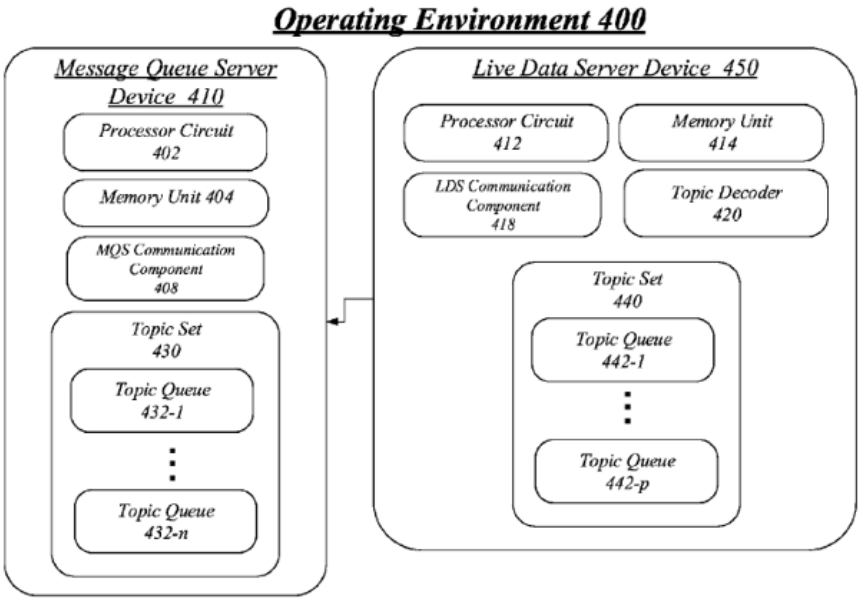

FIG. 4

Id., ¶53, Fig. 4.

100. In order to provide real-time data with reduced latency, LDS communication component receives "live data … payloads." *Id.* ¶55. The payloads include score information as well as "a player injury, an error, a record, a substitution, [or] statistic[s] …." *Id.*, Claim 11, Fig. 10. Live data server device ("LDSD") sorts the data, using attached topic labels. *Id.* ¶¶47, 49. A topic label could be a text string, "gamecenter.nfl.ravenssteelers," indicating to the live data server to place the attached data payload in the topic queue for the Ravens/Steelers game. *Id.* ¶66. The LDSD then provides the data to the message queue server device ("MQSD"), which stores the data into the appropriate topic queues. *Id.* ¶¶47, 54-56.

101. Spivey describes topic queues as an event information storage location that "may be a queue data structure, … where data payloads are placed …." *Id.* ¶51. Topic queues are locations that "may be hierarchically related." *Id.* ¶52. For example, "'gamecenter.nfl' may apply to all data about the National Football League" and a dependent topic may be "'gamecenter.nfl.ravenssteelers' which may relate to a specific game between two NFL teams." *Id.* "A third topic may be "gamecenter.nfl.ravenssteelers.stats" which may relate to statistics about the specific game." *Id.* ¶52.

102. Multiple topic queues for multiple different types of data (*e.g.*, statistics and plays) can exist for the same live event. *Id.* ¶¶52, 104 ("If there were a fourth topic queue 'gamecenter.nfl.ravenssteelers.plays', i.e. a topic at the same

hierarchical level as 'gamecenter.nfl.ravenssteelers.statistics', the data payload for 'gamecenter.nfl.ravenssteelers.statistics' would not be placed in this fourth topic queue.").

103. Additionally, Spivey discloses "a plurality of aggregator components." *Id.* ¶108, Fig. 14. The aggregator components (1460-m) may subscribe to any of the topic queues as discussed above, for example, "gamecenter.nfl.ravenssteelers.plays." *Id.* Among other features, the aggregator component (1460) may consolidate data from multiple topic queues "into an aggregated topic … which is then published" and can be created "by an operator of the content provider entity for use by subscribing operators" or "subscribing operators may be permitted to suggest or create their own aggregated topics." *Id.* ¶108. Aggregator components also may provide data storage, operate as a backup publisher, and determine if the incoming real-time data has "updated." *Id.* ¶¶115, 116, 118, 122.

104. User devices connect to the system using an "address," which "may resemble a uniform resource locator (URL), for example 'torq.cbssports.com/torq.'" *Id.* ¶82, Fig. 8. Additionally, Figure 9 below shows that users can select "topics of live data to subscribe to" from a list of "topics available from a message queue server in a topic selection list 902:"

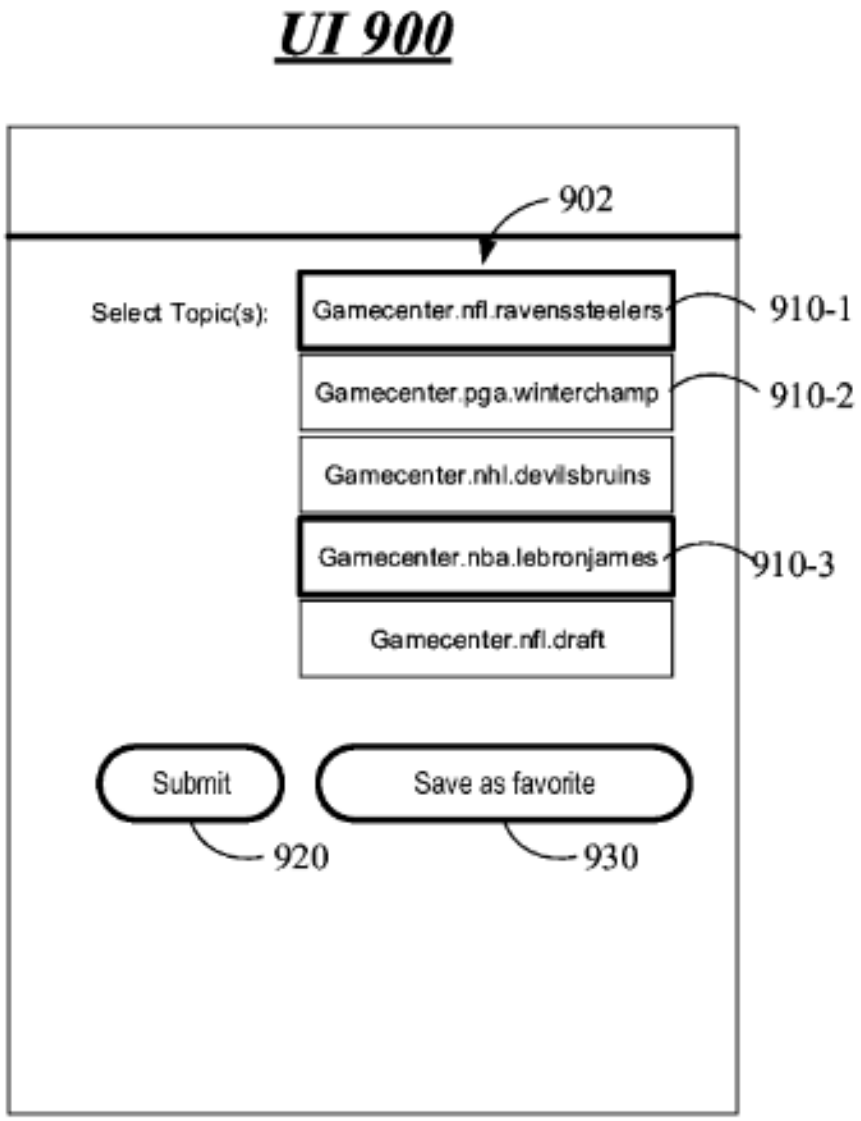

FIG. 9

Id., Fig. 9.

105. Spivey discloses that the connections between the system and the user are "full-duplex connection[s], such as a websocket connection" or that a "half-duplex connection may be utilized as well." *Id.* ¶61. A websocket connection "typically comprises a two-way connection between two entities, where each of the

two entities can send and receive data simultaneously." *Id*. A POSA would have understood that—in implementing such a "websocket connection"—the MQSD content distribution server would constitute a socket server. Finally, data is sent to connected and subscribed user devices from the topic queues. *Id.* ¶46 ("MQS communication component 308 … may push data from topic queues (332-1, 332-n) to the subscribers of the topics corresponding to those topic queues.").

IX. A POSA'S MOTIVATION TO COMBINE PRIOR ART REFERENCES WITH A REASONABLE EXPECTATION OF SUCCESS

A. Ellis in View of Spivey

1. Socket Server (*Spivey*)

106. In my opinion, a POSA would have been motivated to combine the teachings of Ellis and Spivey. As described above in Section VIII.B, Ellis is generally directed to systems and methods that enhance "sports-related media content access and display." Ex.1016, Abstract. Ellis discloses an interactive system for watching sports content, including "wagering and fantasy league support." *Id.* More specifically, Ellis is directed to a two-part delivery method/system comprising transmitting a video stream originated by a content source (*i.e.*, "media source") over communication path (150) and transmitting a data stream originated by a SCS over a separate communication path (152), as shown below:

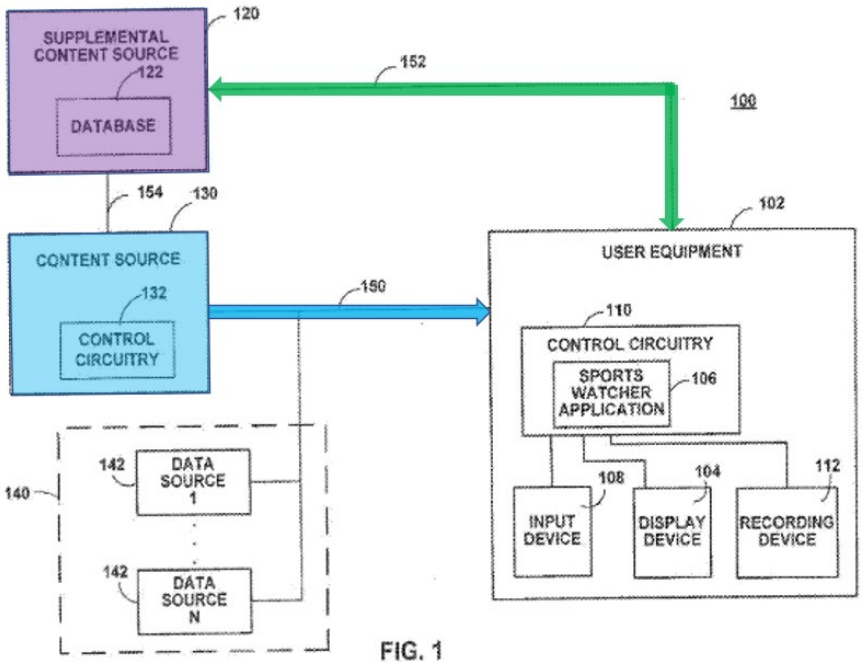

FIG. 1

Ex.1016, Fig. 1. Ellis teaches that the SCS "may be any suitable content source" that provides live data feeds containing "score, play, and up-to-date game summary information to user equipment." Ex.1016 ¶¶41, 155. Although Ellis discloses the claimed functionality of delivering live video and real-time supplemental content data over separate channels, Ellis does not explicitly disclose the backend architecture/process flows for delivering the supplemental content data.

107. As I explained in Section VIII.C, Spivey provides details relating to backend server architecture supporting a live-event data delivery system. Spivey explains that some live-event data delivery systems, such as the system disclosed in Ellis, can suffer from latency issues. Spivey improves on those systems by teaching the use of a control server and a socket server to provide live-event data to any number of customers in milliseconds. Ex.1017 ¶¶27-28.

108. In my opinion, a POSA—looking to improve Ellis's latency issues—would have been drawn to a system such as Spivey and would have recognized the potential in combining these references to achieve full-duplex communications between a client and a remote host while minimizing latency. *See* Ex.1046 at 46, 49-52. After evaluating Ellis and Spivey as a whole from the perspective of a POSA, I conclude that it would have been well within the purview of a skilled artisan to integrate the websocket server into Ellis' digital content delivery system. A POSA would have been motivated to do so for the purpose of enabling the digital content delivery system described by Ellis with while minimizing latency between consumers.

109. A POSA would have understood that socket servers were well-known components for implementing real-time data delivery, such as in Ellis, with reduced latency. §VIII.C, *supra*; Ex.1017 ¶¶96 (describing pushing a data payload from the message queue server device, *i.e.*, a socket server, to the client device "with a time delay of 100 milliseconds or less"), 35 (broadly describing a message queue server as "one or more electronic devices capable of receiving, processing and sending information to the system," including a wide range of exemplary devices). For example, a POSA would have appreciated Spivey's teaching that network components—specifically the Live Data Server Device (LDSD) (*i.e.*, "control server") and Message Queue Server Device (MQSD) (*i.e.,* "socket server")—are

useful in a data delivery system because they help dramatically reduce latency. Ex.1017 ¶¶28 (disclosing a system designed to reduce delay "to an order of milliseconds"), 43 (disclosing that a client device may request and participate in a websocket connection), 96 (reciting pushing digital content to a client device "substantially simultaneously … *e.g.*, with a time delay of 100 milliseconds or less … .").

110. Websockets protocol was an emerging technology that offered particular benefits for low-latency streaming when compared to the existing communication protocols. In my opinion, a POSA would have appreciated the benefits associated with the websocket connection that Spivey's socket server makes it possible to communicate with VCDs, including convenient and efficient full-duplex communications between a client and a remote host with low latency. *See* Ex.1017 ¶¶43, 61, 74, 92; Ex.1046 at 46. This is particularly true where Ellis's data delivery system does not specify a communications protocol. Thus, a POSA would have been motivated to integrate Spivey's LDSD and MQSD into Ellis's data delivery system to reduce latency to a time period "at least two orders of magnitude shorter than conventional time periods of legacy devices," as taught by Spivey and to obtain additional benefits associated with websocket communications. Ex.1017 ¶96.

111. I believe that a POSA seeking to achieve the above-described results would have done so by implementing Spivey into Ellis's current data delivery system by replacing Ellis's SCS with Spivey's LDSD (*i.e.*, "control server") and adding Spivey's MQSD (*i.e.*, "socket server") to achieve a predictable result of decreased latency data delivery, as illustrated below in the annotated, combined flow chart of Ellis Figure 1 and Spivey Figure 4 that I created for illustrative purposes:

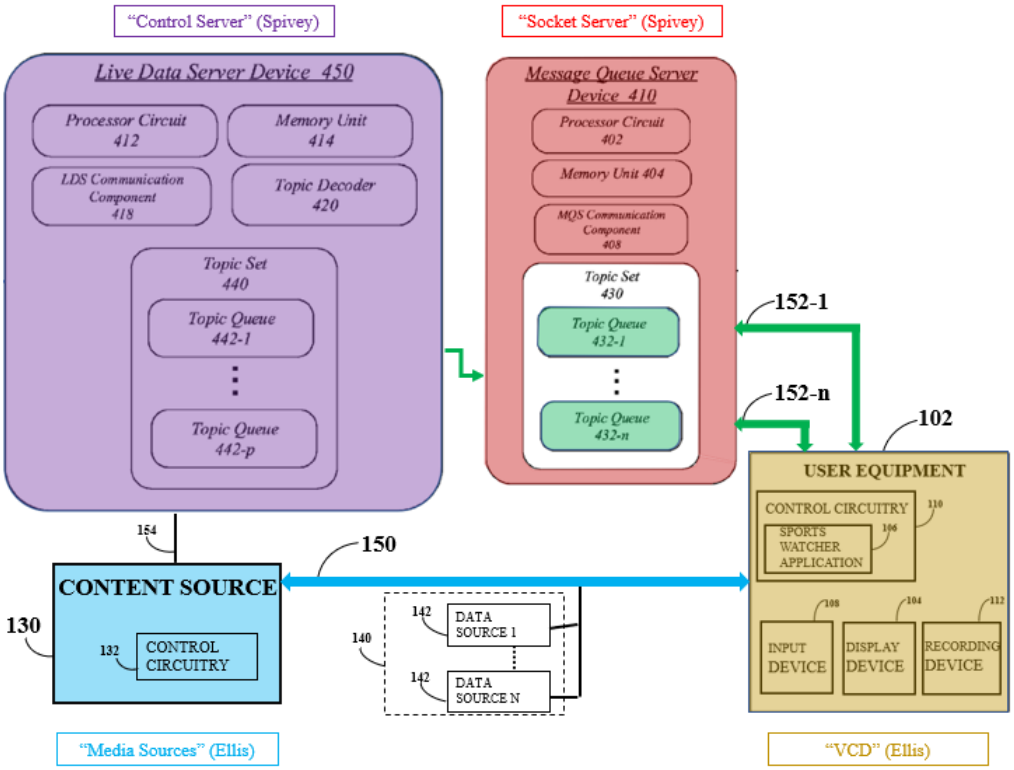

See Ex.1016 ¶¶39, 41, Fig. 1 (recreated); Ex.1017, Fig. 4 (recreated) (combined as explained above). The combined system would maintain the video content delivery system and upgrade the supplemental content data delivery system by including a socket server to provide real-time data with reduced latency.

112. It should be noted that a socket server is a fundamental element of Internet design - it allows for the design of applications without the concern and technical detail of incorporating the lower layers of an Internet communication system. It cuts to the heart of an Internet communication system, as it allows for creativity at the application layer without having to incorporate the details of the transport, network, data link, and physical layers.

113. In my opinion, a POSA would have been motivated to modify Ellis in view of Spivey because both references relate to the same technical subject matter—content delivery for real-time events. *Cf.* Ex.1016, Abstract, *with* Ex.1017, Abstract. Both Ellis and Spivey describe methods and/or systems for streaming video and/or event data to one or more users, such that video and/or event data are transmitted simultaneously. *See, e.g.*, Ex.1016 ¶156; Ex.1017, Abstract. Further, I believe a POSA would have also combined Ellis and Spivey because the references solve the same or similar problems, namely, providing video and/or event data to multiple users over the Internet quickly to multiple users.

114. Implementing certain portions of Spivey's system into Ellis's system would have been obvious because doing so would have required only the simple substitution of known elements for another to obtain predictable results. For example, Ellis discloses compatible hardware and software components to act as a source for event information to be transmitted to users. *See, e.g.*, Ex.1016 ¶47

("Content source 130, supplemental content source 120, and data sources 140 are shown in FIG. 1 as separate elements" but "[i]n practice, their functionality may be combined into a single mechanism and provided from a single system at a single facility, or their functionality may be provided by multiple systems at multiple facilities."). Predictably, therefore, a POSA would have simply substituted portions of Ellis's SCS with Spivey's LDSD and MQSD. For example, it would have been obvious to substitute any of Ellis's elements with any combination of Spivey's LDSD, MQSD, and/or Live Data Source(s), which are similarly involved in transmitting live event data to users and may be configured in any manner.

115. In my opinion, a POSA would have been further motivated to combine Ellis with Spivey because Spivey provides a complementary solution describing the details of the backend architecture for transmitting event data to multiple users. Ex.1017, Abstract. Resultingly, a POSA would have had a reasonable expectation of success in integrating Spivey's control server and socket server into Ellis's data delivery system. Understanding the compatibility of these similar systems, I believe a POSA would have had a reasonable expectation of success in integrating Spivey's system of "topic queues and open duplex communication connections" employing websockets to transmit "data from a live event (e.g., news event, a gaming event, sporting event, etc.)" to multiple users "in real-time" based on my knowledge and experience in the field. Ex.1017 ¶27.

B. Ellis in View of Spivey and Herzog

116. The motivation to combine Ellis with Spivey is discussed above. *See* §IX.A. It is my opinion that a POSA would have been further motivated to combine Ellis and Spivey with Herzog for at least two reasons.

1. Webserver (*Herzog*)

117. Although the combination of Ellis and Spivey discloses a webserver, generally, the combination of Ellis and Spivey does not explicitly disclose a webserver implemented specifically to facilitate communication between a client device and socket server. *See* Ex.1016 ¶40 (a content source may be "any suitable source of media content, such as, a[n] … Internet or network media/web server … ."); Ex.1017 ¶35 ("Message queue server 120 may comprise one or more electronic devices capable of receiving, processing, and sending information for the system. Examples of an electronic device may include ... a web server ... ."). However, in my opinion a POSA would have understood that webservers were well-known components in streaming systems that were useful for facilitating communication between client devices and socket servers. *See, e.g.*, Ex.1015 ¶¶26, 51, 56-58.

118. For example, Herzog teaches that its application server (*i.e.*, "webserver") "provide[s] ancillary functions in support of the communications services and/or application services provided through [the] network ... ." Ex.1015 ¶26. I believe a POSA would have understood that using Herzog's application server

was advantageous because its ancillary functions reduce latency by "satisf[ying] time synchronization requirements between a client application residing in mobile device 45 and the solution integrator 44," which includes an origin server (*i.e.*, socket server). *Id.* ¶51. Herzog's application server accomplishes this by "receiv[ing] the request from the client application software and [] sending the meta-data with [a] .JSON timestamp via the ERP server [*i.e.*, the control server]... ." Ex.1015 ¶58. Resultingly, a POSA would have been motivated to integrate Herzog's application server into the Ellis/Spivey combination by placing it in between Ellis's client device and Spivey's MQSD (*i.e.*, socket server), as depicted by the annotated figure below that I created for illustrative purposes:

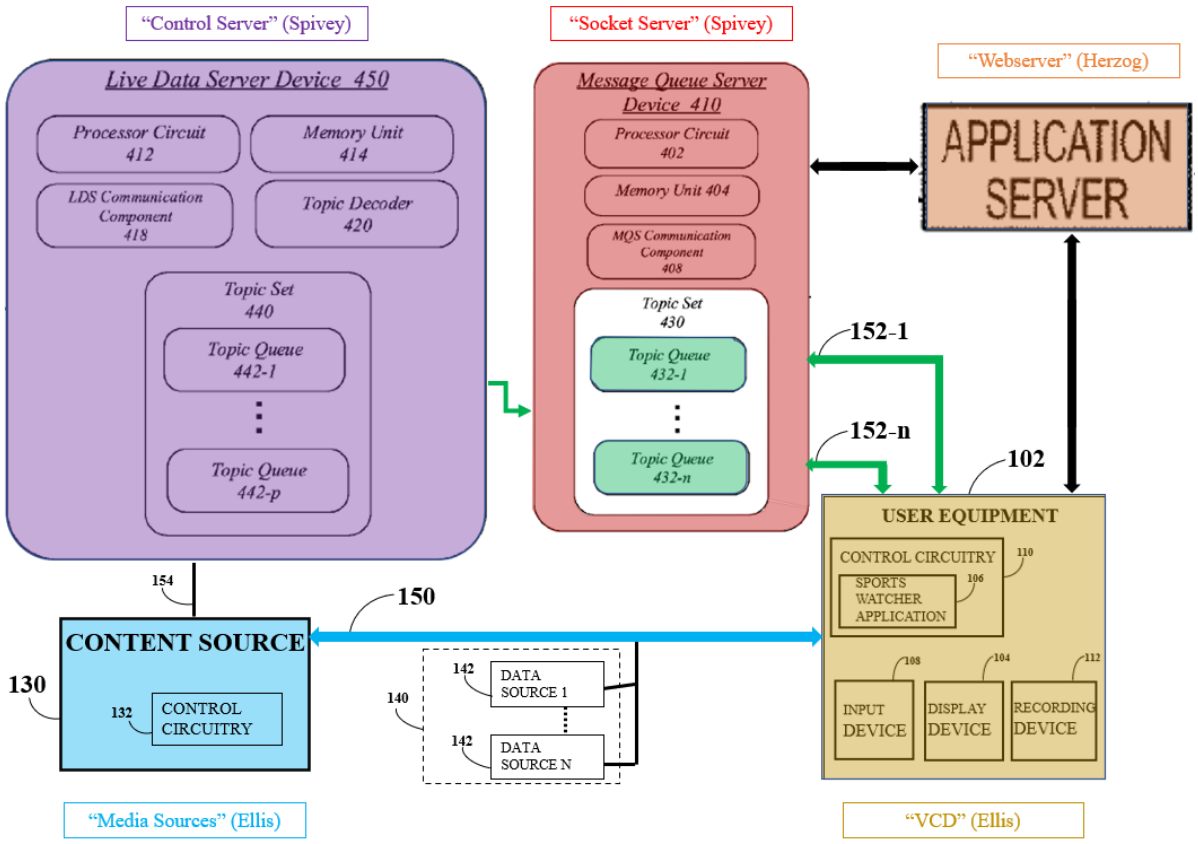

See Ex.1015 ¶¶51, 58, Figs. 4, 6 (recreated); Ex.1016 ¶¶39, 41, Fig. 1 (recreated); Ex.1017 Fig. 4 (recreated) (combined as explained above). Based on my analysis of the references, placing Herzog's application server in the location shown above would enable it to facilitate communication by "receiving the request" from the client device and sending back synchronized, time-stamped meta-data via the MQSD, in order to solve "latency issues." *Id.* ¶56. In my opinion, a POSA would have understood that—by integrating Herzog's application server into the system disclosed by Ellis and Spivey—the resulting system would benefit from "synchroniz[ing] two different types of data, for example, video/audio data and meta-data ... so that they display appropriately on a mobile device in correct time synchronization". Ex.1015 ¶64.

119. It is my opinion that a POSA would have had a reasonable expectation of success in integrating Herzog's webserver into Ellis and Spivey's data delivery. For example, Spivey's Message Queue Server (MQS) functions as an intermediary between live data sources and client devices by "process[ing] live data to provide live data quickly to the client devices ... ." Ex.1017 ¶36. Spivey teaches that the MQS may comprise a wide array of devices, including "a webserver," so long as a single apparent criterion is met: the device must be "capable of receiving, processing, and sending information for the system." *Id.* ¶35. Therefore, a POSA would have appreciated that Spivey's robust framework could easily be integrated

with Herzog's webserver to facilitate client device communication because Spivey broadly claims that nearly any electronic device can serve that purpose. In my opinion, a POSA would have understood that a webserver was "capable of receiving, processing, and sending information for the system" and, therefore, held a reasonable expectation of success in integrating the webserver into Spivey's network. *Id*.

2. Multiple live streams from one sporting event (*Herzog*)

120. The combination of Ellis and Spivey is directed to a system for distributing a singular live stream and attendant meta-data. It does not explicitly discuss transmitting multiple streams—either of the same event or of different events. In my opinion, a POSA would have added Herzog to the combination of Ellis and Spivey described above to implement its feature of multiple live streams from one sporting event into the data delivery system disclosed by Ellis and Spivey. Ex.1015 ¶57.

121. Herzog discloses a system for viewing multiple live stream videos related to the same sporting event. For example, Herzog's Figure 7 shows "four different videos of a live event and meta-data of multiple parameters:"

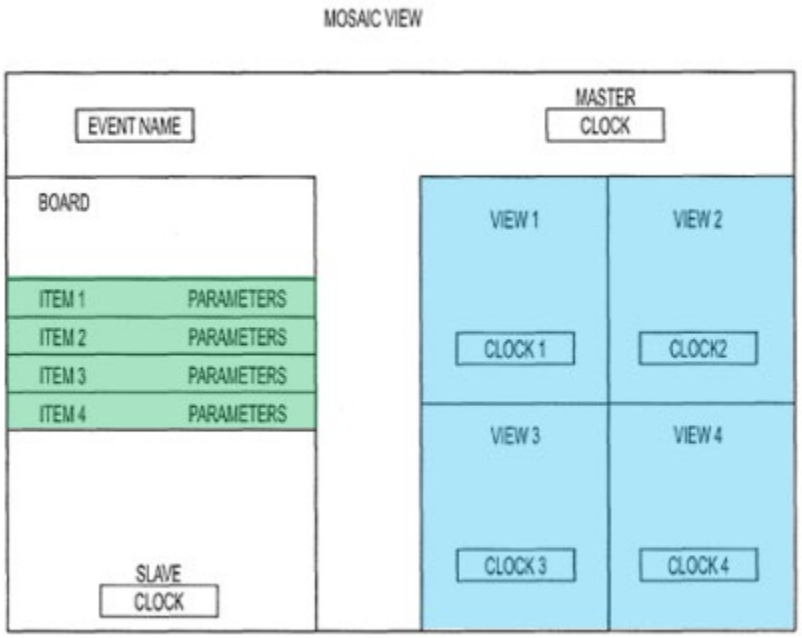

FIG. 7

Ex.1015 ¶12, Fig.7. The system provides "live videos of four" different views of the live event where a user can select which view they wish to receive. *Id.* ¶¶80-81. Although the live streams in Herzog originate from a single broadcaster, it is my opinion that a POSA would have understood that these streams could originate from different broadcasters and still be combined/synchronized at the client device. Further, the system architecture of Ellis and Spivey would not need to change at all to implement Herzog's feature.

122. In my opinion, a POSA would have been motivated to combine Herzog's multiple streams with the data delivery system of Ellis and Spivey for at least two reasons. First, Herzog relates to the same technical subject matter—content delivery for real-time events. *See* Ex.1015, Abstract. Herzog describes methods and/or systems for streaming video and/or event data to one or more users,

such that video and/or event data are transmitted simultaneously. *Id.* Second, Herzog solves the same or similar problems noted in Ellis and Spivey, namely, quickly providing video and/or event data to multiple users over the Internet. *See, e.g.*, Ex.1015 ¶¶3, 19, 51. Thus, in my opinion it would have been obvious to a POSA at the time of the alleged invention to look to and/or combine the references to arrive at the claimed invention.

123. I believe that a skilled artisan would have successfully combined Herzog with Spivey and Ellis. Herzog, Spivey, and Ellis disclose complementary means of achieving the common goal of synchronizing multiple forms of data—including video/audio and event data—and transmitting that data to one or more users. In my opinion, a POSA would have been motivated to combine Herzog with Spivey and Ellis because Herzog builds on Ellis by providing more content to a content distribution system such as Ellis, *e.g.*, "[a]ny number of imaging sources," such as "four video/audio streams" which are provided from the same event, such as a car race. Ex.1015 ¶46. For a POSA, adding video feeds, to a video distribution system applies a known technique to a known device that was ready for improvement to yield a predictable result. Resultingly, a POSA would have had a reasonable expectation of success because Herzog specifically contemplates being implemented in a content delivery system such as Ellis, stating that Herzog "can be used for any sporting event that has a unique video and meta-data source that do not follow the

same path of transmission," *e.g.*, every sporting event in Ellis's system. Ex.1015 ¶83.

124. In my opinion, combining certain portions of Herzog with Spivey and Ellis would have been obvious because doing so would require only the simple substitution of known elements for another to obtain predictable results. Ellis discloses a content source that provides "media content" including "broadcast programing" and "any other content capable of being displayed by … user equipment 102." Ex.1016 ¶40. Thus, it would have been obvious for a POSA to combine the media content provided in Ellis with the media content provided in Herzog, i.e., different broadcast feeds of the same event. Ex.1015 ¶80. Accordingly, a system including the interactive video and event information components of Ellis and the implementation details of Spivey and Herzog would have been an obvious combination of prior art elements according to known methods to yield predictable results.

C. Herzog in View of Spivey

1. Socket server (*Spivey*)

125. Herzog discloses methods and systems for viewing multiple videos related to the same sporting event in addition to live information about the event (meta-data). For example, Herzog's Figure 7 shows "four different videos of a live event and meta-data of multiple parameters" from which a user can select:

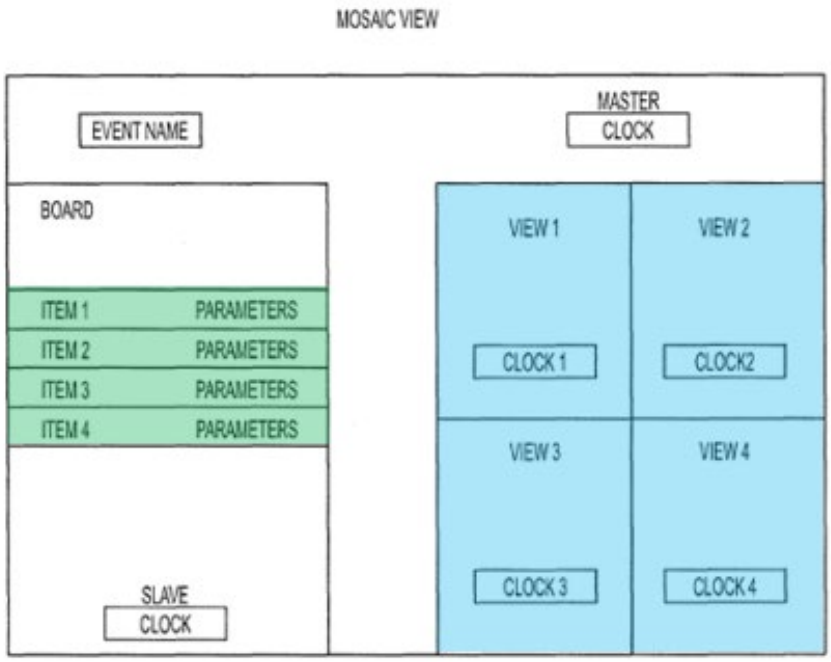

FIG. 7

Ex.1015 ¶¶12, 80-81, Fig.7. Herzog provides these video and data streams over separate connections:

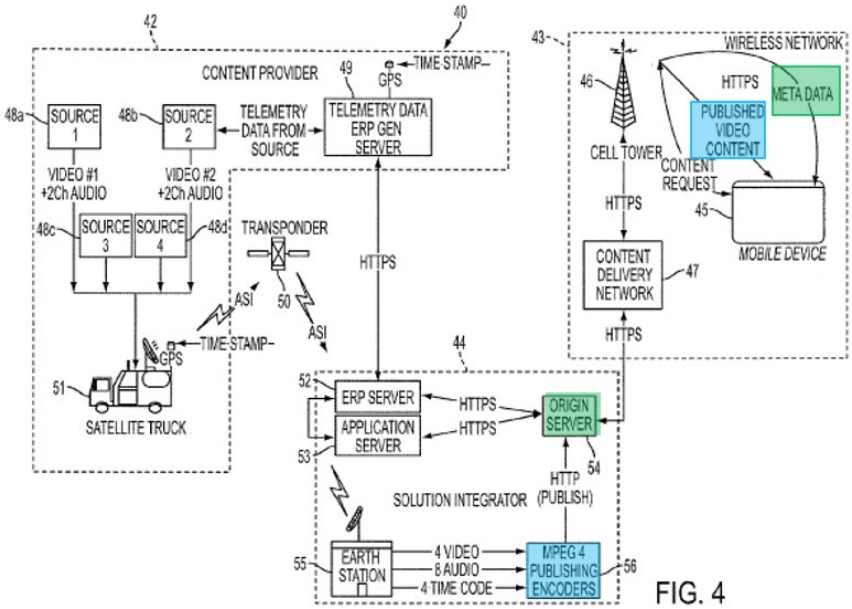

FIG. 4

Ex.1015 ¶¶48-52, 67, Figs. 4, 6.

126. Herzog does not specifically disclose some backend server architecture supporting the data distribution—the claimed socket server. However, it is my opinion that a POSA would have known that the websocket client-server communication protocol employed by Spivey was an alternative to the HTTP polling used by Herzog. *See* Ex.1046 at 46-47. Resultingly, a POSA would have found it obvious to implement Herzog's Origin Server as a websocket server—as taught by Spivey—to achieve full-duplex communications between a client and a remote host with low latency. *Id*. at 46 (observing that a websocket protocol provided a three-to-one reduction in latency as compared to half-duplex HTTP polling).

127. As noted above, it is my opinion that a POSA would have understood that socket servers were well-known components for implementing real-time data delivery, such as in Herzog, with reduced latency. *see* §IX.A.1, *supra*; Ex.1017 ¶¶35, 96. A POSA also would have appreciated the benefits associated with Spivey's MQSD (*i.e.,* "socket server") which establishes websocket connections with client devices, including convenient and efficient full-duplex communications between a client and a remote host with low latency. Ex.1017 ¶¶27-28, 43, 61, 74, 92, 96; Ex.1046 at 46; §IX.A.1. Resultingly, a POSA, looking to improve Herzog's latency issues, would have looked to implement a system such as Spivey.

128. In my opinion, a POSA would have looked to improve Herzog's latency issue by incorporating Spivey into Herzog's current data delivery system by

implementing Spivey's MQSD at Herzog's Origin Server to achieve a predictable result of decreased latency data delivery. *See* Ex.1015 ¶¶50-51, Fig. 4; Ex.1017, Fig. 4. The combined system would maintain Herzog's video content delivery system and upgrade the data delivery system to reduce latency.

129. In my opinion, a POSA would have been motivated to combine Herzog with Spivey for many of the same reasons that a POSA would have been motivated to combine Ellis with Spivey. First, Herzog and Spivey relate to the same technical subject matter—content delivery for real-time events. *See* Ex.1017, Abstract; Ex.1015, Abstract. Both references describe methods and/or systems for streaming video and/or event data to one or more users, such that video and/or event data are transmitted simultaneously. *See, e.g.*, Ex.1017, Abstract; Ex.1015, Abstract. Second, the references solve the same or similar problems, namely, providing video and/or event data to multiple users over the Internet quickly. *See, e.g.*, Ex.1017 ¶27; Ex.1015 ¶¶3, 19, 51.

130. As such, a POSA would have had a reasonable expectation of success in combining Herzog with Spivey because Spivey contemplates being implemented in a digital content delivery system such as Herzog, stating that it can be used with "any well-known communication techniques and protocols, such as techniques suitable for use with packet-switched networks (e.g., public networks such as the Internet, private networks such as the enterprise intranet, and so forth) ... ." Ex.1017

¶155. In my opinion, a POSA would have been motivated to combine Herzog with Spivey because Spivey provides a complementary solution describing the details of the backend architecture for organizing and transmitting event data to multiple users. Ex.1017, Abstract.

131. Combining certain portions of Herzog and Spivey would have been obvious because doing so would require only the simple substitution of known elements for another to obtain predictable results. Herzog encourages this flexibility, stating that it encourages "modifications … in various forms and examples, and that the teachings may be applied in numerous applications." Ex.1015 ¶90. To a POSA, it would have been obvious to substitute any of Herzog's meta-data distribution elements with any combination of Spivey's LDSD, MQSD, and/or Live Data Source(s), which are similarly involved in transmitting live event data to users and may be configured in any manner. *See* Ex.1017 ¶34.

D. Herzog in View of Ellis

1. Real-time information stream (*Ellis*)

132. In my opinion, a POSA would have been motivated to combine the real-time information stream of Ellis with the multi-stream delivery of Herzog. Herzog's disclosures are generally described above. *See* §VIII.A. To the extent Herzog does not disclose interactive content and/or a real-time information stream, it is my

opinion that a POSA would have been motivated to integrate such features into Herzog, in view of Ellis.

133. As explained, Herzog discloses a system providing video streams and event information streams to multiple users. *See* §VIII.A. To the extent Herzog does not disclose a third, real-time information stream, it is my opinion that a POSA would have found it obvious to implement such a stream into Herzog, in view of Ellis.

134. As set forth above, Ellis discloses a similar content delivery system configured to delivery live video and data over separate channels. *See* §VIII.B. Ellis further teaches that its system is configured to transmit chat information. Ex.1016 ¶132 (users "may also leave feedback regarding the commentary that other users in the media system may view when they access the same commentary."). In my opinion, a POSA would have understood that Ellis discloses a system that transmits and receives first/second real-time information, such as chat information, regarding the first/second live stream of digital content or the first/second live sporting event video-based commentary included in the first/second broadcaster's live stream of digital content. *See* Ex.1016 ¶126 ("To create and send a message (e.g., instant message or email message), the user may select send message option.").

135. Ellis provides this information on a separate channel to users. Ellis discusses transmitting the video "broadcasts" over one communication path and

"game summary information, … and any other sports-related information" over a separate communication path. Ex.1016 ¶41. Ellis provides that in "some embodiments, this sports-related information is provided to user equipment 102 as a plurality of real-time data feeds." *Id*. Thus, in my opinion a POSA would have understood that Ellis teaches transmitting via a first/second real-time information Internet communication channel between a real-time information socket of the at least one socket server and the first VCD of the first/second plurality of VCDs. A POSA would have been motivated to integrate Ellis's additional real-time information apparatus into Herzog's system.

136. In my opinion, a POSA would have been motivated to combine Ellis with Herzog because Ellis builds on Herzog's functionality by explicitly disclosing providing more content options, *e.g.*, real-time information, such as chat information or advertising content, to a content distribution system such as Herzog: "[C]ontent source 130 may be any suitable source of media content, such as … [an] Internet or network media/webserver, or any other … system for originating and distributing … content to user equipment 102" that provides "broadcast programming" and "sporting events." Ex.1016 ¶¶39-41, 62, Fig. 1, 2B. Moreover, a POSA would have understood that users would enjoy the interactive aspect Ellis's real-time information stream would offer.

137. For a POSA, adding an additional real-time information stream to a system such as Herzog (among other content types), which already provides multiple live streams to clients, applies a known technique to a known device that was ready for improvement to yield a predictable result. Resultingly, it is my opinion that a POSA would have had a reasonable expectation of success because Ellis specifically contemplates being implemented in a digital content delivery system such as Herzog, stating that it can be used with "any suitable source of media content," which includes IPTV content "delivered on a particular network address (e.g., multicast address) on which an IP socket is currently joined." Ex.1016 ¶¶39-40, 74.

2. Interactive content (*Ellis*)

138. It is also my opinion that a POSA would be motivated to combine Ellis with the system disclosed by Herzog to provide for interactive content on the platform. To the extent Herzog's meta-data streams, and/or Herzog/Ellis's real-time information streams do not provide interactive content—such as online gaming information—it would have been obvious to do so in view of Ellis.

139. Ellis discloses multiple interactive features relating to digital content. Ex.1016 ¶¶72-73, 93. In Ellis, the VCD's "game information display screen" displays online gaming information separate from and simultaneously with a video stream, as shown below in Figure 6:

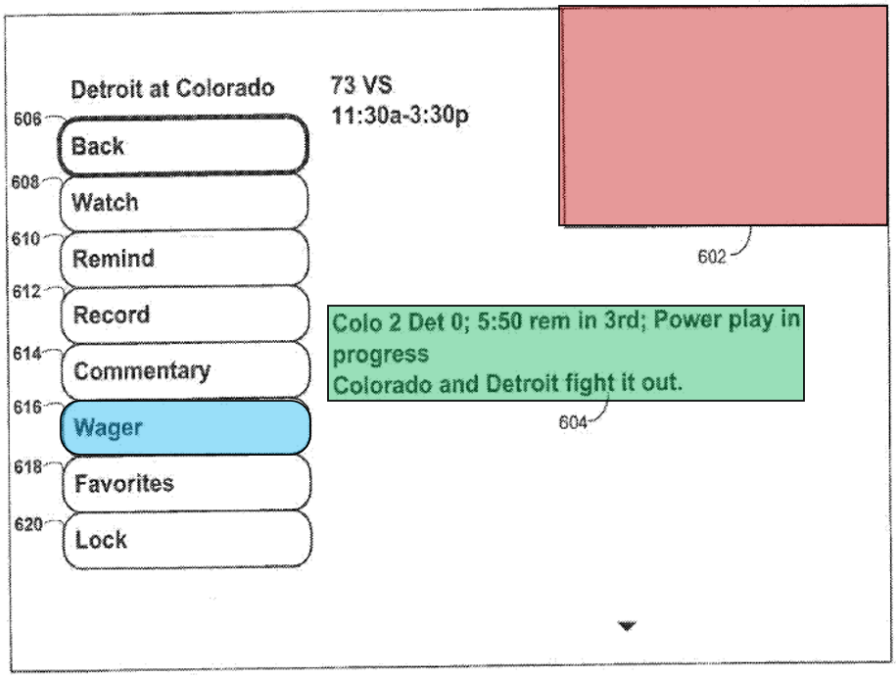

Ex.1016 Fig. 6. In this embodiment, "the game itself may be displayed in picture-in-guide (PIG) window 602" and the online gaming information may be displayed in two different ways. *Id.* ¶93. First, the flip banner 604 may "include additional live update data" such as "a scrollable description, live score and status updates, point spread, money line, and other wagering information, and other game-specific information." *Id.* Second, a user can select the "wagering option 616" to display a "custom wagering interface" allowing the user to "wager on the game, to modify a previous wager on the game, or to view a wager previously made on the game, including any results." *Id.* ¶98.

140. In my opinion, a POSA would have been motivated to provide Ellis's interactive feature to Herzog's meta-data stream because a POSA would have understood that users would enjoy the access to even further information about the

sporting event they are interested in, as well as the ability to customize the information they wish to see. A POSA would have also appreciated that users would want to be able to place wagers directly from the device. *Id.*

141. Resultingly, I believe that a POSA would have had a reasonable expectation of success in implementing Ellis's interactive feature into Herzog because Herzog already enables the flow of meta-data to users. A POSA would have understood that taking Herzog's meta-data stream a step further to allow users to interact with the meta-data would have required only minor programming adjustments that were well within the skill of a POSA.

E. Herzog in View of Spivey and Ellis

142. The motivation to combine Herzog with Spivey is discussed above. *See* §IX.C. A POSA would have further been motivated to combine Herzog and Spivey with Ellis.

1. Socket Server (*Spivey*)

143. Herzog does not specifically disclose some backend server architecture supporting the data distribution—the claimed socket server. However, a POSA would have known that the websocket client-server communication protocol employed by Spivey was an alternative to the HTTP polling used by Herzog. *See* §IV.C.3. Thus, it is my opinion that a POSA would have found it obvious to implement Herzog's Origin Server as a websocket server, as taught by Spivey, to

achieve full-duplex communications between a client and a remote host with low latency. *See* Ex.1046.

144. As noted above, *see* §IX.A.1, a POSA would have understood that socket servers were well-known components for implementing real-time data delivery, such as in Herzog, with reduced latency. §IV.C.3, *supra*; Ex.1017 ¶¶35, 96. As noted in Spivey, some live-event data delivery systems—such as Herzog—suffered from latency issues. Spivey provides backend server architecture supporting data distribution for multiple events. Ex.1017 ¶¶27-28. Specifically, Spivey taught an MQSD that could provide live-event data to any number of customers in milliseconds. *Id*. In my opinion, a POSA also would have appreciated the benefits associated with Spivey's MQSD (*i.e.,* "socket server"), which establishes websocket connections with client devices-including convenient and efficient full-duplex communications between a client and a remote host with low latency. Ex.1017 ¶¶27-28, 43, 61, 74, 92, 96; Ex.1046; §IV.C.3. Thus, in my opinion a POSA, looking to improve Herzog's latency issues, would have looked to implement a system such as Spivey.

145. In my opinion, a POSA would have achieve the desired result by incorporating Spivey into Herzog's current data delivery system by implementing Spivey's MQSD at Herzog's Origin Server to achieve a predictable result of decreased latency data delivery. *See* Ex.1015 ¶¶50-51, Fig. 4; Ex.1017, Fig. 4.

Based on my experience in the field, the combined system described would maintain Herzog's video content delivery system and upgrade the data delivery system to reduce latency.

146. It is my opinion that a POSA would have been motivated to combine Herzog with Spivey for many of the same reasons that a POSA would have been motivated to combine Ellis with Spivey. First, Herzog and Spivey relate to the same subject matter—content delivery for real-time events. *See* Ex.1017, Abstract; Ex.1015, Abstract. Indeed, both references describe methods and/or systems for streaming video and/or event data to one or more users, such that video and/or event data are transmitted simultaneously. *See, e.g.*, Ex.1017, Abstract; Ex.1015, Abstract. Second, the references solve the same or similar problems, namely, providing video and/or event data to multiple users over the Internet quickly. *See, e.g.*, Ex.1017 ¶27; Ex.1015 ¶¶3, 19, 51.

147. It is my opinion that a POSA would have had a reasonable expectation of success in combining Herzog with Spivey because Spivey contemplates being implemented in a digital content delivery system such as Herzog, stating that it can be used with "any well-known communication techniques and protocols, such as techniques suitable for use with packet-switched networks (e.g., public networks such as the Internet, private networks such as the enterprise intranet, and so forth) . . . ." Ex.1017 ¶155. Further, in my opinion a POSA would have been

motivated to combine Herzog with Spivey because Spivey provides a complementary solution describing the details of the backend architecture for organizing and transmitting event data to multiple users. Ex.1017, Abstract.

148. It is my opinion that combining certain portions of Herzog and Spivey would have been obvious because doing so would require only the simple substitution of known elements for another to obtain predictable results. Indeed, Herzog encourages this flexibility, stating that it encourages "modifications … in various forms and examples, and that the teachings may be applied in numerous applications." Ex.1015 ¶90. In my opinion, it would have been obvious to a POSA to substitute any of Herzog's meta-data distribution elements with any combination of Spivey's LDSD, MQSD, and/or Live Data Source(s), which are similarly involved in transmitting live event data to users and may be configured in any manner. *See* Ex.1017 ¶34.

2. Real-time information stream (*Ellis*)

149. As explained above, Herzog in combination with Spivey discloses a system providing video streams and event information streams to multiple users. *See* §IX.C. To the extent Herzog in combination with Spivey does not disclose a third stream—the claimed real-time information stream—a POSA would have found it obvious to implement such a stream into Herzog/Spivey, in view of Ellis.

150. As set forth above, Ellis discloses a similar content delivery system configured to delivery live video and data over separate channels. *See* §IX.D.1. Ellis further teaches that its system is configured to transmit chat information. Ex.1016 ¶132 (users "may also leave feedback regarding the commentary that other users in the media system may view when they access the same commentary."). In my opinion, a POSA would have understood that Ellis discloses a system that transmits and receives real-time information, such as chat information, regarding the live stream of digital content. *See* Ex.1016 ¶126 ("To create and send a message (e.g., instant message or email message), the user may select send message option.").

151. Ellis provides this information on a separate channel to users. Ellis discusses transmitting the video "broadcasts" over communication path and "game summary information, … and any other sports-related information" over communication path. Ex.1016 ¶41. Ellis provides that in "some embodiments, this sports-related information is provided to user equipment 102 as a plurality of real-time data feeds." *Id*. Thus, it is my opinion that a POSA would have understood that Ellis teaches transmitting via a first real-time information Internet communication channel between a real-time information socket of the at least one socket server and the first VCD.

152. Herzog in view of Spivey and Ellis discloses a socket specifically designated for chat information. Spivey utilizes topic queues to organize "data

payloads" that "relate to a specific game between two NFL teams." Ex.1017 ¶¶51-52. The data payloads, "[w]hen the live event is a sporting event," include, "for example, a score, a play, …, and so forth." Ex.1017 ¶48. Topic queues may be "hierarchically related." *Id.* ¶52. This means that when the system looks at the text string associated with the data payload, the system "may place the data payload only in the topic queue exactly matching the topic label." *Id.* ¶104. For example, if there were two topics "at the same hierarchal level" the data payloads placed in "'gamecenter.nfl.ravenssteelers.statistics' would not be placed in" another topic queue "gamecenter.nfl.ravenssteelers.plays." In sum, the statistics would be separate from the chat information. Thus, it is my opinion that a POSA would have understood Spivey to disclose a real-time information socket corresponding to the real-time information, such as chat information, relating to the digital content.

153. As such, a POSA would have been motivated to integrate Ellis's additional real-time information apparatus into Herzog/Spivey's system. In my opinion, a POSA would have been motivated to combine Ellis with Herzog/Spivey because Ellis builds on Herzog's functionality by explicitly disclosing providing more content options, *e.g.*, real-time information, such as chat information or advertising content, to a content distribution system such as Herzog: "[C]ontent source 130 may be any suitable source of media content, such as … [an] Internet or network media/webserver, or any other … system for originating and distributing …

content to user equipment 102" that provides "broadcast programming" and "sporting events." Ex.1016 ¶¶39-41, 62, Fig. 1, 2B. Moreover, a POSA would have understood that users would enjoy the interactive aspect Ellis's real-time information stream would offer.

154. For a POSA, adding an additional real-time information stream to a system such as Herzog (among other content types), which already provides multiple live streams to clients, applies a known technique to a known device that was ready for improvement to yield a predictable result. A POSA would have had a reasonable expectation of success because Ellis specifically contemplates being implemented in a digital content delivery system such as Herzog, stating that it can be used with "any suitable source of media content," which includes IPTV content "delivered on a particular network address (e.g., multicast address) on which an IP socket is currently joined." Ex.1016 ¶¶39-40, 74.

3. Multiple live events (*Ellis*)

155. In my opinion, there is a third reason to combine Ellis with the previously-discussed combination of Herzog and Spivey—the inclusion of data streams for multiple live events simultaneously.

156. Herzog discloses a system for viewing multiple videos related to the same sporting event in addition to live information about the event (meta-data). For

example, Herzog's Figure 7 shows "four different videos of a live event and meta-data of multiple parameters" from which a user can select:

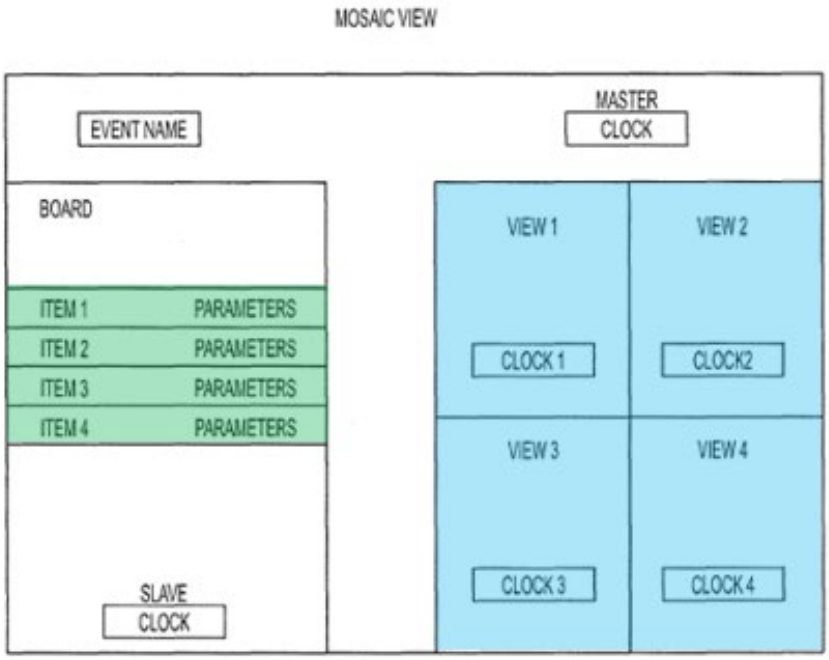

FIG. 7

Ex.1015 ¶12, Fig.7. The system provides "live videos of four" different views of the live event where a user can select which view they wish to receive. *Id.* ¶¶80-81. Herzog provides these video and data streams over separate connections:

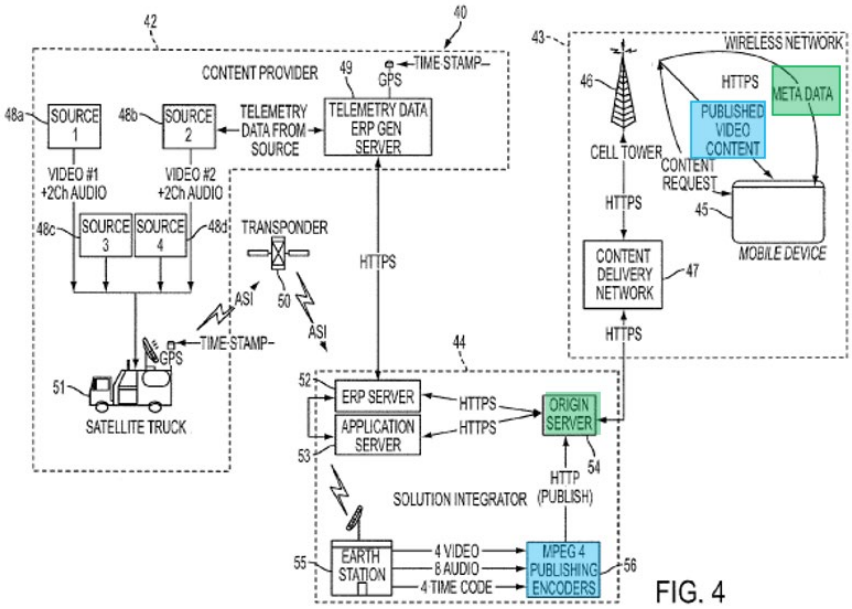

FIG. 4

Ex.1015 ¶¶48-52, 67, Figs. 4, 6. In my opinion, a POSA would have understood that, although Herzog discloses four different live streams from a single broadcaster, Herzog was already equipped to provide multiple, different live video and meta-data streams. As such, configuring this system to provide multiple events would have been obvious and well within the skill of a POSA.

157. To the extent Herzog does not specifically describe multiple live event streaming, it is my opinion that a POSA would have found it obvious to implement such functionality into Herzog/Spivey, as taught by Ellis. Ex.1016 ¶¶39-41, Fig. 2B; *see* §IX.A. In my opinion, a POSA would have been motivated to configure Herzog with Ellis's multiple event functionality because a POSA would have understood that users would enjoy having more content options, *e.g.*, multiple live

event streams, chat information, and advertising content. Ex.1016 ¶¶39-41, 62, Fig. 1, 2B.

158. Furthermore, it is my opinion that a POSA would have understood that adding a second live event to Herzog—among other content types—which already provides multiple live streams, applies a known technique to a known device that was ready for improvement to yield a predictable result. A POSA would have had a reasonable expectation of success in providing multiple event functionality because Ellis specifically contemplates being implemented in a content delivery system such as Herzog, stating that it can be used with "any suitable source of media content," which includes IPTV content "delivered on a particular network address (e.g., multicast address) on which an IP socket is currently joined." Ex.1016 ¶¶39-40, 74.

159. In my opinion, a POSA would have been motivated to combine Herzog with Spivey and Ellis for at least two reasons. First, Herzog, Spivey, and Ellis relate to the same technical subject matter—content delivery for real-time events. *Cf.* Ex.1016, Abstract, *with* Ex.1017, Abstract, *and* Ex.1015, Abstract. All three references describe methods and/or systems for simultaneously streaming video and/or event data to one or more users. *See, e.g.*, Ex.1016 ¶156; Ex.1017 Abstract; Ex.1015, Abstract. Second, the references solve the same or similar problems, namely, quickly providing video and/or event data to multiple users over the

Internet. *See, e.g.*, Ex.1016 ¶¶39-40, 176 Ex.1017 ¶27; Ex.1015 ¶¶3, 19, 51. As such, it would have been obvious to a POSA at the time of the alleged invention to look to expand upon Herzog with Spivey and Ellis to arrive at the claimed invention.

160. It is my opinion that a POSA would have successfully combined Herzog with Spivey and Ellis. Herzog, Spivey, and Ellis disclose complementary means of achieving the common goal of synchronizing multiple forms of data—including video/audio and event data—and transmitting that data to one or more users. For example, Herzog discloses a system for transmitting live video and related event data to viewers over the Internet. *See, e.g.*, Ex.1015 ¶¶3-4, 49-51, Figs. 4, 6. Herzog also indicates that multiple users may view one or more different live streams (HLS video) and receive related event information and discloses various systems for transmitting such information. *See, e.g.*, Ex.1015 ¶¶48-52, 70-77, Fig.4, 7. In my opinion, a POSA would have been motivated to combine Ellis with Herzog because Ellis builds on Herzog's functionality by explicitly disclosing providing more content options, *e.g.*, multiple live event streams, chat information, and advertising content, to a content distribution system such as Herzog: "[C]ontent source 130 may be any suitable source of media content, such as … [an] Internet or network media/webserver, or any other … system for originating and distributing … content to user equipment 102" that provides "broadcast programming" and "sporting events." Ex.1016 ¶¶39-41, 62, Fig. 1, 2B.

161. For a POSA, adding a second live event to a system such as Herzog (among other content types)—which already provides multiple live streams to clients—applies a known technique to a known device that was ready for improvement to yield a predictable result. In my opinion, a POSA would have had a reasonable expectation of success because Ellis specifically contemplates being implemented in a digital content delivery system such as Herzog, stating that it can be used with "any suitable source of media content," which includes IPTV content "delivered on a particular network address (e.g., multicast address) on which an IP socket is currently joined." Ex.1016 ¶¶39-40, 74.

162. A POSA would have been further motivated to combine Herzog and Ellis with Spivey because, as a POSA adds multiple live events to Herzog, a POSA would look to Spivey for a complementary solution describing the details of the backend architecture for organizing and transmitting event data to multiple users. Ex.1017, Abstract. For example, to implement Herzog's system and reduce its latency, a POSA would have had a reasonable expectation of success in using Spivey's system of "topic queues and open duplex communication connections" employing a "message queue server device" that may be implemented using "open source message broker software," e.g., RABBITMQ™, to broadcast "data from a live event (e.g., news event, a gaming event, sporting event, etc.)" to multiple users "in real-time." Ex.1017 ¶¶27, 58.

163. In my opinion, combining certain portions of Herzog, Spivey, and Ellis would have been obvious because doing so would require only the simple substitution of known elements for another to obtain predictable results. Thus, a POSA would have simply implemented Spivey's MQSD into Herzog's Origin server. Herzog encourages this flexibility, stating that it encourages "modifications … in various forms and examples, and that the teachings may be applied in numerous applications." Ex.1015 ¶90. To a POSA, it would have been obvious to substitute any of Herzog's meta-data distribution elements with any combination of Spivey's LDSD, MQSD, and/or Live Data Source(s), which are similarly involved in transmitting live event data to users and may be configured in any manner. *See* Ex.1017 ¶34. Additionally, Ellis discloses content source that provides "media content" including "broadcast programing" and "any other content capable of being displayed by … user equipment []." Ex.1016 ¶40. Thus, it would have been obvious for a POSA to expand the media content and functionality provided in Herzog with the media content provided in Ellis, *i.e.*, interactive and different broadcast feeds of the same event. Ex.1015 ¶80; Ex.1016 ¶40. Accordingly, adding Spivey's structure and Ellis's functionality to Herzog's system and components would have been an obvious combination of prior art elements according to known methods to yield predictable results.

X. GROUNDS

164. It is my opinion that the Challenged Claims of the Challenged Patents are invalid. I understand that in IPR proceedings, a petitioner may challenge the claims of a patent only on the basis of lack of novelty or obviousness based on patents and printed publications. Nothing in this Declaration should be construed as expressing any position or opinion as to whether the claims constitute patentable subject matter under 35 U.S.C. §101, or whether they satisfy the definiteness, enablement, or written description requirements of 35 U.S.C. §112. I reserve the right to opine on other matters of invalidity in other proceedings, including in addition to anticipation and obviousness, lack of written description, lack of enablement, indefiniteness, non-patentable subject matter, and improper inventorship.

165. For convenience, I have summarized the various grounds of invalidity discussed in this Declaration below:

’218 Patent			
Ground	Basis	Claims	Reference(s)
1A	§103	12-30	Ellis in view of Spivey
1B	§103	1-11	Ellis in view of Spivey and Herzog
2A	§102	21-22 and 27-28	Herzog
2B	§103	1-9, 12-14, 16-20, 23-24, and 29	Herzog in view of Spivey
2C	§103	25-26 and 30	Herzog in view of Ellis
2D	§103	10-11 and 15	Herzog in view of Spivey and Ellis
’687 Patent			
Ground	Basis	Claims	Reference(s)
1A	§103	1, 8-9, 19-25, 27-30	Ellis in view of Spivey
1B	§103	2-7	Ellis in view of Spivey and Herzog

2	§103	1-9, 19-25, 27-30	Herzog in view of Spivey and Ellis
’697 Patent			
Ground	Basis	Claims	Reference(s)
1A	§103	1, 7-9, 19-25, 27-30	Ellis in view of Spivey
1B	§103	2-6	Ellis in view of Spivey and Herzog
2	§103	1-9, 19-25, 27-30	Herzog in view of Spivey and Ellis

A. The ’218

1. ’218 Ground 1A: Claims 12-30 Are Obvious Over Ellis in View of Spivey

166. For the reasons stated in Section IX.A, above, it is my opinion that a POSA would have been motivated to combine the teachings of Ellis and Spivey to arrive at the claimed invention with a reasonable expectation of success.

a. Independent Claim 12

i. Limitation 12.0: “A method for providing, to a first client device, first event information germane to a first sporting event, wherein the first event information includes first online gaming information relating to the first sporting event, the method comprising:”

167. In my opinion, Ellis discloses this subject matter. Ellis discloses a SCS providing first event information germane to the first sporting event through a "plurality of real-time data feeds," one of which can include "sports score and game status information," while the other carries "sports commentary." Ex.1016 ¶41. Figure 1 illustrates Ellis's SCS:

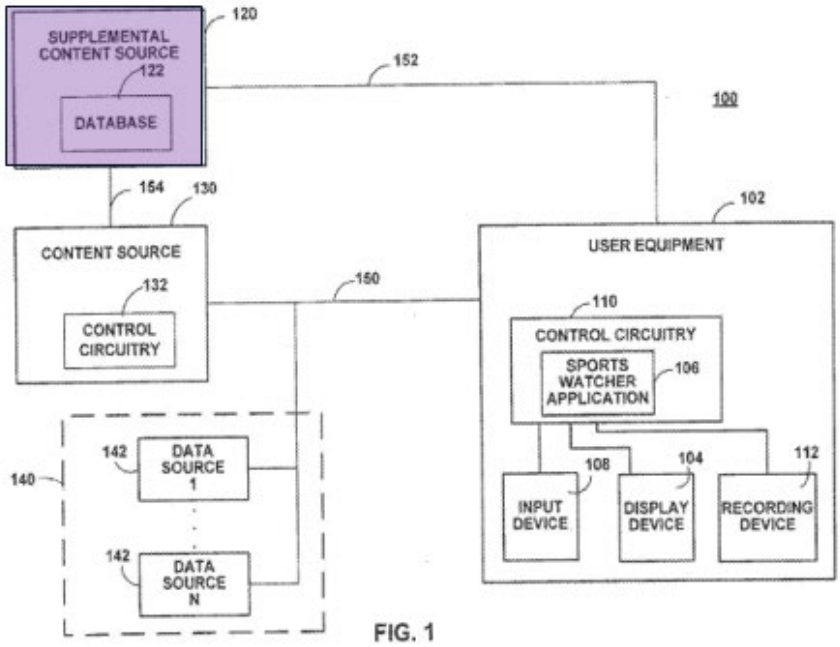

Id., Fig. 1.

ii. **Limitation 12.1: "transmitting the first online gaming information to at least the first client device via a first event information communication channel between a first event socket of at least one socket server and the first client device, wherein the first event socket corresponds to the first event information germane to the first sporting event; and"**

168. In my opinion, Ellis in view of Spivey discloses this limitation. Figure 1 of Ellis illustrates that the SCS transmits "sports-related information" to user equipment 102 over communication path 152. Ellis teaches that the SCS may be any suitable content source configured to provide real-time sports information, but does not specify that the SCS is a socket server which transmits the sports-related information to the user equipment.

169. Spivey's system is based on providing "live event data in real time." Ex.1017, Abstract. For example, according to Spivey, client devices "may request and participate in a websocket connection," which "typically comprises a two-way connection between two entities." *Id.* ¶¶43, 61. In my opinion, a POSA would have known that a websocket connection is between a socket server and at least one client.

170. The '218 explains that a socket server contains "one or more first event sockets [] dedicated to the first event information." Ex.1009, 22:1-4. The first event socket has a corresponding EventID that the VCD "uses … to connect to [the] socket," *e.g.*, by using a "URL including the … EventID in a path of the URL." *Id.* 22:5-17. Thus, it is my opinion that a POSA would have understood a "socket" to be a uniquely addressable communication endpoint on a server where first event information is provided to a VCD. *Id.* at 20:64-21:13, 22:5-25. A first event socket corresponding to the first event information germane to the first sporting event is

simply a socket where information about one sporting event is provided to VCDs. *Id.*

171. Spivey's topic queues are "where data payloads are placed" that, for example, "relate to a specific game between two NFL teams." Ex.1017 ¶¶51-52. The data payloads, "[w]hen the live event is a sporting event," include, "for example, a score, a play, …, and so forth." *Id.* ¶48. Topic queues have a corresponding "topic label" which is used "to identify a topic queue." *Id.* ¶49. "A topic label may be, for example" a "text string such as gamecenter.nfl.ravenssteelers." *Id.* ¶66.

172. Client devices use these topic label text strings to connect and subscribe to MQSD's topic queues. First, client devices "request a live data connection" with the MQSD by "select[ing] or enter[ing] the address or connection information to a particular" MQSD. *See id.* ¶¶81-82. This "address may resemble a uniform resource locator (URL)." *Id.* ¶82. Second, as shown in Figure 9, client devices can use the topic labels to select "the topics available from [the MQSD] in a topic selection list" and "subscribe to" those topic queues:

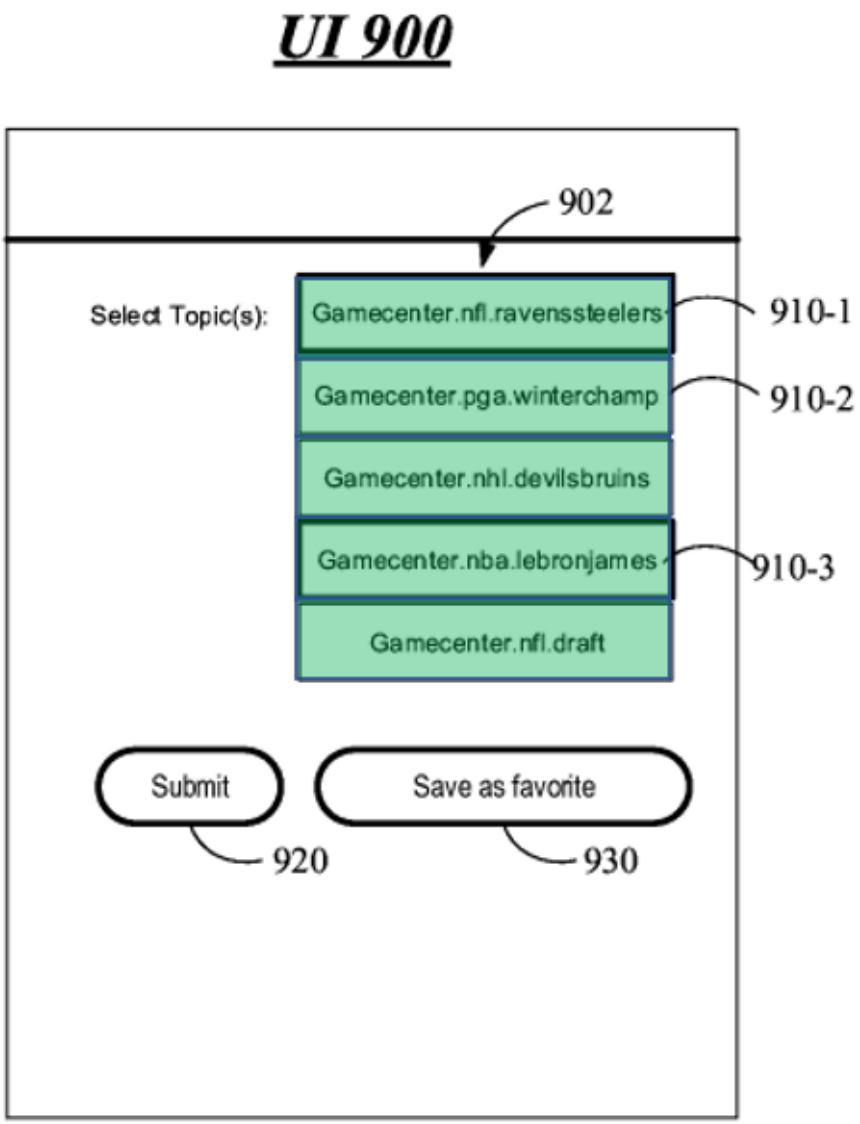

Id. ¶¶83-84, Fig. 9.

173. Third, "the data payload" may be pushed to the subscribed connected devices that requested that topic. *Id.* ¶96. Thus, it is my opinion that a POSA would have understood that Spivey's topic queues disclose first event sockets corresponding to the first event information germane to the first sporting event.

iii. **Limitation 12.2: "transmitting at least one instruction to the first client device to cause the first client device to request a first copy of a**

first stream of digital content relating to the first sporting event and receive the first copy via a first video communication channel between at least one media source and the first client device,"

174. In my opinion, Ellis in view of Spivey discloses this limitation. Spivey discloses receiving a digital content copy via a video communication channel between at least one media source and the VCD. For example, Spivey discloses transmitting a first media source's internet address to establish an internet communication channel. Ex.1017 ¶82, Fig. 8. Spivey teaches that a particular MQSD's address "may resemble a uniform resource locator (URL)." *Id.* ¶82. When a client device connects and subscribes to an MQSD using these topic queues, the MQSD pushes a "data payload" carrying digital content relating to a sporting event (*e.g.*, statistics or plays) to that device. *Id.* ¶¶96, 104. The MQSD does so using "any one and the combination of wired and/or wireless networks including … the Internet." *Id.* ¶179.

175. Although Ellis does not explicitly disclose transmitting at least one instruction to the client device to cause the device to request a digital content stream, in my opinion a POSA would have considered transmitting instructions for a user "to take some action" to receive content as suggested by the '218 (20:51-63) as an obvious marketing strategy to increase viewership of the digital content. For example, Ellis teaches that sports related content may include online discussion

boards and chat rooms enabling the system to message end users. Ex.1016 ¶38. Spivey teaches in a similar vein that a user interface lists topics available for subscription from a message queue server. Once a user subscribes to at least one topic, the live data app sends the selected topics to the MQSD[3] requesting online gaming information updates.

176. In the alternative, Ellis discloses transmitting at least one instruction to the first client device to cause the first client device to request a first copy of a first stream of digital content relating to the first sporting event. Ex.1016 ¶¶44 ("the

[3] Spivey often discusses a connection between the client device and the system using a live data access server ("LDAS"), however, Spivey also discloses that the MQSD may be "accessible to clients over the network directly." Ex.1017 ¶¶36, 84. For example, "MQS communication component 308 … may push data from topic queues 332-1, 332-n to the subscribers of the topics corresponding to those topic queues." *Id.* ¶46. Also, the system does not require an LDAS, only that it "may include a[n] [LDAS]." *Id.* ¶38. Thus, to me it is clear that a POSA would have understood Spivey to disclose a direct connection between the client devices and MQSD. I am further of the opinion that a POSA would have used this implementation because reducing the amount of server transfers would reduce latency, which is Spivey's main purpose.

interactive sports watcher application is a self-executing" application downloaded to user equipment), 51-52 (user equipment executes instructions of interactive sports watcher application). Thus, a POSA would have understood that Ellis necessarily transmits instructions to the client device during a digital handshake procedure between its user equipment and media sources at the outset of a connection.

iv. **Limitation 12.3: "wherein the first video communication channel is different than the first event information communication channel."**

177. In my opinion, Ellis discloses this limitation. Ellis discloses that a "content source" streams "broadcast programming" to multiple different users over individual "communication path[s] 150." Ex.1016 ¶¶39-40. Meanwhile, the system provides "real-time sports scores and game summary information" to those user equipment devices from the SCS using individual communication path 152:

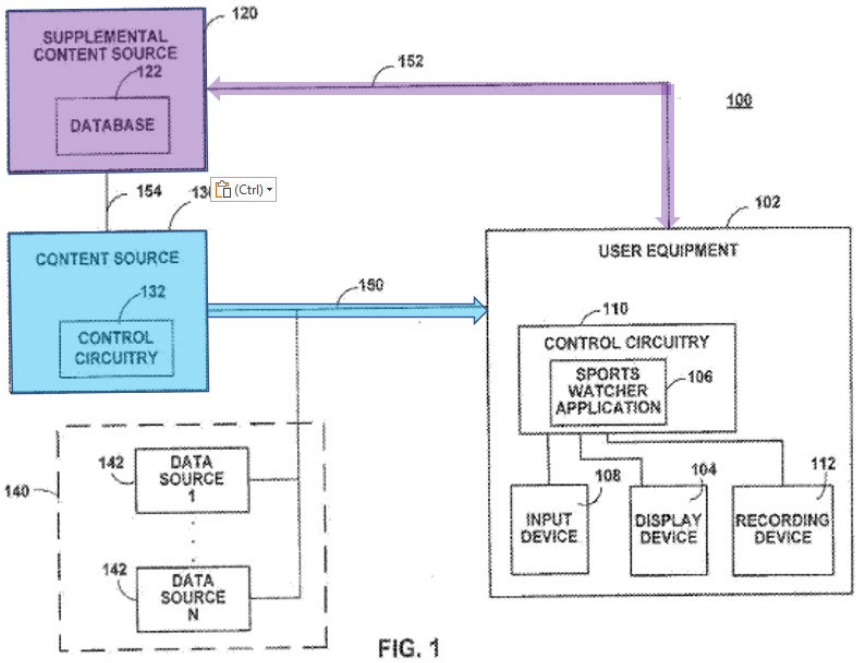

FIG. 1

Id. ¶¶39, 41, Fig. 1. Thus, it is my opinion that a POSA would have understood that the first live stream copies of digital content in Ellis do not provide event information using video internet communication channels.

b. Dependent Claim 13

i. **Limitations 13.0-13.3: "The method of claim 12, wherein**

prior to A), the method comprises: transmitting to the first client device a first event identifier (first Event ID) that corresponds to the first event socket;

receiving from the first client device a first URL including the first event identifier (first EventID) in the first URL; and

communicatively coupling the first client device to the first event socket to establish the first event information communication channel."

178. In my opinion, Ellis in view of Spivey discloses this limitation. Spivey discloses a user interface "to allow the operator to select or enter the address or connection information to a particular" MQSD.[4] Ex.1017 ¶¶81-82. As shown below in Figure 9, the address "may resemble a uniform resource location (URL)."

UI 900

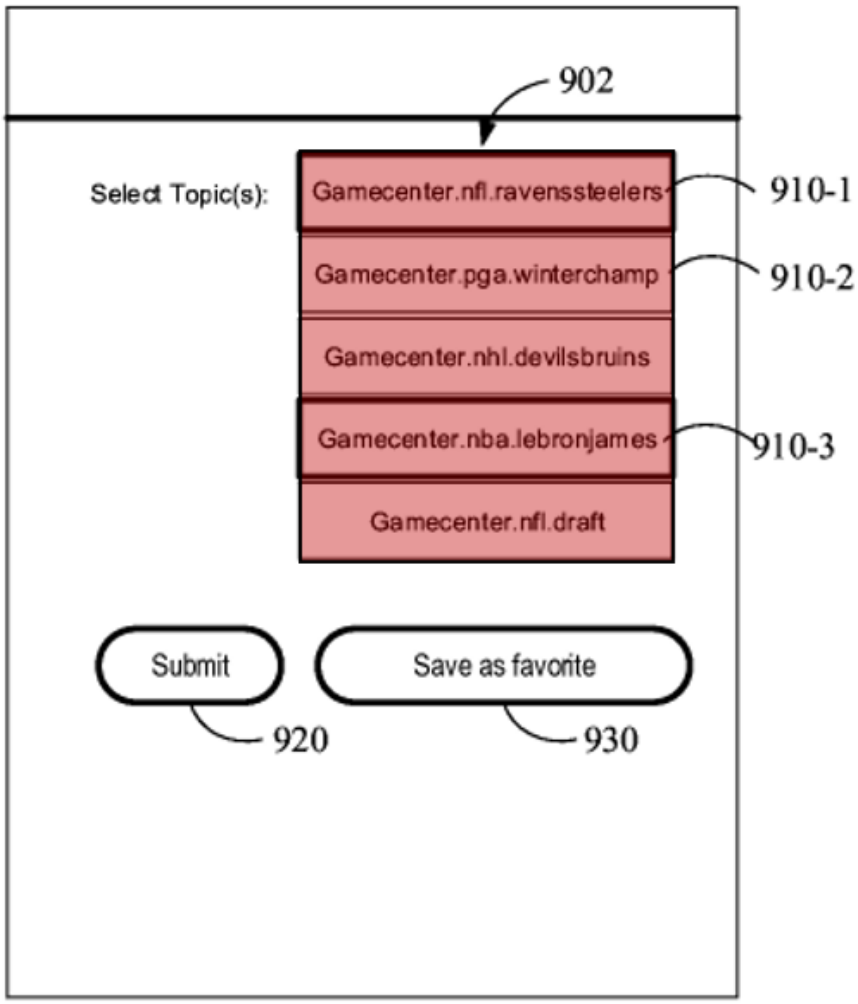

FIG. 9

[4] *See* §X.A.1.a.iii.

Id. ¶82, Fig. 9. Each URL corresponds to a specific sporting event, such as "a National Football League (NFL) game" between the Baltimore Ravens and the Pittsburgh Steelers, "a Professional Golf Association event," or a "National Basketball Association topic about player Lebron James." *Id.* ¶85. VCDs use these topic label text strings to connect and subscribe to MQSD's topic queues. *See id.* ¶¶81-84, Fig. 9. Spivey's "data payload" may be pushed to the subscribed connected devices that requested that topic. *Id.* ¶96; §§X.A.1.a.ii, X.A.1.a.iii.

179. Furthermore, as explained above, in my opinion a POSA would have understood that Ellis/Spivey's websocket connection necessarily establishes an event information communication channel that communicatively couples the client device to the event socket. *See* §X.A.1.a; Ex.1017 ¶¶87, 92.

c. Dependent Claim 14

i. **Limitation 14.0: "The method of claim 12, wherein**

in B), the at least one first instruction transmitted to the first client device includes a first address for the at least one media source, such that the first client device uses the first address to request and receive from the at least one media source the first copy of the first stream of digital content relating to the first sporting event via the first video communication channel, and displays the video relating to the first sporting event based on the received first copy of the first stream of digital content."

180. In my opinion, Ellis in view of Spivey discloses this limitation. As stated, Ellis discloses transmitting an instruction to a VCD. *See* §X.A.1.a.iii, *supra*. Spivey discloses receiving digital content via a video communication channel and ultimately displaying it on the VCD. *See* §X.A.1.a.iii, *supra*. Spivey further discloses transmitting a first address to a media source to a VCD, enabling the VCD to request and receive a stream of digital content. The topic queues in Spivey are functionally equivalent to event sockets in that they uniquely correspond to a particular event. *See* Ex.1016 ¶66. Each topic queue can carry multiple hierarchically related addresses (or "topic labels") corresponding not only to a particular event but also to specific aspects of the event, such as gaming information. *Id.* ¶104. When a client device subscribes to a topic queue, the MQSD pushes data from the topic queue to the subscriber via the internet. *Id.* ¶¶46, 179.

d. Dependent Claim 15

i. **Limitations 15.0-15.2: "The method of claim 12, further comprising:**

C) transferring first real-time information relating to the first stream of digital content to and from the first client device via a first real-time information communication channel between a first real-time information socket of the at least one socket server and the first client device,

wherein the first real-time information comprises: at least one chat message; at least one statistic; trivia; at least one poll; news or current event information; at least one photo;

advertising content; an indication of a viewer joining or leaving the first stream of digital content; at least one digital gift; and/or at least one sponsorship."

181. In my opinion, Ellis in view of Spivey discloses this limitation. Ellis discloses transmitting event information over a separate connection to user equipment. Ex.1016 ¶¶39-40, 47, Fig. 1; §VIII.B. The real-time event information can include, for example, chat messages, advertising content, a scrollable description, live score, and status updates, point spread, money line, and other wagering information, and other game-specific information. Ex.1016 ¶¶41, 72-73, 93, 126, 132, 149; Fig. 6. In my opinion, a POSA would have looked to Spivey to use websockets to reduce latency in the real-time data delivery of the event information.

e. Independent Claim 16

i. Limitation 16.0: "A method for controlling a first viewer client device to display a video relating to a first sporting event together with first online gaming information germane to the first sporting event, the method comprising:"

182. To the extent the preamble is limiting, it is my opinion that Ellis discloses this limitation. Ellis discloses a SCS providing first event information germane to the first sporting event through a "plurality of real-time data feeds," one of which can include "sports score and game status information," while the other carries "sports commentary." *Id.* ¶41. Figure 1 illustrates Ellis's SCS:

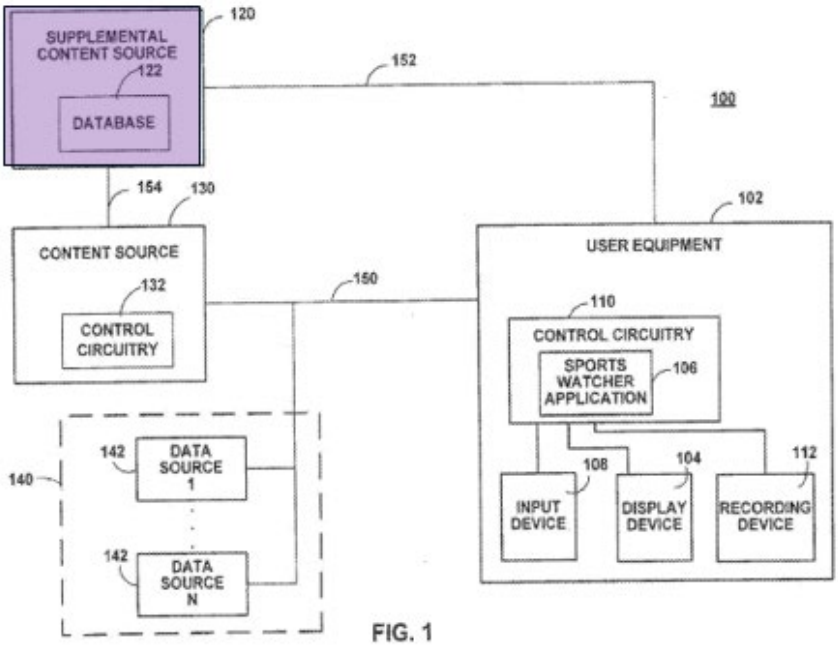

FIG. 1

Id., Fig. 1.

183. Ellis further discloses that the VCD displays the digital content it receives. *See, e.g.*, Ex.1016, Abstract (disclosing broadcasting systems for "enhanced sports-related media content access and display"); Figs. 4-5 (displaying video and online gaming information); ¶132 ("game commentary from a variety of sources may also be displayed to the user").

ii. **Limitation 16.1: "A) transmitting at least one first instruction to the first viewer client device to cause the first viewer client device to receive a first copy of a first stream of digital content relating to the first sporting event via a first video communication channel; and"**

184. In my opinion, Ellis in view of Spivey discloses this limitation. Spivey discloses receiving a digital content copy via a video communication channel between at least one media source and the VCD. For example, Spivey discloses

transmitting a first media source's internet address to establish an internet communication channel. Ex.1017 ¶82, Fig. 8. Spivey teaches that a particular MQSD's address "may resemble a uniform resource locator (URL)." *Id.* ¶82. When a client device connects and subscribes to an MQSD using these topic queues, the MQSD pushes a "data payload" carrying digital content relating to a sporting event (*e.g.*, statistics or plays) to that device. *Id.* ¶¶96, 104. The MQSD does so using "any one and the combination of wired and/or wireless networks including … the Internet." *Id.* ¶179.

185. Although Ellis does not explicitly disclose transmitting at least one instruction to the client device to cause the device to request a digital content stream, in my opinion a POSA would have considered transmitting instructions for a user "to take some action" to receive content as suggested by the '218 as an obvious marketing strategy to increase viewership of the digital content. *See, e.g.*, Ex.1009, 20:51-63. Like the '218, Ellis teaches that sports related content may include online discussion boards and chat rooms enabling the system to message end users. Ex.1016 ¶38. Spivey teaches in a similar vein that a user interface lists topics available for subscription from a message queue server. Once a user subscribes to at least one topic, the live data app sends the selected topics to the MQSD (*see* X.A.1.a.iii) requesting online gaming information updates. For example, Ellis

teaches that sports related content may include online discussion boards and chat rooms enabling the system to message end users. Ex.1016 ¶38.

186. In the alternative, Ellis discloses transmitting at least one instruction to the first client device to cause the first client device to request a first copy of a first stream of digital content relating to the first sporting event. Ex.1016 ¶¶44 ("the interactive sports watcher application is a self-executing" application downloaded to user equipment), 51-52 (user equipment executes instructions of interactive sports watcher application). Thus, a POSA would have understood that Ellis necessarily transmits instructions to the client device during a digital handshake procedure between its user equipment and media sources at the outset of a connection.

iii. **Limitation 16.2: "B) transmitting at least one second instruction to the first viewer client device to cause the first viewer client device to receive the first online gaming information via a first event information communication channel between a first event socket of at least one socket server and the first viewer client device,"**

187. In my opinion, Ellis in view of Spivey discloses this limitation. Figure 1 of Ellis illustrates that the SCS transmits "sports-related information" to user equipment over a communication path. Ellis teaches that the SCS may be any suitable content source configured to provide real-time sports information, but does not specify that the SCS is a socket server which transmits the sports-related information to the user equipment.

188. Spivey's entire system is based on providing "live event data in real time." Ex.1017, Abstract. For example, according to Spivey, client devices "may request and participate in a websocket connection," which "typically comprises a two-way connection between two entities." *Id.* ¶¶43, 61. A POSA would have known that a websocket connection is between a socket server and at least one client.

189. The '218 explains that a socket server contains "one or more first event sockets [] dedicated to the first event information." Ex.1009, 22:1-4. The first event socket has a corresponding EventID that the VCD "uses … to connect to [the] socket," *e.g.*, by using a "URL including the … EventID in a path of the URL." *Id.,* 22:5-17. Thus, a POSA would have understood a "socket" to be a uniquely addressable communication endpoint on a server where first event information is provided to a VCD. *Id*. 20:64-21:13, 22:5-25. A first event socket corresponding to the first event information germane to the first sporting event is simply a socket where information about one sporting event is provided to VCDs. *Id.*

190. Spivey's topic queues are "where data payloads are placed" that, for example, "relate to a specific game between two NFL teams." Ex.1017 ¶¶51-52. The data payloads, "[w]hen the live event is a sporting event," include, "for example, a score, a play, …, and so forth." *Id.* ¶48. Topic queues have a corresponding "topic label" which is used "to identify a topic queue." *Id.* ¶49. "A topic label may be, for example" a "text string such as 'gamecenter.nfl.ravenssteelers.'" *Id.* ¶66.

191. Client devices use these topic label text strings to connect and subscribe to MQSD's topic queues. First, client devices "request a live data connection" with the MQSD by "select[ing] or enter[ing] the address or connection information to a particular" MQSD.[5] *See id.* ¶¶81-82. This "address may resemble a uniform resource locator (URL)." *Id.* ¶82. Second, as shown in Figure 9, client devices can use the topic labels to select "the topics available from [the MQSD] in a topic selection list" and "subscribe to" those topic queues:

[5] *See* §X.A.1.e.ii.

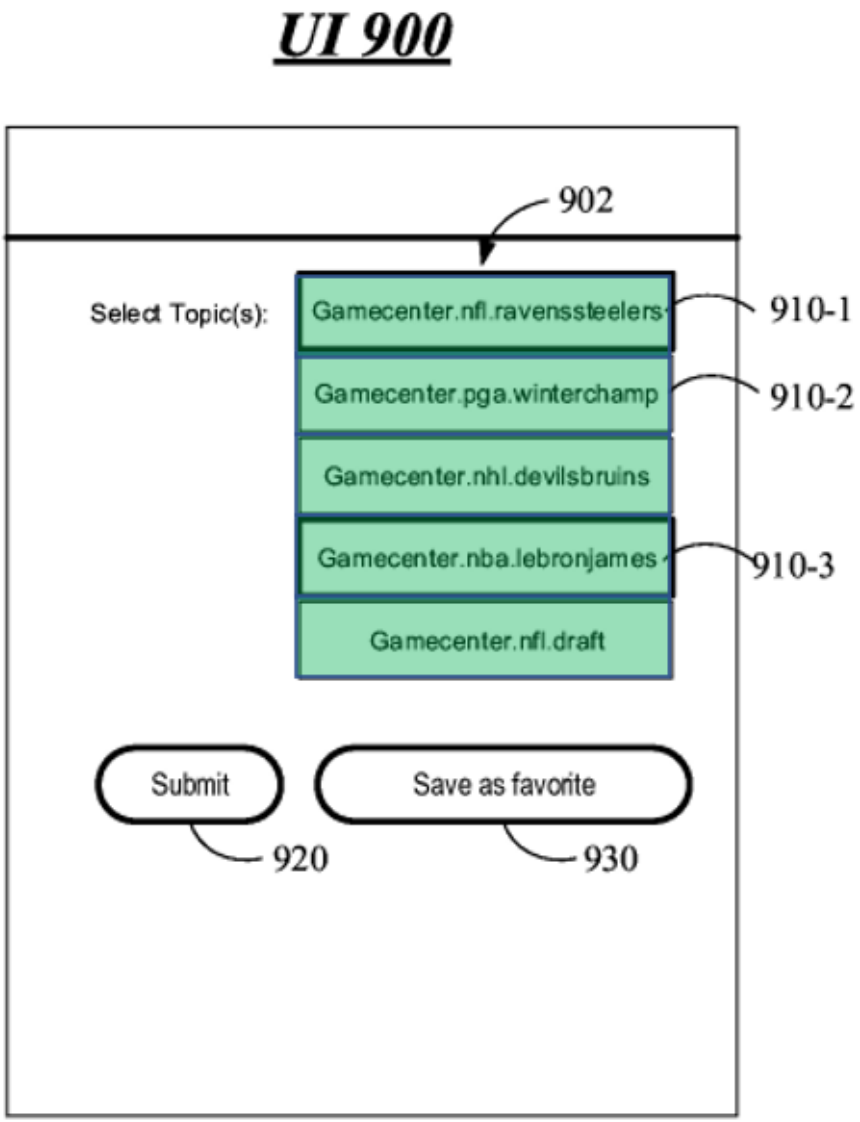

Id. ¶¶83-84, Fig. 9. Third, "the data payload" may be pushed to the subscribed connected devices that requested that topic. *Id.* ¶96. Thus, a POSA would have understood that Spivey's topic queues disclose first event sockets corresponding to the first event information germane to the first sporting event.

iv. **Limitation 16.3: "wherein the first event information communication channel is different than the first video communication channel."**

192. In my opinion, Ellis discloses this limitation. Ellis discloses that a "content source" streams "broadcast programming" to multiple different users over individual "communication path[s] 150." Ex.1016 ¶¶39-40. Meanwhile, the system provides "real-time sports scores and game summary information" to those user equipment devices from the SCS using individual communication path 152:

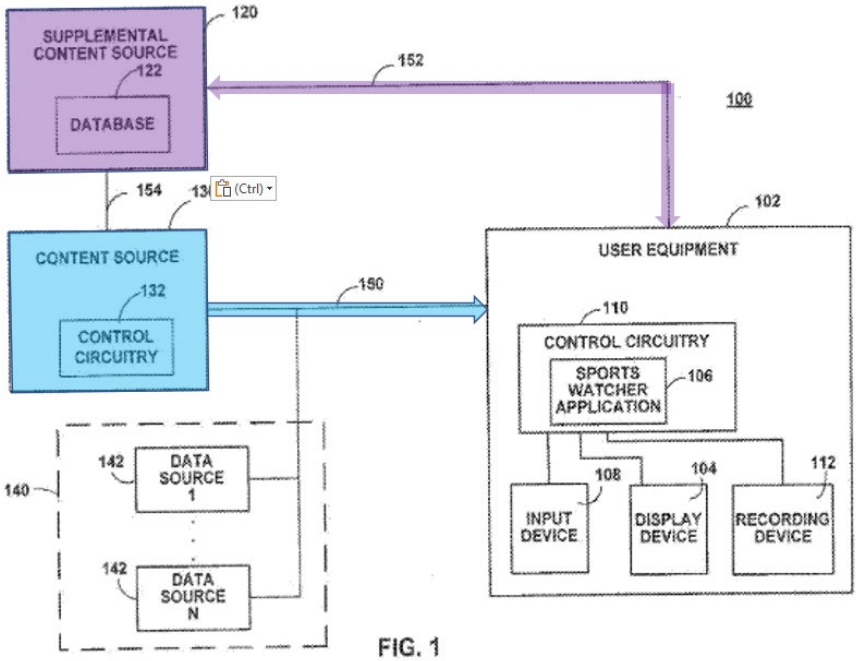

FIG. 1

Id. ¶¶39, 41, Fig. 1. Thus, a POSA would have understood that the first live stream copies of digital content in Ellis do not provide event information using video internet communication channels.

f. Dependent Claim 17

i. Limitations 17.0-17.1: "The method of claim 16, wherein

prior to A), the method comprises: receiving from the first viewer client device a first user

selection of the first sporting event from a listing of events;"

193. In my opinion, Ellis in view of Spivey discloses this limitation. As stated above, Spivey's topic labels enable VCDs to connect and subscribe to sports-related topic queues by selecting a sporting event from a list. *See* §X.A.1.e.iii, *supra*; Ex.1005 ¶¶51-52, 83-84; Fig. 9.

ii. **Limitation 17.2: "transmitting to the first viewer client device, in response to the first user selection of the first sporting event, a directory of sources generating media associated with the first sporting event; and"**

194. In my opinion, Ellis in view of Spivey discloses this limitation. As noted above, the VCD can use Spivey's topic labels to select "the topics available from [the MQSD] in a topic selection list[ing]" topic queues relating to various sporting events. *See* §X.A.1.e.iii, *supra*; Ex.1017 ¶¶51-52, 83-84; Fig. 9. Once the VCD selects a topic label, a "topic decoder ... use[s] the topic label to identify a topic queue [], and may place the data payload of the topic entry into the … topic queue." *Id.* ¶49. For streaming to the VCD the data payload is then pushed from the topic queue to the VCD through the MQSD. *Id*. ¶¶65, 96, Fig. 6; §X.A.1.e.

iii. **Limitation 17.3: "receiving from the first viewer client device a second user selection of a first source from the directory of sources generating media associated with the first sporting event,"**

195. In my opinion, Ellis in view of Spivey discloses this limitation. As noted above, after selecting a particular topic label relating to a sporting event, the VCD can "display a selection user interface element to allow the operator to select one or more topics to subscribe to." *See* §X.A.1.e.iii, *supra*; Ex.1017 ¶75; Fig. 10.

iv. **Limitation 17.4: "wherein in A), the at least one first instruction transmitted to the first viewer client device includes a first address for the first source."**

196. In my opinion, Ellis in view of Spivey discloses this limitation. As stated above, Ellis discloses transmitting instructions to a VCD. *See* §X.A.1.e.ii, *supra*. Spivey discloses transmitting "topic labels" (*i.e.*, source addresses) enabling the VCD to request initiation of a selected digital content stream. *See* §§X.A.1.e.ii, X.A.1.e.iii, *supra*; Ex.1017 ¶¶46, 104, 179.

g. Dependent Claim 18

i. **Limitations 18.0-18.1: "The method of claim 16, wherein**

in A), the at least one first instruction transmitted to the first viewer client device includes a first address for a first media source, such that the first viewer client device uses the first address to request and receive from the first media source the first copy of a first stream of digital content relating to the first sporting event via the first video communication channel, and displays the video relating to the first sporting event based on the received first copy of the first stream of digital content."

197. In my opinion, Ellis in view of Spivey discloses this limitation. As stated above, Ellis discloses transmitting an instruction to a VCD. *See* §X.A.1.e.ii, *supra*. Spivey discloses receiving digital content via a video communication channel and ultimately displaying it on the VCD. *Id*. Spivey further discloses transmitting a first address to a media source to a VCD, enabling the VCD to request and receive a stream of digital content. The topic queues in Spivey are functionally equivalent to event sockets in that they uniquely correspond to a particular event. *See* Ex.1017 ¶66. Each topic queue can carry multiple hierarchically related addresses (or "topic labels") corresponding not only to a particular event but also to specific aspects of the event, such as gaming information. *Id.* ¶104. When a client device subscribes to a topic queue, the MQSD pushes data from the topic queue to the subscriber via the internet. *Id.* ¶46, 179.

h. Dependent Claim 19

i. **Limitations 19.0-19.1: "The method of claim 18, wherein**

in B), the at least one second instruction transmitted to the first viewer client device includes a first event identifier (first Event ID) that corresponds to the first event socket, such that the first viewer client device uses a first URL including the first event identifier (first EventID) in the first URL to connect to the first event socket."

198. In my opinion, Ellis in view of Spivey discloses this limitation. Spivey discloses a user interface "to allow the operator to select or enter the address or

connection information to a particular" MQSD.[6] Ex.1017 ¶¶81-82. As shown below in Figure 9, the address "may resemble a uniform resource location (URL)."

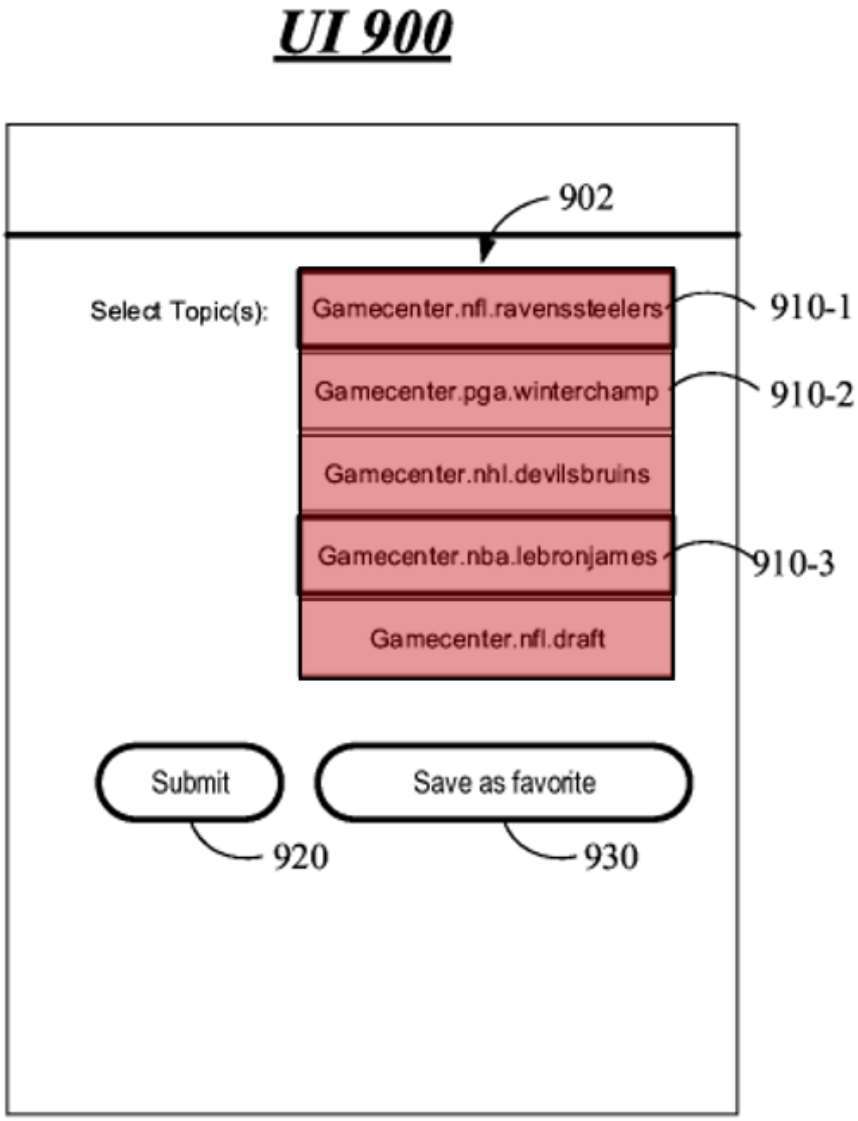

FIG. 9

Id. ¶82, Fig. 9. Each URL corresponds to a specific sporting event, such as "a National Football League (NFL) game" between the Baltimore Ravens and the

[6] *See* §X.A.1.e.ii.

Pittsburgh Steelers, "a Professional Golf Association event," or a "National Basketball Association topic about player Lebron James." *Id.* ¶85. VCDs use these topic label text strings to connect and subscribe to MQSD's topic queues. *See id.* ¶¶81-84, Fig. 9. Spivey's "data payload" may be pushed to the subscribed connected devices that requested that topic. *Id.* ¶96; §§X.A.1.e.ii, X.A.1.e.iii. Furthermore, as explained above, a POSA would have understood that Ellis/Spivey's websocket connection necessarily establishes an event information communication channel that communicatively couples the client device to the event socket. *See* §X.A.1.a; Ex.1017 ¶¶87, 92.

199. Ellis further discloses the at least one second instruction should include a first Event ID. Ellis discloses a plurality of data feeds (*i.e.*, at least one second data feed), each of which requires transmitting instructions to the VCD to initiate a stream. Ex.1016 ¶41, Fig. 1; *see* §§X.A.1.e.ii, X.A.1.e.iii, *supra*. These instructions include an Event ID. For example, to initiate a specific stream, the VCD in Ellis must select one of several "Source IDs" (*i.e.*, Event IDs), each corresponding to a video or data stream of a particular sporting event, as shown below:

220

Tuner (222)	Primary Source ID (224)
1	<sourceid_2>
2	<sourceid_1>
3	<sourceid_8>
4	<sourceid_4>

230

Source ID (232)	Type (234)	Profile Score (236)
<sourceid_1>	Game	90
<sourceid_2>	Game	95
<sourceid_3>	Commentary	45
<sourceid_4>	News	75
<sourceid_5>	Movie	25
<sourceid_6>	Movie	35
<sourceid_7>	Highlights	65
<sourceid_8>	Game	80

Ex.1016 ¶¶62-63, Fig. 2B.

200. These Event IDs enable VCDs to "tun[e] ... to the requested media content" that is ultimately "displayed to the user." *Id.* ¶62. Ellis discloses transmitting a second digital content corresponding to online gaming information to the VCD using the Event ID.

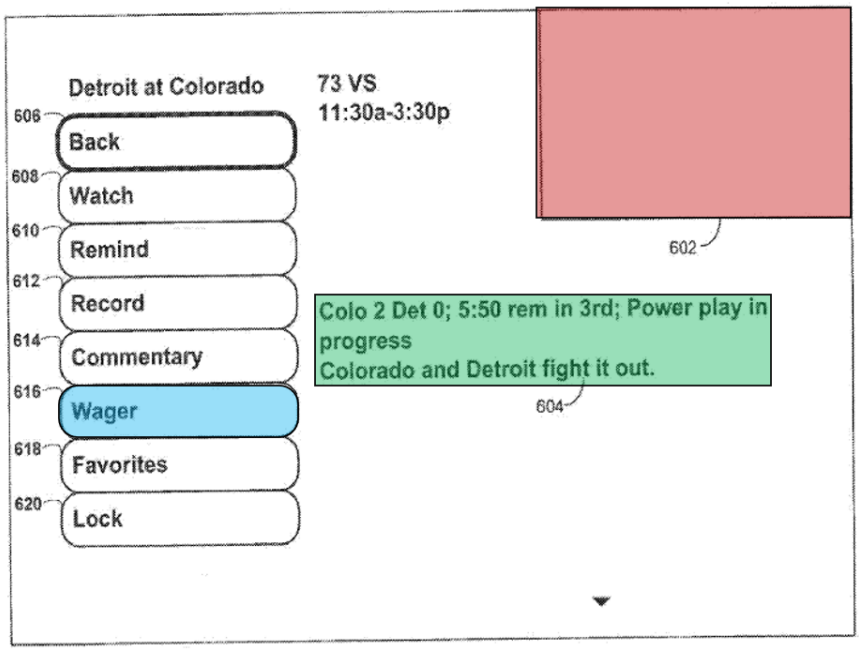

See §X.A.1.e, *supra*, §X.A.1.j.i, *infra*; Ex.1016, Fig. 6, ¶93 (VCD's "game information display screen" displays online gaming information separate from and simultaneously with a video stream).

i. Dependent Claim 20

i. **Limitations 20.0-20.1: "The method of claim 19, further comprising:**

C) receiving the first URL including the first event identifier in the first URL; and"

201. In my opinion, Ellis in view of Spivey discloses this limitation. *See* §X.A.1.h, *supra*.

ii. **Limitation 20.2: "D) establishing the first event information communication channel between the first event socket and the first viewer client device as a persistent connection."**

202. In my opinion, Ellis in view of Spivey discloses this limitation. As explained above, the first event information communication channel between the first event socket and the first VCD is established by using the websocket protocol, which uses a persistent connection. *See* §X.A.1.e.iii.

j. Independent Claim 21

i. **Limitation 21.0: "A method, comprising:**

A) transmitting first instructions to a first client device that includes at least one first display to cause the at least one first display of the first client device to render a first video relating to a first sporting event and render online gaming

information relating to the first sporting event, wherein the first instructions transmitted in A) cause the first client device to:"

203. In my opinion, Ellis discloses this limitation. Ellis discloses transmitting instructions to a VCD to cause the display to render sporting event information. *See* §§X.A.1.e.ii, X.A.1.e.iii *supra*. As to rendering sports-related video and online gaming information, specifically, Ellis discloses a VCD with a "game information display screen" that simultaneously displays a sports programming video stream and online gaming information relating to the sport in the form of a wager. Ex.1016 ¶93. Figure 6, below, illustrates the VCD display:

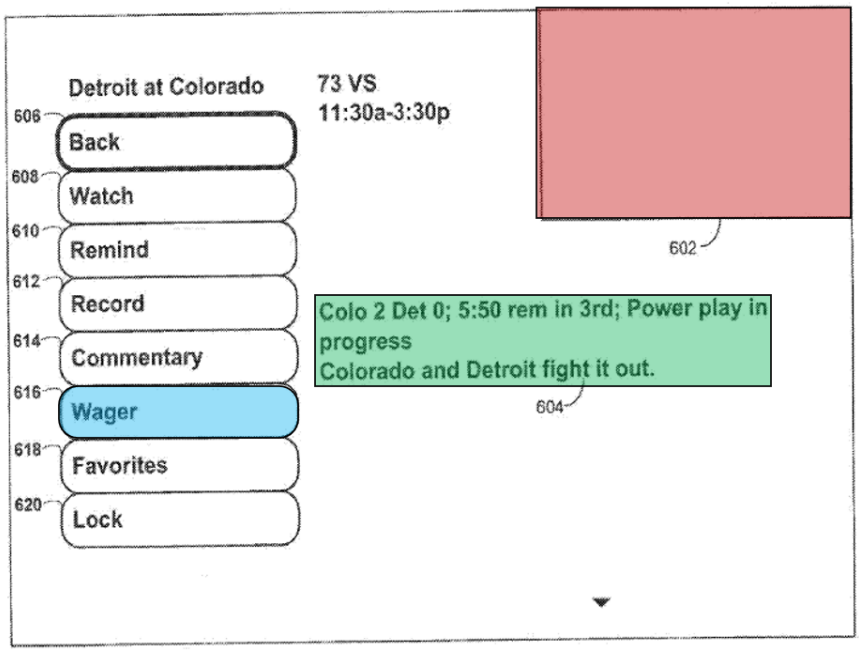

Id. Fig. 6. In this embodiment, "the game itself may be displayed in picture-in-guide (PIG) window 602" and the online gaming information may be displayed in two different ways. *Id.* ¶93. First, the flip banner 604 may "include additional live

update data" such as "a scrollable description, live score and status updates, point spread, money line, and other wagering information, and other game-specific information." *Id.* Second, a user can select the "wagering option 616" to display a "custom wagering interface" allowing the user to "wager on the game, to modify a previous wager on the game, or to view a wager previously made on the game, including any results." *Id.* ¶98.

ii. **Limitation 21.1: "receive, on a first communication channel, first digital content corresponding to the first video relating to the first sporting event;"**

204. In my opinion, Ellis in view of Spivey discloses this limitation. *See* §§X.A.1.e.i, X.A.1.e.ii.

iii. **Limitation 21.2: "render, on the at least one first display of the first client device, the first video relating to the first sporting event based on the first digital content received on the first communication channel;"**

205. In my opinion, Ellis discloses this limitation. This limitation is substantially the same as limitation 21.0. *See* §X.A.1.j.i, *supra*. This limitation differs, however, in that it further specifies that the rendered sporting event content must be based on the first digital content received on the first communication channel. Ellis discloses this, as it generally recites a system whereby "equipment device[s] receive content in the form of signals from content source[s] ... over

communication paths 150 and 152, respectively." Ex.1016 ¶39. As discussed above, this content is digital content relating to sports. *See* §X.A.1.e.i, *supra*.

iv. **Limitation 21.3: "receive, on a second communication channel different from the first communication channel, second digital content corresponding to the online gaming information; and"**

206. In my opinion, Ellis discloses this limitation. As to different communication channels, Ellis discloses this limitation for the reasons stated above. *See* §X.A.1.e.iv, *supra*. As to the second digital content corresponding to the online gaming information, the VCD's "game information display screen" in Ellis displays online gaming information separate from and simultaneously with a video stream. *See* §X.A.1.j.i, *supra*; Ex.1016, Fig. 6.

v. **Limitation 21.4: "render, on the at least one first display of the first client device, the online gaming information based on the second digital content received on the second communication channel."**

207. In my opinion, Ellis discloses this limitation. This limitation is substantially the same as limitations 21.0 and 21.2. *See* §X.A.1.j.i, X.A.1.j.iii, *supra*. This limitation differs, however, in that it further specifies that the rendered online gaming information must be based on the second digital content received on the second communication channel. As explained above, Ellis discloses a "game information display screen" that displays online gaming information separate from

the video stream using a plurality of feeds. Ex.1016 ¶93, Fig. 6. Moreover, the online gaming information is transmitted to the VCD via a second feed, or communication channel, separate from the video communication channel. *Id.* ¶¶39-40.

k. Dependent Claim 22

i. **Limitation 22.0: "The method of claim 21, wherein**

in A), the first instructions transmitted to the first client device include a first address for a first media source, such that the first client device uses the first address to request and receive from the first media source the first digital content via the first video communication channel."

208. In my opinion, Ellis in view of Spivey discloses this limitation. As stated above, Ellis discloses transmitting an instruction to a VCD. *See* §X.A.1.e.ii, *supra*. Spivey discloses receiving digital content via a video communication channel and ultimately displaying it on the VCD. *Id*. Spivey further discloses transmitting a first address to a media source to a VCD, enabling the VCD to request and receive a stream of digital content. The topic queues in Spivey are functionally equivalent to event sockets in that they uniquely correspond to a particular event. *See* Ex.1017 ¶66. Each topic queue can carry multiple hierarchically related addresses (or "topic labels") corresponding not only to a particular event but also to specific aspects of the event, such as gaming information. *Id.* ¶104. When a client device subscribes

to a topic queue, the MQSD pushes data from the topic queue to the subscriber via the internet. *Id.* ¶46, 179. *See also* §X.A.1.g.i.

l. Dependent Claim 23

i. **Limitation 23.0: "The method of claim 22, wherein**

in A), the first instructions transmitted to the first client device include a first event identifier (first Event ID) that corresponds to a source of the second digital content corresponding to the online gaming information."

209. In my opinion, Ellis in view of Spivey discloses this limitation for the reasons stated above. *See* §X.A.1.h, *supra*; §X.A.1.r, *infra*.

m. Dependent Claim 24

i. **Limitation 24.0: "The method of claim 23, further comprising**

B) receiving from the first client device a first URL including the first event identifier; and"

210. In my opinion, Ellis in view of Spivey discloses this limitation for the reasons stated above with respect to the substantially similar limitations 19.1 and 20.1. *See* §§X.A.1.h.i, X.A.1.i.i, *supra*.

ii. **Limitation 24.1: "C) establishing the second communication channel between the source of the second digital content and the first client device as a persistent connection based at least in part on B)."**

211. In my opinion, Ellis in view of Spivey discloses this limitation. This limitation is substantially similar to limitation 20.2, except that this limitation recites

a second communication channel between the source of the second digital content and VCD. *See* §X.A.1.i.ii, *supra*. Ellis discloses such a channel for the reasons stated above. *See* §X.A.1.j.iv, *supra*.

n. Dependent Claim 25

i. **Limitation 25.0: "The method of claim 21, wherein**

in A), the first instructions transmitted to the first client device cause the at least one first display of the first client device to render the online gaming information relating to the first sporting event as interactive content."

212. In my opinion, Ellis discloses this limitation. This limitation is substantially the same as limitation 21.0 and differs only in that it further recites online gaming information as interactive content. *See* §X.A.1.j.i, *supra*. Ellis discloses multiple interactive features relating to digital content. For example, Ellis discloses a "game information window" with a "flip banner" that the user can not only toggle but customize with digital sports content. Ex.1016 ¶¶71-72. Ellis also discloses a "wager" option in the flip banner that a user can select to display a "custom wagering interface" that allows the user to "wager on the game, to modify a previous wager on the game, or to view a wager previously made on the game, including any results." *Id.* ¶98.

o. Dependent Claim 26

i. **Limitation 26.0: "The method of claim 25, wherein**

in A), the first instructions transmitted to the first client device cause the first client device, when a user of the first client device interacts with the interactive content, to: launch further graphics or animations; receive additional information about the first sporting event; and/or navigate to an Internet location."

213. In my opinion, Ellis discloses this limitation. As stated above, Ellis discloses transmitting first instructions to the VCD to cause it to render information on its display when the user selects the "TV Guide" option. *See* §X.A.1.j.i, *supra*; Ex.1016 ¶103, Fig.7. Upon selecting the "TV Guide" option, an "interactive media guidance application main menu" appears, presenting the user with several options to further engage with sporting event information. *Id.* ¶103. Fig. 7, below, illustrates the options available to the user:

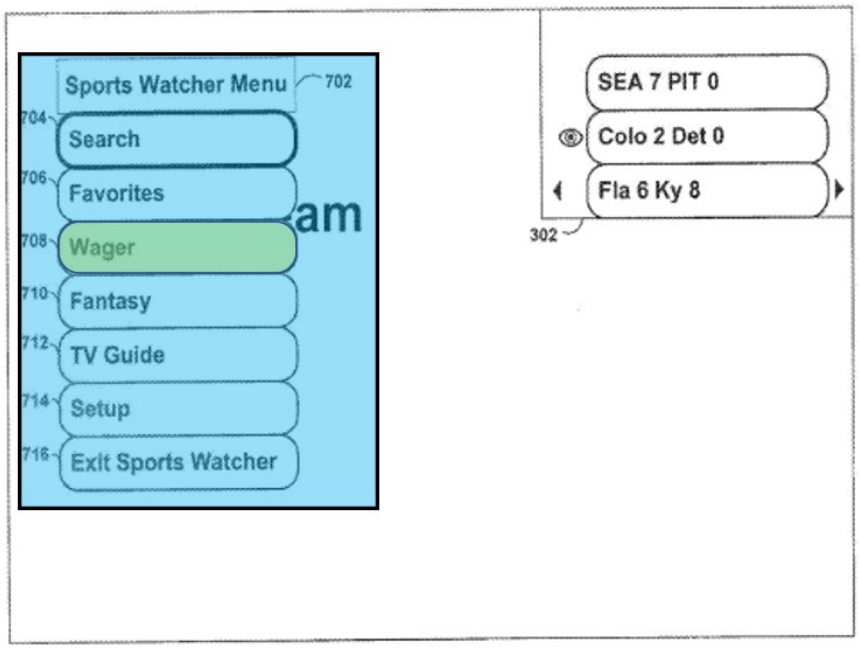

Id., Fig.7. For example, "display screen 1500 (FIG.15) may be displayed after a user selects wagering option 708." *Id.* ¶103. Fig. 15, displaying wagering information related to a first sporting event, is shown below:

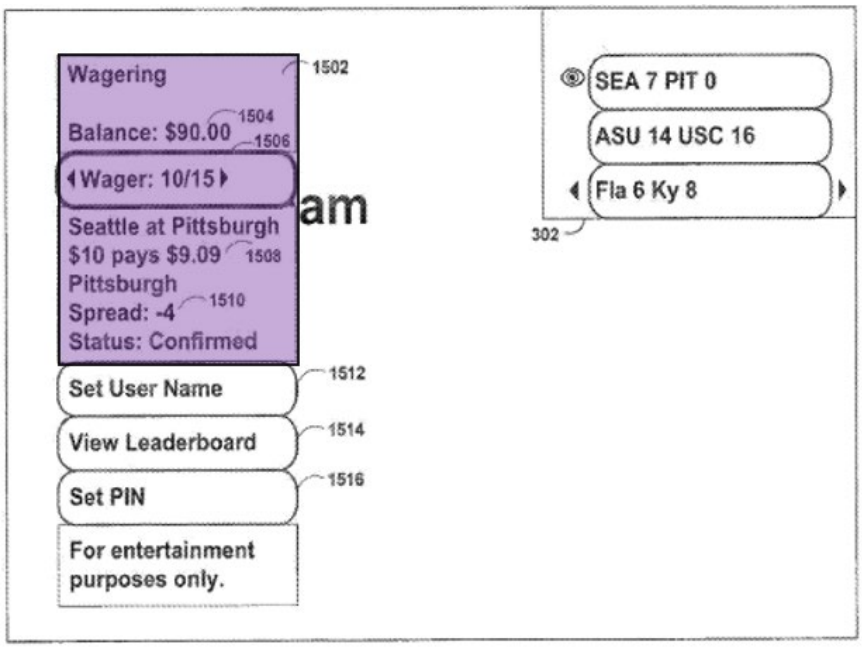

Id., Fig. 15.

214. Additionally, Ellis discloses displaying a screen that allows a user to "select any commentary option to be presented" relevant to a sporting event. *Id.* ¶132. Game commentary "may include text, graphics, video, and interactive elements (e.g., interactive playbooks, polls, and discussion forums)." *Id.,* Fig. 25, below, illustrates the game commentary menu:

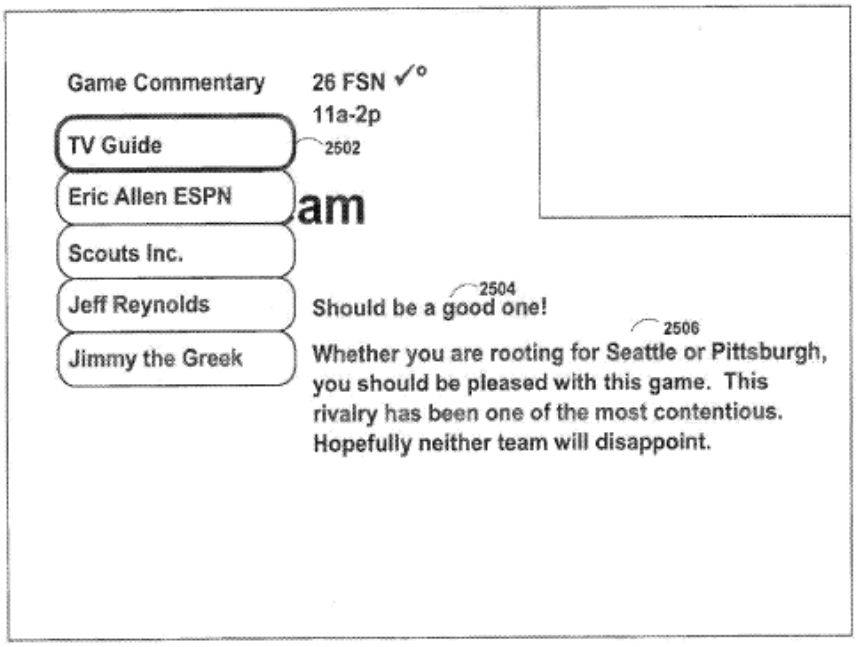

Id., Fig. 25. By selecting any option presented above, a user can access the associated spots-related commentary. *Id.* ¶132.

p. Dependent Claim 27

i. Limitation 27.0: "The method of claim 21, further comprising

B) transmitting second instructions to a second client device that includes at least one second display to cause the at least one second display of the second client device to render the first video or a second video relating to the first sporting event and render the online gaming information relating to the first sporting event, wherein the second instructions transmitted in B) cause the second client device to:"

215. In my opinion, Ellis discloses this limitation. This limitation is substantially the same as limitation 21.0, differing only in that it recites a second (rather than first) set of instructions, VCD, display, and video stream. *See* §X.A.1.j.i,

supra. In my opinion, this difference is inconsequential. Ellis teaches that "a plurality of real-time data feeds or streams" can operate simultaneously to provide digital content to one or several VCDs, each of which requires transmitting instructions from a media server, as explained above. Ex.1016 ¶¶11, 41, 141; *see* §X.A.1.e.iv.

ii. **Limitation 27.1: "receive, on a third communication channel, the first digital content corresponding to the first video relating to the first sporting event or third digital content corresponding to the second video relating to the first sporting event;"**

216. In my opinion, Ellis in view of Spivey discloses this limitation. This limitation is substantially the same as limitations 16.0, 16.1, and 21.1. *See* §§X.A.1.e.i, X.A.1.e.ii, X.A.1.j.ii, *supra*. This limitation differs in that it recites transmitting the first digital content via a third communication channel. Ellis in view of Spivey discloses a plurality of communication channels operative to transmit digital content for the reasons stated above. *See* §X.A.1.e, *supra*.

iii. **Limitation 27.2: "render, on the at least one second display of the second client device, the first video based on the first digital content or the second video based on the third digital content received on the third communication channel;"**

217. In my opinion, Ellis discloses this limitation. This limitation is substantially the same as limitations 21.0 and 21.2. *See* §§X.A.1.j.i, X.A.1.j.iii,

supra. This limitation differs in that it recites rendering digital content on a second display of a second VCD rather than a first display of a first VCD, but Ellis discloses transmitting multiple videos to multiple devices, each of which may have multiple displays opened in the "sports watcher application" over separate channels. Ex.1016 ¶¶39, 41, 93. Figure 3, below, illustrates how the sports watcher application window 300 overlays interactive scoreboard 302 onto the main window 320:

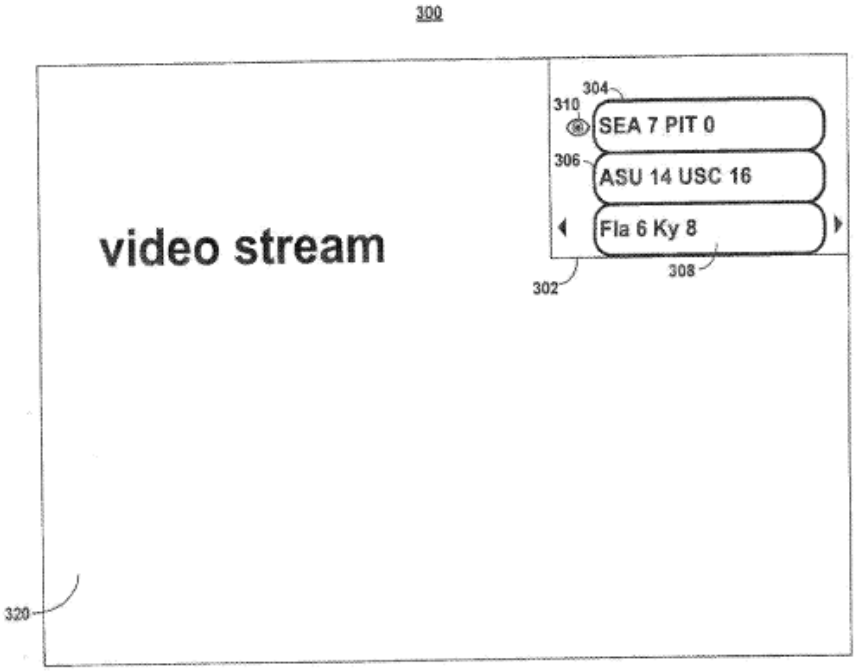

FIG. 3

Id., Fig. 3.

iv. **Limitation 27.3: "receive, on a fourth communication channel different from the third communication channel, the second digital content corresponding to the online gaming information; and"**

218. In my opinion, Ellis discloses this limitation. This limitation is substantially the same as limitation 21.3. *See* §X.A.1.j.iv, *supra*. Ellis discloses a plurality of different communication channels facilitating digital content transmission for the reasons stated above. *See* §§X.A.1.e.iv, X.A.1.j.iii, X.A.1.j.iv, *supra*.

v. **Limitation 27.4: "render, on the at least one second display of the second client device, the online gaming information based on the second digital content received on the fourth communication channel."**

219. In my opinion, Ellis discloses this limitation. This limitation is substantially the same as limitation 21.4. *See* §X.A.1.j.v, *supra*. Ellis discloses rendering online gaming information on a plurality of VCD displays via a plurality of communication channels for the reasons stated above. *See* §§X.A.1.e.iv, X.A.1.j.i, X.A.1.j.iii, X.A.1.j.v, *supra*.

q. Dependent Claim 28

i. **Limitation 28.0: "The method of claim 27, wherein**

in B), the second instructions transmitted to the second client device include the first address for the first media source or a second address for a second media source, such that the second client device uses the first address or the second address to request and receive the first digital content from the first media source or the third digital content from the second media source via the third video communication channel."

220. In my opinion, Ellis in view of Spivey discloses this limitation. This limitation is substantially the same as limitation 18.1, and differs only in that it recites a second VCD and instructions rather than a first. *See* §X.A.1.g.i, *supra*. In my opinion, this difference is inconsequential for the reasons stated above. *See* §X.A.1.p.i, *supra*.

r. Dependent Claim 29

i. **Limitation 29.0: "The method of claim 28, wherein**

in A), the second instructions transmitted to the second client device include the first event identifier (first Event ID) that corresponds to the source of the second digital content corresponding to the online gaming information."

221. In my opinion, Ellis in view of Spivey discloses this limitation. Ellis in view of Spivey discloses transmitting instructions to a second VCD to cause it to request digital content. *See* §§X.A.1.e.i, X.A.1.e.ii, *supra*. Further, Ellis discloses that these instructions can include an Event ID. For example, to initiate a specific stream, the VCD in Ellis must select one of several "Source IDs" (*i.e.*, Event IDs), each corresponding to a video or data stream of a particular sporting event, as shown below:

220

Tuner (222)	Primary Source ID (224)
1	<sourceid_2>
2	<sourceid_1>
3	<sourceid_8>
4	<sourceid_4>

230

Source ID (232)	Type (234)	Profile Score (236)
<sourceid_1>	Game	90
<sourceid_2>	Game	95
<sourceid_3>	Commentary	45
<sourceid_4>	News	75
<sourceid_5>	Movie	25
<sourceid_6>	Movie	35
<sourceid_7>	Highlights	65
<sourceid_8>	Game	80

Ex.1016 ¶¶62-63, Fig. 2B. These Event IDs enable VCDs to "tun[e] ... to the requested media content" that is ultimately "displayed to the user." *Id.* ¶62. Finally, Ellis discloses transmitting a second digital content corresponding to online gaming information to the VCD using the Event ID. *See* §X.A.1.j.iv, *supra.*

s. Dependent Claim 30

i. Limitations 30.0-30.1: "The method of claim 27, further comprising

C) transferring first real-time information relating to the first digital content to and from the first client device via a first real-time information communication channel; and"

222. In my opinion, Ellis in view of Spivey discloses this limitation. Ellis discloses transmitting event information over a separate connection to user equipment. Ex.1016 ¶¶39-40, 47, Fig.1; §X.A.1.e. The real-time event information can include, for example, chat messages, advertising content, a scrollable description, live score and status updates, point spread, money line, and other wagering information, and other game-specific information. Ex.1016 ¶¶41, 72-73, 93, 126, 132, 149; Fig. 6. In my opinion, a POSA would have looked to Spivey to

use websockets to reduce latency in the real-time data delivery of the event information.

ii. **Limitation 30.2: "D) transferring second real-time information relating to the first digital content or the third digital content to and from the second client device via a second real-time information communication channel,"**

223. In my opinion, Ellis in view of Spivey discloses this limitation. This limitation is substantially the same as limitation 30.1. *See* §X.A.1.s.i, *supra*. This limitation differs, however, in that it recites a second real-time information, VCD, and information communication channel. Ellis covers these differences, as it discloses transmitting video broadcasts over one communication path while the supplemental content source provides "game summary information, ... and any other sports-related information" to "any suitable number of users" via another communication path. Ex.1016 ¶¶39-41.

iii. **Limitation 30.3: "wherein at least one of the first real-time information or the second real-time information comprises: at least one chat message; at least one statistic; trivia; at least one poll; news or current event information; at least one photo; advertising content; an indication of a viewer joining or leaving the first digital content or the third digital content; at least one digital gift; and/or at least one sponsorship."**

224. In my opinion, Ellis discloses this limitation. Ellis teaches that users may "leave feedback regarding the commentary that other users in the media system

may view when they access the same commentary [that] ... may include … video." Ex.1016 ¶132. Ellis also teaches that to "create and send a message (e.g., instant message or email message), the user may select send message option." *Id.* ¶126. As to advertising content, Ellis discloses a system that "provides a number of opportunities for targeted advertising." *Id.* ¶140. This system operates not only by displaying general advertisements but also targeted advertisements "based on user preferences and user profile information." *Id.*

2. '218 Ground 1B: Claims 1-11 Are Obvious Over Ellis in View of Spivey and Herzog

225. For the reasons stated in Sections IX.B, above, it is my opinion that a POSA would have been motivated to combine the teachings of Ellis, Spivey, and Herzog to arrive at the claimed invention with a reasonable expectation of success.

a. Independent Claim 1

i. Limitation 1.0: "A system for controlling a plurality of viewer client devices to receive first digital content relating to a first sporting event and first event information germane to the first sporting event, the first event information including online gaming information, the system comprising:"

226. To the extent the preamble is limiting, it is my opinion that Ellis discloses this limitation. *See* Ex.1016, Abstract. Ellis further discloses this limitation for the reasons stated above. *See* §X.A.1.a.i.

ii. Limitation 1.1: "A) a control server to periodically retrieve, via the Internet, the first

event information germane to the first sporting event;"

227. Ellis discloses SCS, which are "any suitable source of media content" such as an "Internet or network media/web server, or any other suitable facility or system for originating or distributing passive or interactive content to user equipment." Ex.1016 ¶¶41 (defining a SCS as "any suitable content source configured to provide real-time sports scores and game summary information ... and any other sports-related information to user equipment 102."), 40 (defining a content source). Ellis's SCS receive a live event broadcast and distribute real-time sports content to users via communications paths. *See id.* ¶¶39-41, 45, 47. The SCS retrieve this real-time sports content on a periodic basis. *Id.* ¶¶44, 175, 182. Figure 1 shows a SCS distributing digital content to users over communication path 152:

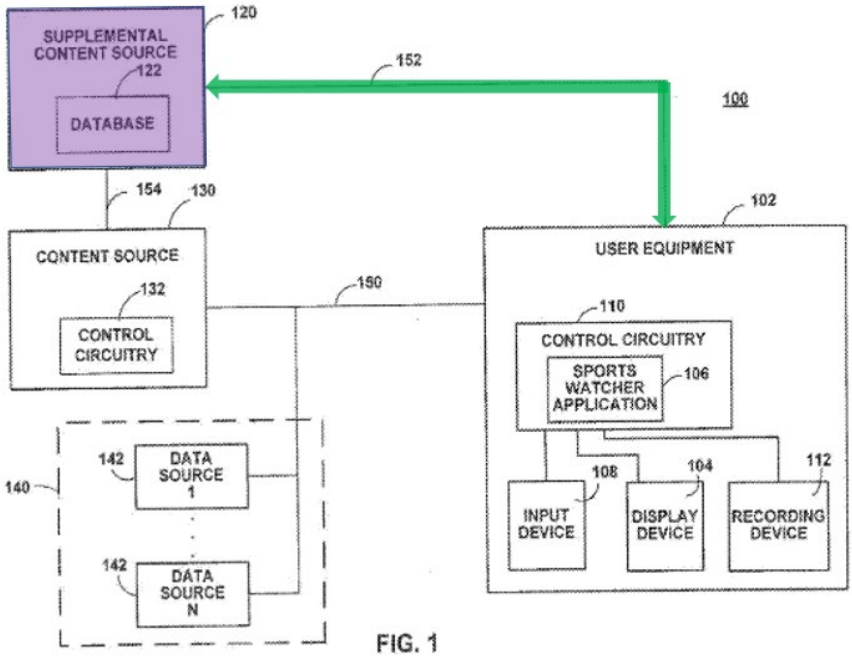

FIG. 1

Id. ¶¶39-41, Fig. 1. These communication paths facilitate Internet data transmission from content sources "configured to provide real-time sports scores and game summary information" to user equipment via "a satellite path, a fiber-optic path, a cable path, or any other suitable wired or wireless path." *Id.* ¶¶41,45.

228. To the extent Ellis's SCS does not inherently contain a control server, Spivey's live data server device ("LDSD"), as shown in Figure 4, contains the same basic components as the '218's control server:

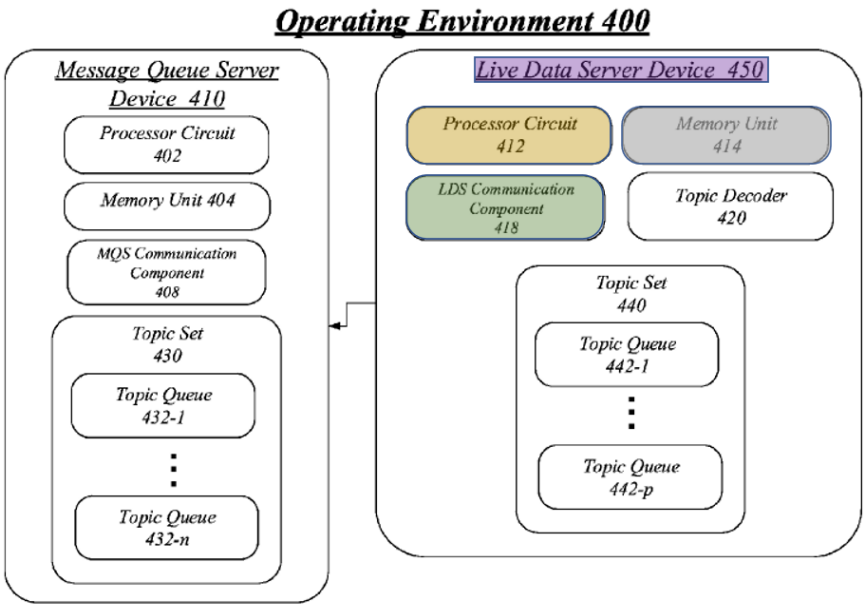

FIG. 4

Ex.1017, Fig. 4.

229. The LDSD is a generic server comprising one or more processors, memory devices, and communication interfaces. *Id.*; Ex.1009, 56:5-16. Moreover, the LDSD performs the same functions as the '218's control server. The LDSD contains an LDS communication component that allows LDSD "to receive live data

and transmit the data payloads to MQS device 410." Ex.1017 ¶55. The live data received by the LDSD includes "sports scores and breaking news" and, when related to baseball, can include "a score, a play, an error, an injury, a player-at-bat, and so forth." *See id.* ¶¶27, 48, 66 ("A data payload may include … information about the live event in progress, such as a score, a name of the player that scored or made a play, an injury, a penalty, an error, a new record set, and so forth."). The LDSD retrieves the live data over the internet from the live data source because the live data sources are "associated with the live event," and servers in Spivey communicate over the internet. *Id*. ¶¶35, 37, 178. Thus, it is my opinion that a POSA would have understood that Ellis alone, or, in the alternative, Ellis as modified by Spivey, discloses this limitation.

iii. **Limitation 1.2.1: "B) at least one socket server communicatively coupled to the control server to: receive from the control server at least the first event information; and"**

230. In my opinion, Ellis in view of Spivey discloses this limitation for the reasons stated above. *See* §X.A.1.a.ii, *supra*.

iv. **Limitations 1.2.2-1.2.3: "transmit at least some of the first event information, including the online gaming information, to at least a first viewer client device of the plurality of viewer client devices via a first event information Internet communication channel between a first event socket of the at least one socket server and the first viewer client device,**

wherein the first event socket corresponds to the first event information germane to the first sporting event; and"

231. In my opinion, Ellis in view of Spivey discloses this limitation for the reasons stated above. *See* §X.A.1.a.ii, *supra*.

v. **Limitation 1.3.1: "C) at least one webserver communicatively coupled to the at least one socket server to transmit, to the first viewer client device: a first Internet address of a first media source to establish a first video Internet communication channel between the first media source and the first viewer client device to carry the first digital content relating to the first sporting event; and"**

232. In my opinion, Ellis in view of Spivey and Herzog disclose this limitation. As explained above, Herzog's application server (*i.e.,* a "webserver") is communicatively coupled to Ellis/Spivey's socket server to transmit media source addresses to the viewer client devices to establish video communication channels. *See* §§IX.B, X.A.1.a.iii, *supra*.

vi. **Limitation 1.3.2: "a first socket address of the first event socket to establish the first event information Internet communication channel to carry the online gaming information."**

233. In my opinion, Ellis in view of Spivey and Herzog disclose this limitation for the reasons stated above. *See* §X.A.1.c.i, *supra*.

b. Dependent Claim 2

i. **Limitations 2.0-2.1: "The system of claim 1, wherein**

the first socket address transmitted by the at least one webserver to the first viewer client device includes a first event identifier (first EventID) that corresponds to the first event socket, such that the first viewer client device uses a first URL including the first event identifier (first EventID) in the first URL to connect to the first event socket."

234. In my opinion, Ellis in view of Spivey and Herzog discloses this limitation. As explained above, a POSA would have considered it obvious to combine Herzog's application server with the content source in Ellis, which can be an "[i]nternet or network media/webserver." Ex.1016 ¶40; *see* §X.A.2.a.v, X.A.1.a.ii, *supra*. Furthermore, as explained above, Spivey discloses the first socket address includes an EventID that corresponds to the first event socket, such that the first VCD uses a first URL including the first EventID in the first URL to connect to the first event socket. *See* §X.A.1.b.

c. Dependent Claim 3

i. **Limitations 3.0-3.1: "The system of claim 1, wherein**

the first event information Internet communication channel to carry the online gaming information between the first event socket of the at least one socket server and the first viewer client device is established as a persistent connection."

235. In my opinion, Ellis in view of Spivey discloses this limitation. As explained above, the first event information Internet communication channel

between the socket server and the first VCD is established by using the websocket protocol, which uses a persistent connection. *See* §§IX.A.1, X.A.1.a.ii.

d. Dependent Claim 4

i. **Limitations 4.0-4.1: "The system of claim 1, wherein**

in C), the at least one webserver transmits, to a second viewer client device of the plurality of viewer client devices, the first socket address of the first event socket to establish a second event information Internet communication channel between the first event socket and the second viewer client device; and"

236. In my opinion, Herzog discloses this limitation. As stated above with respect to limitation 1.3.1, Herzog discloses a webserver transmitting to a second VCD. *See* §X.A.2.a.v, *supra*. This limitation differs in that it recites a webserver transmitting to a second VCD rather than a first, but Spivey discloses a first socket address to establish a first event information internet communication channel, and a POSA looking to Ellis would have understood that a socket address can establish a second, separate channel. *Id.* ¶¶39-40; *see* §§X.A.2.a.vi, X.A.1.a.iv, *supra*. Moreover, Spivey teaches that information is transmitted via a connection between a topic queue and the first user equipment device, which users can access using a URL. *See* Ex.1017 ¶¶81-82. The user can then access the specific topic queue she wishes to receive information from by using a text string (*e.g.*, a topic label or Event ID) associated with a topic queue. *Id.* ¶78, Fig. 9; §X.A.1.a.

ii. **Limitations 4.2: "in B), the at least one socket server transmits at least some of the first event information, including the online gaming information germane to the first sporting event, to the second viewer client device via the second event information Internet communication channel, such that the online gaming information is shared in a synchronized manner by the first viewer client device and the second viewer client device."**

237. In my opinion, Ellis in view of Spivey discloses this limitation. This limitation is substantially the same as limitations 1.2.1-3, which Ellis and Spivey disclose for the reasons stated above. *See* §§X.A.2.a.iii, X.A.2.a.iv, *supra*. This limitation adds, however, that the online gaming information is shared in a synchronized manner between VCDs. Spivey discloses this, as it teaches that "the embodiments discussed herein may reduce [] delay to an order of milliseconds (ms) (e.g., 100ms) or less, providing a significant advantage over the conventional practices." Ex.1017 ¶28. Spivey further teaches that digital content "may be pushed to the subscribed connected client devices substantially simultaneously with ... a time delay of 100 milliseconds or less." *Id.* ¶96. According to Spivey, "'substantially simultaneously' means that the set of actions execute within the same defined period of time. The defined period of time may be of any length as suitable for a given implementation." *Id.*

e. Dependent Claim 5

i. **Limitation 5.0: "The system of claim 4, wherein**

the first socket address transmitted by the at least one webserver to the second viewer client device includes the first event identifier (first EventID) that corresponds to the first event socket, such that the second viewer client device uses a second URL including the first event identifier (first EventID) in the second URL to connect to the first event socket."

238. In my opinion, Ellis in view of Spivey and Herzog discloses this limitation. This limitation is substantially the same as limitation 2.1. *See* §X.A.2.b.i, *supra*. This limitation differs, however, in that it recites a second VCD using a second URL, rather than a first VCD using a first URL, to connect to the event socket. This difference is negligible, given that Ellis discloses transmitting sporting event information to a "number of users [that] may have one or more user equipment devices ... ." Ex.1016 ¶39.

f. Dependent Claim 6

i. **Limitations 6.0-6.1: "The system of claim 4, wherein**

in A), the control server is a single point of entry for the system to obtain the first event information including the online gaming information to reduce synchronization errors between the first viewer client device and the second viewer client device."

239. In my opinion, Ellis alone, or Ellis in view of Spivey, discloses a control server, as set forth above for claim 1.1, which obtains and transmits online gaming information to VCDs. *See* §X.A.2.a.ii. Both Ellis's SCS and Spivey's LDSD

are a single point of entry for the system to obtain this online gaming information. *See* §§IX.B, X.A.2.a.ii, X.A.1.a.ii; Ex.1016 Fig. 1; Ex.1017, Fig. 4. Spivey pushes digital content to VCDs "substantially simultaneously . . . e.g., with a time delay of 100 milliseconds or less . . . .". Ex.1017 ¶96.

g. Dependent Claim 7

i. Limitations 7.0-7.1: " The system of claim 6, wherein

in A), the control server detects a change in status in the first event information and transmits changes in the online gaming information to the at least one socket server; and"

240. In my opinion, Ellis in view of Spivey and Herzog discloses these limitations. To the extent Ellis/Spivey does not explicitly disclose that its control server detects a change in status, in my opinion, it would have been obvious to a POSA that the control server does detect a change in status, as confirmed by Herzog, for example Herzog discloses a socket server communicatively coupled to an ERP server, or control server, which receives "the request for meta-data with the ... time stamp" then "transmits the meta-data with a corresponding .JSON time stamp of the live event" to the socket server. Ex.1015 ¶¶50, 75-76; *see* §X.A.2.a.v, *supra* (equating Herzog's "origin server" to the '218's "socket server"). Herzog's time stamps are essential to tracking the status of each parameter continuously received and monitored by the ERP server. Ex.1015 ¶75. The telemetry data transmitted

from the ERP server to the socket server "may include varying parameters regarding the status of each car and driver in the race," as an example, and may include "as many as 50 different parameters that are available for monitoring of each race car ... ." *Id.* ¶45. As explained above, changes in telemetry data status are ultimately transmitted from the ERP server to the socket server. *See* §X.A.2.a.v, *supra*. Thus, given Herzog's teachings, it is my opinion that a POSA would have been motivated to incorporate the detection functionality of Herzog into Ellis/Spivey to allow users to access up-to-date event information, and that doing so would have been well within the skill of a POSA. To the extent that Herzog's telemetry data does not constitute online gaming information, it is my opinion that a POSA would have considered it obvious to cover such information in view of Spivey, teaching that topic queues can push sporting event payload data "corresponding not only to a particular event but also to specific aspects of the event." Ex.1017 ¶104; *see* X.A.2.a.vi, *supra*.

ii. **Limitations 7.2: "in B), the at least one socket server transmits the changes in the online gaming information to the first viewer client device and the second viewer client device via the first event socket to provide a single synchronized update and mitigate client-by-client latency and/or synchronization issues."**

241. In my opinion, Ellis in view of Spivey and Herzog discloses this limitation. Ellis in view of Spivey discloses a socket server transmitting online

gaming information to a plurality of VCDs via a first event socket for the reasons stated above. *See* §X.A.2.a.iv, *supra*. Given that Spivey recites a websocket connection (*i.e.*, a bi-directional, full-duplex, and continuous connection), this data transmission would include not only the online gaming information but also changes in that information as contemplated by Herzog. Ex.1017 ¶27; *see* §X.A.2.g.i, *supra*. Both Spivey and Herzog leverage this network architecture to provide synchronized data and mitigate latency. Ex.1015 ¶66 (disclosing a system "for synchronizing two different types of data that are streamed at different rates with different latencies ... ."); Ex.1017 ¶96 (disclosing a system in which data "may be pushed to the subscribed connected client devices substantially simultaneously" in parallel, where "'substantially simultaneously' means that the set of actions execute within the same period of time ... ."). In other words, these updates would be a single synchronized update and mitigate client-by-client latency and/or synchronization issues. Ex.1043 at 48 ("This technology allows to develop real time synchronization between multiple users over the Internet …."), ("The master sends [] information to the WebSocket server which broadcasts the same message to all the connected users.").

h. Dependent Claim 8

i. **Limitation 8.0: "The system of claim 4, wherein in C), the at least one webserver transmits to the second viewer client device one of: the first address of the first media source to establish a second video Internet communication channel**

between the first media source and the second viewer client device to receive the first digital content relating to the first sporting event; or a second address of a second media source to establish an alternate second video Internet communication channel between the second media source and the second viewer client device to receive second digital content relating to the first sporting event."

242. In my opinion, Herzog discloses this limitation. This limitation is substantially the same as limitation 1.3.1. *See* §X.A.2.a.v, *supra*. This limitation differs only in that it recites a second VCD and internet communication channel rather than a first, but Herzog discloses this as a "system of a network/devices that provides various communications for mobile devices" via "different communication paths" in an "HTTP format." Ex.1015 ¶¶6, 16, 47. To the extent that Herzog does not disclose a second VCD or internet communication channel, a POSA would have considered it obvious in view of Ellis and Spivey for the reasons stated above. *See* §IX.A *supra*.

i. Dependent Claim 9

i. **Limitations 9.0-9.1: "The system of claim 8, wherein**

the second client device is a subscriber to one of: the first media source and/or the first digital content relating to the first sporting event; or the second media source and/or the second digital content relating to the first sporting event; and"

243. In my opinion, Ellis in view of Spivey and Herzog discloses this limitation. Ellis in view of Herzog discloses a second VCD, first media source, and first digital content relating to the first sporting event for the reasons stated above. *See* §X.A.2.h, *supra*. Spivey teaches that a VCD can be a subscriber to the media source of digital content. For example, Spivey describes topic label text strings to connect and subscribe to MQSD's topic queues. Ex.1017 ¶¶131, 134; *see* §X.A.1.a.ii, X.A.1.a.iii, *supra*. After selecting a particular topic label relating to a sporting event, the VCD can "display a selection user interface element to allow the operator to select one or more topics to subscribe to." *See* §X.A.1.a.ii, X.A.1.a.iii, *supra*; Ex.1017 ¶75; Fig. 10.

ii. **Limitation 9.2: "in C), the at least one webserver transmits to the second viewer client device one of: a first identifier (first StreamID) for the first media source and/or the first digital content as at least a portion of the first address if the second client device is a subscriber to the first media source and/or the first digital content; or a second identifier (second StreamID) for the second media source and/or the second digital content as at least a portion of the second address if the second client device is a subscriber to the second media source and/or the second digital content."**

244. In my opinion, Ellis in combination with Spivey and Herzog discloses this limitation. As explained above with respect to the webserver, it is my opinion that a POSA would have considered it obvious to combine Herzog's application

server with Ellis's content source, which can be an "[i]nternet or network media/webserver." Ex.1016 ¶40; s*ee* §§X.A.2.a.v, X.A.2.b.i, *supra*. This webserver would be operative to stream digital sports-related digital content to a plurality of VCDs. *See* §X.A.2.a.iv, *supra*. To communicate with the webserver, Spivey teaches that a VCD may use a URL containing a topic label text string to connect and subscribe to MQSD's topic queues. Ex.1017 ¶¶81-82; Fig. 9; §X.A.1.a. This URL, or media source StreamID, contains a portion indicating the type of digital content the VCD can expect to receive and display if it subscribes to the media source (*e.g.*, "Gamecenter.nfl.ravenssteelers" to indicate an NFL game, "Gamecenter.pga.winterchamp" to indicate a PGA event, etc.). *Id.* ¶85.

j. Dependent Claim 10

i. **Limitations 10.0-10.1: "The system of claim 1, wherein**

in B), the at least one socket server further transmits first real-time information relating to the first digital content to at least the first viewer client device of the first plurality of viewer client devices via a first real-time information Internet communication channel between a first real-time information socket of the at least one socket server and the first viewer client device, wherein the first real-time information socket corresponds to the first digital content relating to the first sporting event; and"

245. In my opinion, Ellis in view of Spivey discloses this limitation. As described with respect to limitation 1.2.1, Ellis in view of Spivey discloses a socket

server transmitting real-time information. *See* §X.A.2.a.iii, *supra*. Although limitation 1.2.1 does not further specify that the information should relate to the first digital content, it is my opinion that a POSA would have understood this to be the case because the information in Spivey is eventually transmitted to a VCD as digital content. Ex.1017 ¶96. Moreover, for the reasons stated above, Ellis in view of Spivey discloses transmitting real-time information to at least the first VCD of a plurality via a real-time information Internet communication channel. *See* §X.A.2.d.ii, *supra*. Ellis also discloses transmitting this information from content sources "configured to provide real-time sports scores and game summary information" to user equipment. Ex.1016 ¶45.

ii. **Limitation 10.2: "in C), the at least one webserver transmits to the first viewer client device a second socket address of the first real-time information socket to establish the first real-time information Internet communication channel."**

246. This limitation is substantially the same as the limitation 4.1 with two exceptions. *See* §X.A.2.d.i, *supra*. First, it discloses a first VCD and second socket address, rather than a second VCD and first socket address. Given that Ellis discloses transmitting multiple streams of digital content to multiple different users, it is my opinion that a POSA would have considered it obvious to have a webserver transmit to either a first or second VCD a first or second socket address. Ex.1016 ¶¶39, 94.

247. Second, this limitation specifies that the information socket and Internet communication channel should operate in real-time. Ellis discloses a multiple-sporting-event system that retrieves real-time data for all events. *Id.* ¶41 (disclosing that "sports-related information is provided to user equipment [] as a plurality of real-time data feeds" and "[e]ach data feed may be individually accessed or subscribed to by user equipment").

k. Dependent Claim 11

i. **Limitation 11.0: "The system of claim 10, wherein**

the first real-time information relating to the first digital content comprises: at least one chat message; at least one statistic; trivia; at least one poll; news or current event information; at least one photo; advertising content; an indication of a viewer joining or leaving the first digital content; at least one digital gift; and/or at least one sponsorship."

248. In my opinion, Ellis discloses this limitation for the same reasons stated above. *See* §X.A.1.d.i, *supra*.

3. '218 Ground 2A: Claims 21-22 and 27-28 Are Anticipated by Herzog

249. Claims 21-22 and 27-28 are anticipated by Herzog under 35 U.S.C. §102 for the reasons stated below.

a. Independent Claim 21

i. **Limitation 21.0: "A method, comprising: A) transmitting first instructions to a first client**

device that includes at least one first display to cause the at least one first display of the first client device to render a first video relating to a first sporting event and render online gaming information relating to the first sporting event, wherein the first instructions transmitted in A) cause the first client device to:"

250. Herzog discloses a system and method for viewing multiple videos related to the same sporting event in addition to information about the event (meta-data). For example, Herzog's Figure 7 shows "four different videos of a live event and meta-data of multiple parameters" from which a user can select:

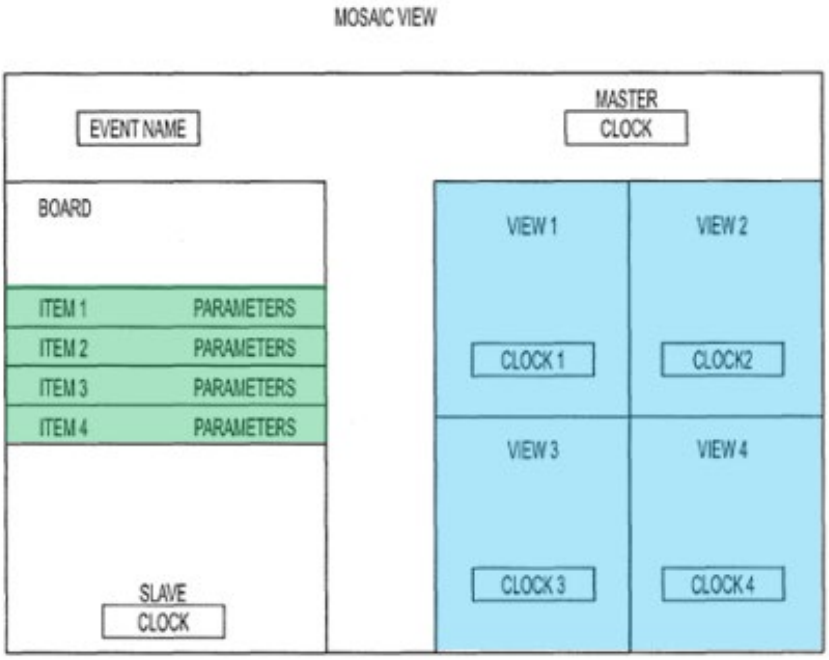

FIG. 7

Ex.1015 ¶¶12, 80-81, Fig.7. Herzog provides these video and data streams over separate connections:

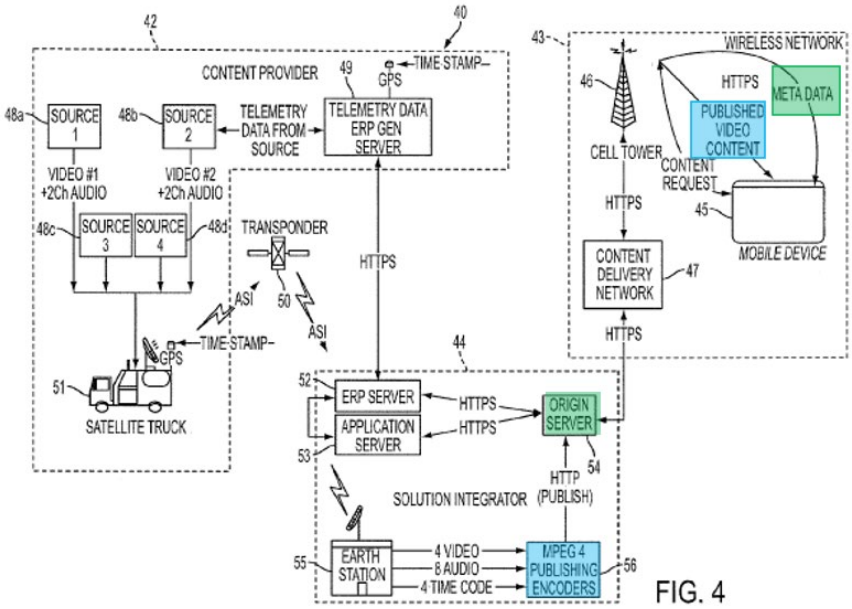

FIG. 4

Ex.1015 ¶¶48-52, 67, Figs. 4, 6. However, a POSA would have known that the websocket client-server communication protocol employed by Spivey was an alternative to the HTTP polling used by Herzog. Ex.1046; §IX.C.1, *supra*. As noted above, a POSA would have understood that socket servers were well-known components for implementing real-time data delivery, such as in Herzog, with reduced latency. §§IX.A.1, IX.B.1, IX.C.1, *supra*; Ex.1017 ¶¶96, 35.

251. Herzog's primary embodiment includes providing "multiple video/audio streams of race cars and drivers [*i.e.*, sources 48a-d], as they are imaged at different locations on the race track[.]" Ex.1015 ¶45, Fig 4. Herzog further contemplates streaming any sporting event. *Id.* ¶16. This system makes these video feeds available to "mobile stations" and other "similar users." *Id.* ¶19. Each user can then request video from "one or more channels of video/audio for viewing a live

event." *Id*. ¶70. The user then "receives both the video/audio stream in an HTTPS Live Streaming (HLS)-based media streaming communications protocol." *Id.* ¶51. Thus, in my opinion Herzog provides a system where multiple different users can select the same, or different, live stream of digital content that relates to a live sporting event.

252. Herzog also provides event information germane to the sporting event. Specifically, Herzog transmits "meta-data" such as "the status of each car and driver in the race" and may include "lap number, car speed and acceleration" but there may be as many as "50 different parameters that are available." Ex.1015 ¶45. In my opinion, a POSA would have understood such parameters to include online gaming information.

253. To the extent Herzog does not specifically describe the act of transmitting at least one instruction to the client device to cause the device to request a digital content stream, it is my opinion that a POSA would have understood that transmitting instructions is inherent in the connection made between a client device and an origin server and/or ERP server prior to a live stream. Specifically, I believe a POSA would have understood that instructions are necessarily transmitted to the client device during a digital handshake procedure between a client device and origin server and/or ERP server at the outset of a connection.

ii. **Limitation 21.1: "receive, on a first communication channel, first digital content**

corresponding to the first video relating to the first sporting event;"

254. As shown below in Figure 6, Herzog discloses a client device receiving digital video content relating to a sporting event on a first communication channel after making a "user video request":

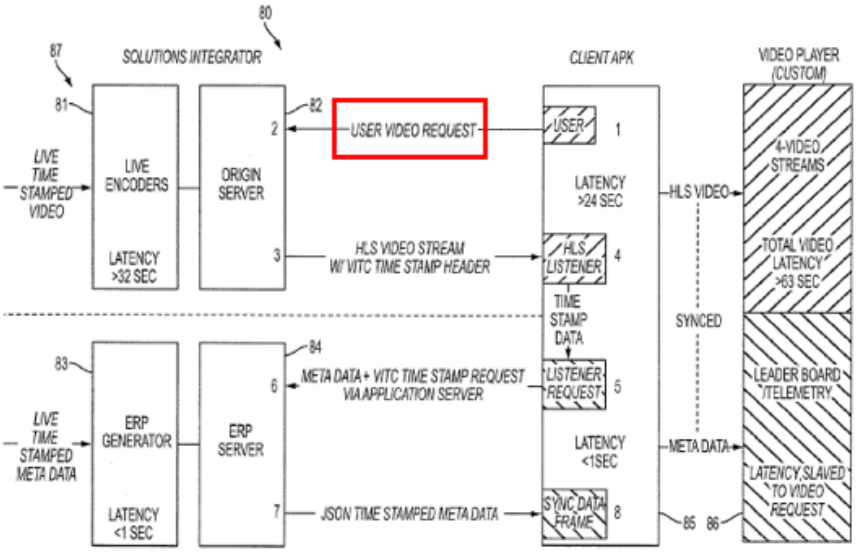

FIG. 6

Ex.1015, Fig. 6; *see also* Fig. 7 (displaying video stream). Herzog makes clear that a client device receives such video content via a communication channel, as it discloses that "it may be desirable for a user to view video that is streamed live from the Internet to a client player using HTTP Live Streaming (also known as HLS) communications protocol." *Id.* ¶3.

iii. **Limitation 21.2: "render, on the at least one first display of the first client device, the first video relating to the first sporting event based on the first digital content received on the first communication channel;"**

255. In my opinion, Herzog discloses this limitation for the same reasons stated above. *See* §X.A.3.a, *supra*.

iv. **Limitation 21.3: "receive, on a second communication channel different from the first communication channel, second digital content corresponding to the online gaming information; and"**

256. Herzog discloses providing event information over a separate communication path than the video signal where there is "a unique video and meta-data source that do not follow the same path of transmission" in Figure 5, below:

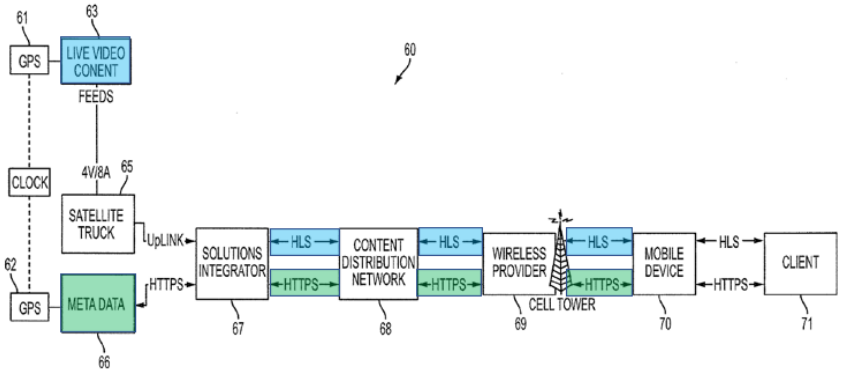

FIG. 5

Ex.1015 ¶¶47-51, 83, Figs. 1, 4, 6. Herzog further discloses that "[a]s part of the synchronization service, server 25 may provide one type of data, for example, audio and video data of a live event; a second type of data for example, meta-data of the same event, may be provided by server 31. Both types of data may flow to a mobile device 13b through one or more networks, for example, network 29, Internet 23 and/or mobile traffic network 15." *Id.* ¶27. Figure 1 is shown below:

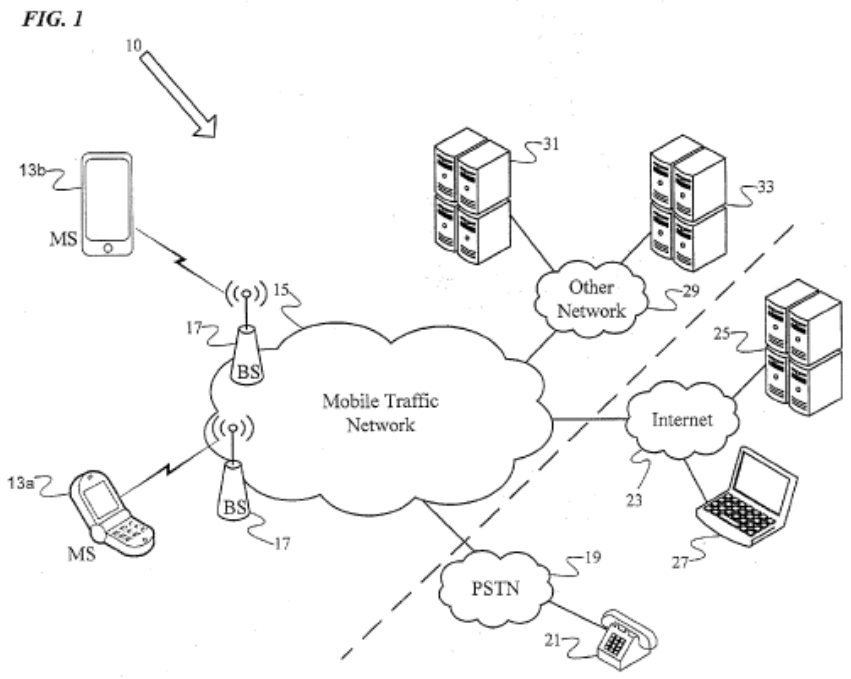

Id., Fig. 1.

v. **Limitation 21.4: "render, on the at least one first display of the first client device, the online gaming information based on the second digital content received on the second communication channel."**

257. In my opinion, Herzog discloses this limitation for the reasons stated above. *See* §X.A.3.a, *supra*.

b. Dependent Claim 22

i. **Limitation 22.0: "The method of claim 21, wherein**

in A), the first instructions transmitted to the first client device include a first address for a first media source, such that the first client device uses the first address to request and receive from the first media source the first digital content via the first video communication channel."

258. Herzog discloses a media source server address when describing the type of content a client device may store. Ex.1015. ¶35 ("The memories 114, 116 also store various data, such as telephone numbers and server addresses ... ."). To the extent Herzog does not explicitly reference a media source address, it is my opinion that a POSA would have understood that the system in Herzog necessarily requires such an address to stream digital content corresponding to the online gaming information from the media source to the client device. Specifically, I believe a POSA would have understood that Herzog's HTTPS communication format uses the Transmission Control Protocol (TCP) (it is required by the standard), which in turn uses the Internet Protocol (IP) (further required for communication over the Internet). These protocols require an IP address (*i.e.*, Internet address such as 130.24.20) to designate the location from which client devices can receive requested digital content.

c. Dependent Claim 27

i. **Limitation 27.0: "The method of claim 21, further comprising**

B) transmitting second instructions to a second client device that includes at least one second display to cause the at least one second display of the second client device to render the first video or a second video relating to the first sporting event and render the online gaming information relating to the first sporting event, wherein the second instructions transmitted in B) cause the second client device to:"

259. Herzog discloses this limitation for the reasons stated above. *See* §X.A.3.a, *supra*. Herzog further discloses a plurality of communication channels carrying video content, as shown below in Figure 7:

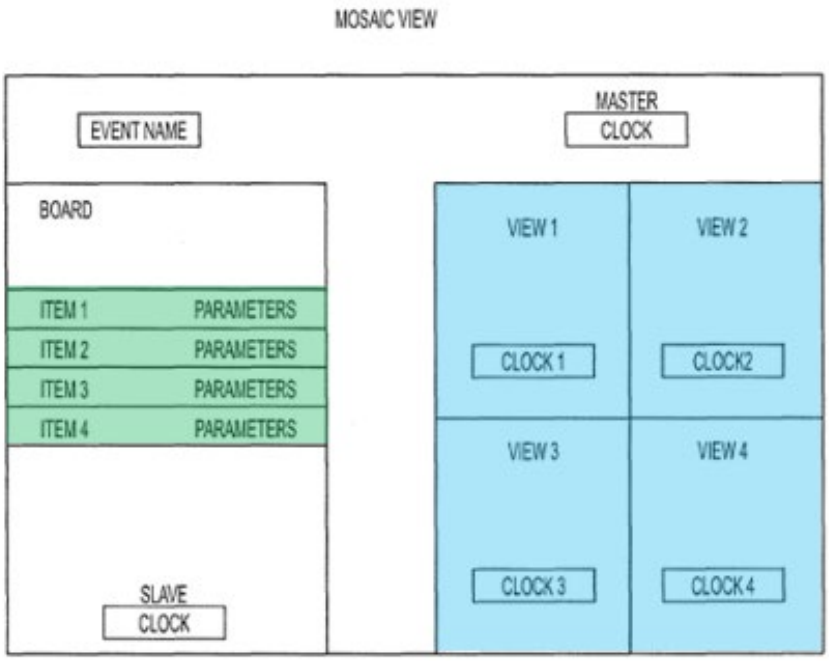

FIG. 7

Ex.1015, Fig. 7, ¶80 ("Referring now to Fig. 7, an example of a mosaic view on a video player is shown, which includes four views of four respective channels of live video of an event ... If desired, fewer than four views may be selected by the user, although more views/videos may be available.").

ii. **Limitation 27.1: "receive, on a third communication channel, the first digital content corresponding to the first video relating to the first sporting event or third digital content corresponding to the second video relating to the first sporting event;"**

260. In my opinion, Herzog discloses this limitation for the reasons stated above. *See* §X.A.3.a.ii, *supra*.

iii. **Limitation 27.2: "render, on the at least one second display of the second client device, the first video based on the first digital content or the second video based on the third digital content received on the third communication channel;"**

261. In my opinion, Herzog discloses this limitation for the reasons stated above. *See* §X.A.3.a.iii, *supra*.

iv. **Limitation 27.3: "receive, on a fourth communication channel different from the third communication channel, the second digital content corresponding to the online gaming information; and"**

262. In my opinion, Herzog discloses this limitation for the reasons stated above. *See* §X.A.3.a.iv, *supra*.

v. **Limitation 27.4: "render, on the at least one second display of the second client device, the online gaming information based on the second digital content received on the fourth communication channel."**

263. In my opinion, Herzog discloses this limitation for the reasons stated above. *See* §X.A.3.a.v *supra*.

d. Dependent Claim 28

i. **Limitation 28.0: "The method of claim 27, wherein**

in B), the second instructions transmitted to the second client device include the first address for the first media source or a second address for a second media source, such that the second client device uses the first address or the second address to request and receive the first digital content from the first media source or the third digital content from the second media source via the third video communication channel."

264. In my opinion, Herzog discloses this limitation for the reasons stated above. *See* §X.A.3.a, *supra*.

4. '218 Ground 2B: Claims 1-9, 12-14, 16-20, 23-24, and 29 Are Obvious Over Herzog in View of Spivey

265. For the reasons stated in Section IX.C, above, it is my opinion that a POSA would have been motivated to combine the teachings of Herzog and Spivey to arrive at the claimed invention with a reasonable expectation of success.

a. Independent Claim 1

i. Limitation 1.0: "A system for controlling a plurality of viewer client devices to receive first digital content relating to a first sporting event and first event information germane to the first sporting event, the first event information including online gaming information, the system comprising:"

266. Herzog provides "live video and audio data" to user devices over a "communication network." *See* Ex.1015, Abstract. Herzog's primary embodiment includes providing "multiple video/audio streams of race cars and drivers [*i.e.*, sources 48a-d], as they are imaged at different locations on the race track:"

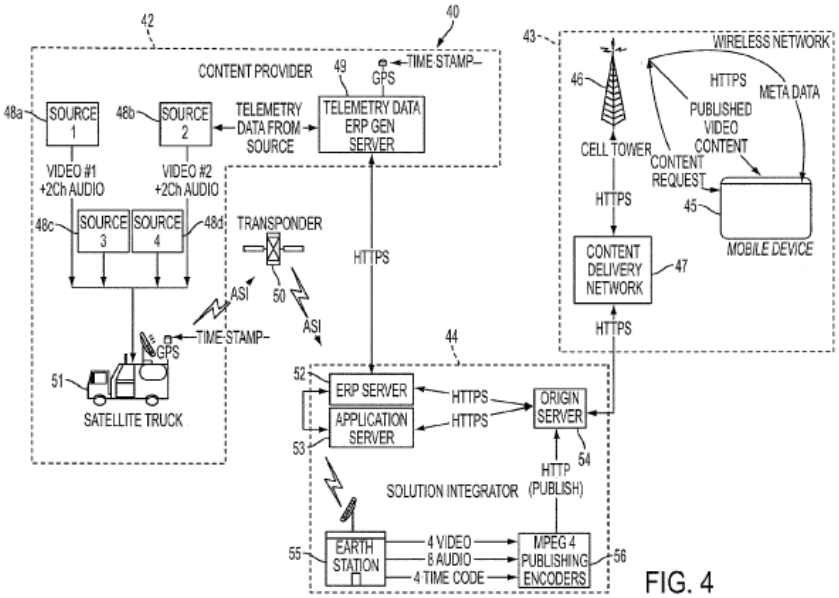

FIG. 4

Id. ¶45, Fig 4. This system makes these video feeds available to "mobile stations" and other "similar users." *Id.* ¶19. Each user can then request video from "one or more channels of video/audio for viewing a live event." *Id*. ¶70. The user then "receives both the video/audio stream in an HTTPS Live Streaming (HLS)-based media streaming communications protocol." *Id.* ¶51. Thus, Herzog provides a system where multiple different users can select the same, or different, live stream of digital content relating to a sporting event.

267. Herzog also provides event information germane to the sporting event. Specifically, Herzog transmits "meta-data" such as "the status of each car and driver in the race" and may include "lap number, car speed and acceleration" but there may be as many as "50 different parameters that are available." Ex.1015 ¶45. In my

opinion, a POSA would have understood such parameters to include online gaming information.

ii. Limitation 1.1: "A) a control server to periodically retrieve, via the Internet, the first event information germane to the first sporting event;"

268. Herzog's ERP Server connects to the "ERP Gen Server" over the internet:

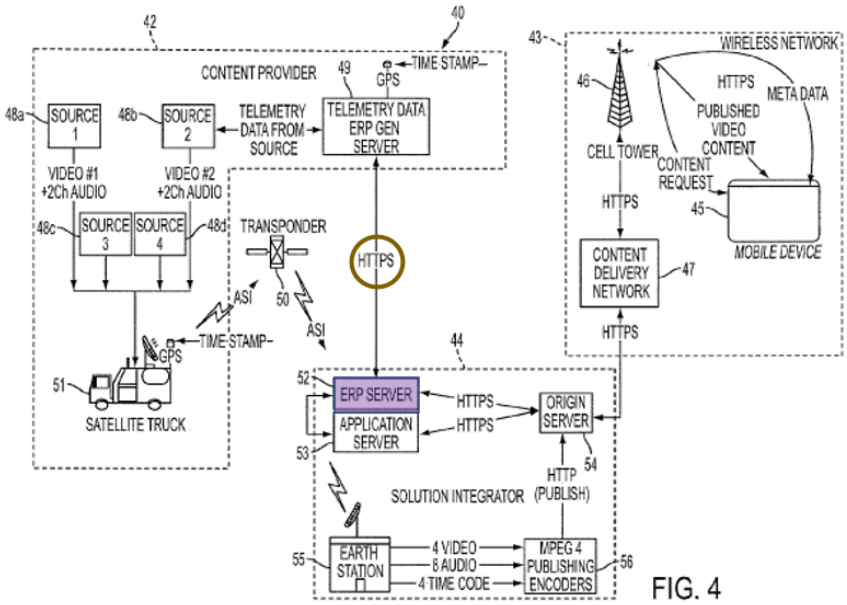

FIG. 4

Ex.1015 ¶¶45, 47, 50, Fig. 4. The ERP Server is a generic server that retrieves meta-data from the ERP Gen Server. *Id.* ¶¶16, 47, 50. It contains the same components as the '218's control server: a processor, memory device, and communication interfaces. *Id.* ¶13, 85-86, Fig. 8; Ex.1009, 56:5-16. The ERP Server "acts as an intermediary between the ERP generator server and the origin server." *Id.* ¶50. The meta-data retrieved includes event information germane to the sporting event.

Ex.1015 ¶45. The ERP Server retrieves this information over the internet because it retrieves the information in HTTPS format, an internet communication protocol. Ex.1015 ¶¶17, 50.

269. While a periodic time interval, *e.g.*, every .1 seconds, is not mentioned in Herzog, it is my opinion that a POSA would have understood that HTTP is a pull-oriented protocol where receivers such as the ERP server need to explicitly ask for new data. To reduce latency using an HTTP connection, a POSA would have known to have Herzog's ERP server periodically check for the content availability as often as possible. As noted in Popa, "HTTP is a pull oriented protocol" where the receiving servers "need to ask for new data." Ex.1047 at 4. In other words, Herzog would not be able to receive the data at all without periodically requesting or retrieving the updated data. *See id.* (noting that to reduce latency is for the receiving server to "periodically check for the content availability as often as possible"). Alternatively, it would have been an obvious design choice to use a periodic update to limit queries to the system and load on the components. Thus, in my opinion a POSA would have understood that Herzog and Spivey both disclose this limitation.

iii. **Limitation 1.2.1: "B) at least one socket server communicatively coupled to the control server to: receive from the control server at least the first event information; and"**

270. In my opinion, Herzog in view of Spivey discloses a socket server communicatively coupled to the control server (which, as discussed above, is

disclosed by Herzog's ERP Server). Herzog discloses providing event information, including online gaming information, over a separate connection to user equipment. Ex.1015 ¶¶48-52, 67, Figs. 4, 6. That process includes the ERP Server transmitting data to the Origin Server:

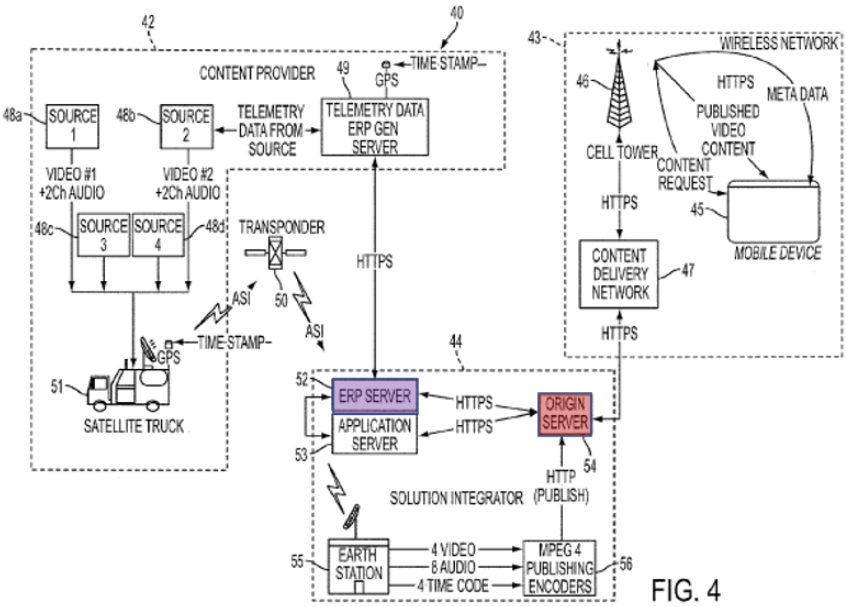

FIG. 4

Id. ¶¶50-51, 83, Fig. 4. As explained above, it is my opinion that a POSA would have incorporated Spivey's MQSD into Herzog's Origin Server, to reduce latency. §IX.C, *supra.*

271. Like the '218's socket server, Spivey's MQSD is a generic server that contains processors, memory, and communication components. Ex.1017 ¶¶35, 53, Figs. 3, 4. Moreover, Spivey's MQSD carries out the same purpose as the '218's socket server. The MQSD "receive[s]" and "process[es] live data to provide live data" to "the subscribed connected client devices substantially simultaneously." *Id.*

¶36; *see id.* ¶¶45 ("[MQS] device 310 may be a representative example of message queue server 120"), 54 (describing that MQSD is "substantially similar" to "MQS device 310"), 96. To accomplish this, the MQSD receives live event data from the LDSD, which just "receive[d] live data:"

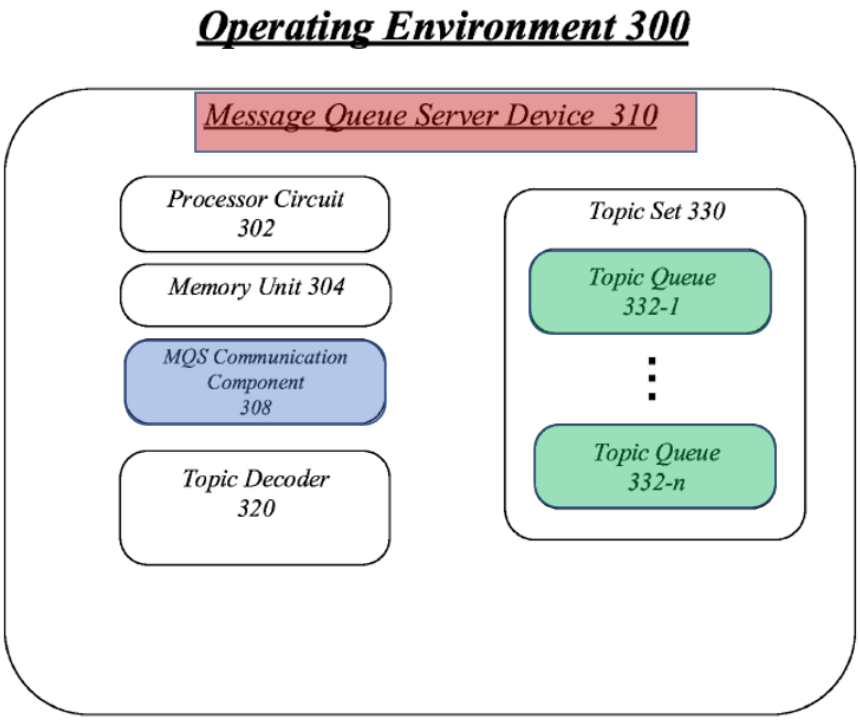

FIG. 3

Id. ¶55, Fig. 3. MQSD contains the MQS communication component which would allow the MQSD to communicate with the ERP Server, as contemplated in Spivey. *See id.* ¶¶46 (communication component 308 transmits and receives data), 54 (communication component 408 is analogous to 308), 55 ("LDS communication component 418 … allows [LDSD] to … transmit the data payloads to [MQSD]."); Ex.1015, Fig. 4.

272. After receiving the data, the MQSD organizes the received live data "into one or more of a plurality of topic queues" dedicated to storing information about "a specific game." Ex.1017 ¶¶47, 52. After sorting the data into the proper topic queues, the MQSD shares the information "substantially simultaneously" to "the subscribed connected client devices." *See id.* ¶96. Thus, it is my opinion that a POSA would have understood that Herzog's ERP server transmitting HTTPS information to Spivey's MQSD as disclosing the '218's socket server being communicatively coupled to a control server.

273. Further, Herzog's ERP Server "receives the meta-data from ERP generator server 49 in HTTPS communication format" and "acts as an intermediary between the ERP generator server and the origin server." Ex.1015 ¶50. Figure 4 shows that the meta-data is provided to the origin server from the ERP server in HTTPS format:

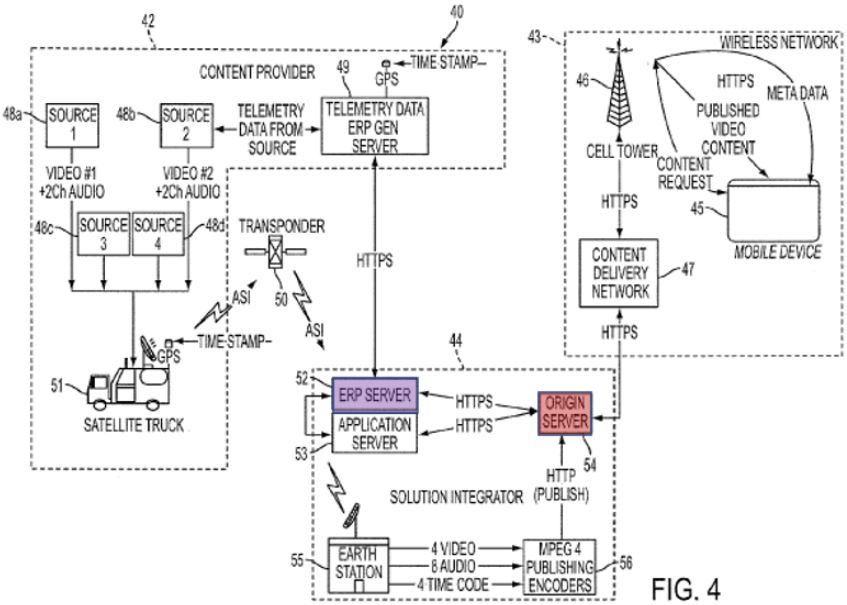

FIG. 4

Ex.1015 ¶¶50-51, Fig. 4. Incorporating Spivey's MQSD into Herzog's origin server would thus allow the MQSD (socket server) to receive from the ERP Server (control server) the meta-data provided (first event information). Thus, it is my opinion that a POSA would have understood that Herzog in view of Spivey discloses a socket server receiving from the control server at least the first event information.

iv. **Limitations 1.2.2-1.2.3: "transmit at least some of the first event information, including the online gaming information, to at least a first viewer client device of the plurality of viewer client devices via a first event information Internet communication channel between a first event socket of the at least one socket server and the first viewer client device,**

wherein the first event socket corresponds to the first event information germane to the first sporting event; and"

(A) First event socket corresponding to the first event information germane to the first sporting event

274. In my opinion, a POSA would have understood that Spivey's topic queues disclose the '218's first event sockets corresponding to the first event information germane to the first sporting event. *See* §X.A.1.a.ii.

(B) Transmitting the first event information to at least the first VCD of the plurality of VCDs

275. In my opinion, both Herzog and Spivey disclose transmitting the first event information to the first VCD of the plurality of VCDs. For example, in Spivey, the MQSD "may push data from topic queues … to the subscribers of the topics corresponding to those topic queues." Ex.1017 ¶46. In Herzog, the Origin Server may be configured to transmit "the meta-data to the content delivery network 47," which the user receives "in an HTTPS communications protocol." Ex.1015 ¶51. In my opinion, a POSA would have known that the websocket client-server communication protocol employed by Spivey was an alternative to the HTTP polling used by Herzog. *See* Ex.1046 at 46-47; §IX.C.1.

(C) Transmitting via a first event information Internet communication channel between a first event socket of the at least one socket server and the first VCD

276. In my opinion, Herzog in view of Spivey discloses providing first event information over a separate internet communication channel. Spivey's entire system is based on providing "live event data in real time." Ex.1017, Abstract. The MQSD

can be an "internet server." *See id.* ¶35. Spivey communicates with client devices over "any … combination of wired and/or wireless networks including … the Internet." *Id.* ¶179. For example, client devices "may request and participate in a websocket connection," which "typically comprises a two-way connection between two entities." *Id.* ¶¶43, 61. Moreover, consistent with Spivey, Herzog discloses providing event information over a separate communication path than the video signal where there is "a unique video and meta-data source that do not follow the same path of transmission:"

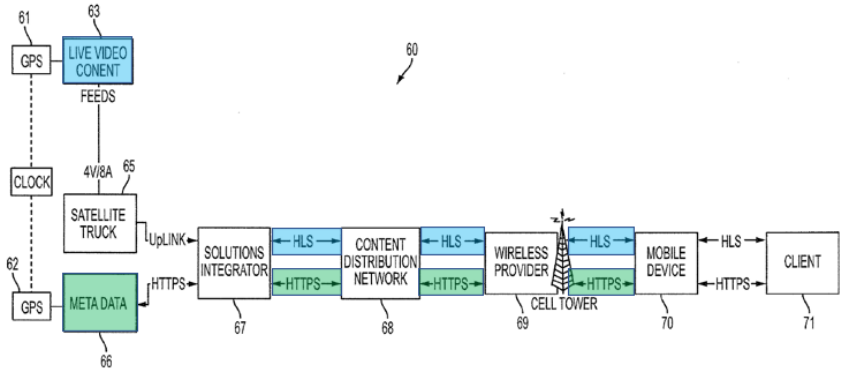

FIG. 5

Ex.1015 ¶47-51, 83, Figs. 1, 4, 6. Thus, it is my opinion that a POSA would have understood Spivey to disclose transmitting first event information via a separate internet connection.

277. Further, this information is provided via a connection between a topic queue and the first user equipment device. Users can access the MQSD using a URL. *See* Ex.1017 ¶¶81-82. Then, the user can access the specific topic queue they wish to receive information from by using a text string, *e.g.*, a topic label or Event

ID, associated with a topic queue. *Id.* ¶179, Fig. 9 ("Gamecenter.nfl.ravenssteelers."). Thus, it is my opinion that a POSA would have understood that Herzog in view of Spivey discloses distributing event information from a socket to a user device over an internet connection. Further, I believe a POSA would have understood that the internet connection is established using a URL and text string identifying a uniquely addressable communication endpoint on the MQSD, where first event information is transmitted to a VCD.

v. **Limitation 1.3.1: "C) at least one webserver communicatively coupled to the at least one socket server to transmit, to the first viewer client device: a first Internet address of a first media source to establish a first video Internet communication channel between the first media source and the first viewer client device to carry the first digital content relating to the first sporting event; and"**

278. Herzog discloses an "application server 53" (*i.e.*, webserver), which is "configured to receive the request from the client application software and begin sending the meta-data with the corresponding .JSON time stamp via the ERP server 52 in the solution integrator 44." Ex.1015 ¶58. Herzog's application server is depicted below in Figure 4:

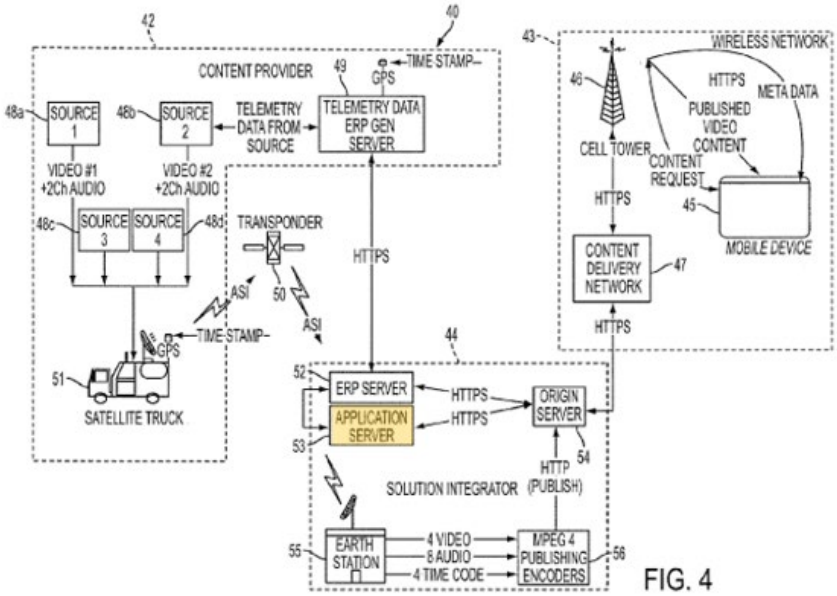

FIG. 4

Ex.1015, Fig. 4. The application server facilitates streaming between the origin server and client device by receiving a "request with the time code call out" from the client device, then prompting the origin server to transmit a meta-data stream to the client devices. *Id.* ¶51. While doing so, the application server "satisfies time synchronization requirements between a client application residing in mobile device 45 and the solution integrator 44." *Id.*

279. The application server accomplishes this using a media source Internet address establishing a communication channel between a media source and client device. Specifically, Herzog discloses a server address when describing the type of content a client device may store. Ex.1015 ¶35 ("The memories 114, 116 also store various data, such as telephone numbers and server addresses ... ."). To the extent Herzog does not explicitly reference a media source address, a POSA would have understood that the system in Herzog necessarily requires such an address to stream

digital content corresponding to the online gaming information from the media source to the client device. Specifically, a POSA would have understood that Herzog's HTTPS communication format uses the Transmission Control Protocol (TCP), which in turn uses the Internet Protocol (IP). These protocols require an IP address (*i.e.*, Internet address such as 130.24.20) to designate the location from which client devices can receive requested digital content.

vi. **Limitation 1.3.2: "a first socket address of the first event socket to establish the first event information Internet communication channel to carry the online gaming information."**

280. In my opinion, Herzog in view of Spivey discloses a socket address of an event socket. *See* §IX.C.1. Specifically, it is my opinion that a POSA would have understood that Spivey's event socket contains a socket address. Spivey's WebSocket operates over HTTP through a single socket and thus requires an IP address to designate the location from which client devices can receive the online gaming information. Users can access the MQSD using a URL. *See* Ex.1017 ¶¶81-82. Then, the user can access the specific topic queue they wish to receive information from by using a text string, *e.g.*, a topic label or EventID, associated with a topic queue. *Id.* ¶179, Fig. 9 ("Gamecenter.nfl.ravenssteelers."). Thus, it is my opinion that a POSA would have understood that Herzog in view of Spivey discloses distributing event information from an event socket to a user device over an internet connection. Further, I believe that a POSA would have understood that

the internet connection is established using a URL and text string identifying a uniquely addressable communication endpoint on the MQSD, *i.e.,* the socket address, where first event information is transmitted to a VCD.

b. Dependent Claim 2

i. **Limitations 2.0-2.1: "The system of claim 1, wherein**

the first socket address transmitted by the at least one webserver to the first viewer client device includes a first event identifier (first EventID) that corresponds to the first event socket, such that the first viewer client device uses a first URL including the first event identifier (first EventID) in the first URL to connect to the first event socket."

281. In my opinion, Herzog in view of Spivey discloses this limitation. As explained above, Herzog in view of Spivey discloses transmitting a socket address from a webserver to a client device. *See* §IX.C.1, *supra*. Further, Spivey discloses using a URL to establish an internet connection, in which the URL contains an EventID and socket address. *See* §§VIII.C, IX.C.1.

c. Dependent Claim 3

i. **Limitations 3.0-3.1: "The system of claim 1, wherein**

the first event information Internet communication channel to carry the online gaming information between the first event socket of the at least one socket server and the first viewer client device is established as a persistent connection."

282. In my opinion, Herzog in view of Spivey discloses a first event information Internet communication channel to carry online gaming information between the event socket and client device for the reasons stated above. *See* §IX.C.1, *supra*. This channel is established by using the websocket protocol, which uses a persistent connection. *See* §§IV.C.2, X.A.1.a.ii.

d. Dependent Claim 4

i. **Limitations 4.0-4.1: "The system of claim 1, wherein**

in C), the at least one webserver transmits, to a second viewer client device of the plurality of viewer client devices, the first socket address of the first event socket to establish a second event information Internet communication channel between the first event socket and the second viewer client device; and"

283. In my opinion, Herzog in view of Spivey discloses a webserver facilitating communication between a client device and socket server by transmitting a socket address to a client device of a plurality of devices. *See* §IX.C.1, *supra*. Herzog in view of Spivey further discloses that this socket address establishes an event information Internet communication channel between the event socket and client device. *Id*.

ii. **Limitation 4.2: "in B), the at least one socket server transmits at least some of the first event information, including the online gaming information germane to the first sporting event, to the second viewer client device via the second event information Internet communication**

channel, such that the online gaming information is shared in a synchronized manner by the first viewer client device and the second viewer client device."

284. In my opinion, Herzog in view of Spivey discloses a socket server transmitting online gaming information germane to a sporting event to a client device via an event information Internet communication channel. *See* §IX.C.1., *supra*. Herzog further discloses sharing online gaming information in a "synchronous manner" using a "VITC time stamp" as the "master time for synchronization." Ex.1015 ¶¶16, 58. Because the meta-data is synchronized to the videos, and the videos are delivered to the client devices at the same time, the meta-data is necessarily shared in a synchronized manner by the two client devices.

e. Dependent Claim 5

i. **Limitation 5.0: "The system of claim 4, wherein**

the first socket address transmitted by the at least one webserver to the second viewer client device includes the first event identifier (first EventID) that corresponds to the first event socket, such that the second viewer client device uses a second URL including the first event identifier (first EventID) in the second URL to connect to the first event socket."

285. In my opinion, Herzog in view of Spivey discloses this limitation for the reasons stated above. *See* §X.A.4.a, *supra*.

f. Dependent Claim 6

i. **Limitations 6.0-6.1: "The system of claim 4, wherein in**

A), the control server is a single point of entry for the system to obtain the first event information including the online gaming information to reduce synchronization errors between the first viewer client device and the second viewer client device."

286. In my opinion, Herzog discloses an ERP server (*i.e.*, control server) that transmits event information, including online gaming information, to a client device for the reasons stated above. *See* §IX.C.1, *supra*. As shown below in Figure 4, the ERP Server 52 acts as the single point of entry for transmitting online gaming information from the content provider to the client device:

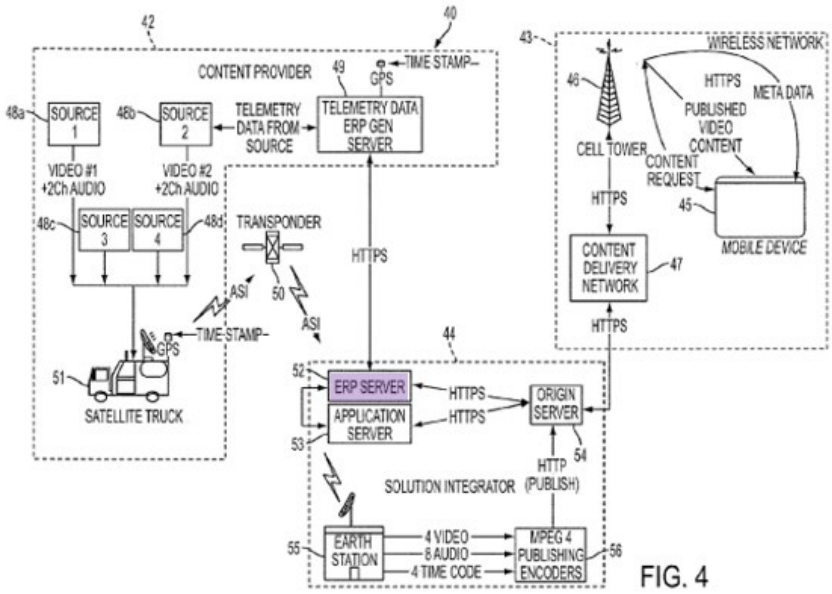

FIG. 4

Ex.1015, Fig. 4. Herzog further discloses that, to improve synchronization, the "solution integrator 44, is configured to receive the request from the client application software and begin sending the meta-data with the corresponding .JSON

time stamp via the ERP server 52 in the solution integrator 44." *Id.* ¶58; *see also* §X.A.4.d.ii.

g. Dependent Claim 7

i. **Limitations 7.0-7.1: "The system of claim 6, wherein**

: in A), the control server detects a change in status in the first event information and transmits changes in the online gaming information to the at least one socket server; and"

287. In my opinion, Herzog discloses an ERP server (*i.e.*, control server) designed to mitigate client-by-client and/or synchronization issues for the reasons stated above. *See* §VIII.A, *supra*. Herzog further discloses detecting a change in the status of event information by continuously monitoring and transmitting changes in telemetry data, including "lap number, car speed and acceleration, tire pressure, etc. In a car race, there may be as many as 50 different parameters that are available for monitoring of each race car, in order to assess how well the driver is performing during any interval of the race." Ex.1015 ¶45. The disclosed continuous monitoring is explicitly intended to detect a change of state (such as a tire puncture). It is clearly intended to detect a change of state. To the extent Herzog does not specifically disclose that its ERP server detects a change in status, in my opinion, it would have been obvious to a POSA that the ERP server does detect a change in status, for the same reasons explained above. *See* §X.A.2.g.i.

ii. **Limitation 7.2: "in B), the at least one socket server transmits the changes in the online gaming information to the first viewer client device and the second viewer client device via the first event socket to provide a single synchronized update and mitigate client-by-client latency and/or synchronization issues."**

288. In my opinion, Herzog discloses a socket server transmitting online gaming information to a plurality of client devices via an event socket for the reasons stated above. *See* §VIII.A, *supra*. Herzog further discloses a solutions integrator, including a socket server, to provide a single synchronized update and mitigate client-by-client latency for the reasons stated above. *See* §VIII.A, *supra*; Ex.1043 at 2 ("This technology allows to develop real time synchronization between multiple users over the Internet …."), ("The master sends [] information to the WebSocket server which broadcasts the same message to all the connected users.").

h. Dependent Claim 8

i. **Limitation 8.0: "The system of claim 4, wherein**

in C), the at least one webserver transmits to the second viewer client device one of: the first address of the first media source to establish a second video Internet communication channel between the first media source and the second viewer client device to receive the first digital content relating to the first sporting event; or a second address of a second media source to establish an alternate second video Internet communication channel between the second media source and the second viewer client device to receive second digital content relating to the first sporting event."

289. In my opinion, Herzog discloses a webserver transmitting a media source address to a client device to establish a video Internet communication channel for the reasons stated above. *See* §VIII.A, *supra*. Herzog further discloses transmitting the video and meta-data streams to multiple client devices. *See* §X.A.4.a.

i. Dependent Claim 9

i. **Limitations 9.0-9.1: "The system of claim 8, wherein**

: the second client device is a subscriber to one of: the first media source and/or the first digital content relating to the first sporting event; or the second media source and/or the second digital content relating to the first sporting event; and"

290. In my opinion, Herzog in view of Spivey discloses a client device, media source, and digital content relating to the first sporting event for the reasons stated above. *See* §IX.C.1, *supra*. Spivey teaches that a client device can be a subscriber to the media source of digital content. For example, Spivey describes topic label text strings to connect and subscribe to MQSD's topic queues. Ex.1017 ¶¶49, 51, 131; §§X.A.1.a, X.A.2.a.

ii. **Limitation 9.2: "in C), the at least one webserver transmits to the second viewer client device one of: a first identifier (first StreamID) for the first media source and/or the first digital content as at least a portion of the first address if the second client device is a subscriber to the first media source and/or the first digital**

content; or a second identifier (second StreamID) for the second media source and/or the second digital content as at least a portion of the second address if the second client device is a subscriber to the second media source and/or the second digital content."

291. As explained above, Herzog discloses an application server (*i.e.*, webserver) operative to stream digital sports-related digital content to a plurality of client devices. *See* §X.A.2.i.ii, *supra*. To communicate with the webserver, Spivey teaches that a VCD may use a URL containing a topic label text string to connect and subscribe to MQSD's topic queues. Ex.1017 ¶¶81-82; Fig. 9; §§X.A.1.a, X.A.2.a. This URL, or media source StreamID, contains a portion indicating the type of digital content the client device can expect to receive and display if it subscribes to the media source (*e.g.*, "gamecenter.nfl.ravenssteelers" to indicate an NFL game, "gamecenter.nfl.ravenssteelers.stats," referring to statistics about a specific NFL game). *Id.* ¶¶52, 66.

j. Independent Claim 12

i. **Limitation 12.0: "A method for providing, to a first client device, first event information germane to a first sporting event, wherein the first event information includes first online gaming information relating to the first sporting event, the method comprising:"**

292. In my opinion, Herzog in view of Spivey discloses this limitation, for the reasons stated above. *See* §X.A.4.a.i, *supra*.

ii. **Limitation 12.1: "A) transmitting the first online gaming information to at least the first client device via a first event information communication channel between a first event socket of at least one socket server and the first client device, wherein the first event socket corresponds to the first event information germane to the first sporting event; and"**

293. In my opinion, Herzog in view of Spivey discloses this limitation, for the reasons stated above. *See* §X.A.4.a.ii, *supra*.

iii. **Limitation 12.2: "B) transmitting at least one instruction to the first client device to cause the first client device to request a first copy of a first stream of digital content relating to the first sporting event and receive the first copy via a first video communication channel between at least one media source and the first client device,"**

294. Herzog discloses transmitting at least one instruction to the first client device to cause the first client device to request a first copy of a first stream of digital content relating to the first sporting event. *See* Ex.1015 ¶¶28, 84, 86, 88, cl. 11 (user device executes instructions). Furthermore, a POSA would have understood that Herzog necessarily transmits instructions to the client device during a digital handshake procedure between its user equipment and media sources at the outset of a connection.

295. In my opinion, Herzog also discloses causing a display to render video event and live event information relating to the sporting event, as shown below in Figures 4 and 7:

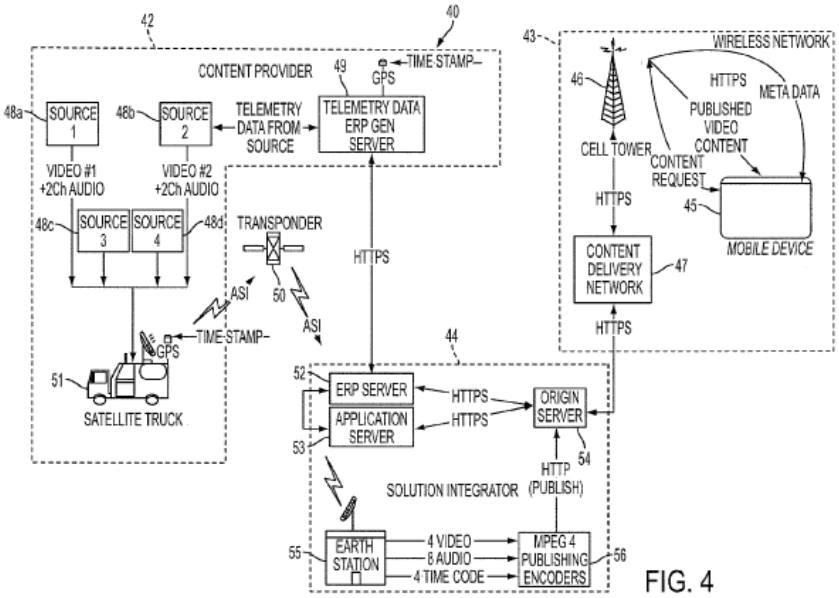

FIG. 4

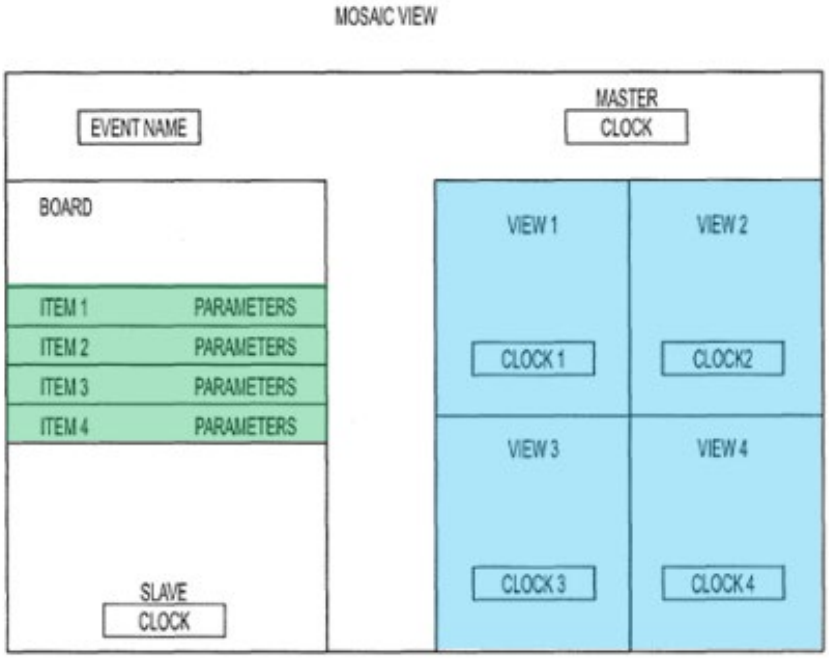

FIG. 7

Ex.1015 ¶12, Figs. 4, 7. Herzog accomplishes this by streaming "multiple paths of … content" (*i.e.*, sources 48a-d), then "display[s] the different streaming content in a synchronous manner." *Id.* ¶16. Herzog discloses that these sources relate to a sporting event, as they originate from a "sports venue." *Id.*

296. Furthermore, as shown below in Figure 6, Herzog discloses a client device receiving digital video content relating to a sporting event on a first communication channel after making a "user video request":

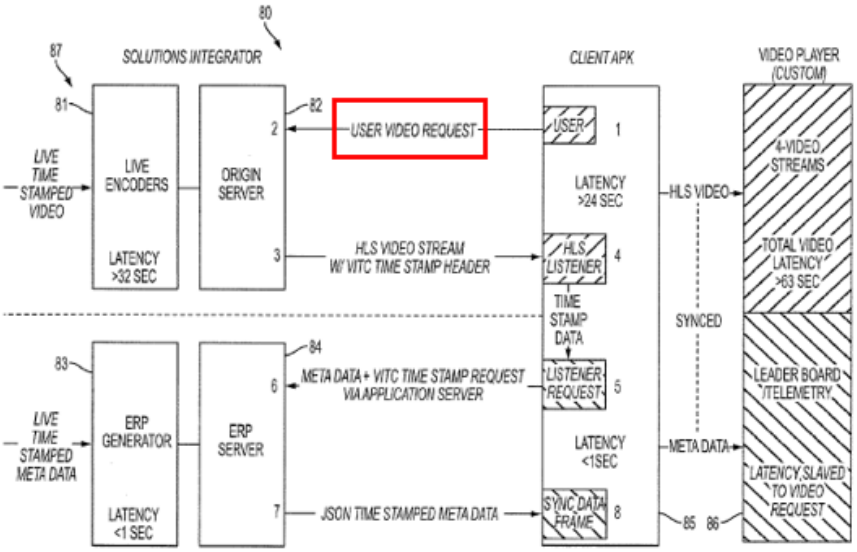

FIG. 6

Ex.1015, Fig. 6. Herzog makes clear that a client device receives such video content via a communication channel, as it discloses that "it may be desirable for a user to view video that is streamed live from the Internet to a client player using HTTP Live Streaming (also known as HLS) communications protocol." *Id.* ¶3.

iv. **Limitation 12.3: "wherein the first video communication channel is different than the**

first event information communication channel."

297. In my opinion, Herzog discloses this limitation for the reasons stated above. *See* §X.A.4.a.iv, *supra*.

k. Dependent Claim 13

i. **Limitations 13.0-13.3: "The method of claim 12, wherein**

prior to A), the method comprises: transmitting to the first client device a first event identifier (first Event ID) that corresponds to the first event socket;

receiving from the first client device a first URL including the first event identifier (first EventID) in the first URL; and

communicatively coupling the first client device to the first event socket to establish the first event information communication channel."

298. In my opinion, Herzog in view of Spivey discloses this limitation for the reasons stated above. *See* §§X.A.4.j, X.A.4.b, *supra*.

l. Dependent Claim 14

i. **Limitation 14.0: "The method of claim 12, wherein**

in B), the at least one first instruction transmitted to the first client device includes a first address for the at least one media source, such that the first client device uses the first address to request and receive from the at least one media source the first copy of the first stream of digital content relating to the first sporting event via the first video

communication channel, and displays the video relating to the first sporting event based on the received first copy of the first stream of digital content."

299. In my opinion, Herzog in view of Spivey discloses transmitting an instruction to the client device, causing it to request a live stream of digital content via a video communication channel between the media source and the client device and to display the video. *See* §IX.C.1, *supra*. Herzog further teaches that these instructions include a media source address. *See* §VIII.A, *supra*.

m. Independent Claim 16

i. **Limitation 16.0: "A method for controlling a first viewer client device to display a video relating to a first sporting event together with first online gaming information germane to the first sporting event, the method comprising:"**

300. In my opinion, Herzog discloses this limitation for the reasons stated above. *See* §§X.A.3.a, X.A.4.j, *supra*.

ii. **Limitation 16.1: "A) transmitting at least one first instruction to the first viewer client device to cause the first viewer client device to receive a first copy of a first stream of digital content relating to the first sporting event via a first video communication channel; and"**

301. In my opinion, Herzog discloses this limitation for the reasons stated above. *See* §§X.A.3.a, X.A.3.a.ii, X.A.4.j, *supra*.

iii. **Limitation 16.2: "B) transmitting at least one second instruction to the first viewer client device to cause the first viewer client device to**

receive the first online gaming information via a first event information communication channel between a first event socket of at least one socket server and the first viewer client device,"

(A) Transmitting at least one second instruction to the first VCD to receive the first online gaming information via a first event information communication channel between a first event socket of at least one socket server and the first VCD

302. In my opinion, both Herzog and Spivey disclose transmitting the first online gaming information to the VCD. For example, in Spivey, the MQSD "may push data from topic queues … to the subscribers of the topics corresponding to those topic queues." Ex.1017 ¶46. In Herzog, the Origin Server may be configured to transmit "the meta-data to the content delivery network 47," which the user receives "in an HTTPS communications protocol." Ex.1015 ¶51. In my opinion, a POSA would have known that the websocket client-server communication protocol employed by Spivey was an alternative to the HTTP polling used by Herzog. *See* Ex.1046 at 46-47; §IX.C.1.

303. In my opinion, Herzog in view of Spivey discloses providing online gaming information over a separate internet communication channel. Spivey's entire system is based on providing "live event data in real time." Ex.1017, Abstract. The MQSD can be an "internet server." *See id.* ¶35. Spivey communicates with client devices over "any … combination of wired and/or wireless networks including

… the Internet." *Id.* ¶179. For example, client devices "may request and participate in a websocket connection," which "typically comprises a two-way connection between two entities." *Id.* ¶¶43, 61. Moreover, consistent with Spivey, Herzog discloses providing event information over a separate communication path than the video signal where there is "a unique video and meta-data source that do not follow the same path of transmission:"

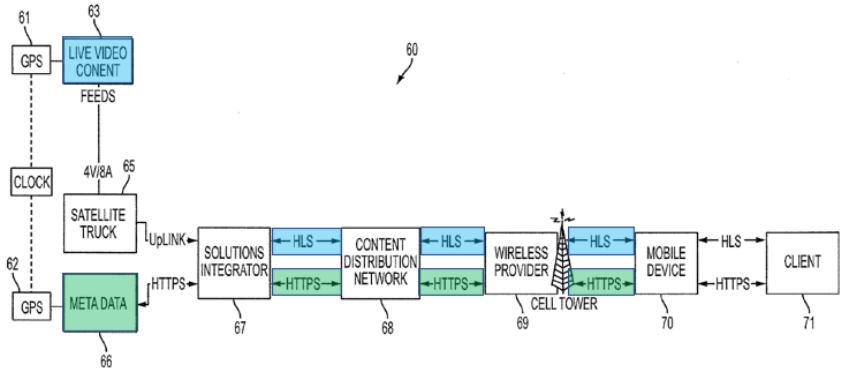

FIG. 5

Ex.1015 ¶47-51, 83, Figs. 1, 4, 6. Thus, it is my opinion that a POSA would have understood Spivey to disclose transmitting online gaming information via a separate internet connection.

304. Further, this information is provided via a connection between a topic queue and the VCD. Users can access the MQSD using a URL. *See* Ex.1017 ¶¶81-82. Then, the user can access the specific topic queue they wish to receive information from by using a text string, *e.g.*, a topic label or Event ID, associated with a topic queue. *Id.* ¶179, Fig. 9 ("Gamecenter.nfl.ravenssteelers."). Thus, it is my opinion that a POSA would have understood that Herzog in view of Spivey

discloses distributing online gaming information from a socket to a user device over an internet connection. Further, I believe a POSA would have understood that the internet connection is established using a URL and text string identifying a uniquely addressable communication endpoint on the MQSD, where first event information is transmitted to a VCD.

305. As established above, Herzog in view of Spivey discloses transmitting instructions to a VCD to cause it to receive online gaming information. *See* §§IX.C.1, X.A.3.a, *supra; see also* §X.A.1.e.iii (inherent).

(B) First event socket of at least one socket server

306. In my opinion, Herzog in view of Spivey discloses a first event socket of a socket server. *See* §X.A.1.e.iii, *supra*.

iv. **Limitation 16.3: "wherein the first event information communication channel is different than the first video communication channel."**

307. In my opinion, Herzog discloses this limitation for the reasons stated above. *See* §X.A.3.a, *supra*.

n. Dependent Claim 17

i. **Limitations 17.0-17.1: "The method of claim 16, wherein**

prior to A), the method comprises: receiving from the first viewer client device a first user selection of the first sporting event from a listing of events;"

308. As stated above, Spivey's topic labels enable VCDs to connect and subscribe to sports-related topic queues by selecting a sporting event from a list. *See* §X.A.4.m.iii, *supra*; Ex.1005 ¶¶51-52, 83-84; Fig. 9.

ii. **Limitation 17.2: "transmitting to the first viewer client device, in response to the first user selection of the first sporting event, a directory of sources generating media associated with the first sporting event; and"**

309. As noted above, the VCD can use Spivey's topic labels to select "the topics available from [the MQSD] in a topic selection list[ing]" topic queues relating to various sporting events. *See* §X.A.4.m.iii, *supra*; Ex.1017 ¶¶51-52, 83-84; Fig. 9. Once the VCD selects a topic label, a "topic decoder ... use[s] the topic label to identify a topic queue [], and may place the data payload of the topic entry into the topic queue." *Id.* ¶49. For streaming to the VCD the data payload is then pushed from the topic queue to the VCD through the MQSD. *Id.* ¶¶65, 96, Fig. 6; §§X.A.1.e, X.A.4.m.

iii. **Limitation 17.3: "receiving from the first viewer client device a second user selection of a first source from the directory of sources generating media associated with the first sporting event,"**

310. As noted above, after selecting a particular topic label relating to a sporting event, the VCD can "display a selection user interface element to allow the

operator to select one or more topics to subscribe to." *See* §X.A.4.m.iii, *supra*; Ex.1017 ¶75; Fig. 10.

iv. **Limitation 17.4: "wherein in A), the at least one first instruction transmitted to the first viewer client device includes a first address for the first source."**

311. Spivey discloses transmitting "topic labels" (*i.e.*, source addresses) enabling the VCD to request initiation of a selected digital content stream. *See* §§X.A.4.m.ii, X.A.4.m.iii, *supra*; Ex.1017 ¶¶46, 104, 179. Furthermore, it is my opinion that a POSA would have understood that the system in Herzog in view of Spivey necessarily requires an address for the media source to stream digital content corresponding to the user's selected sporting event from the media source to the client device. §X.A.3.b.

o. Dependent Claim 18

i. **Limitations 18.0-18.1: "The method of claim 16, wherein**

in A), the at least one first instruction transmitted to the first viewer client device includes a first address for a first media source, such that the first viewer client device uses the first address to request and receive from the first media source the first copy of a first stream of digital content relating to the first sporting event via the first video communication channel, and displays the video relating to the first sporting event based on the received first copy of the first stream of digital content."

312. In my opinion, Herzog in view of Spivey discloses this limitation. Herzog discloses transmitting instructions to a client device, causing it to receive a digital content stream relating to a sporting event via a video communication channel. *See* §X.A.4.m.ii, X.A.3.b, *supra*. Herzog further discloses that such instructions include a media source address that the client device can use to initiate a digital content stream. *See* §X.A.4.n, *supra*. Herzog also discloses instructions causing the device to display the video related to the sporting event. *See* §VIII.A, *supra*.

p. Dependent Claim 19

i. **Limitation 19.0-19.1: "The method of claim 18, wherein**

in B), the at least one second instruction transmitted to the first viewer client device includes a first event identifier (first Event ID) that corresponds to the first event socket, such that the first viewer client device uses a first URL including the first event identifier (first EventID) in the first URL to connect to the first event socket."

313. *See* §X.A.4.a.i, *supra*. In my opinion, Herzog in view of Spivey discloses a socket address of an event socket. Herzog discloses a server address, albeit indirectly, when describing the type of content a client device may store. Ex.1015 ¶35 ("The memories 114, 116 also store various data, such as telephone numbers and server addresses ... ."). To the extent Herzog does not explicitly reference a socket address, I believe a POSA would have understood that the system

in Herzog necessarily requires such an address to stream digital content corresponding to the online gaming information. Specifically, it is my opinion that a POSA would have understood that Herzog's HTTPS communication format uses the Transmission Control Protocol (TCP), which in turn uses the Internet Protocol (IP). These protocols combine a TCP port number and IP address to form a socket address with which client devices can receive requested digital content.

314. Further, in implementing Spivey, it is my opinion that a POSA would have understood that Spivey's event socket contains a socket address. *See* Spivey's WebSocket operates over HTTP through a single socket and thus requires an IP address to designate the location from which client devices can receive the online gaming information. Users can access the MQSD using a URL. *See* Ex.1017 ¶¶81-82. Then, the user can access the specific topic queue they wish to receive information from by using a text string, *e.g.*, a topic label or EventID, associated with a topic queue. *Id.* ¶179, Fig. 9 ("Gamecenter.nfl.ravenssteelers."). Thus, I believe a POSA would have understood that Herzog in view of Spivey discloses distributing event information from an event socket to a user device over an internet connection. Further, in my opinion a POSA would have understood that the internet connection is established using a URL and text string identifying a uniquely addressable communication endpoint on the MQSD, *i.e.,* the socket address, where the online gaming information is transmitted to a VCD. Thus, Spivey discloses

using a URL to establish an internet connection, in which the URL contains an EventID and socket address.

q. Dependent Claim 20

i. **Limitations 20.0-20.1: "The method of claim 19, further comprising:**

C) receiving the first URL including the first event identifier in the first URL; and"

315. Spivey discloses a user interface "to allow the operator to select or enter the address or connection information to a particular" MQSD.[7] Ex.1017 ¶¶81-82. As shown below in Figure 9, the address "may resemble a uniform resource location (URL) ... .":

[7] *See* §X.A.1.e.ii.

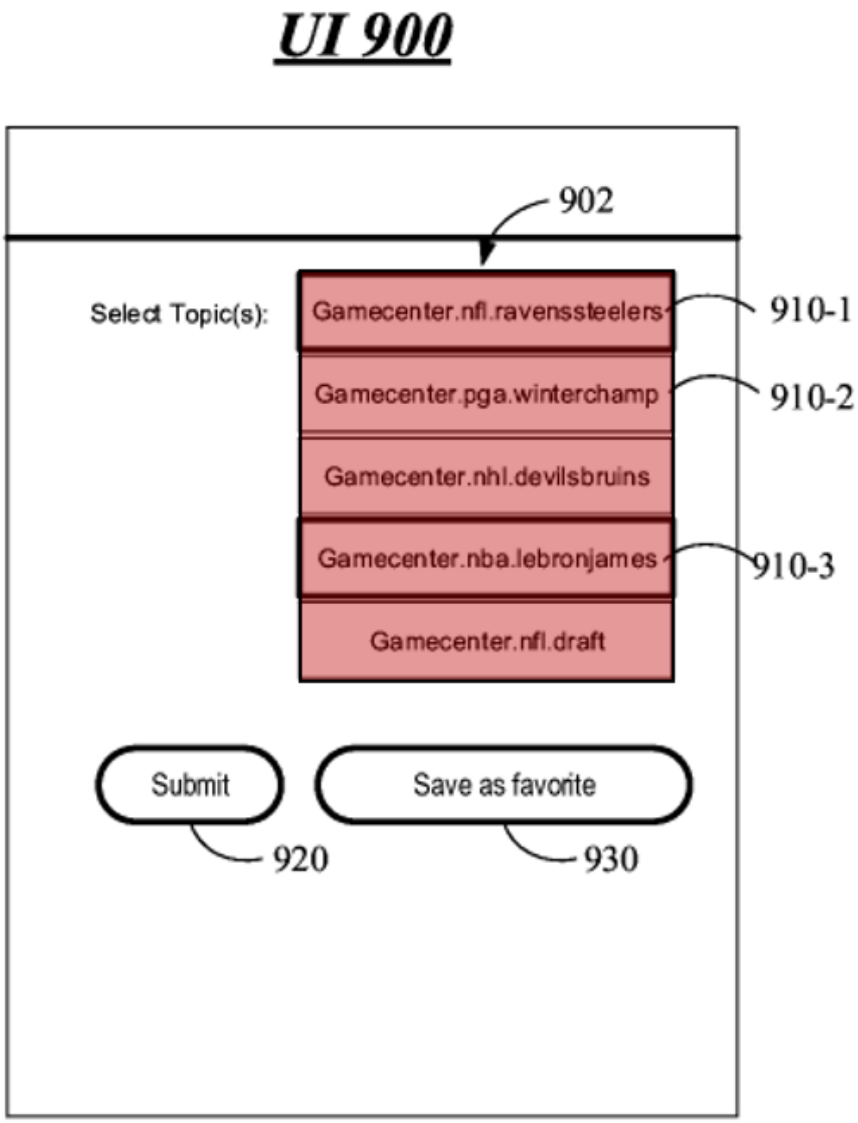

FIG. 9

Id. ¶82, Fig. 9. Each URL corresponds to a specific sporting event and contains an Event ID, such as "a National Football League (NFL) game" between the Baltimore Ravens and the Pittsburgh Steelers, "a Professional Golf Association" winter championship, or a "National Basketball Association topic about player Lebron James." *Id.* ¶85.

ii. **Limitation 20.2: "D) establishing the first event information communication channel between the first event socket and the first viewer client device as a persistent connection."**

316. In my opinion, Herzog in view of Spivey discloses this limitation. As explained above, the first event information communication channel between the first event socket and the first VCD is established by using the websocket protocol, which uses a persistent connection. *See* §§IX.C.1, X.A.1.e.

r. Dependent Claim 23

i. **Limitation 23.0: "The method of claim 22, wherein in A), the first instructions transmitted to the first client device include a first event identifier (first Event ID) that corresponds to a source of the second digital content corresponding to the online gaming information."**

317. In my opinion, Herzog in view of Spivey discloses this limitation for the reasons explained above. *See* §§X.A.4.p, X.A.4.q.

s. Dependent Claim 24

i. **Limitations 24.0-24.1: "The method of claim 23, further comprising:**

B) receiving from the first client device a first URL including the first event identifier; and C) establishing the second communication channel between the source of the second digital content and the first client device as a persistent connection based at least in part on B)."

318. In my opinion, Herzog in view of Spivey discloses this limitation for the reasons explained above. *See* §§X.A.4.p, X.A.4.q.

t. Dependent Claim 29

i. **Limitation 29.0: "The method of claim 28, wherein in A), the second instructions transmitted to the second client device include the first event identifier (first Event ID) that corresponds to the source of the second digital content corresponding to the online gaming information."**

319. In my opinion, Herzog in view of Spivey discloses this limitation for the reasons explained above. *See* §§X.A.4.p, X.A.4.q.

5. '218 Ground 2C: Claims 25-26 and 30 Are Obvious Over Herzog in View of Ellis

320. For the reasons stated in Section IX.D, above, it is my opinion that a POSA would have been motivated to combine the teachings of Herzog and Ellis to arrive at the claimed invention with a reasonable expectation of success.

a. Dependent Claim 25

i. **Limitation 25.0: "The method of claim 21, wherein in A), the first instructions transmitted to the first client device cause the at least one first display of the first client device to render the online gaming information relating to the first sporting event as interactive content."**

321. In my opinion, Herzog in view of Ellis discloses this limitation. Herzog discloses causing a client device to render online gaming information in its display.

See §IX.D.1, *supra*. Ellis discloses multiple interactive features relating to digital content, as explained above. *See* §IX.D.2, *supra*.

b. Dependent Claim 26

i. **Limitation 26.0: "The method of claim 25, wherein in A), the first instructions transmitted to the first client device cause the first client device, when a user of the first client device interacts with the interactive content, to: launch further graphics or animations; receive additional information about the first sporting event; and/or navigate to an Internet location."**

322. In my opinion, Herzog in view of Ellis discloses this limitation. *See* §IX.D.2, *supra.* Herzog discloses causing a client device to render digital content in its display. *See* §VIII.A, supra. Ellis similarly discloses transmitting instructions to the client device to cause it to render information on its display when the user selects the "TV Guide" option. Ex.1016 ¶103, Fig.7. Upon selecting the "TV Guide" option, an "interactive media guidance application main menu" appears, presenting the user with several options to further engage with sporting event information. *Id.* ¶103. Figure 7, below, illustrates the options available to the user:

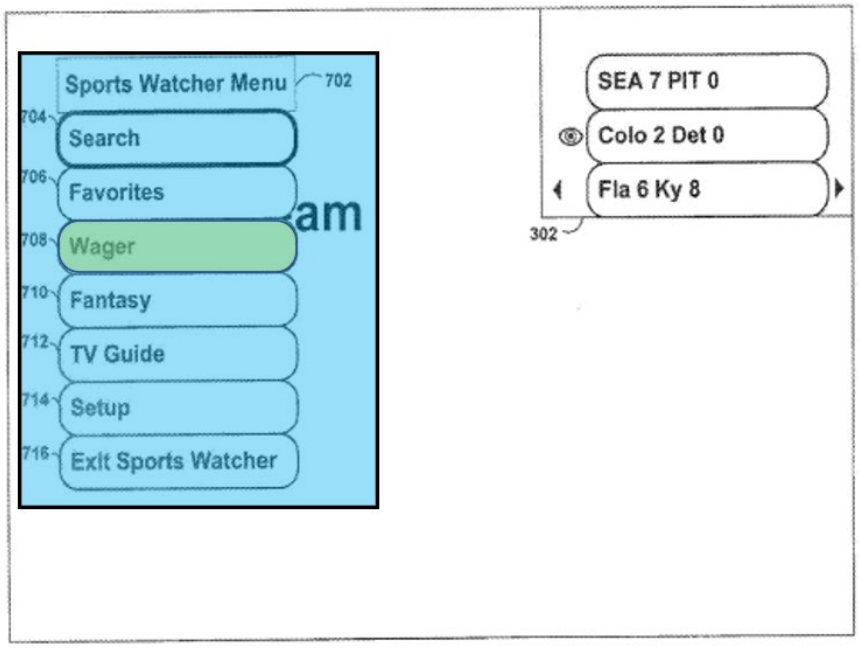

Id., Fig.7. For example, "display screen 1500 (FIG.15) may be displayed after a user selects wagering option 708." *Id.* ¶103. Figure 15, displaying wagering information related to a first sporting event, is shown below:

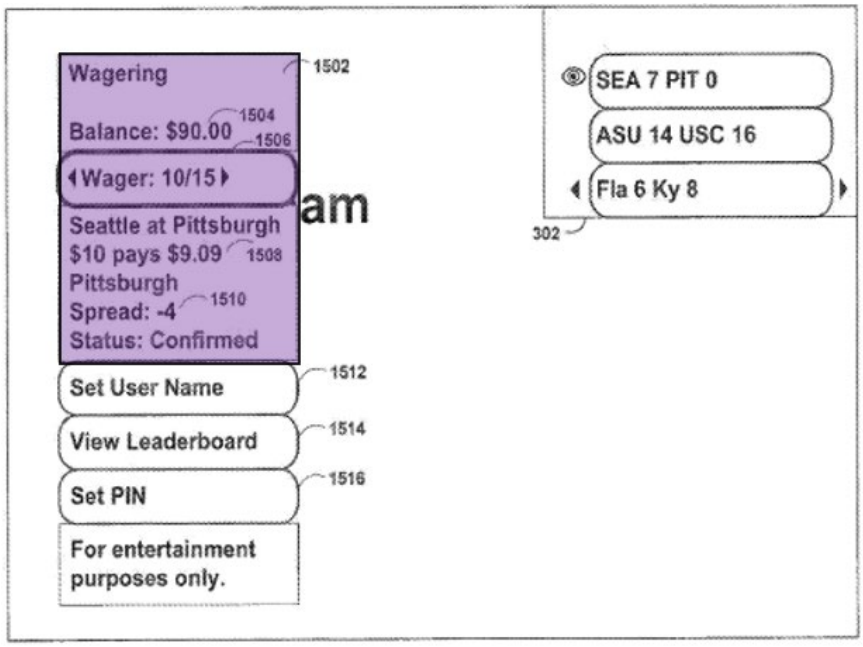

Id., Fig. 15.

323. Additionally, Ellis discloses displaying a screen that allows a user to "select any commentary option to be presented" relevant to a sporting event. *Id.* ¶132. Game commentary "may include text, graphics, video, and interactive elements (e.g., interactive playbooks, polls, and discussion forums)." *Id.* Figure 25, below, illustrates the game commentary menu:

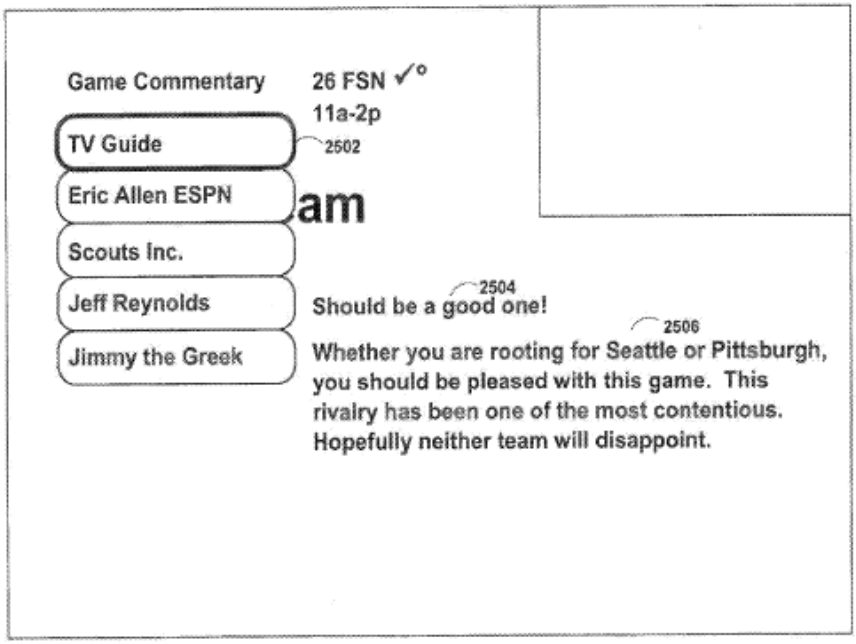

Id., Fig. 25. By selecting any option presented above, a user can access the associated spots-related commentary. *Id.* ¶132.

c. Dependent Claim 30

i. **Limitations 30.0-30.1: "The method of claim 27, further comprising:**

C) transferring first real-time information relating to the first digital content to and from the first client device via a first real-time information communication channel; and"

324. In my opinion, Herzog in view of Ellis discloses this limitation for the reasons stated above. §§IX.D.2, X.A.3.a, *supra*.

ii. **Limitation 30.2: "D) transferring second real-time information relating to the first digital content or the third digital content to and from the second client device via a second real-time information communication channel,"**

325. In my opinion, Herzog in view of Ellis discloses a plurality of real-time information communication channels for the reasons described above. *See* §§IX.D.2, X.A.3.a, *supra*.

iii. **Limitation 30.3: "wherein at least one of the first real-time information or the second real-time information comprises: at least one chat message; at least one statistic; trivia; at least one poll; news or current event information; at least one photo; advertising content; an indication of a viewer joining or leaving the first digital content or the third digital content; at least one digital gift; and/or at least one sponsorship."**

326. In my opinion, Herzog in view of Ellis discloses this limitation. *See* §§IX.D.2, X.A.3.a, *supra.*

6. '218 Ground 2D: Claims 10-11 and 15 Are Obvious Over Herzog in View of Spivey and Ellis

327. For the reasons stated in Section IX.E, above, it is my opinion that a POSA would have been motivated to combine the teachings of Herzog, Spivey, and Ellis to arrive at the claimed invention with a reasonable expectation of success.

a. Dependent Claim 10

i. **Limitations 10.0-10.1: "The system of claim 1, wherein:**

in B), the at least one socket server further transmits first real-time information relating to the first digital content to at least the first viewer client device of the first plurality of viewer client devices via a first real-time information Internet communication channel between a first real-time information socket of the at least one socket server and the first viewer client device, wherein the first real-time information socket corresponds to the first digital content relating to the first sporting event; and"

328. In my opinion, Herzog in view of Spivey and Ellis discloses this limitation. Herzog/Spivey discloses a socket server transmitting digital content to a plurality of client devices via an information Internet communication channel between a socket server and client device. *See* §IX.C.1, *supra*. Herzog/Spivey further discloses that the event information socket corresponds to the digital content relating to the sporting event. *Id*. Ellis discloses a SCS (*i.e.,* a control server) providing first event information germane to the first sporting event through a "plurality of real-time data feeds," one of which can include "sports score and game status information," while the other carries "sports commentary." Ex.1016 ¶41. Figure 1 illustrates Ellis's SCS:

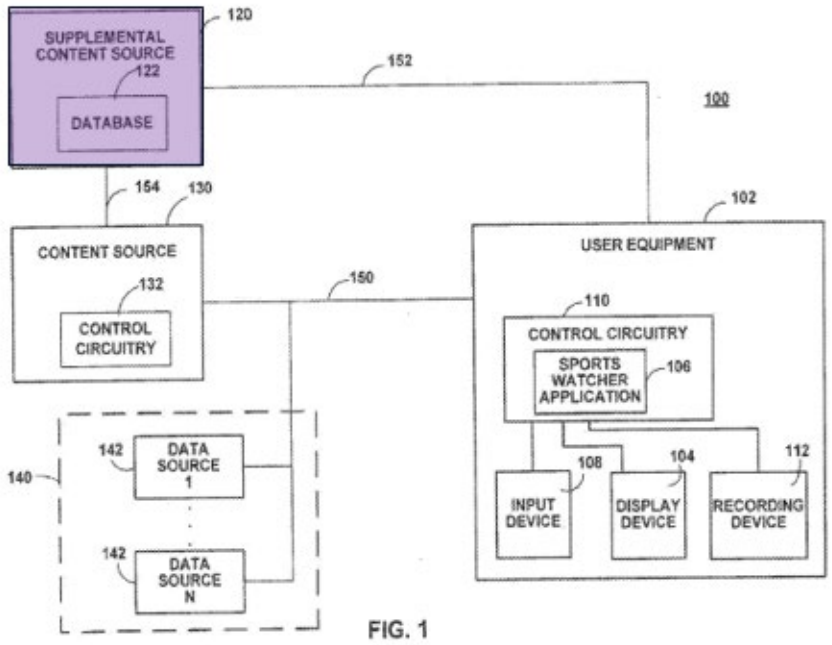

Id., Fig. 1. Ellis's SCS may be "any suitable content source configured to provide real-time ... spread and wagering data, and any other sports-related information to user equipment 102." *Id*. This real-time data feed may include chat information, as explained above. *See* §§153, IX.E.3.

ii. **Limitation 10.2: "in C), the at least one webserver transmits to the first viewer client device a second socket address of the first real-time information socket to establish the first real-time information Internet communication channel."**

329. In my opinion, Herzog discloses a webserver transmitting a socket address of an event information socket to a client device to establish an event information Internet communication channel. *See* §§VIII.A, X.A.2.a.v, *supra*. Ellis discloses that the event information channel can carry real-time data. *See* §153, *supra*.

b. Dependent Claim 11

i. **Limitation 11.0: "The system of claim 10, wherein the first real-time information relating to the first digital content comprises: at least one chat message; at least one statistic; trivia; at least one poll; news or current event information; at least one photo; advertising content; an indication of a viewer joining or leaving the first digital content; at least one digital gift; and/or at least one sponsorship."**

330. In my opinion, Ellis discloses real-time data feeds capable of transmitting real-time information to client devices. *See* §153, *supra*. Ellis further discloses that such real-time information can include chat information, Ex.1016 ¶132, or an advertisement, ¶43, Fig. 5. Further, Herzog discloses "current event information" relating to telemetry data (*i.e.*, the digital content). Ex.1015 ¶45.

c. Dependent Claim 15

Limitations 15.0-15.2: "The method of claim 12, further comprising:

C) transferring first real-time information relating to the first stream of digital content to and from the first client device via a first real-time information communication channel between a first real-time information socket of the at least one socket server and the first client device,

wherein the first real-time information comprises: at least one chat message; at least one statistic; trivia; at least one poll; news or current event information; at least one photo; advertising content; an indication of a viewer joining or leaving the first stream of digital

content; at least one digital gift; and/or at least one sponsorship."

331. In my opinion, Herzog in view of Spivey and Ellis discloses these limitations for the same reasons stated above. *See* §§X.A.6.a, X.A.6.b.i.

B. The '687

1. '687 Ground 1A: Claims 1, 8-9, 19-25, 27-30 Are Obvious Over Ellis in View of Spivey

332. For the reasons stated in Section IX.A, above, it is my opinion that a POSA would have been motivated to combine the teachings of Ellis and Spivey to arrive at the claimed invention with a reasonable expectation of success.

a. Independent Claim 1

i. Limitation 1.0: "A system for providing, to a first plurality of viewer client devices, a first plurality of copies of a first live stream of digital content relating to a first live sporting event, and for providing, to a second plurality of viewer client devices, a second plurality of copies of a second live stream of digital content relating to the first live sporting event or a second live sporting event, the system comprising:"

333. In my opinion, to the extent the preamble is limiting, Ellis discloses this limitation. *See* Ex.1016, Abstract. Ellis discloses a system for providing digital content relating to a live sporting event by providing "enhanced information access and viewing functionality for sports-related programming," which includes "a

sporting event, sports news, or sports commentary." *Id.* ¶¶8, 11. Figure 2B, below, shows sporting events available at the same time to any number of users.

220

Tuner (222)	Primary Source ID (224)
1	<sourceid_2>
2	<sourceid_1>
3	<sourceid_8>
4	<sourceid_4>

230

Source ID (232)	Type (234)	Profile Score (236)
<sourceid_1>	Game	90
<sourceid_2>	Game	95
<sourceid_3>	Commentary	45
<sourceid_4>	News	75
<sourceid_5>	Movie	25
<sourceid_6>	Movie	35
<sourceid_7>	Highlights	65
<sourceid_8>	Game	80

Id. ¶¶62-63, Fig. 2B. Ellis discloses a system that provides the "media content" from those sporting events "to user equipment 102." *Id.* ¶40. Media content includes broadcast programming "and any other content capable of being displayed by, presented to, … or interacted with, using user equipment 102." *Id.*

334. Ellis discloses providing copies of the live video stream to a plurality of user devices by providing a broadcast system where any "number of users" may receive signals from a content source. Ex.1016 ¶39. The signals are individual copies of the same live stream of digital content. *Id.* ¶¶40, 62, Fig. 2B. For example, Ellis's system broadcasts digital streams from the content source, which can be an "[i]nternet or network media/webserver." *Id.* ¶40. Users can select which content to receive, as shown in Figure 2. *Id.* ¶62. Ellis then sends an individual copy of the live event to the users over a communication path. *Id.* ¶45. The communication

path can be any "suitable wired or wireless path." *Id.* "For IPTV," content may be "delivered on a particular network address (e.g., multicast address) on which an IP socket is currently joined." *Id.* ¶74. A POSA would have understood this distribution system provides a plurality of copies of digital content to a plurality of viewers.

ii. **Limitation 1.1: "a plurality of media sources to:"**

335. In my opinion, Ellis discloses this limitation. The '687 explains that the media sources can be, for example, "computer servers including one or more processors, memory, and one or more communication interfaces" that "receive a live stream of video-based commentary from a given broadcaster client device, and provide copies of the live stream of video-based commentary to one or more [VCDs]." Ex.1003, 19:18-23.

336. Ellis discloses content sources, which are "any suitable source of media content" such as a "Internet or network media/web server, or any other suitable facility or system for originating or distributing passive or interactive content to user equipment." Ex.1016 ¶40. Ellis's content sources serve the purpose of receiving a broadcast of a live event and distributing video content to users via communications paths. *See id.* ¶¶39-41, 45, 47. Figure 1 shows a content source distributing video content to users over communication path 150:

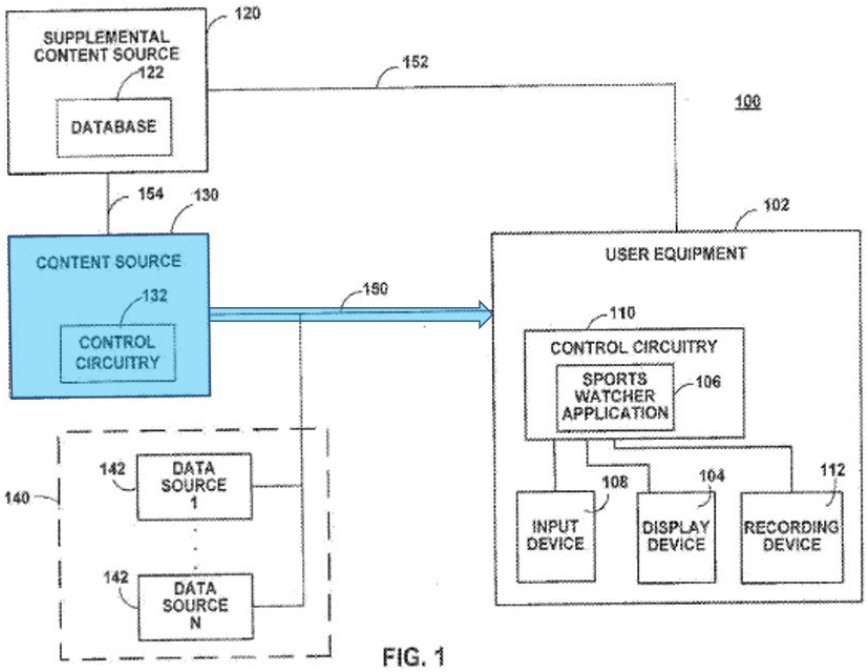

FIG. 1

Id. ¶¶39-41, Fig. 1. Ellis also discloses multiple content sources, *i.e.*, a plurality. *Id.* ¶39. ("[T]here may be numerous instances of content source 130 …, for clarity only one instance ... has been shown …."). Moreover, as explained below, Ellis's content sources perform the same functions as the media sources as recited in limitations 1.2-1.4.

iii. Limitation 1.2: "receive the first live stream of digital content and the second live stream of digital content;"

337. Ellis discloses this limitation. The '687 explains that the media sources receive the first and second stream of digital content from broadcasting clients, as shown in Figure 2. Ex.1016, Fig. 2. Ellis discloses that the content source "may be any suitable source of media content, such as, for example a cable system headend, satellite television distribution facility, television broadcast facility … Internet or

network media/web server, or any other suitable facility or system for … distributing … content to user equipment 102." *Id*. ¶40. The content sources "provide multiple streams of digital content, including "broadcast programing" and live sporting events. *Id.* ¶¶40, 45, 74. Ellis further discloses that a user may "actively watch one or more sporting events," and the user "may change or swap primary and/or secondary sporting events at any time." *Id.* ¶¶61-62. Thus, Ellis discloses content sources that receive multiple live streams of content and distribute that content to user equipment.

iv. **Limitations 1.3 and 1.4: "provide a first copy of the first plurality of copies to a first viewer client device of the first plurality of viewer client devices via a first video Internet communication channel between the plurality of media sources and the first viewer client device of the first plurality of viewer client devices;**
and provide a first copy of the second plurality of copies to a first viewer client device of the second plurality of viewer client devices via a second video Internet communication channel between the plurality of media sources and the first viewer client device of the second plurality of viewer client devices;"

338. In my opinion, Ellis discloses these limitations.

(A) First VCD of the first/second plurality of VCDs

339. The '687's Figure 1A gives an example of the "first viewer client device of the first plurality of viewer client devices." There, a first viewer client

device means one user, 200A, of the first group that receives individual copies 202A, 202B of the first live stream of digital content 102A:

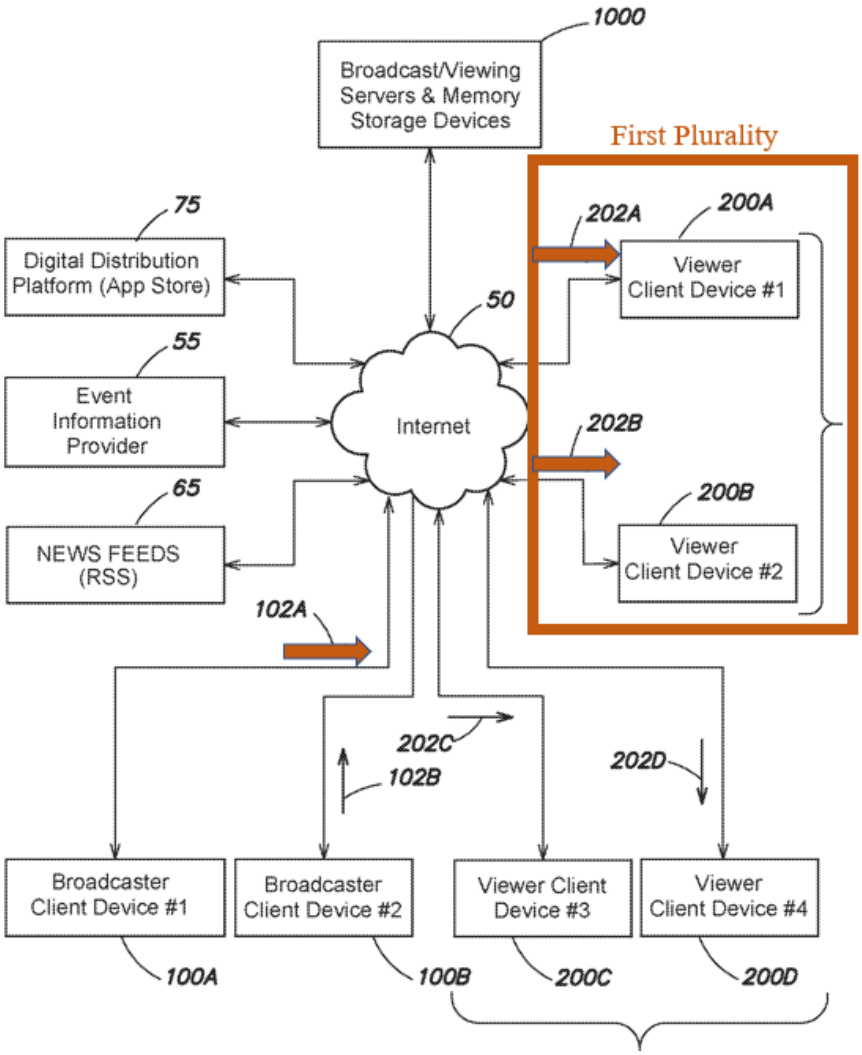

Ex.1003, 9:25-50, Fig. 1A (explaining that Figure 1A depicts providing "a first [VCD] (200A)" of "a first plurality of [VCDs] (200A, 200B)" that receive "copies (202A, 202B) of a first broadcaster's live stream of digital content (102A)."). Likewise, "the first viewer client device of the second plurality of viewer client

devices" simply means one user of the second group of VCDs that receives individual copies of a second live stream of digital content:

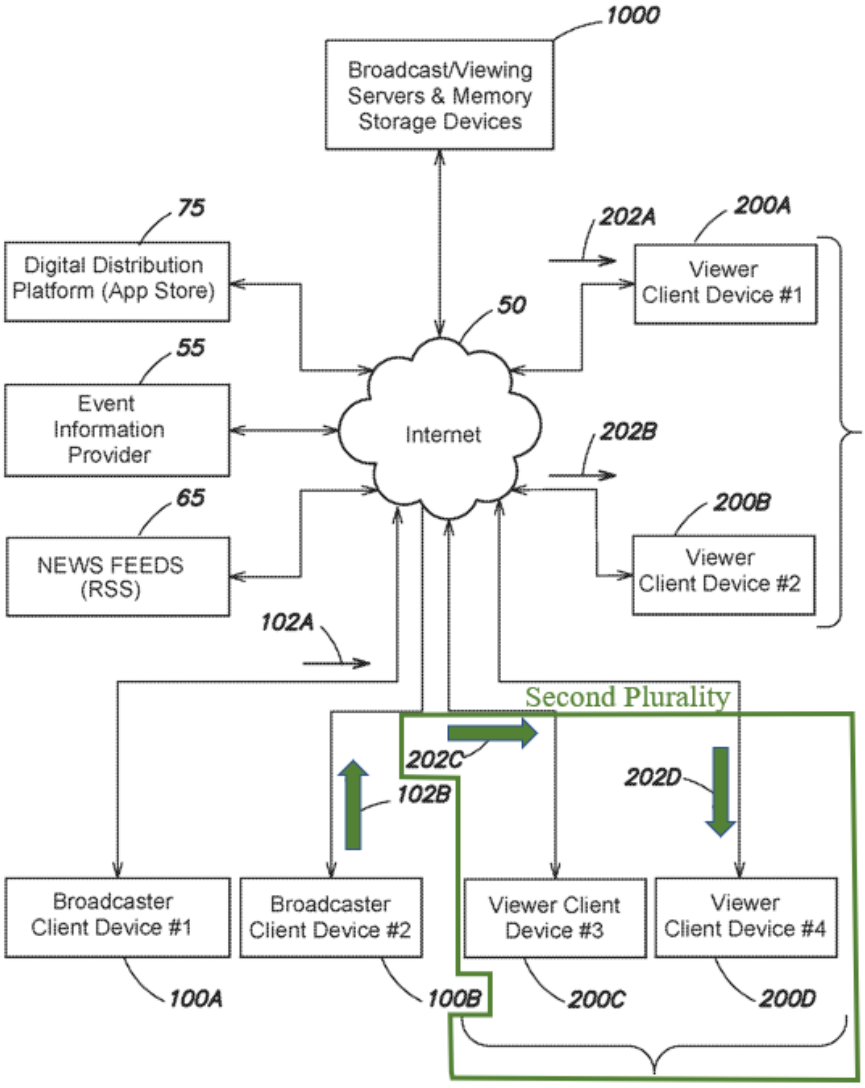

Id., 9:25-50 (explaining that "a first [VCD] (200C)" of "a second plurality of [VCDs] (200C, 200D)" receive "copies (202C, 202D) of a second broadcaster's live stream of digital content (102B)."), Fig. 1A.

340. Ellis discloses a first VCD of a first/second plurality of VCDs because Ellis discloses an "interactive media system" where "any suitable number of users"

may "select any game from the listing" of "available games" to "watch the selected game." Ex.1016 ¶94. For example, a first user in a first group of users (the first plurality) can choose to watch the Yankees broadcast from the YES network. *Id.* ¶55. Meanwhile, a first user of a second group of users can choose to watch a separate live stream of digital content, such as a different game or game commentary. Ex.1016 ¶¶61-62, 132, Fig. 2B. Thus, Ellis discloses multiple first users of multiple different pluralities of VCDs.

(B) First copy of first/second plurality of copies

341. As shown in Figure 1 below, the '687's explains that the first copy of "the first plurality of copies" means a single copy provided to one VCD, where another VCD receives a separate copy over a separate connection:

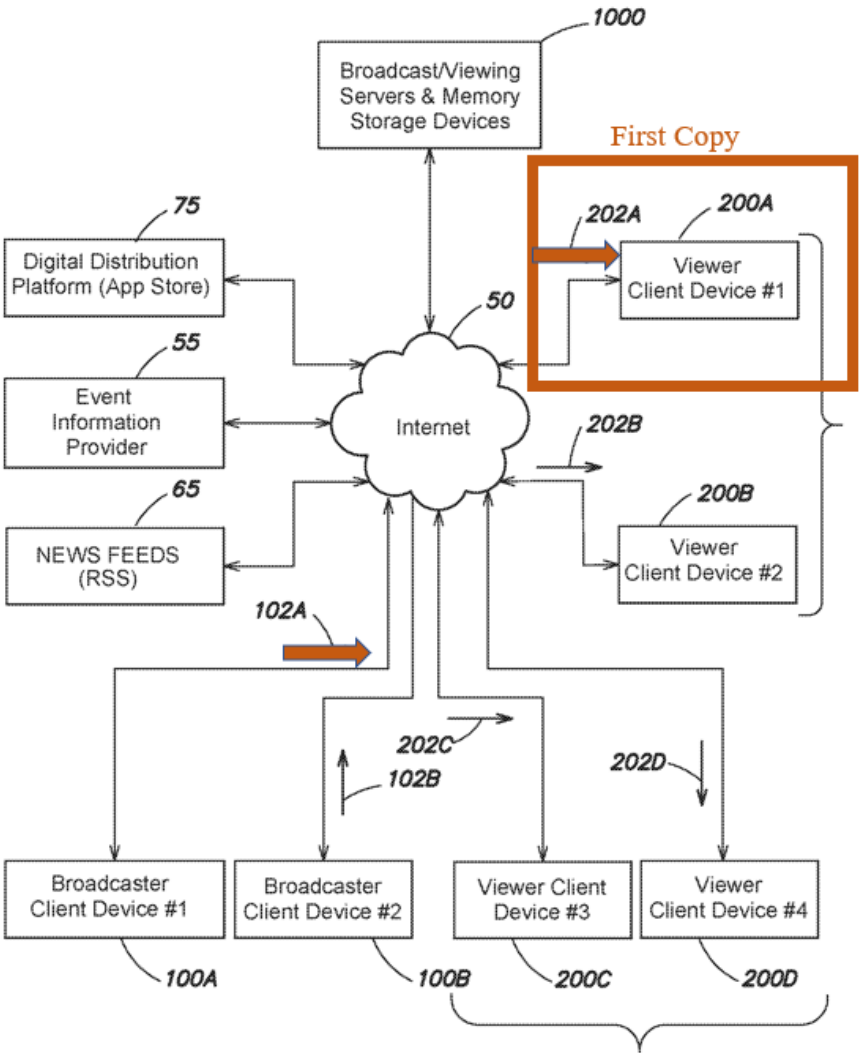

Ex.1003, 9:25-50 (explaining that VCD 200A receives a "first copy (202A)" of "a first plurality of copies (202A, 202B) of a first broadcaster's live stream of digital content (102A)"), Fig. 1. Likewise, the first copy of "the second plurality of copies" means a single copy provided to one VCD, where another VCD receives a separate copy over a separate connection:

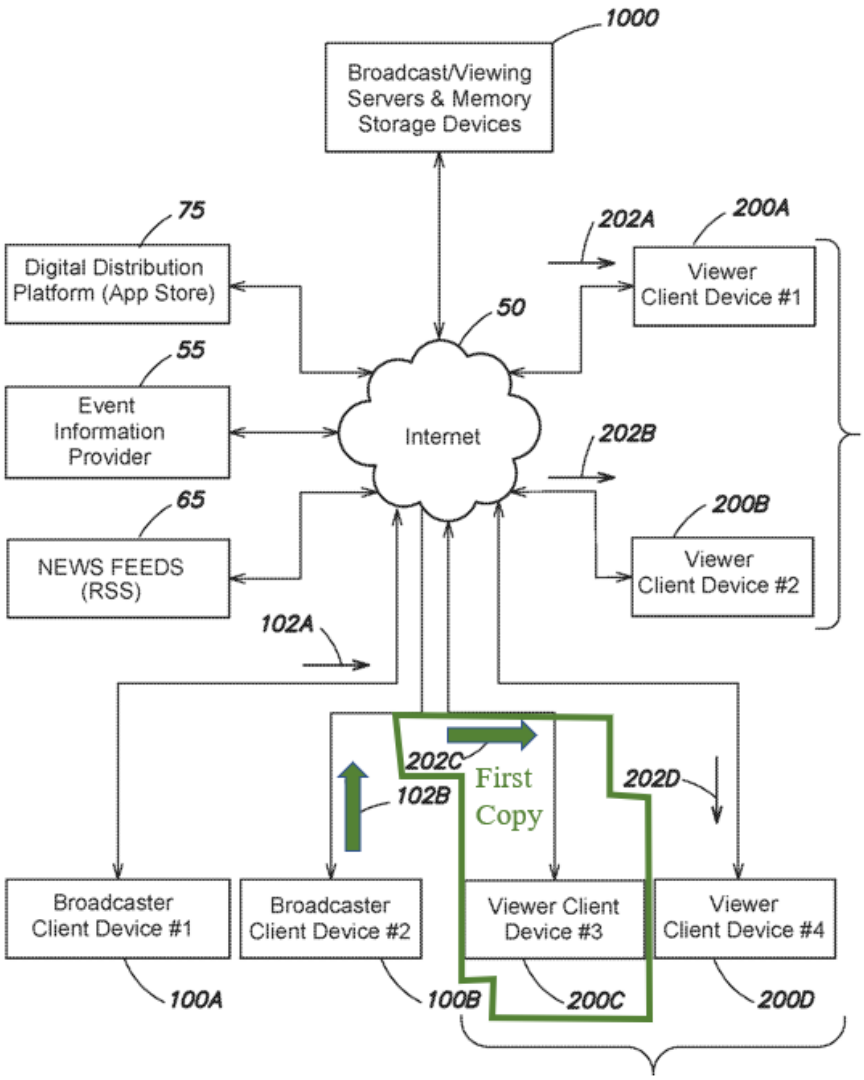

Id., 9:30-47 (noting that the system provides "a first copy (202C)" of "a second plurality of copies (202C, 202D) of a second broadcaster's live stream of digital content (102B)."), Fig. 1.

342. Ellis discloses a first copy of a first/second plurality of copies because Ellis discloses an "interactive media system" where "any suitable number of users" may "select any game from the listing" of "available games." Ex.1016 ¶94. In other words, Ellis discloses a system that provides live streams of digital content from

multiple live games as individual copies. Ex.1016 ¶¶39, 61-62, Fig. 2B. Ellis's content source, an internet server, provides the live stream over a connection path, which can be any "suitable wired or wireless path" including an internet connection. Ex.1016 ¶¶39, 45. Thus, each user would receive an individual copy of the live stream of digital content.

(C) Providing copies via a first/second video Internet communication channel

343. Ellis discloses providing individual copies of multiple different live streams to multiple groups of client devices. §§X.B.1.a.iv(A)-(B), *supra*. Ellis further discloses providing video content over a video Internet communication channel. As an example of an "Internet communication channel," the '687 describes a "video" channel between a media server and a client device to convey video-based commentary. Ex.1003, 5:45-58. Ellis discloses providing video from a content source to user equipment, over a communication path. Ex.1016 ¶39. The content source can be an "internet or network media/web server" and the user equipment "may include computer equipment." *Id.* ¶¶40, 48. The communication path can be "for example, a satellite path, a fiber-optic path, a cable path, or any other suitable wired or wireless path." *Id.* ¶45. Ellis describes the communication path as a unique internet connection between the content source and the user equipment that provides a video live stream: "[f]or IPTV, tuned content may include content to be delivered on a particular network address (e.g., multicast address) on which an IP socket is

currently joined." *Id.* ¶74. Thus, Ellis discloses that each user receives a copy from the content source over a video internet communication path that is unique to each user device. *Id*.

v. Limitation 1.5: "a control server to periodically retrieve, via the Internet, first event information germane to the first live sporting event; and"

344. In my opinion, Ellis and Spivey both disclose this limitation. The '687 explains that the control server is a generic server comprising one or more processors, memory devices, and communication interfaces. Ex.1003, 55:15-25. The control server retrieves "event information" from an "event information provider." *Id.*, 21:46-52. The control server then transmits the event information to the socket server. *Id.,* 19:51-55, 21:47-58. The event information is "germane to" a particular "live sporting event," *e.g.*, score information of one of the live streams of digital content. *Id.,* 19:37-58. Further, the control server may "store at least some portion of retrieved event information." *Id.,* 44:43-45:4.

345. Ellis's SCS comprises one or more processors, memory devices, and communication interfaces. The SCS can be "any suitable content source configured to provide real-time sports scores and game summary information" including a "content manager, content aggregator, or intermediate content provider." Ex.1016 ¶¶42, 142. The SCS periodically retrieves first event information germane to the live sporting event, *e.g.*, score information because the SCS may "provide real-time

sports scores and game summary information, … spread and wagering data, and any other sports-related information to user equipment 102." *Id.* ¶41; *see id.* ¶¶72, 117. A POSA would have understood that this information is retrieved via the internet because that is how real-time data was transferred to users at the time of Ellis and Spivey—including score updates and wagering information. *Id.* ¶¶42, 142. While a periodic time interval, e.g., every five seconds, is not mentioned in Ellis, a POSA would have understood that any system that provides real-time sports statistics, such as Ellis, would necessarily update the statistics on a periodic basis. Alternatively, it would be an obvious design choice to use a periodic update to limit queries to the system and load on the components. Further, as depicted in Figure 1, the SCS may store the received "sports-related information … in database 122:"

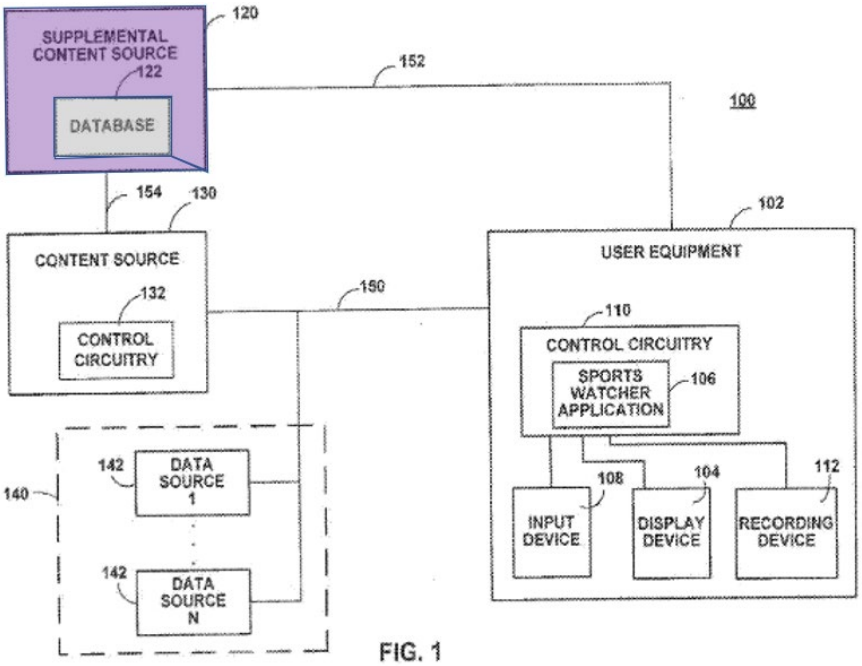

FIG. 1

Ex.1016 ¶42, Fig. 1.

346. To the extent Ellis does not expressly disclose or render obvious this limitation, Spivey's live data server device ("LDSD"), as shown in Figure 4, contains the same basic components as the '687's control server:

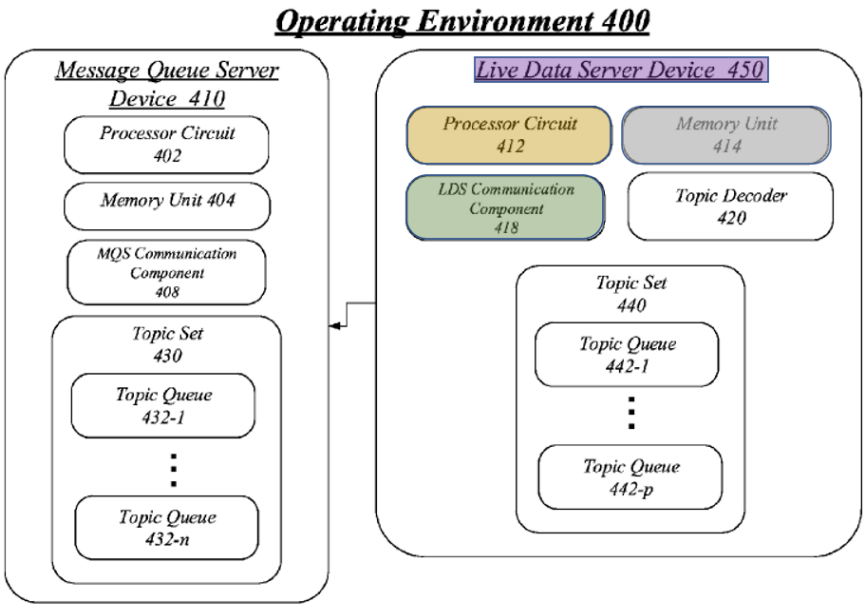

FIG. 4

Ex.1017, Fig. 4. The LDSD is a generic server comprising one or more processors, memory devices, and communication interfaces. *Id*. Moreover, the LDSD performs the same functions as the '687's control server. The LDSD contains an LDS communication component that allows LDSD "to receive live data and transmit the data payloads to MQS device 410." *Id*. ¶55. The live data received by the LDSD includes "sports scores and breaking news" and when related to baseball can include "a score, a play, an error, an injury, a player-at-bat, and so forth." *See id.* ¶¶27, 48, 66 ("A data payload may include … information about the live event in progress, such as a score, a name of the player that scored or made a play, an injury, a penalty,

an error, a new record set, and so forth."). The LDSD retrieves the live data over the internet from the live data source because the live data sources are "associated with the live event," and servers in Spivey communicate over the internet. *Id*. ¶¶35, 37, 178. Thus, a POSA would have understood that Ellis and Spivey both disclose this limitation. And, to the extent Ellis's SCS did not meet this claim limitation, a POSA would replace Ellis's SCS with Spivey's LDSD and MQSD to decrease latency. §IX.A.1, *supra*.

vi. **Limitation 1.6: "at least one socket server communicatively coupled to the control server to:"**

347. In my opinion, Ellis in view of Spivey discloses this limitation. Ellis in view of Spivey discloses a socket server communicatively coupled to the control server (which, as discussed above, is disclosed by Ellis's SCS and Spivey's LDSD). The '687 describes the socket server as a generic server. *See* Ex.1003, 55:15-25. The purpose of the socket server is to "facilitate communication" of "synchronized event information retrieved by the control server" associated with an event between the control server and the VCDs. *Id.,* 20:7-15. The socket server does so by using "one or more sockets … dedicated to the particular event" allowing VCDs "to establish an event information channel with the socket server." *Id.,* 20:15-21. The socket server then receives event information transferred from the control server and shares the event information in "event messages" via the event information channel

"in a synchronized manner" to all viewers "following the particular event." *Id.,* 20:15-21.

348. Ellis discloses providing event information over a separate connection to user equipment. Ex.1016 ¶¶39-41, Fig. 1. A POSA would look to Spivey to add additional backend architecture to reduce latency in the real-time data delivery system. Like the '687's socket server, Spivey's MQSD is a generic server that contains processors, memory, and communication components. Ex.1017 ¶¶35, 53, Figs. 3, 4. Moreover, Spivey's MQSD carries out the same purpose as the '687's socket server. The MQSD "receive[s]" and "process[es] live data to provide live data" to "the subscribed connected client devices substantially simultaneously." *Id.* ¶36; *see id.* ¶¶45 ("[MQS] device 310 may be a representative example of message queue server 120"), 54 (describing that MQSD is "substantially similar" to "MQS device 310"), 96. To accomplish this, the MQSD receives live event data from the LDSD, which just "receive[d] live data:"

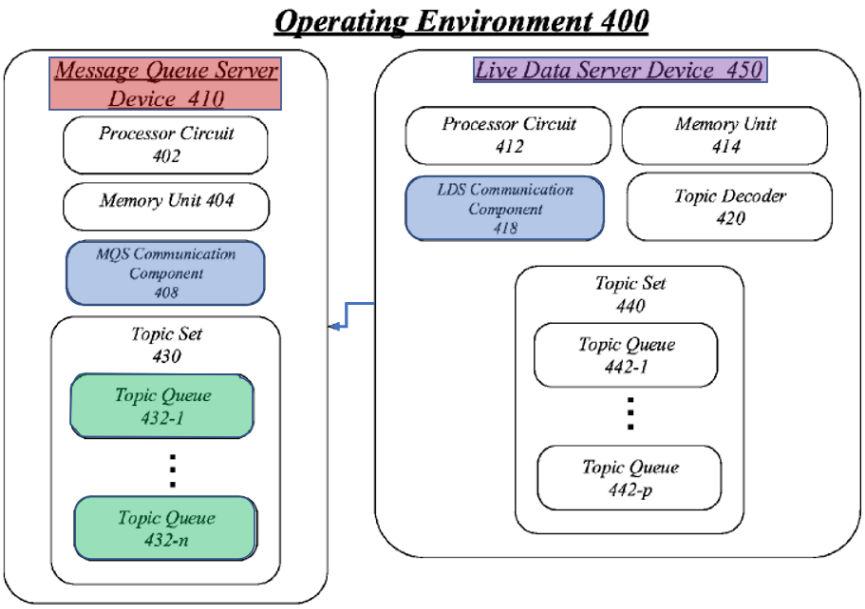

FIG. 4

Id. ¶55, Fig. 4. The MQSD is communicatively coupled to the LDSD through the MQS communication component and the LDS communication component. *Id.* ¶¶46 (disclosing that communication component 308 transmits and receives data), 54 (disclosing that communication component 408 is analogous to 308), 55 ("LDS communication component 418 … allows [LDSD] to … transmit the data payloads to [MQSD].").[8]

349. Then, the MQSD organizes the received live data "into one or more of a plurality of topic queues" dedicated to storing information about "a specific game."

[8] Ellis also discloses a system where multiple servers provide the event information. Ex.1017 ¶47 (noting the SCS's functionality "may be … provided by multiple systems at multiple facilities").

Id. ¶¶47, 52. After sorting the data into the proper topic queues, the MQSD shares the information "substantially simultaneously" to "the subscribed connected client devices." *See id.* ¶96. Thus, a POSA would have understood Spivey's MQSD as disclosing the '687's socket server being communicatively coupled to a control server.

vii. **Limitation 1.7: "receive from the control server at least the first event information; and"**

350. In my opinion, Ellis in view of Spivey discloses this limitation. The '687 explains that the "control server passes at least the first score information" to the "socket server." Ex.1003, 21:46-58 ("[F]irst event information includes at least first score information …."). The '687 does not require any specific transmission method. *See id.* The LDSD (the control server) "receive[s] live data and transmit[s] the data payloads to [MQSD (the socket server)]." Ex.1017 ¶¶55. Data payloads may include "a score, a player name, a play, and so forth …." *Id.* ¶117. Thus, a POSA would have understood that Spivey discloses a socket server receiving from the control server at least the first event information.

viii. **Limitation 1.8: "transmit the first event information to at least the first viewer client device of the first plurality of viewer client devices via a first event information Internet communication channel between at least one first event socket of the at least one socket server and the first viewer client device of the first plurality of viewer devices, wherein the at least one first event socket corresponds to the**

first event information germane to the first live sporting event."

351. In my opinion, Ellis in view of Spivey discloses this limitation. This limitation requires (1) a first socket on the socket server that is specifically dedicated to storing information about the first live event, (2) a first viewer client device of a group of VCDs that are watching a live stream of the first live event, and (3) transmitting event data about the first live event from the first socket to the VCD using an internet connection. *See* Ex.1003, Claim 1. These features are shown in Figure 2:

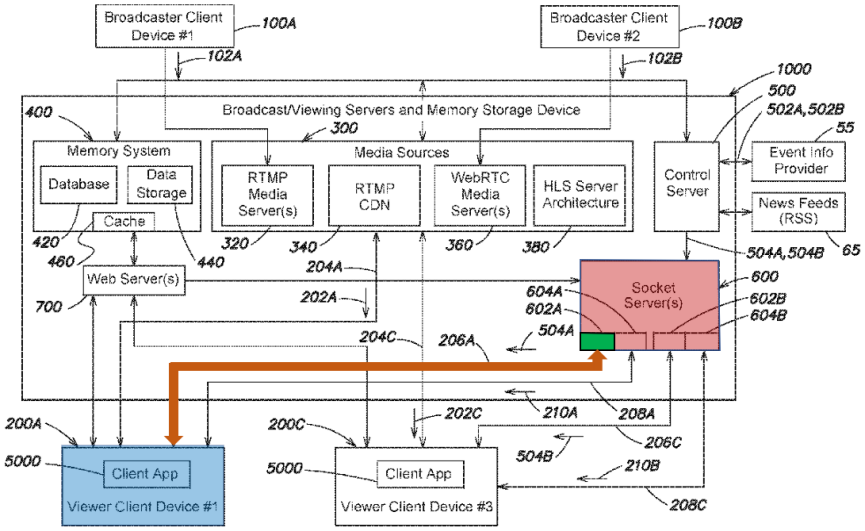

FIG. 2

Id., Fig. 2.

(A) First event socket corresponding to the first event information germane to the first live sporting event

352. The '687 explains that the socket server contains "one or more first event sockets 602A dedicated to the first event information." Ex.1003, 21:58-62.

The first event socket has a corresponding EventID that the VCD "uses … to connect to [the] socket," *e.g.*, by using a "URL including the … EventID in a path of the URL." *Id.,* 21:63-22:8. Thus, a POSA would have understood a "socket" to be a uniquely addressable communication endpoint on a server where first event information is provided to a VCD. Ex.1003 at 20:55-21:4, 21:63-22:16. A first event socket corresponding to the first event information germane to the first live sporting event is simply a socket where information about one sporting event is provided to VCDs.

353. In the same way, Spivey's topic queues are "where data payloads are placed" that, for example, "relate to a specific game between two NFL teams." Ex.1017 ¶¶51-52. The data payloads, "[w]hen then live event is a sporting event," include, "for example, a score, a play, …, and so forth." *Id.* ¶48. Topic queues have a corresponding "topic label" which is used "to identify a topic queue." *Id.* ¶49. "A topic label may be, for example" a "text string such as gamecenter.nfl.ravenssteelers." *Id.* ¶66.

354. Client devices use these topic label text strings to connect and subscribe to MQSD's topic queues. First, client devices "request a live data connection" with the MQSD by "select[ing] or enter[ing] the address or connection information to a

particular" MQSD. *See id.* ¶¶81-82.[9] This "address may resemble a uniform resource locator (URL)." *Id.* ¶82. Second, as shown in Figure 9, client devices can use the topic labels to select "the topics available from [MQSD] in a topic selection list" and "subscribe to" those topic queues:

[9] Spivey often discusses a connection between the client device and the system using a live data access server ("LDAS"), however, Spivey also discloses that the message queue server device may be "accessible to clients over the network directly." Ex.1017 ¶36. For example, "MQS communication component 308 … may push data from topic queues 332-1, 332-n to the subscribers of the topics corresponding to those topic queues." *Id.* ¶46. Also, the system does not require an LDAS, only that it "may include a[n] [LDAS]." *Id.* ¶38. Thus, a POSA would have understood Spivey to disclose a direct connection between the client devices and MQSD. §IX.A, *supra.* A POSA would use this implementation because reducing the amount of server transfers would reduce latency, which is Spivey's main purpose.

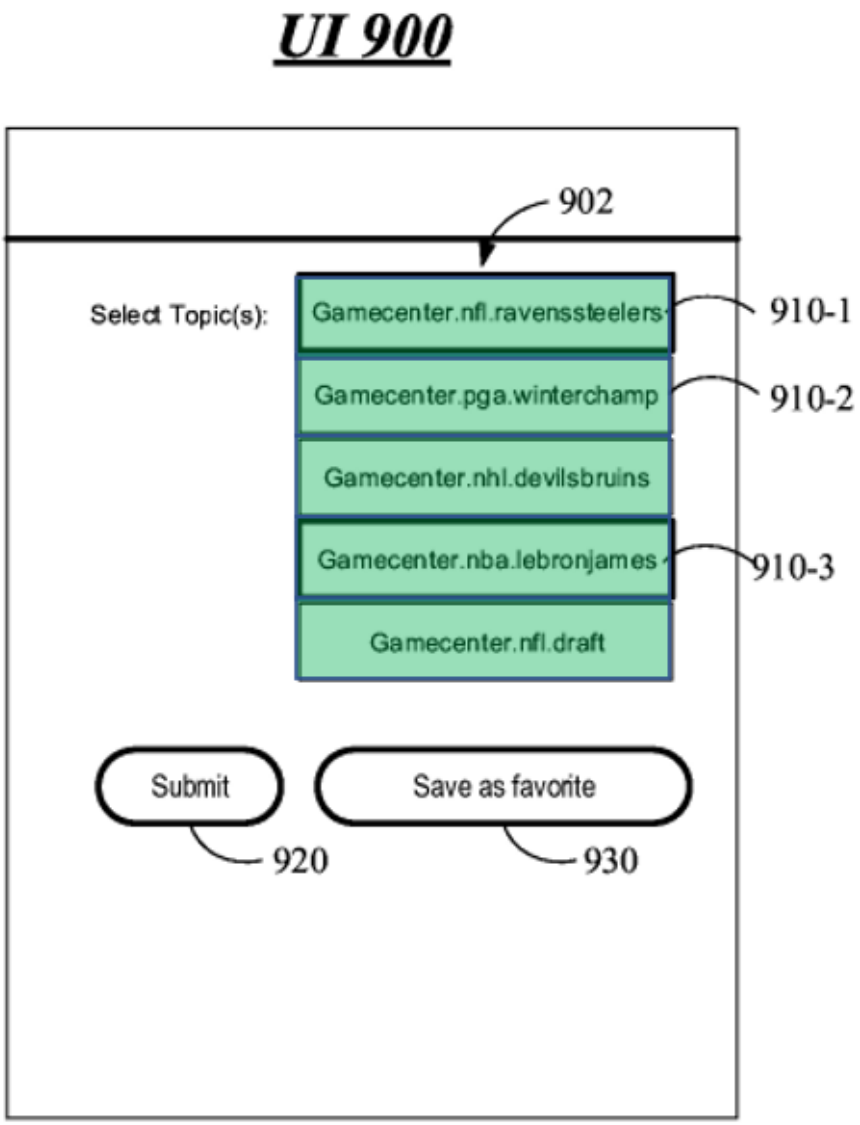

FIG. 9

Id. ¶¶83-84, Fig. 9. Third, "the data payload" may be pushed to the subscribed connected devices that requested that topic. *Id.* ¶96. Thus, a POSA would have understood that Spivey's topic queues disclose the '687's first event sockets corresponding to the first event information germane to the first live sporting event.

(B) Transmitting the first event information to at least the first VCD of the first plurality of VCDs

355. As discussed in Limitations 1.3 and 1.4, Ellis discloses a first VCD of the first plurality of VCDs. *See* §X.B.1.a.iv, *supra.* Both Ellis and Spivey further disclose transmitting the first event information to the first/second VCD of the first plurality of VCDs. For example, in Spivey, the MQSD "may push data from topic queues … to the subscribers of the topics corresponding to those topic queues." Ex.1017 ¶46. In Ellis, SCS may be configured "to provide real-time sports scores and game summary information, … to user equipment 102." Ex.1016 ¶41.

(C) Transmitting via a first event information Internet communication channel between at least one first event socket of the at least one socket server and the first VCD of the first plurality of VCDs

356. According to the '687, a "'communication channel' refers to a physical or logical connection over a transmission medium to convey information signals from one or more senders to one or more receivers." Ex.1003, 5:38-45. The '687 concedes these connections "would be readily appreciated in the relevant arts." *Id.* The '687 describes a first "event information" Internet communication channel as one between a first event socket of the socket server and the client device that conveys event information related to the first event. *Id.,* 5:45-58. The first event socket has a corresponding EventID that the VCD "uses … to connect to [the] socket," *e.g.*, by using a "URL including the … EventID in a path of the URL." *Id.,* 21:63-22:8. Thus, a POSA would appreciate that this connection and

communication channel is an internet connection between a server that contains information related to a live event and a user who is streaming, from a different server, video of the same live event. Ex.1003, 5:38-45, 22:62-23:9.

357. Ellis in view of Spivey discloses providing first event information over a separate internet communication channel. Spivey's entire system is based on providing "live event data in real time." Ex.1017, Abstract. The MQSD can be an "internet server." *See id.* ¶35. Spivey communicates with client devices over "any … combination of wired and/or wireless networks including … the Internet." *Id.* ¶179. For example, client devices "may request and participate in a websocket connection," which "typically comprises a two-way connection between two entities." *Id.* ¶¶43, 61. Moreover, consistent with Spivey, Ellis discloses providing event information over a separate communication path 152 than the video signal 150. Ex.1017 ¶39-41, Fig. 1. Thus, a POSA would have understood Spivey to disclose transmitting first event information via a separate internet connection.

358. Further, this information is provided via a connection between a topic queue and the first user equipment device. Users can access the MQSD using a URL. *See* Ex.1017 ¶¶81-82. Then, the user can access the specific topic queue she wishes to receive information from by using a text string, *e.g.*, a topic label or Event ID, associated with a topic queue. *Id.* ¶179, Fig. 9 ("Gamecenter.nfl.ravenssteelers."). Thus, A POSA would have understood that

Ellis in view of Spivey discloses distributing event information from a socket to a user device over an internet connection. Further, A POSA would have understood that the internet connection is established using a URL and text string identifying a uniquely addressable communication endpoint on the MQSD, where first event information is transmitted to a VCD.

b. Dependent Claim 8

i. Limitation 8.0: "The system of claim 1, further comprising a memory system communicatively coupled to the control server, the memory system including a database, wherein in B) the control server:"

359. In my opinion, Ellis in view of Spivey discloses this limitation. *See* Claim 1. §X.B.1.a.

360. Ellis and Spivey disclose a memory system, including a database, communicatively coupled to the control server. The '687 explains that the database must be capable of storing "information." *See* Ex.1003, 17:48-55. Thus, a POSA would have understood that the '687's database is a generic server where an organized collection of structured data is stored.

361. In the same way, as shown in Fig. 1, Ellis's SCS is communicatively coupled to a database that stores "some or all of this sports related information" as well as "network viewing statistics and editor picks of sporting events:"

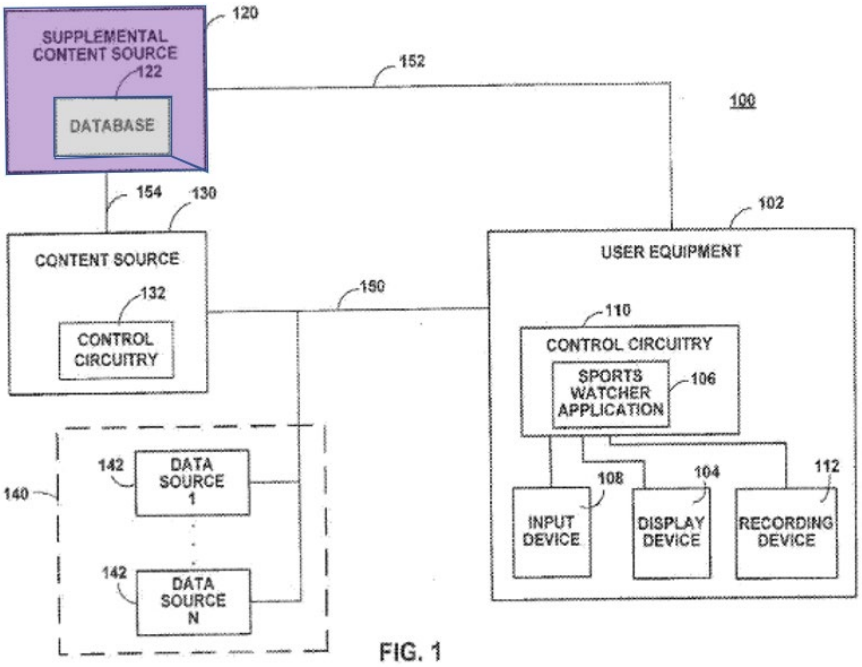

FIG. 1

Ex.1016 ¶¶42-43, 46 (explaining that the SCS's "functionality may be provided by multiple systems at multiple facilities"), Fig. 1.

362. To the extent Ellis does not expressly disclose or render obvious this limitation, Ellis in view of Spivey discloses this limitation. Spivey discloses a memory unit, including a database, communicatively coupled to the control server, Spivey's live data server device ("LDSD"), as shown in Figure 4:

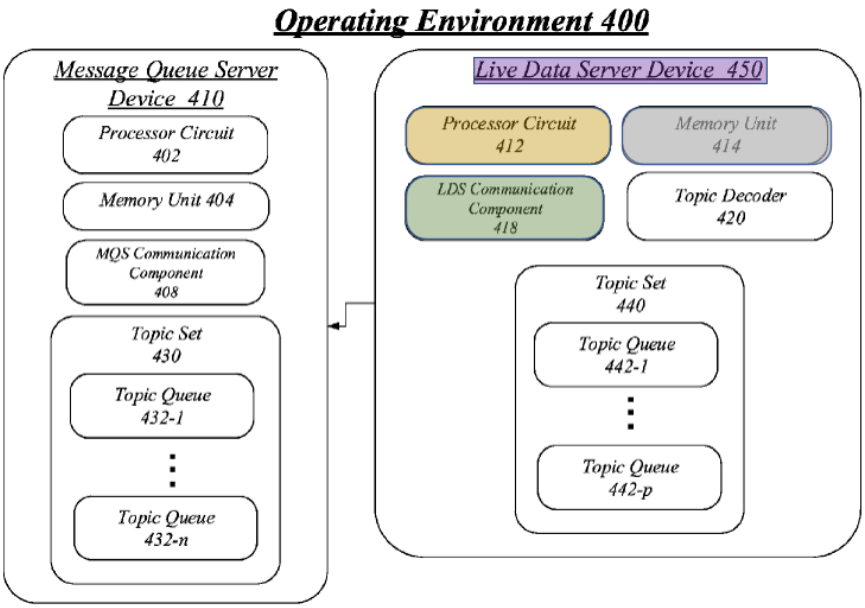

FIG. 4

Ex.1017, Fig. 4. Spivey discloses that the LDSD's memory units may be "higher speed" units such as "solid state drives (SSD) and any other type of storage media suitable for storing information." *Id.* ¶167; *see id.* ¶161 ("[C]omputing architecture 2300 may comprise … an electronic device" such as "those described with reference to Figs. 1-5."). Further, Spivey discloses that the LDSD is coupled to an aggregator component, which includes a buffer, which contains its own memory unit. *Id.* ¶¶107, 116, 124. Moreover, Spivey discloses that the LDSD may be coupled with a remote computer, which "typically includes many or all of the elements described in computer 2302" including "a memory/storage device 2350." *Id.* ¶172, Fig. 23. Thus, a POSA would have understood that Ellis's database and Spivey's memory units disclose memory systems including a database communicatively coupled to the control servers.

ii. **Limitations 8.1-8.7: "retrieves first event data for the first live sporting event, the first event data including at least one of the type of the first live sporting event;**
an event identifier (EventID) for the first live sporting event;
a status of the first live sporting event;
progress details for the first live sporting event;
a date and/or time of the first live sporting event; and
event participant data regarding participants in the first live sporting event;"

363. In my opinion, Ellis in view of Spivey discloses these limitations. These limitations require a control server to retrieve first event data for the first live sporting event including at least one of an event identifier (*e.g.*, source ID, topic label), a status of the live event, progress details, a date and/or time, and event participation data as explained above. Ellis discloses retrieving, among other data, at least the time remaining (progress details), quarter (status), down, and yards remaining. Ex.1016 ¶72, Fig 4. Ellis also discusses providing a "program schedule" (date/time), source ID (event identifier), and type of event, e.g., "college football." *Id*. ¶3, Fig. 2, 22. Spivey discloses retrieving, among other data, at least a score, an injury, an error, a name of the player that scored or made a play (participant data). Ex.1017 ¶66. Thus, Ellis in view of Spivey discloses these limitations. §X.B.1.a.v, *supra*.

iii. **Limitations 8.8 and 8.9: "normalizes at least the date and/or time of the first live sporting event to a reference standard time to provide a**

normalized date and/or time; and stores the first event data and the normalized date and/or time in the database."

364. In my opinion, Ellis in view of Spivey renders this limitation obvious. Normalizing that data means nothing more than "converting" the event data "from UTC to EST/EDT" *i.e.*, a "particular reference frame." Ex.1003, 46:64-47:17. In any system that provides event data about multiple different live events to users that are not restricted geographically, such as Ellis's content distribution system, it would be obvious and standard to first convert the time stamps to a local time before storing the data, i.e., normalize the data, including the date and/or time of the first live sporting event to a reference standard time to provide a normalized date and/or time, to a standard time. This is particularly so in this case, where Ellis contemplates using this data to allow users to place bets. Ex.1016 ¶13. A POSA would structure such a system to reduce formatting and conversion errors, such that as many conversions as possible would be under the control of the centralized system, e.g., the database, rather than occur at the user device. Also, Ellis and Spivey both disclose storing the first event data, including normalized date and/or time data in the database. §X.B.1.b.i, *supra*. Thus, Ellis in view of Spivey renders this limitation obvious.

c. Dependent Claim 9

i. **Limitation 9.0: "The system of claim 8, wherein:"**

365. In my opinion, Ellis in view of Spivey discloses this limitation. *See* Claim 8. §X.B.1.b, *supra*.

ii. **Limitation 9.1: "the progress details include the first event information;"**

366. In my opinion, Ellis and Spivey both disclose this limitation. The '687 explains that progress details include "quarter, period, inning, half-time; for baseball—balls, strikes, base information; for football—possession, down, yards to go; for basketball—timeouts, fouls." Ex.1003, 47:4-15. Ellis discloses an SCS providing "detailed game information, including time remaining, quarter, down, yards remaining to first down, field location, and summary information:"

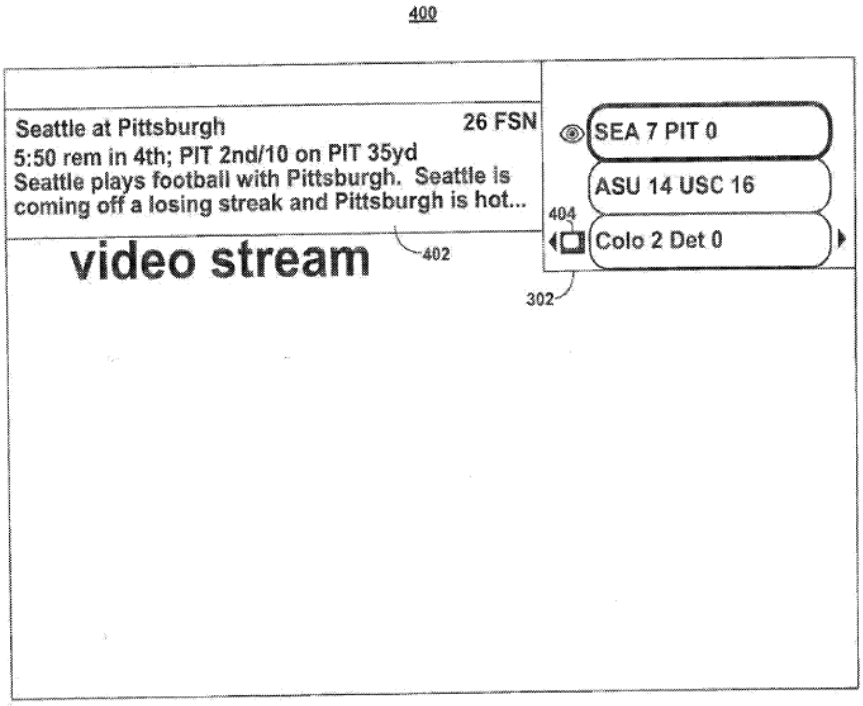

FIG. 4

Ex.1016 ¶72. Spivey discloses providing "a player at-bat," which would include balls and strikes. Ex.1017 ¶48. Thus, a POSA would have understood that Ellis and Spivey both disclose progress details, i.e., one or more items about a moment in a live event, that include the first event information.

iii. **Limitation 9.2: "the control server periodically retrieves the progress details from the event information provider and updates the first event information; and"**

367. Ellis and Spivey both disclose this limitation. Both Ellis and Spivey disclose a control server periodically retrieving real-time information from the event information provider that includes progress details. *See* Ex.1017 ¶48 (disclosing a score, play, error, and at-bat updates); §§X.B.1.a.v, X.B.1.c.ii, *supra*. The only remaining portion of this limitation is that the system needs to "update the first event information." A POSA would have understood that this claim to require that the system update the database of Claim 8 with the progress details that were just retrieved. Ellis in view of Spivey discloses this limitation for the same reasons it discloses "stor[ing] the first event information … in the database." §X.B.1.c.i, *supra*.

iv. **Limitation 9.3: "for each update of the first event information, the control server queues an asynchronous message including the updated first event information for transmission to the at least one first event socket of the at least one socket server."**

368. In my opinion, Ellis in view of Spivey discloses this limitation. The term "asynchronous message" is only used in the '687's claims. *See* Ex.1003, Claim 9. But the '687 does discuss an "asynchronous queue" as a set of "tasks to process" that can either be small "(e.g., at any given second it may be between 0-10 items)" but can "grow to a larger size (e.g., 1000 items)." *Id.,* 47:66-48:9. Thus, a POSA would have understood that this limitation requires that for each first event information update at the control server, the control server readies a message including the first event information, that will be processed and sent to the socket server's first event socket in turn.

369. In the same way, Spivey's LDSD "may have its own topic set and topic queues." Ex.1017 ¶56. "Upon receiving a message," *e.g.*, live event data, the LDSD "may sort the data payload of message 602 into a topic queue, such as topic queue … 442-1." *Id.* ¶67. Then, the LDSD may "transmit the data payloads" to MQSD's topic queues:

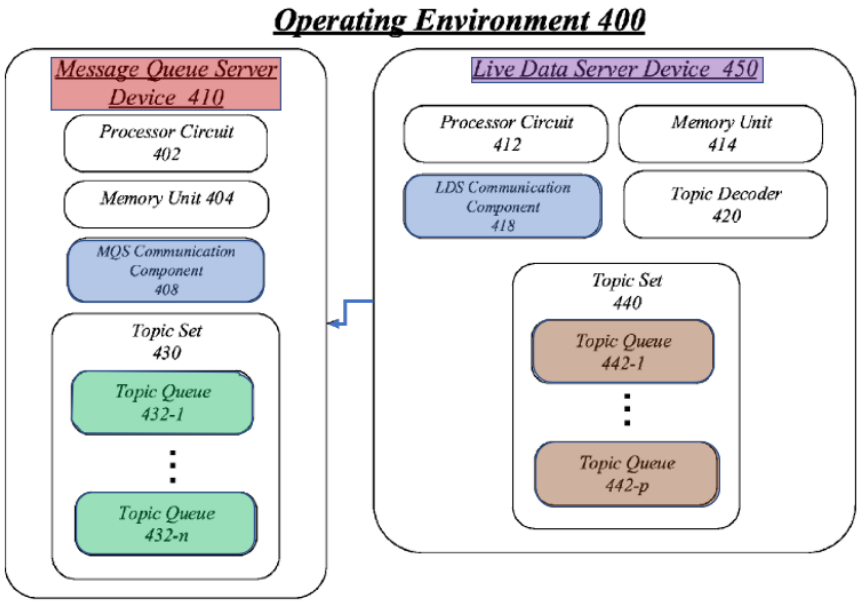

FIG. 4

See id. ¶¶55-56, Fig. 4. Further, Spivey explains that "topic queues may be a queue data structure, in particular a first-in-first out queue, where data payloads are placed." *Id.* ¶51. In other words, the data is placed in the LDSD's topic queue, and is processed in the order that it is received, just like the '687 describes this limitation. Thus, a POSA would have understood that when the LDSD places the updated real-time data in the topic queues for transmission to the MQSD's topic queues, it is in fact queuing an asynchronous message, including the updated first event information, for transmission to the at least one first event socket of the at least one socket server.

d. Independent Claim 19

i. Independent 19.0: "A system for providing a first plurality of copies of a first live stream of digital content relating to a first live sporting event to a first plurality of viewer client devices,

and for providing a second plurality of copies of a second live stream of digital content relating to a second live sporting event to a second plurality of viewer client devices, the system comprising:"

370. In my opinion, Ellis discloses this limitation. This limitation is substantially the same as the '687's limitation 1.0, except that limitation 19.0 requires the live stream of digital content be related to a second live sporting event. *See* Ex.1003, Claims 1, 19. Regardless, Ellis discloses a system where there are multiple live streams of digital content about multiple different live sporting events. §X.B.1.a.

ii. **Limitation 19.1: "A) a plurality of media sources to:"**

371. In my opinion, Ellis discloses this limitation. *See* Limitation 1.1. §X.B.1.a.ii, *supra.*

iii. **Limitation 19.2: "receive the first live stream of digital content and the second live stream of digital content;"**

372. In my opinion, Ellis discloses this limitation. *See* Limitation 1.2. §X.B.1.a.iii, *supra.*

iv. **Limitations 19.3 and 19.4: "provide a first copy of the first plurality of copies to a first viewer client device of the first plurality of viewer client devices via a first Internet communication channel between the plurality of media sources and the first viewer client device of the first plurality of viewer client devices; and provide a first copy of the second plurality of copies to a**

first viewer client device of the second plurality of viewer client devices via a second Internet communication channel between the plurality of media sources and the first viewer client device of the second plurality of viewer client devices;"

373. In my opinion, Ellis discloses this limitation. *See* Limitations 1.3 and 1.4. §X.B.1.a.iv, *supra*. These limitations are substantially the same as the '687's limitations 1.3 and 1.4, except that the communication channel has a different name. Ex.1003, Claims 1 (first/second "video Internet communication channel"), 19 (first "Internet communication channel"). This name difference does not change the functionality or structure of the channel, which is a generic internet communication channel. *See* §X.B.1.a.iv(C), *supra*.

v. **Limitation 19.5: "B) a control server to periodically retrieve, via the Internet, first event information germane to the first live sporting event and second event information germane to the second live sporting event; and"**

374. In my opinion, Ellis and Spivey both disclose this limitation. This limitation is substantially the same as the '687's limitation 1.5, except that the control server in limitation 19.5 retrieves second event information germane to the second live sporting event. Ex.1003, Claims 1, 19. Ellis and Spivey both disclose a multiple-sporting-event system that retrieves real-time data for all events. §X.B.1.a.v, *supra*. Thus, a POSA would have understood that Ellis discloses this limitation for the same reasons as stated above. §X.B.1.a.v, *supra.*

vi. **Limitation 19.6: "C) at least one socket server communicatively coupled to the control server to:"**

375. In my opinion, Ellis in view of Spivey discloses this limitation. *See* Limitation 1.6. §X.B.1.a.vi, *supra.*

vii. **Limitation 19.7: "receive from the control server at least some of the first event information and at least some of the second event information; and"**

376. In my opinion, Ellis in view of Spivey discloses this limitation. This limitation is substantially the same as the '687's limitation 1.7, except that the socket server in limitation 19.7 receives first and second event information. Ex.1003, Claims 1, 19. Ellis in view of Spivey discloses a system where real-time data from multiple live events is transferred to the MQSD. §X.B.1.a.vii, *supra*. Thus, a POSA would have understood that Ellis in view of Spivey discloses this limitation. §X.B.1.a.vii, *supra.*

viii. **Limitations 19.8 and 19.9: "transmit the at least some of the first event information to the first viewer client device of the first plurality of viewer client devices via a third Internet communication channel between at least one first event socket of the at least one socket server and the first viewer client device of the first plurality of viewer devices; and transmit the at least some of the second event information to the first viewer client device of the second plurality of viewer client devices via a fourth Internet communication channel between at least one second event socket of the**

at least one socket server and the first viewer client device of the second plurality of viewer devices."

377. In my opinion, Ellis in view of Spivey discloses these limitations. These limitations are substantially the same as the '687's limitations 1.8 except that there is (1) a different name for the communication channel and (2) a second live event information. Ex.1003, Claims 4, 19. The different channel name alters nothing. §X.B.1d.iv, *supra.* Ellis in view of Spivey discloses a system of providing real-time data from multiple live games to multiple groups of users over separate (third/fourth) internet connection feeds. §§X.A.2.a, X.B.1.a These feeds would be third/fourth connections because the first/second connection relates to the video connections. Thus, a POSA would have understood that Ellis in view of Spivey discloses these limitations for the same reasons as stated above. §X.B.1.a.viii, *supra.*

e. Dependent Claim 20

i. **Limitations 20.0-20.1: "The system of claim 19, wherein: in A), the plurality of media sources:"**

378. In my opinion, Ellis in view of Spivey discloses this limitation. *See* Claim 19. §X.B.1.d, *supra.*

ii. **Limitations 20.2-20.3: "provide a second copy of the first plurality of copies to a second viewer client device of the first plurality of viewer client devices via a third video Internet communication channel between the plurality of media sources and the second viewer client device of the first plurality of viewer client devices; and provide a second copy of the**

second plurality of copies to a second viewer client device of the second plurality of viewer client devices via a fourth video Internet communication channel between the plurality of media sources and the second viewer client device of the second plurality of viewer client devices; and"

379. In my opinion, Ellis in view of Spivey discloses these limitations. These limitations are substantially the same as limitations 19.3 and 19.4. Specifically, these limitations add providing a second copy, *i.e.*, another copy, of the first/second plurality of copies to a second VCD of the first/second VCDs via a third/fourth video Internet communication channel:[10]

[10] There is no first/second video communication channel in Claim 19. This is a copy and paste error from Claim 4.

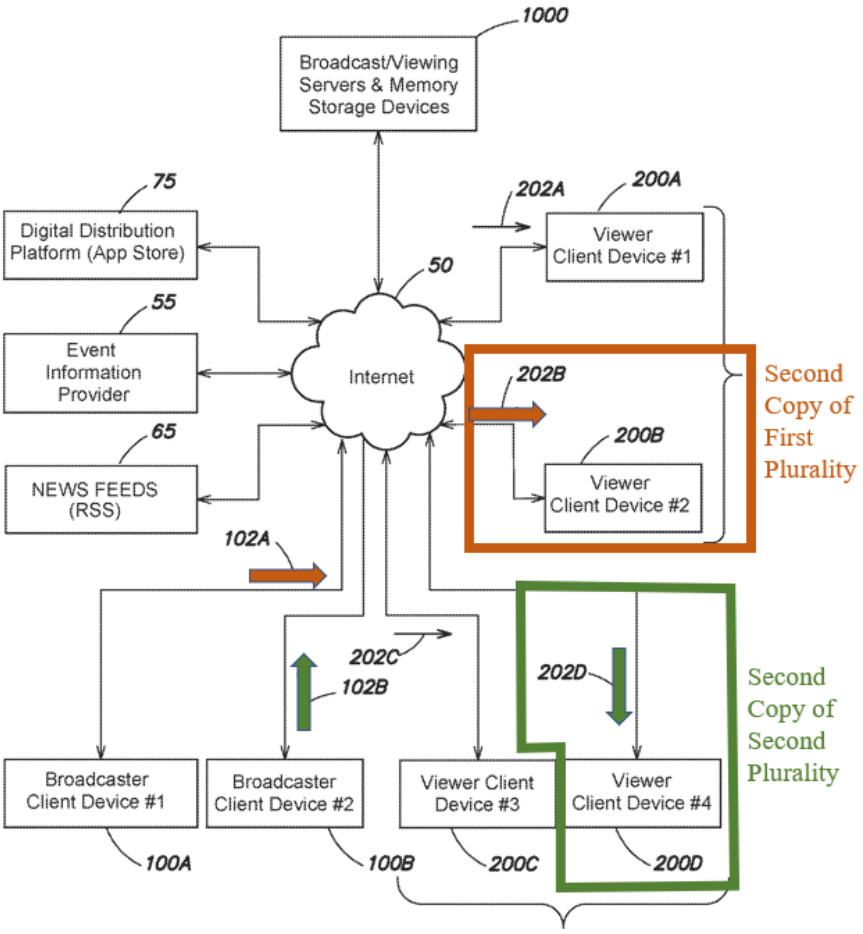

Ex.1003, 15:22-33, Fig. 1A.

380. Ellis discloses these limitations for the same reasons as discussed in §X.B.1.d.iv, *supra.* Specifically, Ellis in view of Herzog discloses providing individual copies, to multiple different users, of multiple different live streams of digital content, related to different live sporting events, over individual "video" internet connections. §X.B.1.d.iv, *supra*.

iii. **Limitation 20.4: "in C), the at least one socket server:"**

381. In my opinion, Ellis in view of Spivey discloses this limitation. *See* Limitation 19.6. §X.B.1.d.vi, *supra.*

iv. **Limitation 20.5-20.6: "transmits at least the first event information to the second viewer client device of the first plurality of viewer client devices via a third event information Internet communication channel between the at least one first event socket of the at least one socket server and the second viewer client device of the first plurality of viewer devices; and transmits at least the second event information to the second viewer client device of the second plurality of viewer client devices via a fourth event information Internet communication channel between the at least one second event socket of the at least one socket server and the second viewer client device of the second plurality of viewer devices."**

382. In my opinion, Ellis in view of Spivey discloses these limitations. These limitations are substantially the same as limitations 19.8 and 19.9. §X.B.1.d.viii, *supra*. These limitations simply add transmitting the first/second event information, to a second VCD, of the same first/second plurality of VCDs.

383. Both Ellis and Spivey further disclose transmitting the first/second event information to the second VCD of the previously mentioned first/second plurality of VCDs over an individual third/fourth event Internet communication

channels.[11] For example, in Spivey, the MQSD "may push data from topic queues … to the subscribers of the topics corresponding to those topic queues." Ex.1017 ¶46. In Ellis, SCS may be configured "to provide real-time sports scores and game summary information, … to user equipment 102." Ex.1016 ¶41; *see id.* ¶39 ("Any suitable number of users may have one or more user equipment … 102."). Thus, Ellis in view of Spivey discloses these limitations because both disclose transmitting the first/second event information to multiple VCDs of the first/second plurality of VCDs over separate internet connections.

f. Dependent Claim 21

i. **Limitations 21.0-21.2: "The system of claim 19, wherein in C), the at least one socket server further: transmits and receives first chat information regarding the first live stream of digital content via at least one first chat/system event Internet communication channel between at least one first chat/system event socket of the at least one socket server and the first viewer client device of the first plurality of viewer client devices, wherein the at least one first chat/system event socket corresponds to the first chat information; and**
transmits and receives second chat information regarding the second live stream of digital content via at least one second chat/system event Internet communication channel between at least one second chat/system event socket of

[11] There is no first/second event information Internet communication channel in Claim 19. This is a copy and paste error from Claim 4.

the at least one socket server and the first viewer client device of the second plurality of viewer client devices, wherein the at least one second chat/system event socket corresponds to the second chat information."

384. In my opinion, Ellis in view of Spivey discloses these limitations. *See* Claim 19, §X.B.1.d. Ellis in view of Spivey discloses transmitting and receiving chat information via individual communication channels between a first/second socket and a first VCD of a first/second plurality of VCDs who are watching different events. §§X.B.1.a.iv, *supra*. The '687 explains that this chat/system event communication channel may be any generic internet communication channel. Ex.1003, 5:38-45. These limitations only further require that the system "transmits and receives" first/second "chat information regarding" the first/second "live stream of digital content" over another separate, individual connection between a first/second "chat/system event socket" and a first/second VCD:

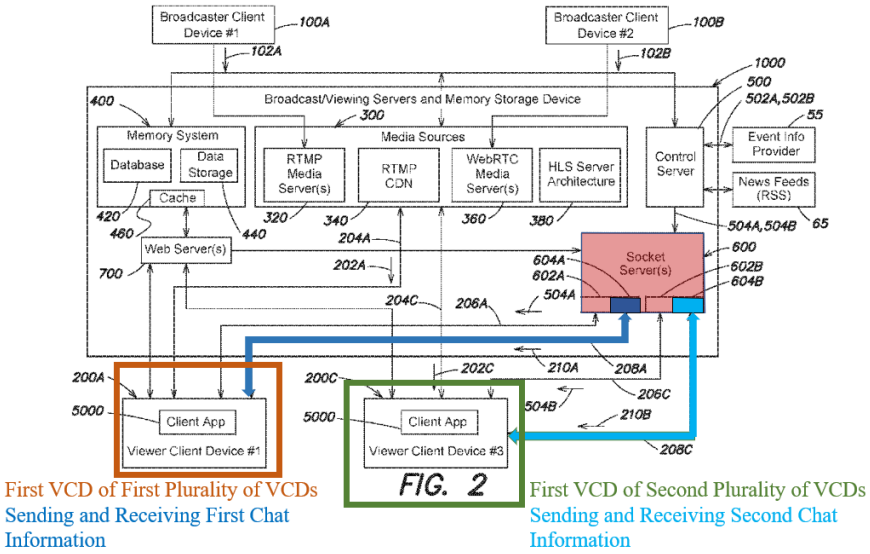

Ex.1003, 22:17-48, Claim 5, Fig. 2. In sum, these limitations require that chat information is transmitted and received over a third communication channel from another socket that is dedicated for chat/system information.

385. The ’687 describes chat information as communications “between a given broadcaster … and corresponding viewers … of chat messages.” Ex.1003, 20:22-27. Further, “viewers of the same live event may” view different video feeds of the same live event and “participate in different chat information exchanges … and all share the same event information in a synchronized manner.” *Id.*, 23:17-28. Additionally, the ’687’s explanation of chat/system event sockets indicate that they are the same as the other sockets, *i.e.*, a communication endpoint on a server that is uniquely addressable, *e.g.*, by using an identifier (StreamID) that may be contained, *e.g.*, in a URL. Ex.1003, 20:55-21:4, 21:63-22:16, 23:55-24:15. The only difference is that these sockets store and send chat messages, not “event data.” *See* Ex.1003, 23:55-24:15.

386. Ellis discloses sending and receiving chat information because users “may also leave feedback regarding the commentary that other users in the media system may view when they access the same commentary.” Ex.1016 ¶132. Thus, a POSA would have understood that Ellis discloses a system that transmits and receives first/second chat information regarding the first/second live stream of

digital content. *Id.* ¶126 ("To create and send a message (e.g., instant message or email message), the user may select send message option.").

387. Ellis also discloses providing this information on a separate channel to users. Ellis discusses transmitting the video "broadcasts" over communication path 150 and "game summary information, … and any other sports-related information" over communication path 152. Ex.1016 ¶41; *see* §IX.A.1. Ellis provides that in "some embodiments, this sports-related information is provided to user equipment 102 as a plurality of real-time data feeds. Ex.1016 ¶41. Thus, A POSA would have understood that Ellis discloses transmitting via at least one first/second chat/system event Internet communication channel between at least one first/second chat/system event socket of the at least one socket server and the first VCD of the first/second plurality of VCDs.

388. Ellis in view of Spivey discloses a socket specifically designated for chat information. Spivey utilizes topic queues to organize "data payloads" that "relate to a specific game between two NFL teams." Ex.1017 ¶¶51-52; *see* §IX.A.1, *supra*. The data payloads, "[w]hen the live event is a sporting event," include, "for example, a score, a play, …, and so forth." Ex.1017 ¶48. Topic queues may be "hierarchically related." *Id.* ¶52. This means that when the system looks at the text string associated with the data payload, the system "may place the data payload only in the topic queue exactly matching the topic label." *Id.* ¶104. For example, if there

were two topics "at the same hierarchal level" the data payloads placed in "'gamecenter.nfl.ravenssteelers.statistics' would not be placed in" another topic queue "gamecenter.nfl.ravenssteelers.plays." In sum, the statistics would be separate from the chat information. Thus, a POSA would have understood Spivey to disclose a first/second chat/system event socket corresponding to the first/second chat information related to the first/second live stream of digital content.

g. Dependent Claim 22

i. Limitation 22.0: "The system of claim 21, wherein:"

389. In my opinion, Ellis in view of Spivey discloses this limitation. *See* Claim 21. §X.B.1.f, *supra*.

ii. Limitations 22.1-22.5, 22.7: "in A), the plurality of media sources: provide a second copy of the first plurality of copies to a second viewer client device of the first plurality of viewer client devices via a third video Internet communication channel between the plurality of media sources and the second viewer client device of the first plurality of viewer client devices; and
provide a second copy of the second plurality of copies to a second viewer client device of the second plurality of viewer client devices via a fourth video Internet communication channel between the plurality of media sources and the second viewer client device of the second plurality of viewer client devices; and
in C), the at least one socket server:
transmits at least the first event information of the first event information to the second viewer

client device of the first plurality of viewer client devices via a third event information Internet communication channel between the at least one first event socket of the at least one socket server and the second viewer client device of the first plurality of viewer devices; transmits at least the second event information of the second event information to the second viewer client device of the second plurality of viewer client devices via a fourth event information Internet communication channel between the at least one second event socket of the at least one socket server and the second viewer client device of the second plurality of viewer devices; and"

390. In my opinion, Ellis in view of Spivey discloses these limitations. These limitations are substantially the same as limitations 20.1-20.6 except that limitations 22.5 and 22.7 contain a repeated phrase which does not change the meaning of the limitations. Ex.1003, Claim 20 ("[T]ransmits at least the second event information to …."), 22 ("[T]ransmits at least the second event information of the second event information to…"). Thus, a POSA would have understood that Ellis in view of Spivey discloses these limitations for the same reasons as stated above. §§X.B.1.e.i-iv, *supra*.

iii. **Limitations 22.6 and 22.8: "transmits and receives the first chat information regarding the first live sporting event video-based commentary included in the first live stream of digital content via at least one third chat/system event Internet communication channel between the at least one first chat/system event socket of the at least one socket server and the second**

viewer client device of the first plurality of viewer client devices; transmits and receives the second chat information regarding the second live sporting event video-based commentary included in the second live stream of digital content via at least one fourth chat/system event Internet communication channel between the at least one second chat/system event socket of the at least one socket server and the second viewer client device of the second plurality of viewer client devices."

391. In my opinion, Ellis in view of Spivey discloses these limitations. These limitations are substantially the same as limitations 21.1 and 21.2. Ex.1003, Claim 21. But these limitations further require that the first/second chat information is sent to a second VCD of the first/second plurality of VCDs. *Id.* Also, the slight difference in word choice, *e.g.*, "first live sporting event video-based commentary" versus "first live stream of digital content," does not change the meaning of the claim, as this claim depends on claim 21, and the first/second chat information is already defined therein.[12] Thus, Ellis in view of Spivey discloses these limitations for the same reasons as stated above. §X.B.1.f.i, *supra*.

h. Independent Claim 23

i. **Limitation 23.0: "A method for providing, to a first viewer client device, a first copy of a first**

[12] This is likely due to a copy and paste error, this time from a different patent, the '697. Ex.1007, Claim 22.

live stream of digital content relating to a first live sporting event, the method comprising:"

392. In my opinion, Ellis discloses this limitation. This limitation is substantially the same as limitation 1.0 and 19.0. Claim 23 is a method claim implementing the system of Claim 1 or 19. Thus, a POSA would have understood that Ellis discloses this limitation for the same reasons stated above. §§X.B.1.a.i, X.B.1.d.i, *supra*.

ii. **Limitation 23.1: "A) providing the first copy to the first viewer client device via a first video communication channel between at least one media source and the first viewer client device;"**

393. In my opinion, Ellis and Spivey disclose this limitation. This limitation is substantially the same as limitation 1.3 and 19.3. The claim language is slightly altered, but the claims contain the same limitations. Thus, a POSA would have understood that Ellis and Spivey disclose this limitation for the same reasons stated above. §§X.B.1.a.iv, X.B.1.d.iv, *supra*.

iii. **Limitation 23.2: "B) retrieving, via the Internet, first event information germane to the first live sporting event; and"**

394. In my opinion, Ellis in view of Spivey discloses this limitation. This limitation is substantially the same as limitation 1.5 and 19.5. The claim language is slightly altered, but the claims contain the same limitations. Thus, a POSA would have understood that Ellis in view of Spivey discloses this limitation for the same reasons stated above. §§X.B.1.a.v, X.B.1.d.v, *supra*.

iv. **Limitation 23.3: "C) transmitting the first event information to at least the first viewer client device via a first event information communication channel between at least one first event socket of at least one socket server and the first viewer client device, wherein the at least one first event socket corresponds to the first event information germane to the first live sporting event."**

395. In my opinion, Ellis in view of Spivey discloses this limitation. This limitation is substantially the same as limitation 1.8 and 19.8. The claim language is slightly altered, but the claims contain the same elements. Thus, a POSA would have understood that Ellis discloses this limitation for the same reasons stated above. §§X.B.1a.viii, X.B.1.d.viii, *supra*.

i. Dependent Claim 24

i. **Limitation 24.0: "The method of claim 23, further comprising:"**

396. In my opinion, Ellis in view of Spivey discloses this limitation. *See* Claim 23. §X.B.1.h, *supra*.

ii. **Limitation 24.1: "D) transmitting and receiving first chat information regarding the first live sporting event via at least one first chat/system event Internet communication channel between at least one first chat/system event socket of the at least one socket server and the first viewer client device, wherein the at least one first chat/system event socket corresponds to the first chat information."**

397. In my opinion, Ellis in view of Spivey discloses this limitation. This limitation is substantially the same as limitation 21.1. The claim language is slightly altered, but the claims contain the same limitations. Thus, a POSA would have understood that Ellis discloses this limitation for the same reasons stated above. §§X.B.1.f.i, *supra*.

j. Dependent Claim 25

i. **Limitation 25.0: "The method of claim 23, wherein B) comprises:"**

398. In my opinion, Ellis in view of Spivey discloses this limitation. *See* Claim 23. §X.B.1.h, *supra*.

ii. **Limitation 25.1-25.2: "B1) periodically updating the first event information; andB2) for each updating of the first event information, queueing an asynchronous message including the updated first event information for transmission to the at least one first event socket of the at least one socket server."**

399. In my opinion, Ellis in view of Spivey discloses this limitation. These limitations are substantially the same as limitations 9.2 and 9.3. The claim language is slightly altered, but the claims contain the same limitations. Thus, a POSA would have understood that Ellis in view of Spivey discloses this limitation for the same reasons stated above. §§X.B.1.c.iii-iv, *supra*.

k. Independent Claim 27

i. **Limitation 27.0: "A system for providing, to a first viewer client device, a first copy of a first**

live stream of digital content relating to a first live sporting event, the system comprising:"

400. In my opinion, Ellis discloses this limitation. *See* Limitation 1.0 and 19.0. §§X.B.1.a.i, X.B.1.d.i, *supra.* Ellis's figure 30 also discloses this limitation:

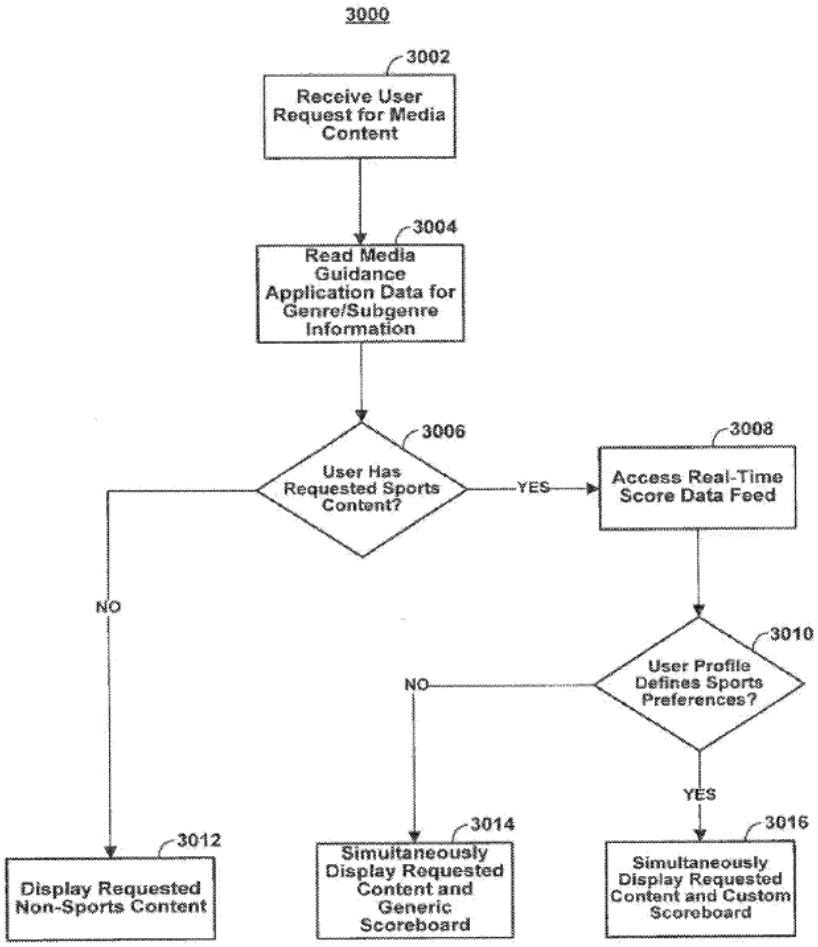

FIG. 30

Ex.1016, Fig. 30.

ii. **Limitation 27.1: "means for providing the first copy to the first viewer client device via a first video communication channel;"**

401. In my opinion, Ellis discloses this limitation. *See* Limitations 1.1-1.4 and 19.1-19.4; Ex.1016, Fig. 30. §§X.B.1.a.ii-iv, X.B.1.d.ii-iv, *supra*.

iii. **Limitations 27.2 and 27.3: "means for retrieving, via the Internet, first event information germane to a first live sporting event; and means for transmitting the first event information to at least the first viewer client device via a first event information communication channel that is different from the first video communication channel."**

402. In my opinion, Ellis in view of Spivey discloses these limitations. *See* Limitations 1.5-1.8 and 19.5-19.8. §§X.B.1.a.v-viii, *supra*. Ellis's figures 30 and 32 and Spivey's Figures 12 and 13 also discloses these limitations:

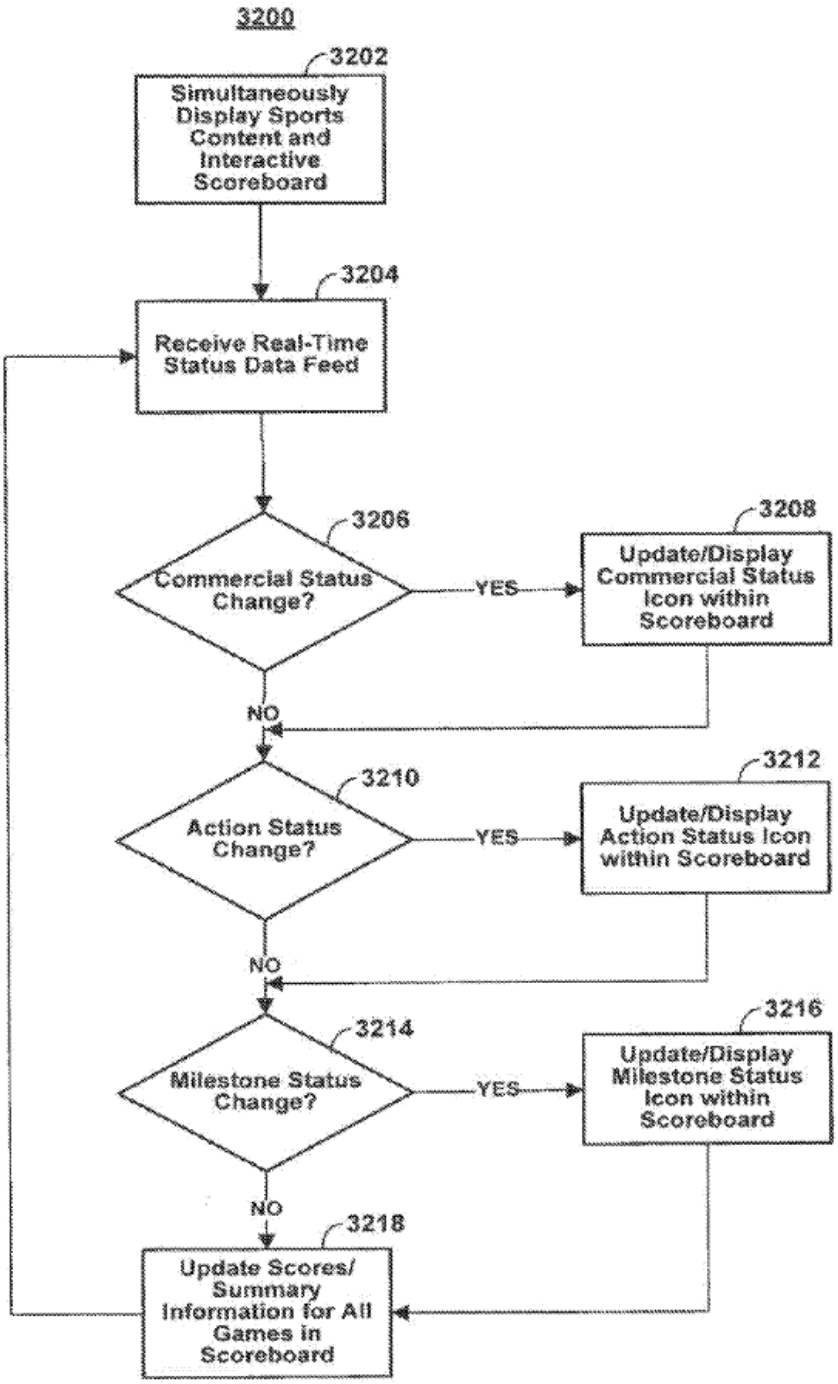

Ex.1016, Fig. 30, 32; Ex.1017, Figs. 12-13.

l. Dependent Claim 28

i. Limitation 28.0: "The system of claim 27, further comprising:"

403. In my opinion, Ellis in view of Spivey discloses this limitation. *See* Claim 27. §X.B.1.k, *supra*.

ii. **Limitation 28.1: "means for transmitting and receiving first chat information regarding the first live sporting event via at least one first chat/system event Internet communication channel that is different from the first video communication channel and the first event information communication channel."**

404. In my opinion, Ellis in view of Spivey discloses these limitations. *See* Claim 21. §X.B.1.f, *supra*. Ellis's figures 30 and 32 and Spivey's figures 12 and 13 also disclose this limitation. Ex.1016, Figs. 30, 32; Ex.1017, Figs. 12-13.

m. Dependent Claim 29

i. **Limitation 29.0: "The system of claim 27, wherein the means for retrieving includes means for updating the first event information and queueing an asynchronous message including the updated first event information for transmission on the first event information communication channel."**

405. In my opinion, Ellis in view of Spivey discloses these limitations. *See* Claims 9, 25, 27. §§X.B.1.c, X.B.1.j, X.B.1.k, *supra.*

n. Dependent Claim 30

i. **Limitation 30.0: "The system of claim 27, wherein the means for providing the first copy to the first viewer client device via a first video communication channel comprises:"**

406. In my opinion, Ellis in view of Spivey discloses these limitations. *See* Claim 27. §X.B.1.k, *supra.* This limitation attempts to claim the basics of Internet streaming and content delivery. As is well known, the Internet has been used for content delivery through HTTP since 1990, and for commercial purposes since 1995. Content Delivery Networks (CDNs) quickly followed. *See* Ex.1023. In my opinion, Ellis, in view of Spivey, builds on this well-known series of concepts.

ii. **Limitation 30.1: "an HTTP live streaming (HLS) mother server to receive a first HLS file suite representing the first live stream of digital content; and"**

407. In my opinion, Ellis discloses this limitation. The '687 explains that an HLS mother server is a generic "computer server" comprising known components such as "processors, memory, and … communication interfaces." Ex.1003, 19:17-23; *see id.* 27:40-49. This HLS mother server is simply capable of receiving and transmitting an HLS file suite, *i.e.*, a "broadcaster's live stream." *Id.* 27:40-49, 28:15-33. HLS is a data transmission format adopted in 2009 to provide video feeds over the internet. Ex.1028, 1.

408. Ellis teaches streaming video from content source 130, *e.g.*, an "Internet or network media/web server" to a client device, over the internet. Ex.1016 ¶¶40, 74 ("For IPTV, tuned content may include content to be delivered on a particular network address … on which an IP socket is currently joined."). Thus, a POSA

would have understood that Ellis, filed in 2014, teaches using all forms of standard internet transmission protocols, including HLS streaming.

iii. **Limitation 30.2: "a plurality of HLS child servers, communicatively coupled to the HLS mother server and an HLS content delivery network (HLS CDN), to provide the first copy to the first viewer client device via the first video communication channel between the HLS CDN and the first viewer client device, wherein the first copy is based on the first HLS file suite received by the HLS mother server."**

409. In my opinion, Ellis discloses this limitation. The '687 explains that Figure 8 depicts "HLS server architecture:"

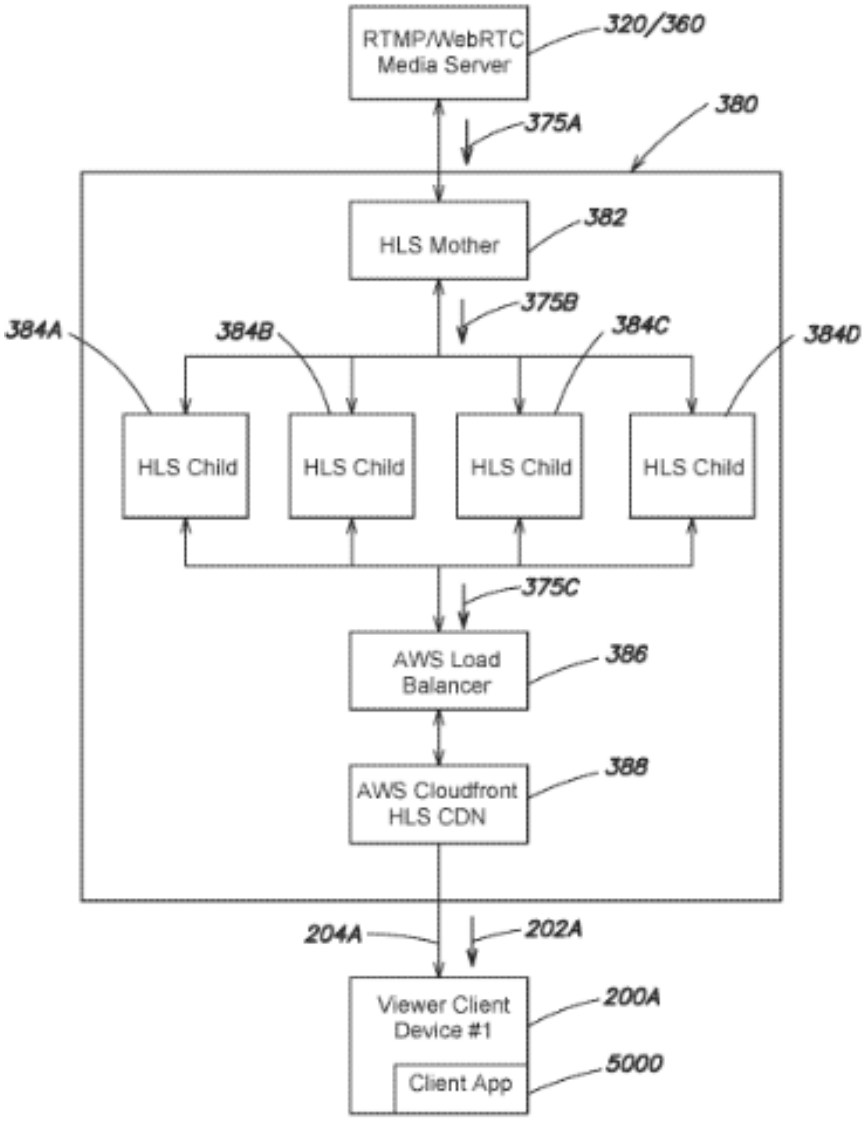

FIG. 8

Ex.1003, Fig. 8. As shown in figure 8, HLS child servers receive the video feed from a mother server. *Id.* An HLS child server is a generic server capable of streaming an HLS file suite. *See id.*, 19:17-23, 27:40-49. After receiving the HLS file, the child servers "pass on copies 375C … to one or more geographically-distributed servers" that are "serving as an HLS CDN." *Id.,* 39:60-40:10. The '687

recognizes that this HLS CDN is a "conventional (e.g. global) CDN" that then "serves" "streams … to multiple viewers." *Id.*

410. Ellis discloses a generic server and system that streams copies of an HLS file suite to user devices over a communication channel between the CDN and user device. §§X.B.1.d, X.B.1.n.ii, *supra.* Moreover, Ellis discloses a content source that provides video feeds utilizing "multiple systems at multiple facilities," *e.g.*, child servers. Ex.1016 ¶47. Further, Ellis discloses an "entire media system or network." *Id.* ¶77. Necessarily, such a system would utilize a conventional CDN, as recognized in the '687. Thus, a POSA would have understood Ellis discloses this limitation.

2. '687 Ground 1B: Claims 2-7 Are Obvious Over Ellis in View of Spivey and Herzog

411. For the reasons stated in Section IX.B, above, it is my opinion that a POSA would have been motivated to combine the teachings of Ellis, Spivey, and Herzog to arrive at the claimed invention with a reasonable expectation of success.

a. Dependent Claim 2

i. Limitation 2.0: "The system of claim 1, wherein:"

412. In my opinion, Ellis discloses this limitation. *See* Claim 1. §X.B.1.a, *supra*.

ii. Limitation 2.1: "the first live stream of digital content and the second live stream of digital

content both relate to the first live sporting event;"

413. In my opinion, Ellis in view of Herzog discloses this limitation. The '687 explains that the media sources can provide two different live streams of digital content related to "the same live event." Ex.1003, 23:17-28. Herzog discloses a broadcasting system where in one embodiment, "four video/audio streams" are provided from the same live sporting event, e.g., an "Indy Race." Ex.1015 ¶46. Herzog explains that "any number of sources may be available" from the same event. Ex.1015 ¶46. Examples of this video include "live videos of four of the drivers inside their respective vehicles" or may be "multiple video/audio streams of race cars and drivers, as they are imaged at different locations on the race track." *Id.* ¶¶45, 80. User devices can "initiate[] a video request of one or more channels of video/audio for viewing a live event on the device display." *Id.* ¶70

414. Multiple users selecting the same stream of video would create a "plurality of viewers" of that live stream of digital content and all would receive "their own copy" of the live stream. That is because, to put it bluntly, that is how the internet works. Users receive individual copies of published content. The users watching the same video feeds would all be receiving individual copies of the same stream, over their individual internet connection. The live stream is then "published" to the user device via "content delivery network 47" using "an HTTPS Live

Streaming (HLS)-based media streaming communications protocol." Ex.1015 ¶¶51, 55. Thus, Ellis in view of Herzog discloses this limitation.

iii. **Limitation 2.2: "in C), the at least one socket server further transmits the first event information for the first live sporting event to at least the first viewer client device of the second plurality of viewer client devices via a second event information Internet communication channel between the at least one first event socket of the at least one socket server and the first viewer client device of the second plurality of viewer devices."**

415. In my opinion, Ellis in view of Spivey and Herzog discloses this limitation. Spivey discloses the at least one socket server, transmitting first event information for the first live sporting event via an event information Internet communication channel between the at least one first event socket of the at least one socket server and the first VCD of a plurality of VCDs. *See* §X.B.1.a.viii, *supra*. Here, the claim requires providing the same event information, over a separate connection, between the first event information socket to another user, who is watching a different live stream of the same live event, such as one of the multiple videos streamed/broadcasted from Herzog's "Indy Race." Ex.1003, Claim 2.

416. Ellis in view of Herzog discloses multiple groups watching different live streams of digital content of the same game. §X.B.2.a.ii, *supra*. Further, Spivey discloses transmitting "data from topic queues … to the subscribers of the topics corresponding to those topic queues" on individual internet connections. Ex.1017

¶46; *see* §X.B.1.a.viii, *supra*. Thus, a first viewer from the second plurality, *i.e.*, a viewer watching video stream two from the Indy Race, would receive the race updates, e.g., car position, acceleration, over a separate internet connection, between her device to the first event socket, *i.e.*, the topic queue.

b. Dependent Claim 3

i. **Limitation 3.0: "The system of claim 2, wherein:"**

417. In my opinion, Ellis in view of Spivey and Herzog teaches this limitation. *See* Claim 2. §X.B.2.a, *supra*.

ii. **Limitations 3.1 and 3.2: "none of the first event information is included in the first copy of the first plurality of copies of the first live stream of digital content provided to the first viewer client device of the first plurality of viewer client devices via the first video Internet communication channel; and none of the first event information is included in the first copy of the second plurality of copies of the second live stream of digital content provided to the first viewer client device of the second plurality of viewer client devices via the second video Internet communication channel."**

418. In my opinion, Ellis discloses these limitations. The '687 describes first event information as, for example, "team information," "score information," "player information," and "venue information." Ex.1003, 4:50-5:15. Further the '687 requires that this event information is provided via an "'event information' Internet communication channel" that is different than the channel on which the live stream

of digital content is distributed, *i.e.*, the "'video' Internet communication channel." *Id.*, 5:38-53.

419. As explained in Claims 1 and 2, Ellis in view of Herzog discloses that a "content source" streams "broadcast programming," *i.e.*, at least two different video streams of the same live event, to multiple different users over individual "communication path[s] 150." Ex.1016 ¶¶39-40; *see* §§X.B.1.a, X.B.2.a, *supra*. While the user is receiving video content over communication path 150, Ellis is providing "real-time sports scores and game summary information" to those user equipment devices from SCS over a separate individual communication path 152:

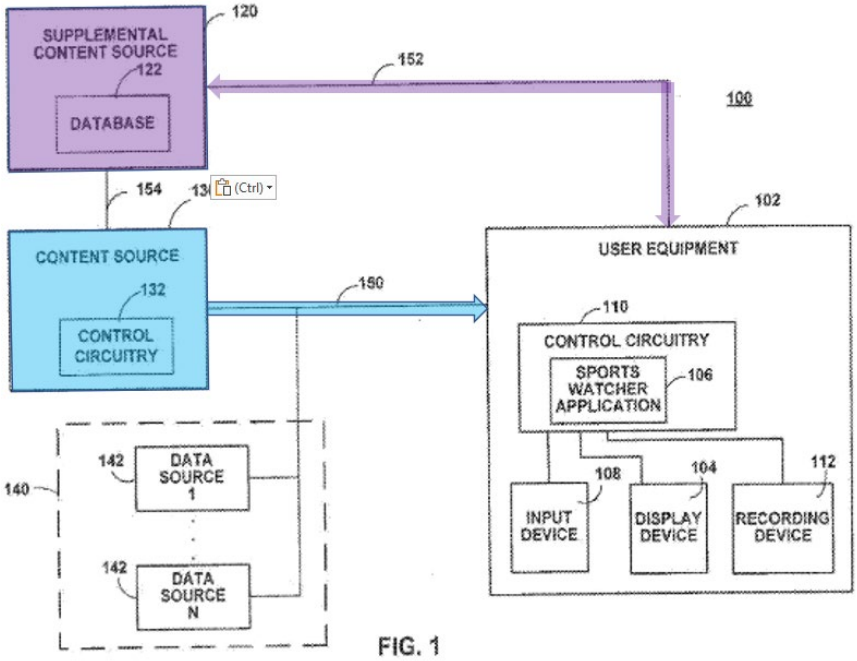

FIG. 1

Id. ¶¶39-41, Fig. 1. In other words, the real-time sport scores, game summary information, and more, *i.e.*, event information, is provided via communication path 152 and not with a copy of the video content, 150. *Id*. Thus, as explained and shown,

a POSA would have understood Ellis to disclose a system that does not provide event information in the first copies of live streams of digital content provided via video internet communication channels.

c. Dependent Claim 4

i. **Limitation 4.0: "The system of claim 2, wherein:"**

420. In my opinion, Ellis in view of Spivey and Herzog teaches this limitation. *See* Claim 2. §X.B.2.a, *supra*.

ii. **Limitation 4.1: "in A), the plurality of media sources:"**

421. In my opinion, Ellis teaches this limitation. *See* Limitation 1.1. §X.B.1.a.ii, *supra.*

iii. **Limitations 4.2 and 4.3: "provide a second copy of the first plurality of copies to a second viewer client device of the first plurality of viewer client devices via a third video Internet communication channel between the plurality of media sources and the second viewer client device of the first plurality of viewer client devices; and provide a second copy of the second plurality of copies to a second viewer client device of the second plurality of viewer client devices via a fourth video Internet communication channel between the plurality of media sources and the second viewer client device of the second plurality of viewer client devices; and"**

422. In my opinion, Ellis in view of Spivey and Herzog discloses these limitations. These limitations are substantially the same as limitations 1.3 and 1.4.

See §X.B.1.a.iv, *supra*. Specifically, these limitations add providing a second copy, *i.e.*, another copy, of the first/second plurality of copies to a second VCD of the first/second VCDs via a third/fourth connection:

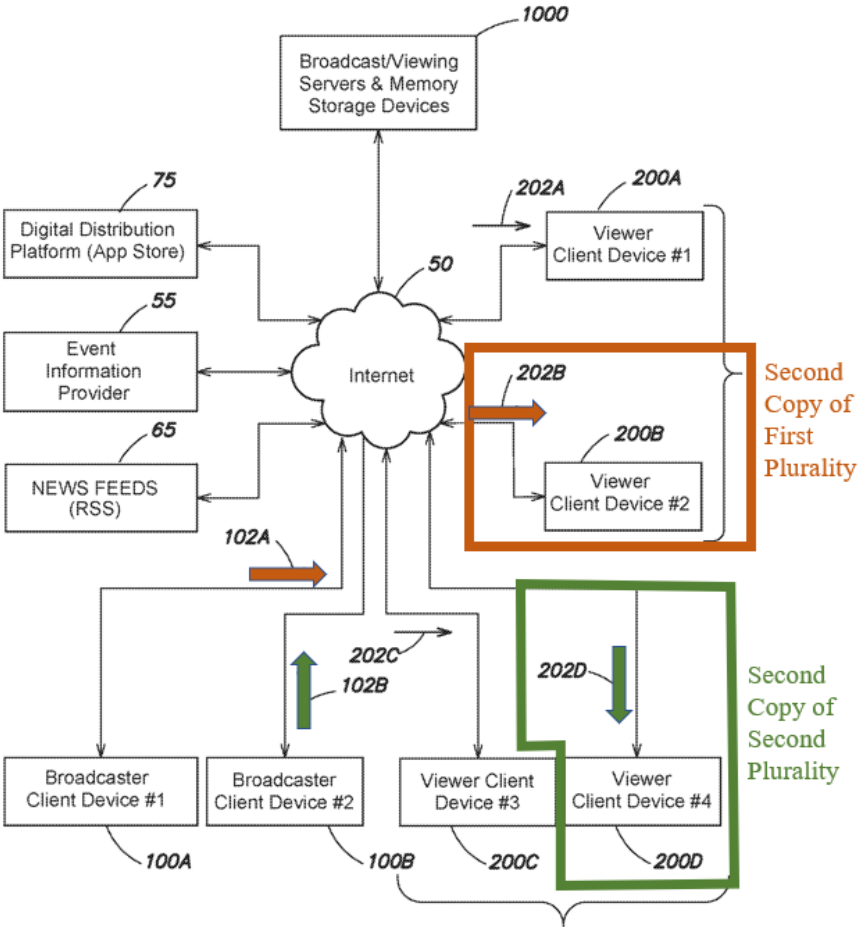

Ex.1003, 15:22-33, Fig. 1A.

423. Ellis discloses these limitations for the same reasons as discussed in section X.B.1.a.iv, *supra.* Specifically, Ellis in view of Spivey and Herzog discloses providing individual copies, to multiple different users, of multiple different live streams of digital content, related to the same game, over individual "video" internet connections. §§X.A.2.a.v, X.B.1.a.iv, *supra*.

iv. **Limitation 4.4: "in C), the at least one socket server:"**

424. In my opinion, Ellis in view of Spivey and Herzog teaches this limitation. *See* Limitation 1.6. §X.B.1.a.vi, *supra.*

v. **Limitations 4.5 and 4.6: "transmits at least the first event information to the second viewer client device of the first plurality of viewer client devices via a third event information Internet communication channel between the at least one first event socket of the at least one socket server and the second viewer client device of the first plurality of viewer devices; and transmits at least the first event information to the second viewer client device of the second plurality of viewer client devices via a fourth event information Internet communication channel between the at least one first event socket of the at least one socket server and the second viewer client device of the second plurality of viewer devices."**

425. In my opinion, Ellis in view of Spivey and Herzog discloses these limitations. These limitations are substantially the same as limitations 1.8 and 2.2. §§X.B.1.a.viii, X.B.2.a.iii. These limitations simply add transmitting the first event information, to a second VCD, of the same first/second plurality of VCDs.

426. Both Ellis and Spivey further disclose transmitting the first event information to the second VCD of the previously mentioned first/second plurality of VCDs via a third (separate) channel. For example, in Spivey, the MQSD "may push data from topic queues … to the subscribers of the topics corresponding to those

topic queues." Ex.1017 ¶46. In Ellis, SCS may be configured "to provide real-time sports scores and game summary information, … to user equipment 102." Ex.1016 ¶41; *see id.* ¶39 ("Any suitable number of users may have one or more user equipment … 102."). Thus, a POSA would have understood that Ellis in view of Spivey and Herzog discloses these limitations because both disclose transmitting the first event information to multiple VCDs of the first/second plurality of VCDs.

d. Dependent Claim 5

i. Limitation 5.0: "The system of claim 2, wherein in C), the at least one socket server further:"

427. In my opinion, Ellis in view of Spivey and Herzog discloses this limitation. *See* Claim 2, §X.B.2.a, *supra*.

ii. Limitations 5.1 and 5.2: "transmits and receives first chat information regarding the first live stream of digital content via at least one first chat/system event Internet communication channel between at least one first chat/system event socket of the at least one socket server and the first viewer client device of the first plurality of viewer client devices, wherein the at least one first chat/system event socket corresponds to the first chat information; and transmits and receives second chat information regarding the second live stream of digital content via at least one second chat/system event Internet communication channel between at least one second chat/system event socket of the at least one socket server and the first viewer client device of the second plurality of viewer client devices, wherein the at least one

second chat/system event socket corresponds to the second chat information."

428. In my opinion, Ellis in view of Spivey and Herzog discloses these limitations. Ellis in view of Spivey and Herzog discloses transmitting information via individual communication channels between a socket and a first VCD of a first/second plurality of VCDs who are watching the same event. §§X.B.1.a.viii, X.B.2.a.iii, *supra*. The '687 explains that this chat/system event communication channel may be any generic internet communication channel. Ex.1003, 5:38-45. These limitations only further require that the system "transmits and receives" first/second "chat information regarding" the first/second "live stream of digital content" over another separate, individual connection between a first/second "chat/system event socket" and a first/second VCD:

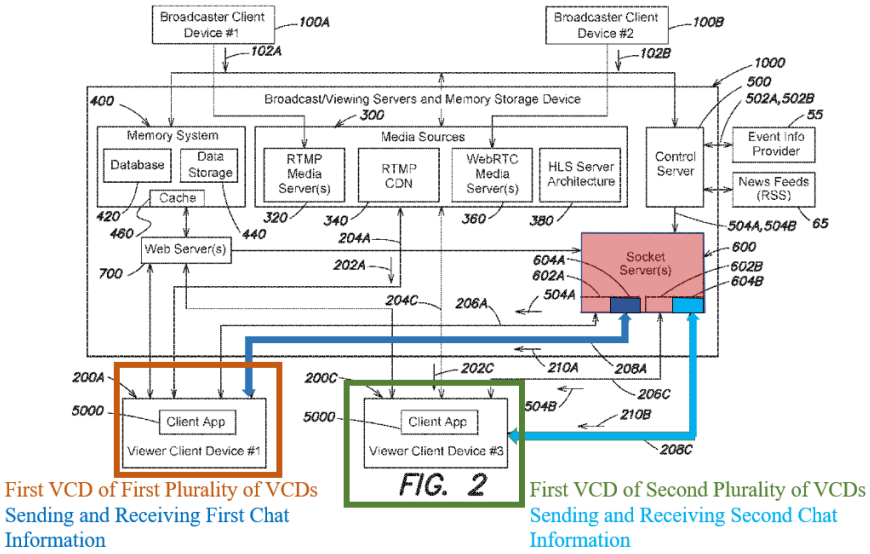

Ex.1003, 22:17-48, Claim 5, Fig. 2. In sum, these limitations require that chat information is transmitted and received over a third communication channel from another socket that is dedicated for chat/system information.

429. The ’687 describes chat information as communications “between a given broadcaster … and corresponding viewers … of chat messages.” Ex.1003, 20:22-27. Further, “viewers of the same live event may” view different video feeds of the same live event and “participate in different chat information exchanges … and all share the same event information in a synchronized manner.” *Id.,* 23:17-28. Additionally, the ’687’s explanation of chat/system event sockets indicate that they are the same as the other sockets, *i.e.*, a communication endpoint on a server that is uniquely addressable, *e.g.*, by using an identifier (StreamID) that may be contained, *e.g.*, in a URL. Ex.1003, 20:55-21:4, 21:63-22:16); *see* Ex.1003, 23:55-24:15. The only difference is that these sockets store and send chat messages, not “event data.” *See* Ex.1003, 23:55-24:15.

430. Ellis discloses chat information because users “may also leave feedback regarding the commentary that other users in the media system may view when they access the same commentary.” Ex.1016 ¶132. A POSA would have understood that Ellis discloses a system that transmits and receives first/second chat information regarding the first/second live stream of digital content. *See also*

Ex.1016 ¶126 ("To create and send a message (e.g., instant message or email message), the user may select send message option.").

431. Ellis also discloses providing this information on a separate channel to users. Ellis discusses transmitting the video "broadcasts" over communication path 150 and "game summary information, … and any other sports-related information" over communication path 152. Ex.1016 ¶41; *see* §X.B.2.b.ii. Ellis provides that in "some embodiments, this sports-related information is provided to user equipment 102 as a plurality of real-time data feeds. Ex.1016 ¶41. Thus, A POSA would have understood that Ellis discloses transmitting via at least one first/second chat/system event Internet communication channel between at least one first/second chat/system event socket of the at least one socket server and the first VCD of the first/second plurality of VCDs.

432. Ellis in view Spivey and Herzog discloses a socket specifically designated for chat information. Spivey utilizes topic queues to organize "data payloads" that "relate to a specific game between two NFL teams." Ex.1017 ¶¶51-52; *see* X.B.1.a.viii, *supra*. The data payloads, "[w]hen the live event is a sporting event," include, "for example, a score, a play, …, and so forth." Ex.1017 ¶48. Topic queues may be "hierarchically related." *Id.* ¶52. This means that when the system looks at the text string associated with the data payload, the system "may place the data payload only in the topic queue exactly matching the topic label." *Id.* ¶104.

For example, if there were two topics "at the same hierarchal level" the data payloads placed in "'gamecenter.nfl.ravenssteelers.statistics' would not be placed in" another topic queue "gamecenter.nfl.ravenssteelers.plays." In sum, the statistics would be separate from the chat information. Thus, a POSA would have understood Spivey to disclose a first/second chat/system event socket corresponding to the first/second chat information.

e. Dependent Claim 6

i. Limitation 6.0: "The system of claim 5, wherein at least one of the first chat information and the second chat information comprises at least one of:"

433. In my opinion, Ellis in view of Spivey and Herzog discloses this limitation. *See* Claim 5, §X.B.2.d, *supra*.

ii. Limitations 6.1, 6.2, and 6.3: "advertising or branding relating to a sponsor of at least one of the first live stream of digital content and the second live stream of digital content; at least one digital gift; and at least one sponsorship."

434. In my opinion, Ellis in view Spivey and Herzog discloses these limitations. Claim 6 of the '687 requires that the chat information includes at least one of advertising relating to a first sponsor, a digital gift, and a sponsorship. Ex.1003, Claim 6. The '687 explains that advertising or branding may include "screen animations, customized displays, or screen backgrounds, and/or other special effects graphics." *Id.,* 6:6-9. The advertising or branding may come from

"sponsors of a broadcaster, sponsors of an event about which a broadcaster is providing commentary, [or] participants in the event itself, etc." *Id*., 6:39-43. Further, digital gifts may include "one or more viewers" providing "other viewers" with "digital beers, various digital concession stand items, ticker tapes, penalty flags, etc." that is "communicated between client devices … via a chat/system event Internet communication channel." *Id*., 6:50-55.

435. Ellis discloses a system that "provides a number of opportunities for targeted advertising." Ex.1016 ¶140. The system discloses opportunities for advertisements "targeted based on ... user profile information." *Id.* As would be obvious in such a system that provides live broadcasts of sports games, the content would contain general sponsorship opportunities as well, to all audience members. Moreover, Ellis describes displaying advertisements, such as to "purchase Yankees tickets," on "any of the display screens shown." *Id.* These interactive displays are separate from the broadcast video feed and would come from the SCS. *See* §X.B.1.a.viii, *supra*. Further, Ellis discloses a wagering system that "may enhance marketing and advertising efforts" by crediting users with "$100 when they sign up for a wagering account." Ex.1016 ¶119. Thus, a POSA would have understood Ellis to disclose a system for providing advertising, branding, sponsorship, and digital gifts that are separate from the video broadcast.

436. Further, as discussed in Claim 5, Spivey discloses providing a topic queue, *i.e.*, socket, for chat information and other game information that is not included in the real-time statistics topic queue. §X.B.2.d.ii, *supra*. Thus, a POSA would have understood that Ellis in view of Spivey and Herzog discloses providing at least one of Ellis's advertising, branding, sponsorships, or digital gifts included in the first/second chat information. *Id*.

f. Dependent Claim 7

i. Limitation 7.0: "The system of claim 5, wherein:"

437. In my opinion, Ellis in view of Spivey and Herzog discloses this limitation. *See* Claim 5. §X.B.2.d, *supra*.

ii. Limitation 7.1: "in A), the plurality of media sources:"

438. In my opinion, Ellis discloses this limitation. *See* Limitation 1.1. §X.B.1.a.ii, *supra.*

iii. Limitations 7.2 and 7.3: "provide a second copy of the first plurality of copies to a second viewer client device of the first plurality of viewer client devices via a third video Internet communication channel between the plurality of media sources and the second viewer client device of the first plurality of viewer client devices; and provide a second copy of the second plurality of copies to a second viewer client device of the second plurality of viewer client devices via a fourth video Internet communication channel between the plurality of media sources and the second viewer client

device of the second plurality of viewer client devices; and"

439. In my opinion, Ellis in view of Herzog discloses this limitation. *See* Limitations 4.2 and 4.3. §X.B.2.c.iii, *supra*.

iv. **Limitation 7.4: "in C), the at least one socket server:"**

440. In my opinion, Ellis in view of Spivey discloses this limitation. *See* Limitation 1.6. §X.B.1.a.vi, *supra.*

v. **Limitations 7.5 and 7.7: "transmits at least the first event information to the second viewer client device of the first plurality of viewer client devices via a third event information Internet communication channel between the at least one first event socket of the at least one socket server and the second viewer client device of the first plurality of viewer devices; transmits at least the first event information to the second viewer client device of the second plurality of viewer client devices via a fourth event information Internet communication channel between the at least one first event socket of the at least one socket server and the second viewer client device of the second plurality of viewer devices; and"**

441. In my opinion, Ellis in view of Spivey and Herzog discloses these limitations. *See* Limitations 4.5 and 4.6. §X.B.2.c.v, *supra*.

vi. **Limitations 7.6 and 7.8: "transmits and receives the first chat information regarding the first live stream of digital content via at least one third chat/system event Internet communication channel between the at least one first chat/system event socket of the at least one**

socket server and the second viewer client device of the first plurality of viewer client devices; transmits and receives the second chat information regarding the second live stream of digital content via at least one fourth chat/system event Internet communication channel between the at least one second chat/system event socket of the at least one socket server and the second viewer client device of the second plurality of viewer client devices."

442. In my opinion, Ellis in view of Spivey and Herzog discloses these limitations. *See* Limitations 5.1 and 5.2. §X.B.2.d.ii, *supra*.

3. '687 Ground 2: Claims 1-9, 19-25, 27-30 Are Obvious Over Herzog in View of Spivey and Ellis

443. For the reasons stated in Section IX.E, above, it is my opinion that a POSA would have been motivated to combine the teachings of Herzog, Spivey, and Ellis to arrive at the claimed invention with a reasonable expectation of success.

a. Independent Claim 1

i. **Limitation 1.0: "A system for providing, to a first plurality of viewer client devices, a first plurality of copies of a first live stream of digital content relating to a first live sporting event, and for providing, to a second plurality of viewer client devices, a second plurality of copies of a second live stream of digital content relating to the first live sporting event or a second live sporting event, the system comprising:"**

444. In my opinion, Herzog and Ellis disclose this limitation. Herzog provides "live video and audio data" to user devices over a "communication

network." *See* Ex.1015, Abstract. Herzog's primary embodiment includes providing "multiple video/audio streams of race cars and drivers, as they are imaged at different locations on the race track:"

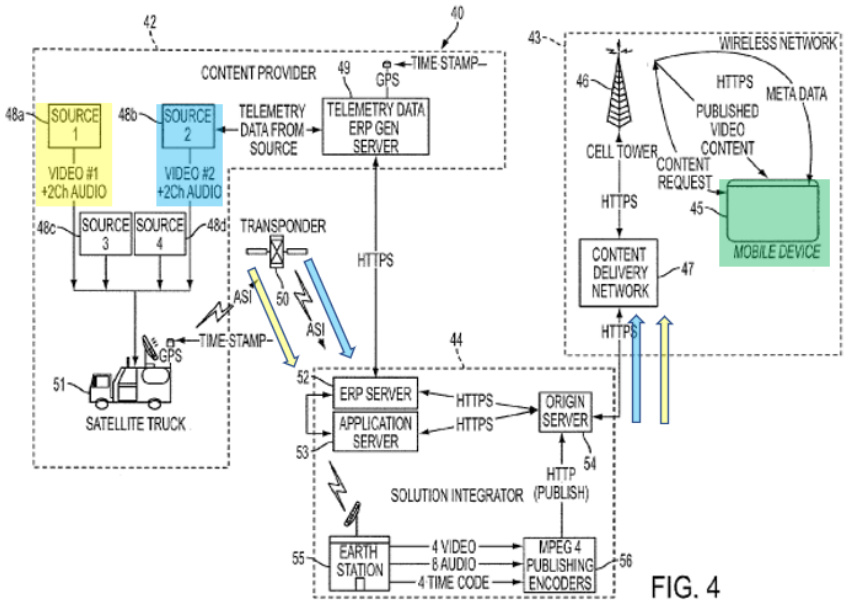

FIG. 4

Ex.1015 ¶45, Fig 4. The above system focuses on one live event, an Indy Car Race. *Id.* ¶45. The system makes these video feeds available to "mobile stations" and other "similar users." *Id.* ¶19. Each user can then request video from "one or more channels of video/audio for viewing a live event." *Id.* ¶70. The user then "receives both the video/audio stream in an HTTPS Live Streaming (HLS)-based media streaming communications protocol." *Id.* ¶51. Thus, Herzog provides a system where multiple different users can select the same, or different, live stream of digital content that relates to a live sporting event.

445. Further, Ellis discloses expanding on Herzog's system by providing multiple live streams of digital content that is of two different live sporting events. Ex.1016. ¶¶62-63, Fig. 2B. Thus, Herzog and Ellis disclose this limitation.

ii. **Limitation 1.1: "a plurality of media sources to:"**

446. In my opinion, Herzog discloses this limitation. Herzog discloses multiple MPEG 4 Publishing Encoders ("Encoders") as a plurality of media sources. Ex.1015 ¶48. Just like in the '687 Patent, these encoders receive all of the video and audio data from the live event, such as the Indy Car Race. *Id.* ¶¶46 (noting that any form of communication technologies may be used to send the video/audio data to MPEG Publishing Encoders), 49. The Encoders can "encode" the video and audio data and then the "encoded video is then published to the content delivery network 47 (for example) via IP utilizing [] HLS." *Id.* ¶49, 55. Moreover, as explained below, Herzog's content sources perform the same functions as the media sources as recited in limitations 1.2-1.4. Thus, Herzog discloses this limitation.

iii. **Limitation 1.2: "receive the first live stream of digital content and the second live stream of digital content;"**

447. In my opinion, Herzog discloses this limitation. The Encoders receive all of the video and audio data from the live event, such as the Indy Car Race. Ex.1015 ¶49. Herzog discloses that the audio and video data can be provided to the Encoders using "communications technologies for communicating multiple video

and audio streams." *Id.* ¶46. Thus, Herzog discloses content sources that receive multiple live streams of content and distribute that content to user equipment.

iv. **Limitations 1.3 and 1.4: "provide a first copy of the first plurality of copies to a first viewer client device of the first plurality of viewer client devices via a first video Internet communication channel between the plurality of media sources and the first viewer client device of the first plurality of viewer client devices; and provide a first copy of the second plurality of copies to a first viewer client device of the second plurality of viewer client devices via a second video Internet communication channel between the plurality of media sources and the first viewer client device of the second plurality of viewer client devices;"**

448. In my opinion, Herzog discloses these limitations.

(A) First VCD of the first/second plurality of VCDs

449. Herzog discloses providing multiple different users with the option to select any of the available video feeds. Ex.1015 ¶70. As would be obvious in a content distribution scheme such as Herzog that provides at least four different video streams, two or more users would select a first stream to view, and two or more different users would select a second stream to view, *e.g.*, the view from their favorite driver's car. *Id*. ¶¶46, 70. This would create a first and second plurality of VCDs where each plurality contains a first VCD. Thus, Herzog discloses multiple first users of multiple different pluralities of VCDs.

(B) First copy of first/second plurality of copies

450. Herzog provides the selected video stream to each user individually via "an HTTPS Live Streaming (HLS)-based media streaming communications protocol." Ex.1015 ¶51. Thus, a POSA would have understood that each user device receives their own copy of the video stream. This would create a plurality of copies being distributed, where the first copy is sent to the first user, and so on and so forth. Thus, each user would receive an individual copy of the live stream of digital content.

(C) Providing copies via a first/second video Internet communication channel

451. Herzog discloses providing individual copies of multiple different live streams to multiple groups of client devices. §§X.B.3.a.iv(A)-(B), *supra*. Herzog further discloses providing video content over a video Internet communication channel via HTTPS Live Streaming, i.e., an internet connection. Ex.1015 ¶51. Thus, Herzog discloses that each user receives an individual copy from the Encoders over a video internet communication path that is unique to each user device. *Id.* ¶¶2 (noting that user devices "are used mainly for viewing published content from the Internet, such as video."), 51.

v. **Limitation 1.5: "a control server to periodically retrieve, via the Internet, first event information germane to the first live sporting event; and"**

452. In my opinion, Herzog and Ellis both disclose this limitation. Herzog's ERP Server connects to the ERP Gen Server over the internet:

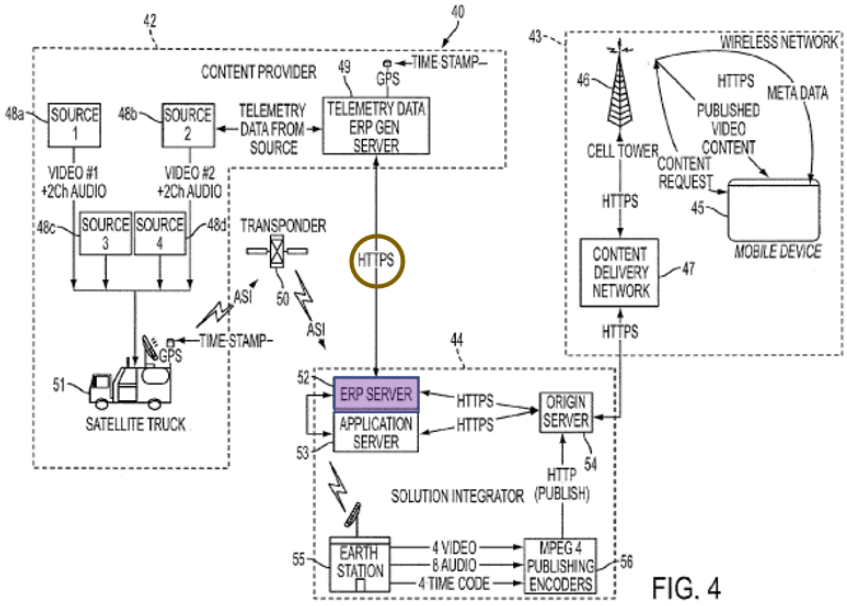

FIG. 4

Ex.1015 ¶¶45, 47, 50, Fig. 4. The ERP Server is a generic server that retrieves meta-data from the ERP Gen Server. *Id.* ¶¶16, 47, 50. It contains the same components as the control server: a processor, memory device, and communication interfaces. *Id.*, ¶13, 85-86, Fig. 8. The ERP Server "acts as an intermediary between the ERP generator server and the origin server." *Id.* ¶50. The meta-data retrieved includes event information germane to the sporting event such as "the status of each car and driver in the race" and may include "lap number, car speed and acceleration" but there may be as many as "50 different parameters that are available." *Id.* ¶45. The ERP Server retrieves this information over the internet because it retrieves the information in HTTPS format, an internet communication protocol. *Id.* ¶¶17, 50.

453. Additionally, Ellis's SCS can be "any suitable content source configured to provide real-time sports scores and game summary information" including a "content manager, content aggregator, or intermediate content provider." Ex.1016 ¶¶42, 142. The SCS periodically retrieves event information germane to all live sporting events, *e.g.*, score information because the SCS may "provide real-time sports scores and game summary information, … spread and wagering data, and any other sports-related information to user equipment 102." *Id.* ¶41; *see id.* ¶¶72, 117. A POSA would have understood that this information is retrieved via the internet because that is how real-time data was transferred to users at the time of Herzog, Spivey, and Ellis—including score updates and wagering information. *Id*. ¶¶42, 142.

454. While a periodic time interval, e.g., every .1 seconds, is not mentioned in Herzog or Ellis, a POSA would have understood that any system that provides real-time sports statistics, such as Herzog, would necessarily update the statistics on a periodic basis. Alternatively, it would be an obvious design choice to use a periodic update to limit queries to the system and load on the components. Thus, a POSA would have understood that Herzog and Spivey both disclose this limitation.

vi. **Limitation 1.6: "at least one socket server communicatively coupled to the control server to:"**

455. In my opinion, Herzog in view of Ellis and Spivey discloses this limitation. Herzog in view of Ellis and Spivey discloses a socket server communicatively coupled to the control server (which, as discussed above, is disclosed by Herzog's ERP Server).

456. Herzog discloses providing event information over a separate connection to user equipment. Ex.1015 ¶¶48-52, 67, Figs. 4, 6. That process includes the ERP Server transmitting data to the Origin Server:

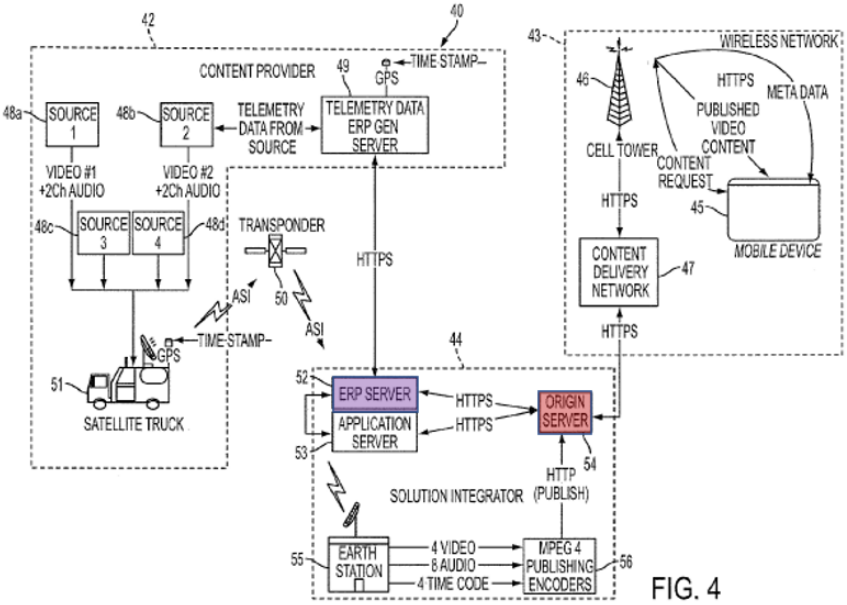

FIG. 4

Id. ¶¶50-51, 83, Fig. 4. But in a system of Spivey combined with Ellis, as noted in Limitation 1.0, a POSA would look to Spivey to add additional backend architecture to organize the meta-data from multiple events and reduce latency in the real-time data delivery system. A POSA would do this by incorporating Spivey's MQSD into Herzog's Origin Server.

457. Like the '687's socket server, Spivey's MQSD is a generic server that contains processors, memory, and communication components. Ex.1017 ¶¶35, 53, Figs. 3, 4. Moreover, Spivey's MQSD carries out the same purpose as the '687's socket server. The MQSD "receive[s]" and "process[es] live data to provide live data" to "the subscribed connected client devices substantially simultaneously." *Id.* ¶36; *see id.* ¶¶45 ("[MQS] device 310 may be a representative example of message queue server 120"), 54 (describing that MQSD is "substantially similar" to "MQS device 310"), 96. To accomplish this, the MQSD receives live event data from the LDSD, which just "receive[d] live data:"

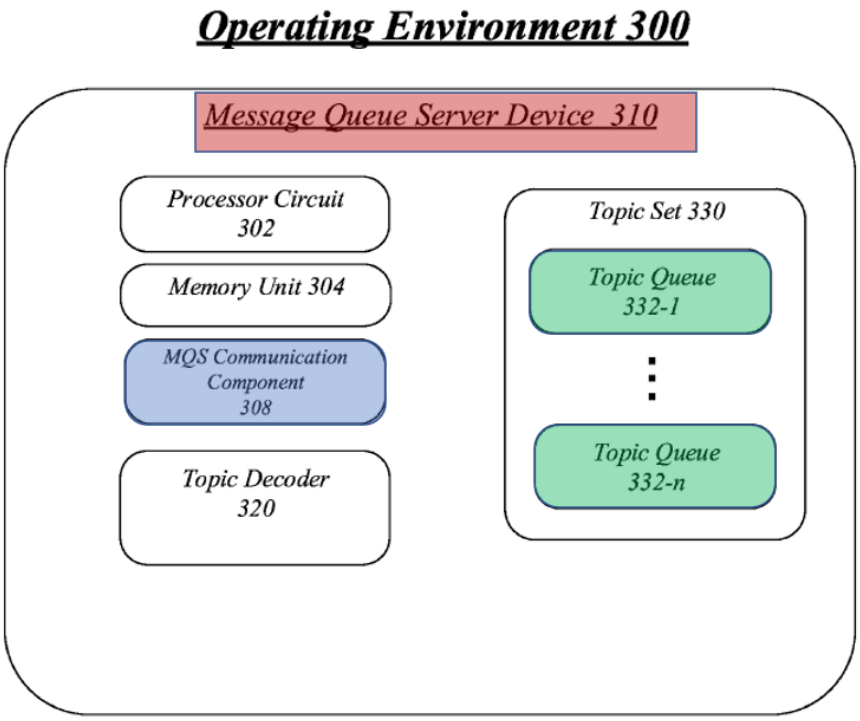

FIG. 3

Id. ¶55, Fig. 3. MQSD contains the MQS communication component which would allow the MQSD to communicate with the ERP Server, as contemplated in Spivey. *See id.* ¶¶46 (disclosing that communication component 308 transmits and receives data), 54 (disclosing that communication component 408 is analogous to 308), 55 ("LDS communication component 418 … allows [LDSD] to … transmit the data payloads to [MQSD]."); Ex.1015, Fig. 4.

458. After receiving the data, the MQSD organizes the received live data "into one or more of a plurality of topic queues" dedicated to storing information about "a specific game." *Id.* ¶¶47, 52. After sorting the data into the proper topic queues, the MQSD shares the information "substantially simultaneously" to "the subscribed connected client devices." *See id.* ¶96. Thus, a POSA would have understood that Herzog's ERP server transmitting HTTPS information to Spivey's MQSD as disclosing the '687's socket server being communicatively coupled to a control server.

vii. Limitation 1.7: "receive from the control server at least the first event information; and"

459. In my opinion, Herzog in view of Ellis and Spivey discloses this limitation. Herzog's ERP Server "receives the meta-data from ERP generator server 49 in HTTPS communication format" and "acts as an intermediary between the ERP generator server and the origin server." Ex.1015 ¶50. Figure 4 shows that the meta-data is provided to the origin server from the ERP server in HTTPS format:

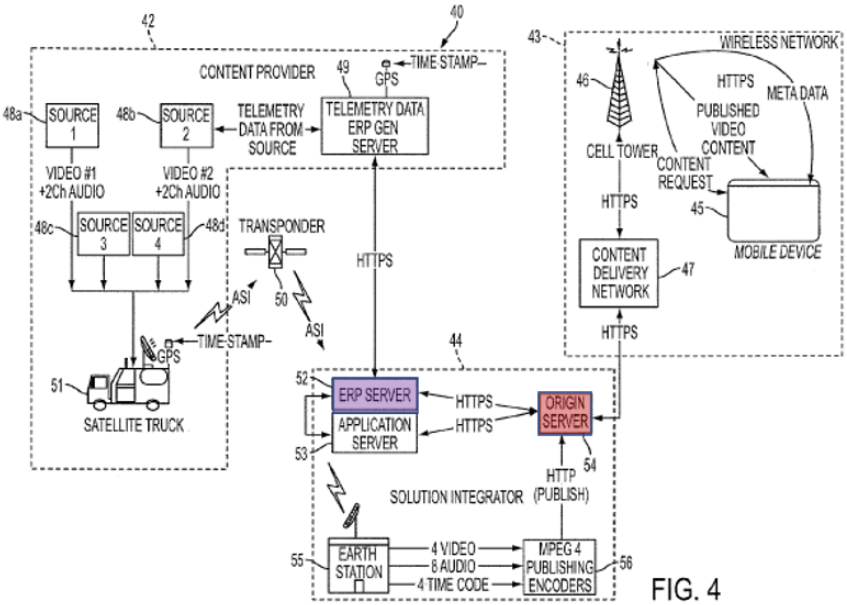

FIG. 4

Id. ¶¶50-51, Fig. 4. Incorporating Spivey's MQSD into Herzog's origin server would thus allow the MQSD (socket server) to receive from the ERP Server (control server) the meta-data provided (first event information). Thus, a POSA would have understood that Herzog in view of Ellis and Spivey discloses a socket server receiving from the control server at least the first event information.

viii. **Limitation 1.8: "transmit the first event information to at least the first viewer client device of the first plurality of viewer client devices via a first event information Internet communication channel between at least one first event socket of the at least one socket server and the first viewer client device of the first plurality of viewer devices, wherein the at least one first event socket corresponds to the first event information germane to the first live sporting event."**

460. In my opinion, Herzog in view of Ellis and Spivey discloses this limitation. This limitation requires (1) a first socket on the socket server that is

specifically dedicated to storing information about the first live event, (2) a first viewer client device of a group of VCDs that are watching a live stream of the first live event, and (3) transmitting event data about the first live event from the first socket to the VCD using an internet connection. *See* Ex.1003, Claim 1. These features are shown in Figure 2:

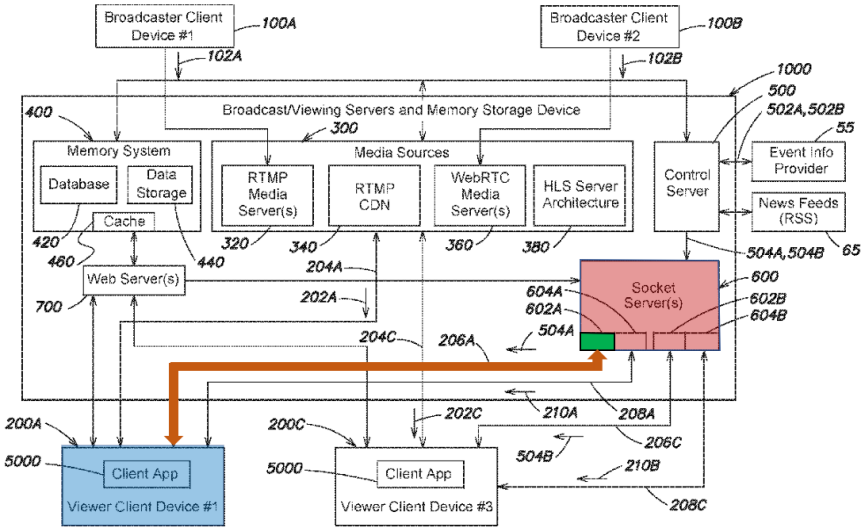

FIG. 2

Id., Fig. 2.

(A) First event socket corresponding to the first event information germane to the first live sporting event

461. The '687 explains that the socket server contains "one or more first event sockets 602A dedicated to the first event information." Ex.1003, 21:58-62. The first event socket has a corresponding EventID that the VCD "uses … to connect to [the] socket," *e.g.*, by using a "URL including the … EventID in a path of the URL." *Id.,* 21:63-22:8. Thus, a POSA would have understood a "socket" to be a

uniquely addressable communication endpoint on a server where first event information is provided to VCDs. *Id*., 20:55-21:4, 21:63-22:16. A first event socket corresponding to the first event information germane to the first live sporting event is simply a socket where information about one sporting event is provided to VCDs. *Id.*

462. In the same way, Spivey's topic queues are "where data payloads are placed" that, for example, "relate to a specific game between two NFL teams." Ex.1017 ¶¶51-52. The data payloads, "[w]hen then live event is a sporting event," include, "for example, a score, a play, …, and so forth." *Id.* ¶48. Topic queues have a corresponding "topic label" which is used "to identify a topic queue." *Id.* ¶49. "A topic label may be, for example" a "text string such as gamecenter.nfl.ravenssteelers." *Id.* ¶66.

463. Client devices use these topic label text strings to connect and subscribe to MQSD's topic queues. First, client devices "request a live data connection" with the MQSD by "select[ing] or enter[ing] the address or connection information to a particular" MQSD. *See id.* ¶¶81-82.[13] This "address may resemble a uniform

[13] Spivey often discusses a connection between the client device and the system using a live data access server ("LDAS"), however, Spivey also discloses that the message queue server device may be "accessible to clients over the network

resource locator (URL)." *Id.* ¶82. Second, as shown in Figure 9, client devices can use the topic labels to select "the topics available from [MQSD] in a topic selection list" and "subscribe to" those topic queues:

---

directly." Ex.1017 ¶36. For example, "MQS communication component 308 … may push data from topic queues 332-1, 332-n to the subscribers of the topics corresponding to those topic queues." *Id.* ¶46, Fig. 12. Also, the system does not require an LDAS, only that it "may include a[n] [LDAS]." *Id.* ¶38. Thus, a POSA would have understood Spivey to disclose a direct connection between the client devices and MQSD. §X.B.3.c.viii, *supra*.

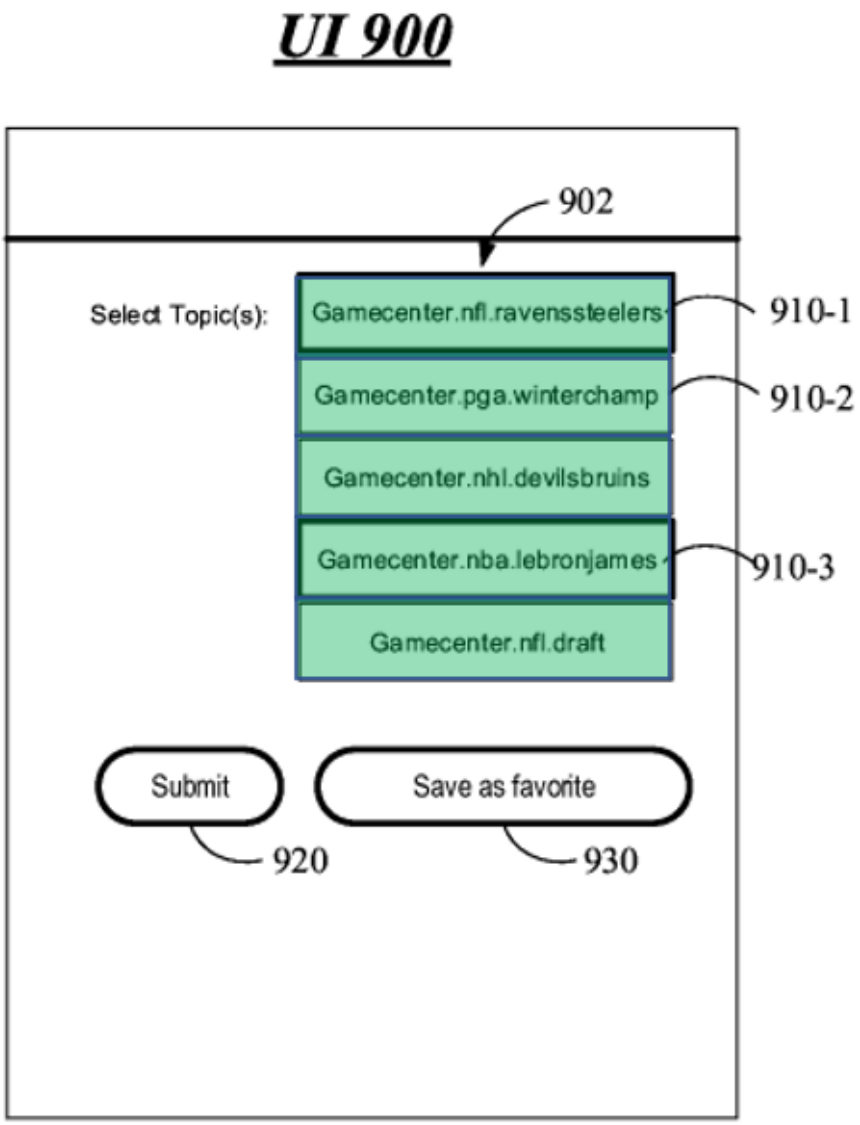

FIG. 9

Id. ¶¶83-84, Fig. 9. Third, "the data payload" may be pushed to the subscribed connected devices that requested that topic. *Id.* ¶96. Thus, a POSA would have understood that Spivey's topic queues disclose the '687's first event sockets corresponding to the first event information germane to the first live sporting event.

(B) Transmitting the first event information to at least the first VCD of the first plurality of VCDs

464. As discussed in Limitations 1.3 and 1.4, Herzog discloses a first VCD of the first plurality of VCDs. *See* §X.B.3.a.iv, *supra.* Both Herzog and Spivey further disclose transmitting the first event information to the first/second VCD of the first plurality of VCDs. For example, in Spivey, the MQSD "may push data from topic queues … to the subscribers of the topics corresponding to those topic queues." Ex.1017 ¶46. In Herzog, the Origin Server may be configured to transmit "the meta-data to the content delivery network 47," which the user receives "in an HTTPS communications protocol." Ex.1015 ¶51.

(C) Transmitting via a first event information Internet communication channel between at least one first event socket of the at least one socket server and the first VCD of the first plurality of VCDs

465. According to the '687, a "'communication channel' refers to a physical or logical connection over a transmission medium to convey information signals from one or more senders to one or more receivers." Ex.1003, 5:38-45. The '687 explains that these connections "would be readily appreciated in the relevant arts." *Id.* The '687 describes a first "event information" Internet communication channel as one between a first event socket of the socket server and the client device that conveys event information related to the first event. *Id.,* 5:45-58. The first event socket has a corresponding EventID that the VCD "uses … to connect to [the] socket," *e.g.*, by using a "URL including the … EventID in a path of the URL." *Id.,*

21:63-22:8. Thus, a POSA would appreciate that this connection and communication channel is an internet connection between a server that contains information related to a live event and a user who is streaming, from a different server, video of the same live event. *Id*., 5:38-45, 22:62-23:9.

466. Herzog in view of Ellis and Spivey discloses providing first event information over a separate internet communication channel. Spivey's system is based on providing "live event data in real time." Ex.1017, Abstract. The MQSD can be an "internet server." *See id.* ¶35. Spivey communicates with client devices over "any … combination of wired and/or wireless networks including … the Internet." *Id.* ¶179. For example, client devices "may request and participate in a websocket connection," which "typically comprises a two-way connection between two entities." *Id.* ¶¶43, 61. Moreover, consistent with Spivey, Herzog discloses providing event information over a separate communication path than the video signal where there is "a unique video and meta-data source that do not follow the same path of transmission:"

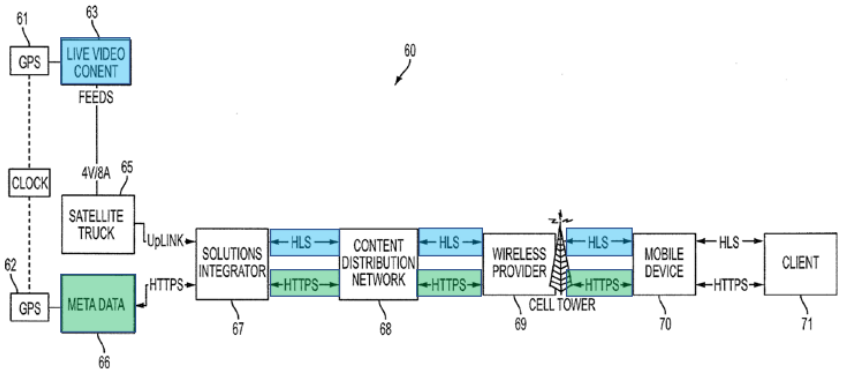

FIG. 5

Ex.1015 ¶47-51, 83, Figs. 1, 4, 6. Thus, a POSA would have understood Spivey to disclose transmitting first event information via a separate internet connection.

467. Further, this information is provided via a connection between a topic queue (socket location identifiable by an address) and the first user equipment device. Users can access the MQSD using a URL. *See* Ex.1017 ¶¶81-82. Then, the user can access the specific topic queue she wishes to receive information from by using a text string, *e.g.*, a topic label or Event ID, associated with a topic queue. *Id.* ¶179, Fig. 9 ("Gamecenter.nfl.ravenssteelers."). Thus, A POSA would have understood that Herzog in view of Ellis and Spivey discloses distributing event information from a socket to a user device over an internet connection. Further, A POSA would have understood that the internet connection is established using a URL and text string identifying a uniquely addressable communication endpoint on the MQSD, where first event information is transmitted to a VCD.

b. Dependent Claim 2

i. Limitation 2.0: "The system of claim 1, wherein:"

468. In my opinion, Herzog in view of Ellis and Spivey discloses this limitation. *See* Claim 1. §X.B.3.a, *supra*.

ii. Limitation 2.1: "the first live stream of digital content and the second live stream of digital content both relate to the first live sporting event;"

469. In my opinion, Herzog in view of Ellis and Spivey discloses this limitation. The '687 explains that the media sources can provide two different live streams of digital content related to "the same live event." Ex.1003, 23:17-28. Herzog discloses a broadcasting system where in one embodiment, "four video/audio streams" are provided from the same live sporting event, e.g., an "Indy Race." Ex.1015 ¶46. Herzog explains that "any number of sources may be available" from the same event. *Id*. Examples of this video include "live videos of four of the drivers inside their respective vehicles" or may be "multiple video/audio streams of race cars and drivers, as they are imaged at different locations on the race track." *Id.* ¶¶45, 80. User devices can "initiate[] a video request of one or more channels of video/audio for viewing a live event on the device display." *Id.* ¶70

470. Multiple users selecting the same stream of video would create a plurality of viewers of that live stream of digital content and all would receive their own copy of the live stream. The live stream is then "published" to the user device via "content delivery network 47" using "an HTTPS Live Streaming (HLS)-based media streaming communications protocol." Ex.1015 ¶¶51, 55. Thus, Herzog in view of Ellis and Spivey discloses this limitation.

iii. **Limitation 2.2: "in C), the at least one socket server further transmits the first event information for the first live sporting event to at least the first viewer client device of the second plurality of viewer client devices via a second event information Internet communication**

channel between the at least one first event socket of the at least one socket server and the first viewer client device of the second plurality of viewer devices."

471. In my opinion, Herzog in view of Ellis and Spivey discloses this limitation. Spivey discloses the at least one socket server, transmitting first event information for the first live sporting event via an event information Internet communication channel between the at least one first event socket of the at least one socket server and the first VCD of a plurality of VCDs. *See* §X.B.3.a, *supra*. Here, the claim requires providing the same event information, over a separate connection, between the first event information socket to another user, who is watching a different live stream of the same live event, such as one of the videos from Herzog's "Indy Race." Ex.1003, Claim 2.

472. Herzog in view of Ellis discloses multiple groups watching different live streams of digital content of the same game. §X.B.3.b.ii, *supra*. Further, Spivey discloses transmitting "data from topic queues … to the subscribers of the topics corresponding to those topic queues" on individual internet connections. Ex.1017 ¶46; *see* §X.B.3.a.viii, *supra*. Thus, a first viewer from the second plurality, *i.e.*, a viewer watching video stream two from the Indy Race, would receive the race updates, e.g., car position, acceleration, over a separate internet connection, between her device to the first event socket, *i.e.*, the topic queue.

c. Dependent Claim 3

i. **Limitation 3.0: "The system of claim 2, wherein:"**

473. In my opinion, Herzog in view of Ellis and Spivey discloses this limitation. *See* Claim 2. §X.B.3.b, *supra*.

ii. **Limitations 3.1 and 3.2: "none of the first event information is included in the first copy of the first plurality of copies of the first live stream of digital content provided to the first viewer client device of the first plurality of viewer client devices via the first video Internet communication channel; and none of the first event information is included in the first copy of the second plurality of copies of the second live stream of digital content provided to the first viewer client device of the second plurality of viewer client devices via the second video Internet communication channel."**

474. In my opinion, Herzog in view of Ellis discloses this limitation. The '687 describes first event information as, for example, "team information," "score information," "player information," and "venue information." Ex.1003, 4:50-5:15. Further the '687 requires that this event information is provided via an "'event information' Internet communication channel" that is different than the channel on which the live stream of digital content is distributed, *i.e.*, the "'video' Internet communication channel." *Id.*, 5:38-53.

475. As explained in Claims 1 and 2, Herzog in view of Ellis discloses that the Encoders first stream "video content with timecode to the content delivery network on command from the mobile device." Ex.1015 ¶¶49, 51. The available

video streams include "a camera positioned inside a race car" or "video/audio streams of race cars and drivers, as they are imaged at different locations on the race track." *Id.* ¶¶45-46. A POSA would have understood that these video streams do not include any event information as contemplated by the '687 and are simply two different video streams of the same live event, to multiple different users over individual connections. *Id.*, Figs. 4, 5. Only after the first copies of the video live streams are received by the users does the system even provide the available meta-data (event information) list for users to select. *Id.* ¶51. Thus, a POSA would have understood Herzog to disclose a system that does not provide event information in the first copies of live streams of digital content provided via video internet communication channels.

d. Dependent Claim 4

i. Limitation 4.0: "The system of claim 2, wherein:"

476. In my opinion, Herzog in view of Ellis and Spivey discloses this limitation. *See* Claim 2. §X.B.3.b, *supra*.

ii. Limitation 4.1: "in A), the plurality of media sources:"

477. In my opinion, Herzog discloses this limitation. *See* Limitation 1.1. §X.B.3.a.ii, *supra.*

iii. Limitations 4.2 and 4.3: "provide a second copy of the first plurality of copies to a second viewer client device of the first plurality of viewer

> **client devices via a third video Internet communication channel between the plurality of media sources and the second viewer client device of the first plurality of viewer client devices; and provide a second copy of the second plurality of copies to a second viewer client device of the second plurality of viewer client devices via a fourth video Internet communication channel between the plurality of media sources and the second viewer client device of the second plurality of viewer client devices; and"**

478. In my opinion Herzog and Herzog in view of Ellis discloses these limitations. These limitations are substantially the same as limitations 1.3 and 1.4. Specifically, these limitations add providing a second copy, *i.e.*, another copy, of the first/second plurality of copies to a second VCD of the first/second VCDs via a third/fourth connection:

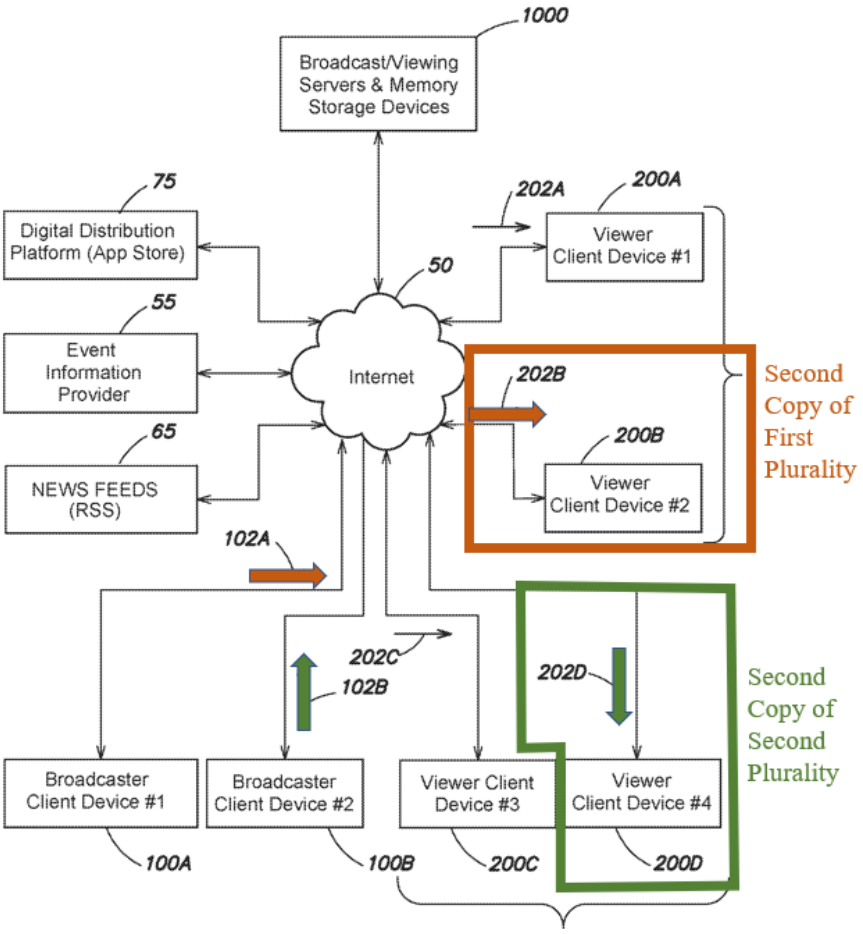

Ex.1003, 15:22-33, Fig. 1A (annotated).

479. Herzog discloses these limitations for the same reasons as discussed in section X.B.3.a.iv, *supra*. Specifically, Herzog and Herzog in view of Ellis discloses providing individual copies, to multiple different users, of multiple different live streams of digital content, related to the same game, over individual "video" internet connections. §§X.B.3.a.iv, X.B.3.b, *supra*.

iv. **Limitation 4.4: "in C), the at least one socket server:"**

480. In my opinion, Herzog in view of Ellis and Spivey discloses this limitation. *See* Limitation 1.6. §X.B.3.a.vi, *supra.*

v. **Limitations 4.5 and 4.6: "transmits at least the first event information to the second viewer client device of the first plurality of viewer client devices via a third event information Internet communication channel between the at least one first event socket of the at least one socket server and the second viewer client device of the first plurality of viewer devices; and transmits at least the first event information to the second viewer client device of the second plurality of viewer client devices via a fourth event information Internet communication channel between the at least one first event socket of the at least one socket server and the second viewer client device of the second plurality of viewer devices."**

481. In my opinion, Herzog in view of Ellis and Spivey discloses these limitations. These limitations are substantially the same as limitations 1.8 and 2.2. §§X.B.3.a.viii, X.B.3.b.iii. These limitations simply add transmitting the first event information, to a second VCD, of the same first/second plurality of VCDs.

482. Both Herzog and Spivey further disclose transmitting the first event information to the second VCD of the previously mentioned first/second plurality of VCDs. For example, in Spivey, the MQSD "may push data from topic queues … to the subscribers of the topics corresponding to those topic queues." Ex.1017 ¶46. In Herzog, the meta-data is provided "to users/consumers of the content." Ex.1015 ¶¶49, 51; *see id.* ¶74 (discussing that users receive the meta-data "associated with

… a particular video channel"). Thus, a POSA would have understood that Herzog and Spivey both disclose these limitations because both disclose transmitting the first event information to multiple VCDs of the first/second plurality of VCDs.

e. Dependent Claim 5

i. Limitation 5.0: "The system of claim 2, wherein in C), the at least one socket server further:"

483. In my opinion, Herzog in view of Ellis and Spivey discloses this limitation. *See* Claim 2. §X.B.3.b, *supra*.

ii. Limitations 5.1 and 5.2: "transmits and receives first chat information regarding the first live stream of digital content via at least one first chat/system event Internet communication channel between at least one first chat/system event socket of the at least one socket server and the first viewer client device of the first plurality of viewer client devices, wherein the at least one first chat/system event socket corresponds to the first chat information; and transmits and receives second chat information regarding the second live stream of digital content via at least one second chat/system event Internet communication channel between at least one second chat/system event socket of the at least one socket server and the first viewer client device of the second plurality of viewer client devices, wherein the at least one second chat/system event socket corresponds to the second chat information."

484. In my opinion, Herzog in view of Ellis and Spivey discloses these limitations. Herzog in view of Ellis and Spivey discloses transmitting information via individual communication channels between a socket and a first VCD of a

first/second plurality of VCDs who are watching the same event. §§X.B.3.a.viii, X.B.3.b.iii, *supra*. The '687 explains that this chat/system event communication channel may be any generic internet communication channel. Ex.1003, 5:38-45. These limitations only further require that the system "transmits and receives" first/second "chat information regarding" the first/second "live stream of digital content" over another separate, individual connection between a first/second "chat/system event socket" and a first/second VCD:

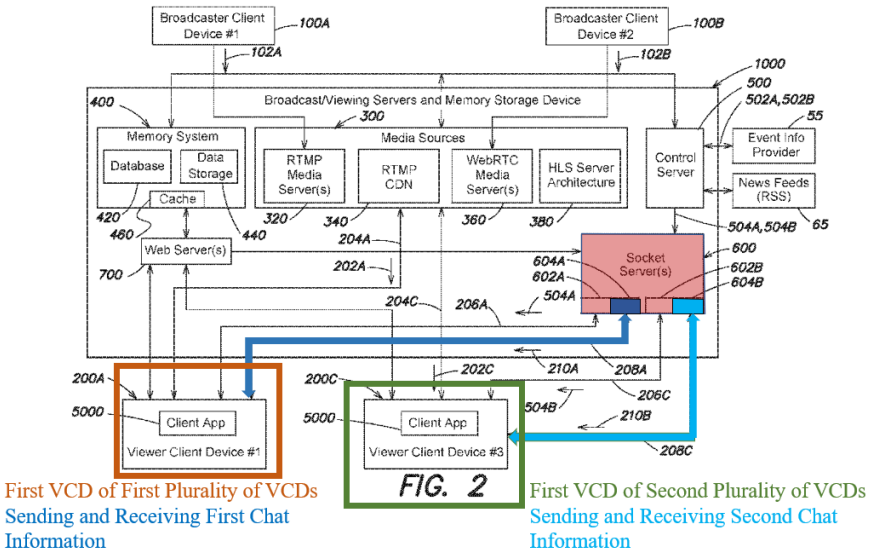

Id., 22:17-48, Claim 5, Fig. 2 (annotated). In sum, the '439 Patent explains that these limitations require that chat information is transmitted and received over a third communication channel from another socket that is dedicated for chat/system information.

485. The '687 describes chat information as communications "between a given broadcaster … and corresponding viewers … of chat messages." Ex.1003,

20:22-27. Further, "viewers of the same live event may" view different video feeds of the same live event and "participate in different chat information exchanges … and all share the same event information in a synchronized manner." *Id.,* 23:17-28. Additionally, the '687's explanation of chat/system event sockets indicate that they are the same as the other sockets, *i.e.*, a communication endpoint on a server that is uniquely addressable, *e.g.*, by using an identifier (StreamID) that may be contained, *e.g.*, in a URL. *Id*., 20:55-21:4, 21:63-22:16. The only difference is that these sockets store and send chat messages, not "event data." *See id.,* 23:55-24:15.

486. Ellis discloses chat information because users "may also leave feedback regarding the commentary that other users in the media system may view when they access the same commentary." Ex.1016 ¶132. Thus, a POSA would have understood that Herzog in view of Ellis and Spivey discloses a system that transmits and receives first/second chat information regarding the first/second live stream of digital content. *Id.* ¶126 ("To create and send a message (e.g., instant message or email message), the user may select send message option.").

487. Ellis, consistent with Herzog's separate meta-data stream, also discloses providing this event data and chat information on a separate channel to users. Ex.1015 ¶¶49-53, 59-61, Fig. 5; Ex.1016 ¶¶39-41, Fig. 1. Ellis discusses transmitting the video "broadcasts" over communication path 150 and "game summary information, … and any other sports-related information" over

communication path 152. Ex.1016 ¶41; *see* §X.B.3.c.ii. Consistent with Herzog, Ellis provides that in "some embodiments, this sports-related information is provided to user equipment 102 as a plurality of real-time data feeds." Ex.1016 ¶41. Thus, A POSA would have understood that Herzog in view Ellis of Spivey discloses transmitting via at least one first/second chat/system event Internet communication channel between at least one first/second chat/system event socket of the at least one socket server and the first VCD of the first/second plurality of VCDs.

488. Herzog in view of Ellis and Spivey discloses a socket specifically designated for chat information. Spivey utilizes topic queues to organize "data payloads" that "relate to a specific game between two NFL teams." Ex.1017 ¶¶51-52; *see* X.B.3.a.viii, *supra*. The data payloads, "[w]hen the live event is a sporting event," include, "for example, a score, a play, …, and so forth." Ex.1017 ¶48. Topic queues may be "hierarchically related." *Id.* ¶52. This means that when the system looks at the text string associated with the data payload, the system "may place the data payload only in the topic queue exactly matching the topic label." *Id.* ¶104. For example, if there were two topics "at the same hierarchical level" the data payloads placed in "'gamecenter.nfl.ravenssteelers.statistics' would not be placed in" another topic queue "gamecenter.nfl.ravenssteelers.plays." *Id*. In sum, the statistics would be provided separately from the other information, e.g., chat

information. Thus, a POSA would have understood Spivey to disclose a first/second chat/system event socket corresponding to the first/second chat information.

f. Dependent Claim 6

i. Limitation 6.0: "The system of claim 5, wherein at least one of the first chat information and the second chat information comprises at least one of:"

489. In my opinion, Herzog in view of Ellis and Spivey discloses this limitation. *See* Claim 5. §X.B.3.e, *supra*.

ii. Limitations 6.1, 6.2, and 6.3: "advertising or branding relating to a sponsor of at least one of the first live stream of digital content and the second live stream of digital content; at least one digital gift; and at least one sponsorship."

490. In my opinion, Herzog in view of Ellis and Spivey discloses these limitations. Claim 6 of the '687 requires that the chat information includes at least one of advertising relating to a first sponsor, a digital gift, and a sponsorship. Ex.1003, Claim 6. The '687 explains that advertising or branding may include "screen animations, customized displays, or screen backgrounds, and/or other special effects graphics." *Id.,* 6:37-57. The advertising or branding may come from "sponsors of a broadcaster, sponsors of an event about which a broadcaster is providing commentary, [or] participants in the event itself, etc." *Id.* Further, digital gifts may include "one or more viewers" providing "other viewers" with "digital beers, various digital concession stand items, ticker tapes, penalty flags, etc." that is

"communicated between client devices … via a chat/system event Internet communication channel." *Id.*

491. Herzog in view of Ellis discloses a system that "provides a number of opportunities for targeted advertising." Ex.1016 ¶140. The system discloses opportunities for advertisements "targeted based on … user profile information." *Id.* As would be obvious in such a system that provides live broadcasts/streams of sporting events, the advertising content would contain general sponsorship opportunities as well, distributed to all audience members. Moreover, Ellis describes displaying advertisements, such as to "purchase Yankees tickets," on "any of the display screens shown." *Id.* These interactive displays are separate from the broadcast video feed and would come from the meta-data stream, i.e., the ERP server distribution system. *See* §X.B.3.a.viii, *supra*. Further, Ellis discloses a wagering system that "may enhance marketing and advertising efforts" by crediting users with "$100 when they sign up for a wagering account." Ex.1016 ¶119. Thus, a POSA would have understood Herzog in view of Ellis to disclose a system for providing advertising, branding, sponsorship, and digital gifts that are separate from the video broadcast.

492. Regarding structure, and how Herzog in view of Ellis would distribute this information, as discussed in Claim 5, Spivey discloses providing a topic queue, *i.e.*, socket, for chat information and other game information that is not included in

the real-time statistics topic queue. §X.B.3.e.ii, *supra*. Thus, a POSA would have understood that Ellis in view of Spivey discloses providing at least one of Ellis's advertising, branding, sponsorships, or digital gifts included in the first/second chat information. *See* §X.B.3.e.ii, *supra*.

g. Dependent Claim 7

i. Limitation 7.0: "The system of claim 5, wherein:"

493. In my opinion, Herzog in view of Ellis and Spivey discloses this limitation. *See* Claim 5. § X.B.3.e, *supra*.

ii. Limitation 7.1: "in A), the plurality of media sources:"

494. In my opinion, Herzog in view of Ellis and Spivey discloses this limitation. *See* Limitation 1.1. §X.B.3.a.ii, *supra.*

iii. Limitations 7.2 and 7.3: "provide a second copy of the first plurality of copies to a second viewer client device of the first plurality of viewer client devices via a third video Internet communication channel between the plurality of media sources and the second viewer client device of the first plurality of viewer client devices; and provide a second copy of the second plurality of copies to a second viewer client device of the second plurality of viewer client devices via a fourth video Internet communication channel between the plurality of media sources and the second viewer client device of the second plurality of viewer client devices; and"

495. In my opinion, Herzog in view of Ellis discloses these limitations. *See* Limitations 4.2 and 4.3. §X.B.3.d.iii, *supra*.

iv. **Limitation 7.4: "in C), the at least one socket server:"**

496. In my opinion, Herzog in view of Ellis and Spivey discloses this limitation. *See* Limitation 1.6. §X.B.3.a.vi, *supra.*

v. **Limitations 7.5 and 7.7: "transmits at least the first event information to the second viewer client device of the first plurality of viewer client devices via a third event information Internet communication channel between the at least one first event socket of the at least one socket server and the second viewer client device of the first plurality of viewer devices; transmits at least the first event information to the second viewer client device of the second plurality of viewer client devices via a fourth event information Internet communication channel between the at least one first event socket of the at least one socket server and the second viewer client device of the second plurality of viewer devices; and"**

497. In my opinion, Herzog in view of Ellis and Spivey discloses this limitation. *See* Limitations 4.5 and 4.6. §X.B.3.d.v, *supra*.

vi. **Limitations 7.6 and 7.8: "transmits and receives the first chat information regarding the first live stream of digital content via at least one third chat/system event Internet communication channel between the at least one first chat/system event socket of the at least one socket server and the second viewer client device of the first plurality of viewer client**

devices; transmits and receives the second chat information regarding the second live stream of digital content via at least one fourth chat/system event Internet communication channel between the at least one second chat/system event socket of the at least one socket server and the second viewer client device of the second plurality of viewer client devices."

498. In my opinion, Herzog in view of Ellis and Spivey discloses these limitations. *See* Limitations 5.1 and 5.2. §X.B.3.e.ii, *supra*.

h. Dependent Claim 8

i. **Limitation 8.0: "The system of claim 1, further comprising a memory system communicatively coupled to the control server, the memory system including a database, wherein in B) the control server:"**

499. In my opinion, Herzog in view of Ellis and Spivey discloses this limitation. *See* Claim 1. §X.B.3.a. Herzog and Spivey both disclose a memory system, including a database, communicatively coupled to the ERP server (control server). The '687 explains that the database must be capable of storing "information." *See* Ex.1003, 17:48-55. Thus, a POSA would have understood that the '687's database is a generic server where an organized collection of structured data is stored.

500. Herzog explains that first the meta-data (event information) is "sent to the ERP server." Ex.1015 ¶67. Second, the client requests and "receives the HLS video." *Id*. ¶73. Third, a "user initiates a request for meta-data that is associated

with the VITC time stamp of a particular video channel on the display of the video player." *Id.* ¶74. Only then, does Herzog's ERP Server in "response to the request for meta-data" "transmit[] the meta-data with a corresponding .JSON time stamp of the live event." *Id.* ¶¶74-76. Thus, Herzog's ERP server stores the meta-data until a user requests the data. *See id.*, ¶¶67-77. This information would be organized and stored on a "database," because "functions relating to" distributing content "may be implemented on computers" that operate "as the various servers" implementing "database functions." Ex.1015 ¶¶83, 86 (discussing that all servers contain a "data storage" that can be "implemented in a distributed fashion on a number of similar platforms").

501. Thus, a POSA would have understood that Herzog's database discloses memory systems including a database communicatively coupled to the control servers.

ii. **Limitations 8.1-8.7: "retrieves first event data for the first live sporting event, the first event data including at least one of: the type of the first live sporting event;**
an event identifier (EventID) for the first live sporting event;
a status of the first live sporting event;
progress details for the first live sporting event;
a date and/or time of the first live sporting event; and
event participant data regarding participants in the first live sporting event;"

502. In my opinion, Herzog in view of Ellis and Spivey discloses these limitations. These limitations require a control server to retrieve first event data for the first live sporting event including at least one of an event identifier (*e.g.*, source ID, topic label), a status of the live event, progress details, a date and/or time, and event participation data as explained above. Ellis discloses retrieving, among other data, at least the time remaining (progress details), quarter (status), down, and yards remaining. Ex.1016 ¶72, Fig 4. Ellis also discusses providing a "program schedule" (date/time), source ID (event identifier), and type of event, *e.g.*, "college football." *Id*. ¶3, Figs. 2B, 22. Additionally, Herzog also retrieves meta-data including time information (date and/or time), "varying parameters regarding the status of each car and driver in the race" (progress details), "lap number" (status), "car speed and acceleration" (participant data). Ex.1015 ¶¶17, 45, 58. Spivey discloses retrieving, among other data, at least a score, an injury, an error, a name of the player that scored or made a play (participant data). Ex.1017 ¶66. Thus, Herzog in view of Ellis and Spivey discloses these limitations. *See* §X.B.3.a.v, *supra*.

iii. **Limitations 8.8 and 8.9: "normalizes at least the date and/or time of the first live sporting event to a reference standard time to provide a normalized date and/or time; and stores the first event data and the normalized date and/or time in the database."**

503. In my opinion, Herzog in view of Ellis and Spivey renders this limitation obvious. Normalizing the date/time means nothing more than

"converting" the event data "from UTC to EST/EDT" *i.e.*, a "particular reference frame." Ex.1003, 46:64-47:17. In any system that provides event data about multiple different live events to users that are not restricted geographically, such as the system presented in this ground, a content and meta-data distribution system of multiple live events, it would be obvious and standard to first convert the time stamps to a local time before storing the data, i.e., normalize the data, including the data and/or time of the first live sporting event to a reference standard time to provide a normalized date and/or time.

504. Normalizing, i.e., converting the time stamp is particularly obvious in this content distribution system, where Ellis contemplates using this data to allow users to place bets. Ex.1016 ¶13. A POSA would structure such a system to reduce formatting and conversion errors, such that as many conversions as possible would be under the control of the centralized system, e.g., the database, rather than at the user device level. Control is the main reason why you would handle this at the system, rather than at the client device. For instance, allowing the user device to be responsible for conversions could lead to system errors (inadvertently or not) which could, among other issues, influence the betting ticket entry time could lead to users placing bets during time frames when bets should be disabled, e.g., after the betting window ended. Herzog discloses storing the first event data, including normalized

date and/or time data in the database. §X.B.3.h.i, *supra*. Thus, Herzog in view of Ellis and Spivey render this limitation obvious.

i. Dependent Claim 9

i. Limitation 9.0: "The system of claim 8, wherein:"

505. In my opinion, Herzog in view of Ellis and Spivey discloses this limitation. *See* Claim 8. §X.B.3.h, *supra*.

ii. Limitation 9.1: "the progress details include the first event information;"

506. In my opinion, Herzog, Ellis, and Spivey all disclose this limitation. The '687 explains that progress details include "quarter, period, inning, half-time; for baseball—balls, strikes, base information; for football—possession, down, yards to go; for basketball—timeouts, fouls." Ex.1003, 47:4-15. Herzog discloses that the system provides racer's "status of each car and driver in the race" including "lap number, car speed and acceleration, tire pressure, etc." as well as "many as 50 different parameters that are available." Ex.1015 ¶45. Also, Ellis discloses this function, providing "detailed game information, including time remaining, quarter, down, yards remaining to first down, field location, and summary information:"

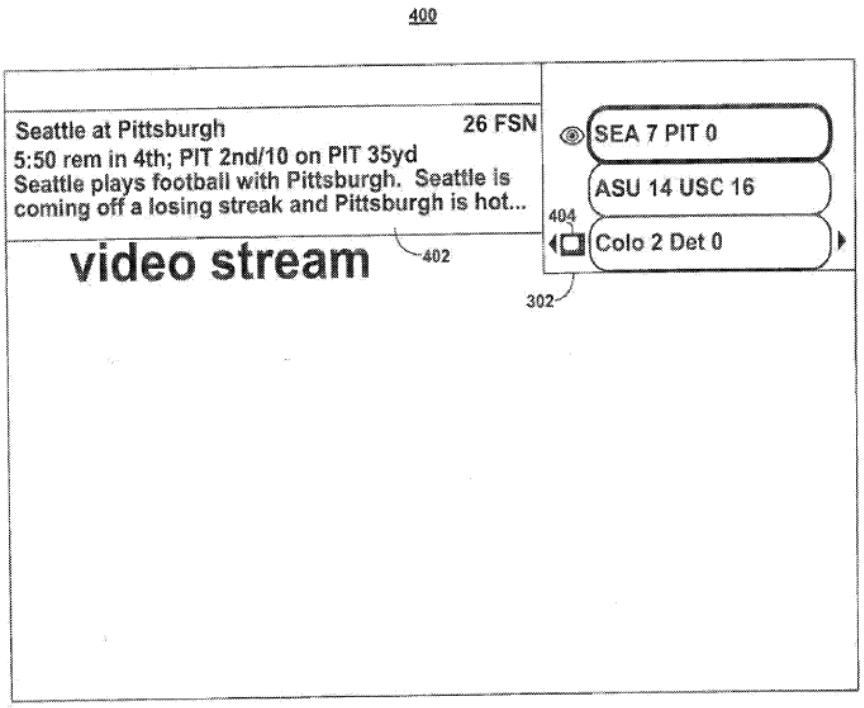

FIG. 4

Ex.1016 ¶72, Fig. 4. Moreover, Spivey discloses providing "a player at-bat," which would include balls and strikes. Ex.1017 ¶48. Thus, a POSA would have understood that Herzog, Spivey, and Ellis all disclose progress details, i.e., one or more items about a moment in a live event, that include the first event information.

iii. **Limitation 9.2: "the control server periodically retrieves the progress details from the event information provider and updates the first event information; and"**

507. In my opinion, Herzog discloses this limitation. Herzog discloses a control server (ERP Server) periodically retrieving real-time information from the event information provider (ERP Gen Server) that includes progress details. *See* Ex.1015 ¶48-50; *see also*, Ex.1017 ¶48 (disclosing a score, play, error, and at-bat

updates); §§X.B.3.a.v, X.B.3.*i*.ii, *supra*. The only remaining portion of this limitation is that the system needs to "update the first event information." This requires that the system update the database of Claim 8 with the progress details that were just retrieved. Herzog in view of Ellis and Spivey discloses this limitation for the same reasons it discloses "stor[ing] the first event information … in the database." §X.B.3.*i*.i, *supra*.

iv. **Limitation 9.3: "for each update of the first event information, the control server queues an asynchronous message including the updated first event information for transmission to the at least one first event socket of the at least one socket server."**

508. In my opinion, Herzog in view of Ellis and Spivey discloses this limitation. The term "asynchronous message" is only used in the '687's claims. *See* Ex.1003, Claim 9. But the '687 does discuss an "asynchronous queue" as a set of "tasks to process" that can either be small "(e.g., at any given second it may be between 0-10 items)" but can "grow [] to a larger size (e.g., 1000 items)." *Id.,* 47:66-48:9. Thus, a POSA would have understood that this limitation requires that for each first event information update at the control server, the control server readies a delayed message including the first event information, that will be processed and sent to the socket server's first event socket in turn.

509. In the same way, Herzog's ERP server delays updates to the Origin (socket) server. For example, the ERP server receives all the meta-data from the

ERP generator server. *See* Ex.1015 ¶50. The ERP server cannot stream all the retrieved data to the origin server, however, because some of the meta-data is sensitive competition data, e.g., tire pressure. *Id.* This information is screened in broadcast systems, such as advanced analytics or when a coach calls a play or discusses what they are seeing in real time on the field. All is usually screened from the user. Thus, the ERP server must first "filter and eliminate contents of meta-data." *Id.* Only afterwards, can the ERP server provide the delayed information update to the origin server, i.e., the socket server. *Id.* Thus, a POSA would have understood that this meta-data (event information) update is an asynchronous message that includes the updated meta-data that is transmitted to the origin server (first event socket).

j. Independent Claim 19

i. **Limitation 19.0: "A system for providing a first plurality of copies of a first live stream of digital content relating to a first live sporting event to a first plurality of viewer client devices, and for providing a second plurality of copies of a second live stream of digital content relating to a second live sporting event to a second plurality of viewer client devices, the system comprising:"**

510. In my opinion, Herzog in view of Ellis discloses this limitation. This limitation is substantially the same as the '687's limitation 1.0, except that limitation 19.0 requires the live stream of digital content be related to a second live sporting

event. *See* Ex.1003, Claims 1, 19. Ellis discloses a system where there are multiple live streams of digital content about "a plurality of sporting events:"

220

Tuner (222)	Primary Source ID (224)
1	<sourceid_2>
2	<sourceid_1>
3	<sourceid_8>
4	<sourceid_4>

230

Source ID (232)	Type (234)	Profile Score (236)
<sourceid_1>	Game	90
<sourceid_2>	Game	95
<sourceid_3>	Commentary	45
<sourceid_4>	News	75
<sourceid_5>	Movie	25
<sourceid_6>	Movie	35
<sourceid_7>	Highlights	65
<sourceid_8>	Game	80

Ex.1016 ¶¶11, 39-42, Fig. 2B; §X.B.3.a.i. As shown below, in Figure 9, Ellis offers multiple live sports to users to view:

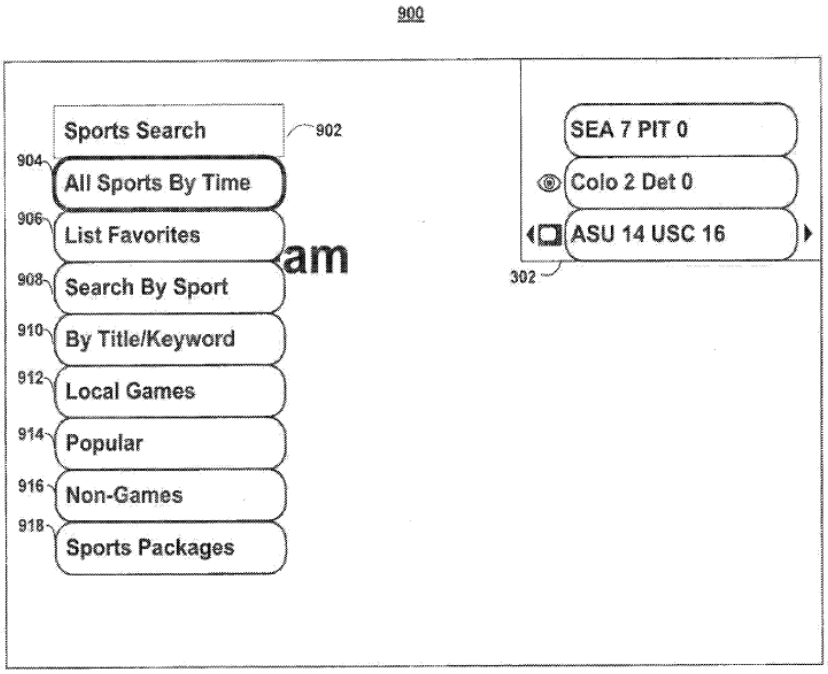

FIG. 9

Id., Fig. 9 (note that the words "video stream" is behind the sports selection). Thus, Herzog in view of Ellis discloses this limitation.

ii. **Limitation 19.1: "A) a plurality of media sources to:"**

511. In my opinion, Herzog in view of Ellis discloses this limitation. *See* Limitation 1.1. § X.B.3.a.ii, *supra.*

iii. **Limitation 19.2: "receive the first live stream of digital content and the second live stream of digital content;"**

512. In my opinion, Herzog in view of Ellis discloses this limitation. *See* Limitation 1.2. § X.B.3.a.iii, *supra.*

iv. **Limitations 19.3 and 19.4: "provide a first copy of the first plurality of copies to a first viewer client device of the first plurality of viewer client devices via a first Internet communication channel between the plurality of media sources and the first viewer client device of the first plurality of viewer client devices; and provide a first copy of the second plurality of copies to a first viewer client device of the second plurality of viewer client devices via a second Internet communication channel between the plurality of media sources and the first viewer client device of the second plurality of viewer client devices;"**

513. In my opinion, Herzog in view of Ellis discloses this limitation. *See* Limitations 1.3 and 1.4. §X.B.3.a.iv, *supra*. These limitations are substantially the same as the '687's limitations 1.3 and 1.4, except that the communication channel has a different name and, as noted in 19.0, there exists a second live event. Ex.1003, Claims 1 (first/second "video Internet communication channel"), 19 (first "Internet communication channel"). This name difference does not change the functionality

or structure of the channel, which is a generic internet communication channel and Ellis discloses a multi-live event system. *See* §X.B.3.a.iv(C), *supra*.

v. **Limitation 19.5: "B) a control server to periodically retrieve, via the Internet, first event information germane to the first live sporting event and second event information germane to the second live sporting event; and"**

514. In my opinion, Herzog in view of Ellis discloses this limitation. This limitation is substantially the same as the '687's limitation 1.5, except that the control server in limitation 19.5 retrieves second event information germane to the second live sporting event. Ex.1003, Claims 1, 19. Herzog in view of Ellis discloses a multiple-sporting-event system that retrieves real-time data for all events. §X.B.3.a, *supra*. It would make no sense for a POSA, building onto Herzog's single event system, to not also include event data related to the second event. When a POSA built out Herzog's system, they would configure the ERP server to receive live event data from every live event, over the internet, as described in claim 1. Thus, a POSA would have understood that Herzog in view of Ellis discloses this limitation for the same reasons as stated above. §X.B.3.a.v, *supra.*

vi. **Limitation 19.6: "C) at least one socket server communicatively coupled to the control server to:"**

515. In my opinion, Herzog in view of Ellis and Spivey discloses this limitation. *See* Limitation 1.6. §X.B.3.a.vi, *supra.*

vii. **Limitation 19.7: "receive from the control server at least some of the first event information and at least some of the second event information; and"**

516. In my opinion, Herzog in view of Ellis and Spivey discloses this limitation. This limitation is substantially the same as the '687's limitation 1.7, except that the socket server in limitation 19.7 receives first and second event information from the control server. Ex.1003, Claims 1, 19. Herzog in view of Ellis and Spivey discloses a system where real-time data from multiple live events is transferred to the MQSD. §X.B.3.a, *supra*. Thus, a POSA would have understood that Ellis discloses this limitation. §X.B.3.a.vii, *supra.*

viii. **Limitations 19.8 and 19.9: "transmit the at least some of the first event information to the first viewer client device of the first plurality of viewer client devices via a third Internet communication channel between at least one first event socket of the at least one socket server and the first viewer client device of the first plurality of viewer devices; and transmit the at least some of the second event information to the first viewer client device of the second plurality of viewer client devices via a fourth Internet communication channel between at least one second event socket of the at least one socket server and the first viewer client device of the second plurality of viewer devices."**

517. In my opinion, Herzog in view of Ellis and Spivey discloses these limitations. These limitations are substantially the same as the '687's limitations 1.8

and 2.2 except that there is (1) a different name for the communication channel and (2) a second live event. Ex.1003, Claims 4, 19. The different channel name alters nothing. §X.B.3.j.iv, *supra.* Herzog in view of Ellis and Spivey renders obvious a system of providing real-time data from multiple live games to multiple groups of users over separate (third/fourth and so on and so forth) internet connection feeds. §§X.B.3.a, X.B.3.b. Here, the connections are listed as third/fourth connections because the first/second connections are related to the video feed connections. Thus, a POSA would have understood that Herzog in view of Ellis and Spivey discloses these limitations for the same reasons as stated above. §§X.B.3.a.viii, X.B.3.b.iii, *supra.*

k. Dependent Claim 20

i. **Limitations 20.0-20.6: "The system of claim 19, wherein: in A), the plurality of media sources: provide a second copy of the first plurality of copies to a second viewer client device of the first plurality of viewer client devices via a third video Internet communication channel between the plurality of media sources and the second viewer client device of the first plurality of viewer client devices; and**
provide a second copy of the second plurality of copies to a second viewer client device of the second plurality of viewer client devices via a fourth video Internet communication channel between the plurality of media sources and the second viewer client device of the second plurality of viewer client devices; and
in C), the at least one socket server:
transmits at least the first event information to

the second viewer client device of the first plurality of viewer client devices via a third event information Internet communication channel between the at least one first event socket of the at least one socket server and the second viewer client device of the first plurality of viewer devices; and
transmits at least the second event information to the second viewer client device of the second plurality of viewer client devices via a fourth event information Internet communication channel between the at least one second event socket of the at least one socket server and the second viewer client device of the second plurality of viewer devices."

518. In my opinion, Herzog in view of Ellis and Spivey discloses these limitations. *See* Claim 4, 19. §§X.B.3.d, X.B.3.j, *supra.* These limitations are substantially the same as limitations 4.0-4.6, and 19.1, 19.3, 19.4, 19.6, and 19.8 and 19.9, except that in limitation 20.6, the second VCD is receiving event information from a second live sporting event, rather than from the first live event. Herzog in view of Ellis and Spivey renders obvious a system of providing real-time data from multiple live games to multiple groups of users over separate internet connection feeds (third/fourth channels). §§X.B.3.a, X.B.3.b, *supra*. Thus, a POSA would have understood that Herzog in view of Ellis and Spivey discloses these limitations for the same reasons as stated above. §X.B.3.d, *supra*.

l. Dependent Claim 21

i. Limitations 21.0-21.2: "The system of claim 19, wherein in C), the at least one socket server further: transmits and receives first chat information regarding the first live stream of digital content via at least one first chat/system event Internet communication channel between at least one first chat/system event socket of the at least one socket server and the first viewer client device of the first plurality of viewer client devices, wherein the at least one first chat/system event socket corresponds to the first chat information; and transmits and receives second chat information regarding the second live stream of digital content via at least one second chat/system event Internet communication channel between at least one second chat/system event socket of the at least one socket server and the first viewer client device of the second plurality of viewer client devices, wherein the at least one second chat/system event socket corresponds to the second chat information."

519. In my opinion, Herzog in view of Ellis and Spivey discloses these limitations. *See* Claim 5, 19. §§X.B.3.e, X.B.3.j. The limitations are substantially the same as limitations 5.0-5.2 except that in claim 21, the second VCD is receiving chat information about a second live sporting event, rather than about the first live event. Ex.1003, Claims 5, 21. Herzog in view of Ellis and Spivey renders obvious a system of providing chat data from multiple live games to multiple groups of users over separate internet connection feeds. §§X.B.3.a, X.B.3.e, *supra*. Thus, a POSA

would have understood that Herzog in view of Ellis and Spivey renders these limitations obvious for the same reasons as stated above. §X.B.3.e, *supra*.

m. Dependent Claim 22

i. **Limitation 22.0: "The system of claim 21, wherein:"**

520. In my opinion, Herzog in view of Ellis and Spivey discloses these limitations. *See* Claim 21. §X.B.3.l, *supra*.

ii. **Limitations 22.1-22.5, 22.7: "in A), the plurality of media sources: provide a second copy of the first plurality of copies to a second viewer client device of the first plurality of viewer client devices via a third video Internet communication channel between the plurality of media sources and the second viewer client device of the first plurality of viewer client devices; and**
provide a second copy of the second plurality of copies to a second viewer client device of the second plurality of viewer client devices via a fourth video Internet communication channel between the plurality of media sources and the second viewer client device of the second plurality of viewer client devices; and
in C), the at least one socket server:
transmits at least the first event information of the first event information to the second viewer client device of the first plurality of viewer client devices via a third event information Internet communication channel between the at least one first event socket of the at least one socket server and the second viewer client device of the first plurality of viewer devices;
transmits at least the second event information of the second event information to the second

viewer client device of the second plurality of viewer client devices via a fourth event information Internet communication channel between the at least one second event socket of the at least one socket server and the second viewer client device of the second plurality of viewer devices; and"

521. In my opinion, Herzog in view of Ellis and Spivey renders these limitations obvious. These limitations are substantially the same as limitations 20.1-20.6 except that limitations 22.5 and 22.7 contain a repeated phrase which does not change the meaning of the limitations. Ex.1003, Claims 20 ("[T]ransmits at least the second event information to …."), 22 ("[T]ransmits at least the second event information of the second event information to…"). Thus, a POSA would have understood that Ellis in view of Spivey discloses these limitations for the same reasons as stated above. §X.B.3.k, *supra*.

iii. **Limitations 22.6 and 22.8: "transmits and receives the first chat information regarding the first live sporting event video-based commentary included in the first live stream of digital content via at least one third chat/system event Internet communication channel between the at least one first chat/system event socket of the at least one socket server and the second viewer client device of the first plurality of viewer client devices; transmits and receives the second chat information regarding the second live sporting event video-based commentary included in the second live stream of digital content via at least one fourth chat/system event Internet communication channel between the at least one second chat/system event socket of the**

at least one socket server and the second viewer client device of the second plurality of viewer client devices."

522. In my opinion, Herzog in view of Ellis and Spivey renders these limitations obvious. These limitations are substantially the same as limitations 21.1 and 21.2. Ex.1003, Claims 7, 22. But these limitations further require that the first/second chat information is sent to a second VCD of the first/second plurality of VCDs over a separate channel. *Id.* Providing chat information about multiple live sporting events is disclosed above. §X.B.3.l, *supra*. Providing chat information to more than one user device of each plurality of user devices over a separate channel (third/fourth) is also discussed above, in claim 7 and 5. Further, providing event information to a second user device is contained in limitation 20.5 and 20.6. Thus, a POSA would have understood that Herzog in view of Ellis and Spivey provides the chat information to a second user of the first and second plurality of VCDs.

523. The slight difference in word choice between claim 21 and 22, *e.g.*, "first live sporting event video-based commentary" versus "first live stream of digital content," does not change the meaning of the claim, as this claim depends on claim 21, and the first chat and second chat information is already defined therein. Thus, a POSA would have understood that Herzog in view of Ellis and Spivey discloses these limitations for the same reasons as stated above. §X.B.3.g.vi, *supra*.

n. Independent Claim 23

i. **Limitation 23.0: "A method for providing, to a first viewer client device, a first copy of a first live stream of digital content relating to a first live sporting event, the method comprising:"**

524. In my opinion, Herzog in view of Ellis and Spivey renders this limitation obvious. This limitation is substantially the same as limitation 1.0 and 19.0. Claim 23 is a method claim implementing the system of Claim 1 and 19. Thus, a POSA would have understood that Herzog in view of Ellis and Spivey discloses this limitation for the same reasons stated above. §X.B.3.a.i, *supra*.

ii. **Limitation 23.1: "A) providing the first copy to the first viewer client device via a first video communication channel between at least one media source and the first viewer client device;"**

525. In my opinion, Herzog in view of Ellis and Spivey renders this limitation obvious. This limitation is substantially the same as limitation 1.3 and 19.3. The claim language is slightly altered, but the claims contain the same limitations. Thus, a POSA would have understood that Herzog in view of Ellis and Spivey renders this limitation obvious for the same reasons stated above. §§X.B.3.a.ii-iv, *supra*.

iii. **Limitation 23.2: "B) retrieving, via the Internet, first event information germane to the first live sporting event; and"**

526. In my opinion, Herzog in view of Ellis and Spivey renders this limitation obvious. This limitation is substantially the same as limitation 1.5 and 19.5. The claim language is slightly altered, but the claims contain the same

limitations. Thus, a POSA would have understood that Herzog in view of Ellis and Spivey renders this limitation obvious for the same reasons stated above. §X.B.3.a.v, *supra*.

iv. **Limitation 23.3: "C) transmitting the first event information to at least the first viewer client device via a first event information communication channel between at least one first event socket of at least one socket server and the first viewer client device, wherein the at least one first event socket corresponds to the first event information germane to the first live sporting event."**

527. In my opinion, Herzog in view of Ellis and Spivey discloses this limitation because the limitation is substantially the same as limitation 1.8 and 19.8. The claim language is slightly altered, but the claims contain the same elements. Thus, a POSA would have understood that Herzog in view of Ellis and Spivey discloses this limitation for the same reasons stated above. §§X.B.3.a.vi-viii, *supra*.

o. Dependent Claim 24

i. **Limitation 24.0: "The method of claim 23, further comprising:"**

528. In my opinion, Herzog in view of Ellis and Spivey discloses this limitation. *See* Claim 23. §X.B.3.n, *supra*.

ii. **Limitation 24.1: "D) transmitting and receiving first chat information regarding the first live sporting event via at least one first chat/system event Internet communication channel between at least one first chat/system event socket of the at least one socket server and the first viewer**

client device, wherein the at least one first chat/system event socket corresponds to the first chat information."

529. In my opinion, Herzog in view of Ellis and Spivey discloses this limitation. This limitation is substantially the same as limitation 5.1 and 21.1. The claim language is slightly altered, but the claims contain the same limitations. Thus, a POSA would have understood that Herzog in view of Ellis and Spivey discloses this limitation for the same reasons stated above. §§X.B.3.e.ii, *supra*.

p. Dependent Claim 25

i. **Limitation 25.0: "The method of claim 23, wherein B) comprises:"**

530. In my opinion, Herzog in view of Ellis and Spivey discloses this limitation. *See* Claim 23. §X.B.3.n, *supra*.

ii. **Limitation 25.1: "B1) periodically updating the first event information; and"**

531. In my opinion, Herzog discloses this limitation. *See* Claims 8-9, §§X.B.3.h, X.B.3.i, *supra*. Herzog discloses a control server (ERP Server) periodically retrieving real-time information from the event information provider (ERP Gen Server) that includes event information over the internet. *See* Ex.1015 ¶48-50; *see also*, Ex.1017 ¶48 (disclosing a score, play, error, and at-bat updates); §§X.B.3.a.v, *supra*. The only remaining portion of this limitation is that the system needs to "update the first event information." Ex.1003, claim 25.

532. Herzog in view of Ellis and Spivey discloses the remaining portion. Herzog and Spivey both disclose a memory system, including a database, communicatively coupled to the ERP server (control server). Herzog explains that first the meta-data (event information) is "sent to the ERP server." Ex.1015 ¶67. Second, the client requests and "receives the HLS video." *Id.* ¶73. Third, a "user initiates a request for meta-data that is associated with the VITC time stamp of a particular video channel on the display of the video player." *Id.* ¶74. Only then, does Herzog's ERP Server in "response to the request" for meta-data "transmit[] the meta-data with a corresponding .JSON time stamp of the live event." *Id.* ¶¶74-76. Thus, Herzog's ERP server updates the meta-data in its database and stores it until a user requests the data. *Id.* ¶¶67-77. Thus, Herzog discloses these limitations.

iii. **Limitation 25.2: "B2) for each updating of the first event information, queueing an asynchronous message including the updated first event information for transmission to the at least one first event socket of the at least one socket server."**

533. In my opinion, Herzog in view of Ellis and Spivey discloses this limitation. The term "asynchronous message" is only used in the '687's claims. *See* Ex.1003, Claim 9. But the '687 does discuss an "asynchronous queue" as a set of "tasks to process" that can either be small "(e.g., at any given second it may be between 0-10 items)" but can "grow to a larger size (e.g., 1000 items)." *Id.,* 47:66-48:9. Thus, a POSA would have understood that this limitation requires that for

each first event information update at the control server, the control server readies a delayed message including the first event information, that will be processed and sent to the socket server's first event socket in turn. As earlier noted, transmission through a socket is obvious at a minimum as in Internet communication, a socket is defined by a transport layer port number and a network layer IP address.

534. In the same way, Herzog's ERP server delays updates to the Origin (socket) server. For example, the ERP server receives all the meta-data from the ERP generator server. *See* Ex.1015 ¶50. The ERP server cannot stream all the retrieved data to the origin server, however, because some of the meta-data is sensitive competition data, e.g., tire pressure. *Id.*; *see* Claim 9, *supra.* Thus, the ERP server must first "filter and eliminate contents of meta-data." *Id.* Only afterwards, can the ERP server provide the delayed information update to the origin server, i.e., the socket server. *Id.* Thus, a POSA would have understood that this meta-data (event information) update is an asynchronous message that includes the updated meta-data that is transmitted to the origin server (first event socket).

q. Independent Claim 27

i. Limitation 27.0: "A system for providing, to a first viewer client device, a first copy of a first live stream of digital content relating to a first live sporting event, the system comprising:"

535. In my opinion, Herzog discloses this limitation. *See* Limitation 1.0 and 19.0. §X.B.3.a.i, *supra.*

ii. **Limitation 27.1: "means for providing the first copy to the first viewer client device via a first video communication channel;"**

536. In my opinion, Herzog discloses this limitation. *See* Limitations 1.1-1.4 and 19.1-19.4. §§X.B.3.a.ii-iv, *supra*. Herzog also discloses an algorithm for providing a first copy to a first VCD a first live stream of digital content relating to a first live sporting event. Ex.1015 ¶¶69-73.

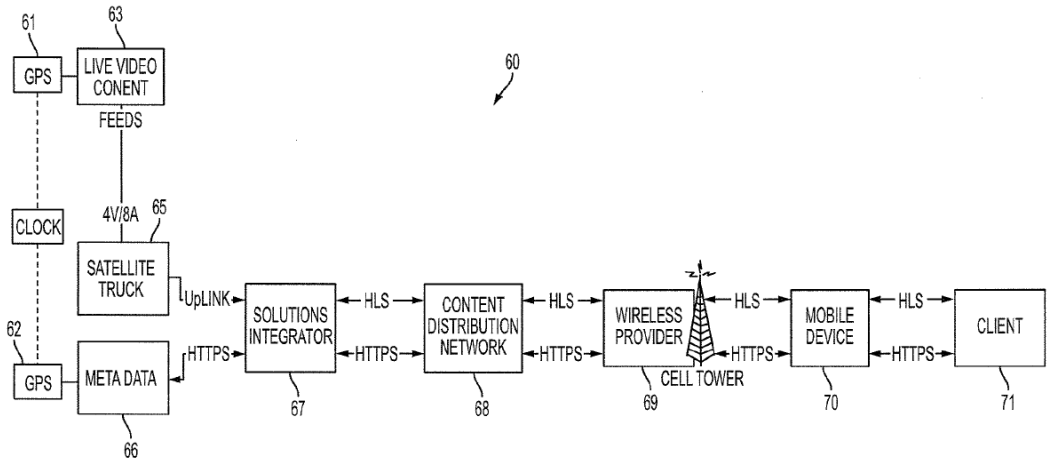

FIG. 5

Ex.1015, Fig. 5.

iii. **Limitations 27.2 and 27.3: "means for retrieving, via the Internet, first event information germane to a first live sporting event; and means for transmitting the first event information to at least the first viewer client device via a first event information communication channel that is different from the first video communication channel."**

537. In my opinion, Herzog in view of Ellis and Spivey discloses these limitations. *See* Limitations 1.5-1.8 and 19.6. §§X.B.3.a.v-viii, *supra*. Herzog in

view of Ellis and Spivey also discloses an algorithm for retrieving and transmitting to a first VCD, via the Internet and a first event information communication channel different than a video communication channel, first event information germane to a first live sporting event. Ex.1015 ¶¶69-77, Fig. 5; Ex.1017, Figs. 12-13; Ex.1016, Figs. 30, 32.

r. Dependent Claim 28

i. Limitation 28.0: "The system of claim 27, further comprising:"

538. In my opinion, Herzog in view of Ellis and Spivey discloses these limitations. *See* Claim 27. §570, *supra*.

ii. Limitation 28.1: "means for transmitting and receiving first chat information regarding the first live sporting event via at least one first chat/system event Internet communication channel that is different from the first video communication channel and the first event information communication channel."

539. In my opinion, Herzog in view of Ellis and Spivey discloses these limitations. *See* Claim 5, 21. §X.B.3.e, *supra*. Herzog in view of Ellis discloses an algorithm where the chat/system Internet communication channel is different from the video communication channel and the first event information channel. *See* Ex.1015 ¶¶69-77, Fig. 5; Ex.1017, Figs. 12-13; Ex.1016, Figs. 30, 32.

s. Dependent Claim 29

i. Limitation 29.0: "The system of claim 27, wherein the means for retrieving includes

means for updating the first event information and queueing an asynchronous message including the updated first event information for transmission on the first event information communication channel."

540. In my opinion, Herzog in view of Ellis and Spivey discloses these limitations. *See* Claims 9, 25, 27. §§X.B.3.i, X.B.3.p, X.B.3.q, *supra.*

t. Dependent Claim 30

i. **Limitation 30.0: "The system of claim 27, wherein the means for providing the first copy to the first viewer client device via a first video communication channel comprises:"**

541. In my opinion, Herzog in view of Ellis and Spivey discloses this limitation. *See* Claim 27. §X.B.3.q, *supra.*

ii. **Limitation 30.1: "an HTTP live streaming (HLS) mother server to receive a first HLS file suite representing the first live stream of digital content; and"**

542. In my opinion, Herzog discloses this limitation. This limitation is fully disclosed by Herzog through its use of HLS. First, Herzog discloses an HLS file suite representing the first live stream of digital content because it streams the live event's "video/audio stream in an HTTPS Live Streaming (HLS)-based media streaming communications protocol." Ex.1015 ¶¶51, 55 ("The encoded video is then published to the content delivery network 47 (for example) via IP utilizing the HLS … techniques …."). Second, Herzog discloses a mother server because the system contemplates publishing the video streams from the Encoders, in HLS format, to the

content delivery network 47 (mother server), which can be a "server" "implemented using one or more hardware platforms intended to represent a general class of data processing device … with an appropriate network connection." Ex.1015 ¶¶49-51, 83. Thus, a POSA would have understood that Herzog's content delivery contains an HLS mother server that is revieing a first HLS file suite that represents the first live stream of digital content.

iii. **Limitation 30.2: "a plurality of HLS child servers, communicatively coupled to the HLS mother server and an HLS content delivery network (HLS CDN), to provide the first copy to the first viewer client device via the first video communication channel between the HLS CDN and the first viewer client device, wherein the first copy is based on the first HLS file suite received by the HLS mother server."**

543. In my opinion, Herzog discloses a generic server and system that streams copies of an HLS file suite to user devices over a communication channel between the CDN and user device. §§X.B.3.a, X.B.3.t.ii, *supra.* Moreover, Herzog discloses transferring these HLS streams to "other servers that are physically located closer to end users requesting the data in a network communications system," i.e., child server. Ex.1015 ¶51. Further, Herzog discloses an entire "content delivery network" that "broadcast[s]" sporting events. *Id.* ¶¶43, 83. Necessarily, such a system would utilize a conventional CDN, as recognized in the '687. Ex.1003, 39:60-40:10. Thus, a POSA would have understood Herzog discloses this limitation.

C. The ’697

1. ’697 Ground 1A: Claims 1, 7-9, 19-25, 27-30 Are Obvious Over Ellis in View of Spivey

544. For the reasons stated in Sections IX.A above, it is my opinion that a POSA would have been motivated to combine the teachings of Ellis and Spivey with a reasonable expectation of success to arrive at the claimed invention.

a. Independent Claim 1

i. Limitation 1.0: “A system for providing a first plurality of copies of a first broadcaster's live stream of digital content including first live sporting event video-based commentary from a first broadcaster client device to a first plurality of viewer client devices, and for providing a second plurality of copies of a second broadcaster's live stream of digital content including second live sporting event video-based commentary from a second broadcaster client device to a second plurality of viewer client devices, the system comprising:”

545. To the extent the preamble is limiting, it is my opinion that Ellis discloses this limitation. *See* Ex.1016, Abstract. Ellis discloses a system for providing a first/second plurality of copies of a first/second broadcaster’s live stream of digital content including first/second live sporting event video-based commentary from a first/second broadcaster client device to a first/second plurality of VCDs by providing “enhanced information access and viewing functionality for sports-related programming,” which includes “a sporting event, sports news, or sports

commentary." *Id.* ¶¶8, 11. Figure 2B, below, shows live sporting events available at the same time to any number of users.

220

Tuner (222)	Primary Source ID (224)
1	<sourceid_2>
2	<sourceid_1>
3	<sourceid_8>
4	<sourceid_4>

230

Source ID (232)	Type (234)	Profile Score (236)
<sourceid_1>	Game	90
<sourceid_2>	Game	95
<sourceid_3>	Commentary	45
<sourceid_4>	News	75
<sourceid_5>	Movie	25
<sourceid_6>	Movie	35
<sourceid_7>	Highlights	65
<sourceid_8>	Game	80

Id. ¶¶62-63, Fig. 2B (showing multiple live broadcasts available). Ellis discloses a system that provides the "media content" from those sporting events "to user equipment 102." *Id.* ¶40. Media content includes broadcast programming "and any other content capable of being displayed by, presented to, … or interacted with, using user equipment 102." *Id.* It is my opinion that broadcasts of live events would obviously, if not inherently, include video-based commentary.

546. Ellis further discloses multiple broadcasters providing copies of each broadcaster's live stream of digital content including live sporting event video-based commentary to a plurality of user devices by providing a broadcast system where any "number of users" may receive signals from a content source. Ex.1016 ¶39. The signals are individual copies of the same live stream of digital content. *Id.* ¶¶40, 62, Fig. 2B. For example, Ellis's system broadcasts digital streams from the content source, which can be an "[i]nternet or network media/webserver." Ex.1016 ¶40.

Users can select which content to receive, as shown in Figure 2. *Id.* ¶62. Ellis then sends an individual copy of the live event to the users over a communication path. *Id.* ¶45. The communication path can be any "suitable wired or wireless path." *Id.* "For IPTV," content may be "delivered on a particular network address (e.g., multicast address) on which an IP socket is currently joined." *Id.* ¶74. In my opinion, a POSA would have understood this distribution system provides for a plurality of broadcaster devices, a plurality of copies of multiple broadcaster's live stream of digital content to a plurality of viewers.

ii. **Limitation 1.1: "A) a plurality of media sources to:"**

547. In my opinion, Ellis discloses content sources, which are "any suitable source of media content" such as a "Internet or network media/web server, or any other suitable facility or system for originating or distributing passive or interactive content to user equipment." Ex.1016 ¶40. Ellis's content sources serve to receive the first/second broadcaster's live stream of digital content and distribute video content to users via communications paths. *See id.* ¶¶39-41, 45, 47. Figure 1 shows a content source distributing video content to users over communication path 150:

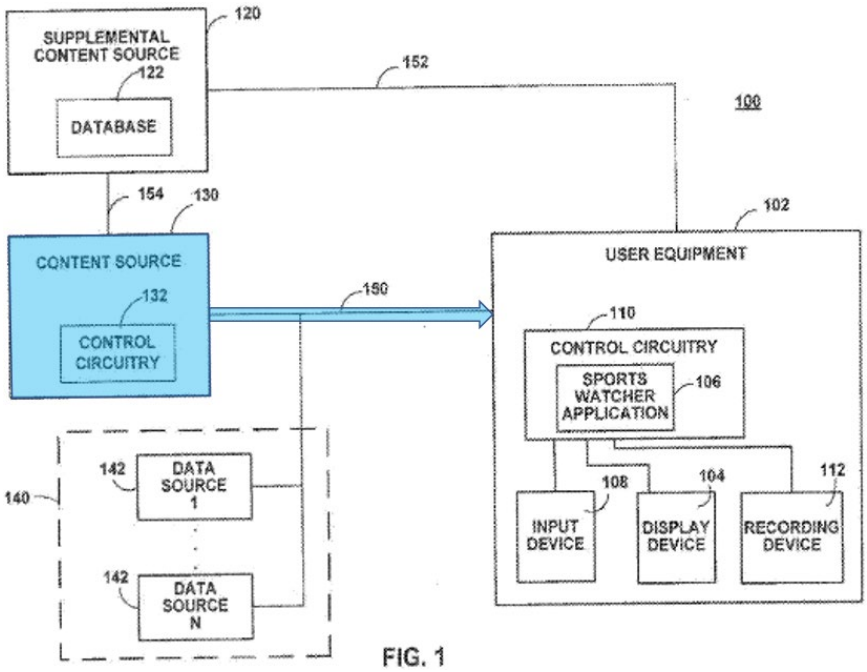

FIG. 1

Ex.1016 ¶¶39-41, Fig. 1 (annotated). In my opinion, Ellis also discloses multiple content sources, *i.e.*, a plurality. *Id.* ¶39 ("[T]here may be numerous instances of content source 130 …"). Moreover, as explained below, it is my opinion that Ellis's content sources perform the same functions as the media sources as recited in limitations 1.2-1.4. Thus, Ellis discloses the recited limitation.

iii. **Limitation 1.2: "receive the first broadcaster's live stream of digital content and the second broadcaster's live stream of digital content;"**

548. In my opinion, Ellis discloses that the content source "may be any suitable source of media content, such as, for example a cable system headend, satellite television distribution facility, television broadcast facility … Internet or network media/web server, or any other suitable facility or system for … distributing … content to user equipment 102." *Id.* ¶40. The content sources "provide multiple

streams of digital content," including "broadcast programming" and live sporting events. *Id.* ¶¶40, 45, 74. Ellis further discloses that a user may "actively watch one or more sporting events," and the user "may change or swap primary and/or secondary sporting events at any time." *Id.* ¶¶61-62. Thus, in my opinion Ellis discloses content sources that receive multiple broadcaster's live streams of digital content and distribute that content to user equipment.

iv. **Limitation 1.3 & 1.4: "provide a first copy of the first plurality of copies to a first viewer client device of the first plurality of viewer client devices via a first video Internet communication channel between the plurality of media sources and the first viewer client device of the first plurality of viewer client devices; and"**
"provide a first copy of the second plurality of copies to a first viewer client device of the second plurality of viewer client devices via a second video Internet communication channel between the plurality of media sources and the first viewer client device of the second plurality of viewer client devices;"

549. The '697's Figure 1A gives an example of the "first viewer client device [("VCD")] of the first plurality of viewer client devices." There, a first VCD means one user, 200A, of the first group that receives individual copies 202A, 202B of the first live stream of digital content 102A:

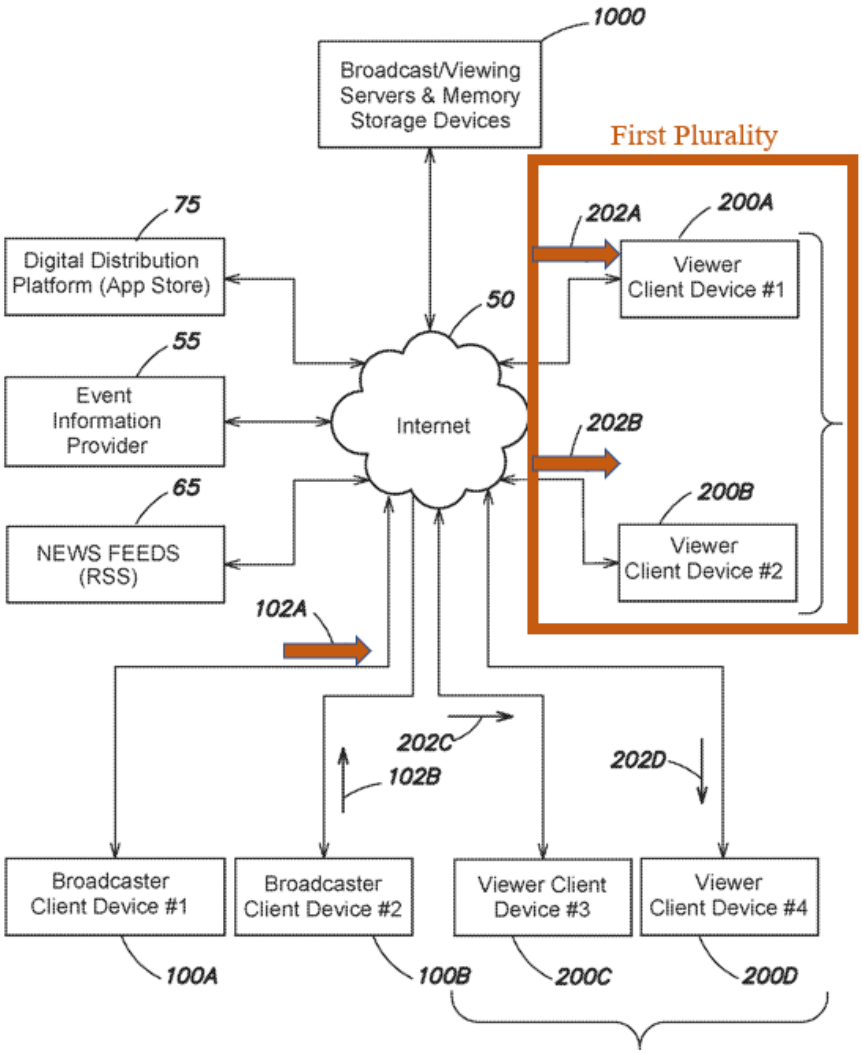

Ex.1006, 9:16-41, Fig. 1A (explaining that Figure 1A depicts providing "a first [VCD] (200A)" of "a first plurality of [VCDs] (200A, 200B)" that receive "copies (202A, 202B) of a first broadcaster's live stream of digital content (102A)."). Likewise, "the first viewer client device of the second plurality of viewer client devices" simply means one user of the second group of VCDs that receives individual copies of a second live stream of digital content:

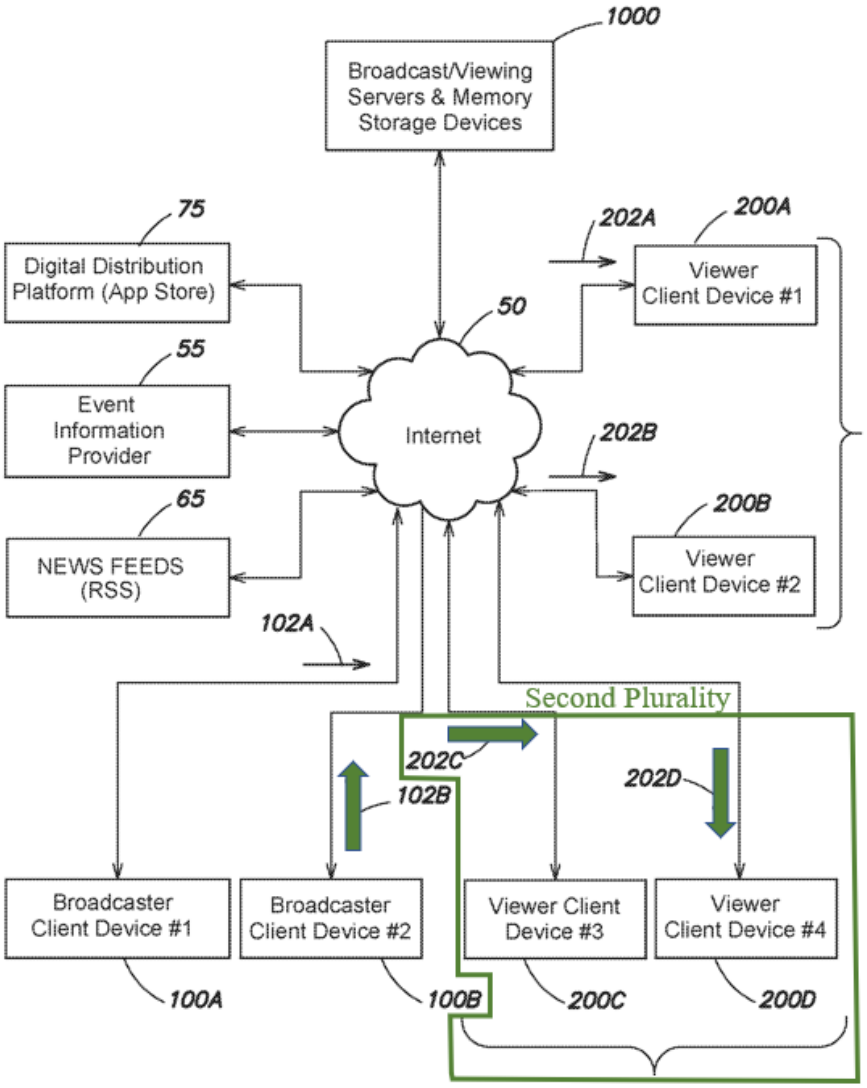

Id., 9:16-41 (explaining that "a first [VCD] (200C)" of "a second plurality of [VCDs] (200C, 200D)" receive "copies (202C, 202D) of a second broadcaster's live stream of digital content (102B)."), Fig. 1A.

550. In my opinion, Ellis discloses a first VCD of a first/second plurality of VCDs because Ellis discloses an "interactive media system" where "any suitable number of users" may "select any game from the listing" of "available games" to "watch the selected game." Ex.1016 ¶94. For example, a first user in a first group

of users (the first plurality) can choose to watch the Yankees broadcast from the YES network. *Id.* ¶55. Meanwhile, a first user of a second group of users can choose to watch a separate live stream of digital content, such as a different game or game commentary. Ex.1016 ¶¶61-62, 132, Fig. 2B. Thus, it is my opinion that Ellis discloses multiple first users of multiple different pluralities of VCDs.

551. Further, as shown in Figure 1 below, the '697's explains that the first copy of "the first plurality of copies" means a single copy provided to one VCD, where another VCD receives a separate copy over a separate connection:

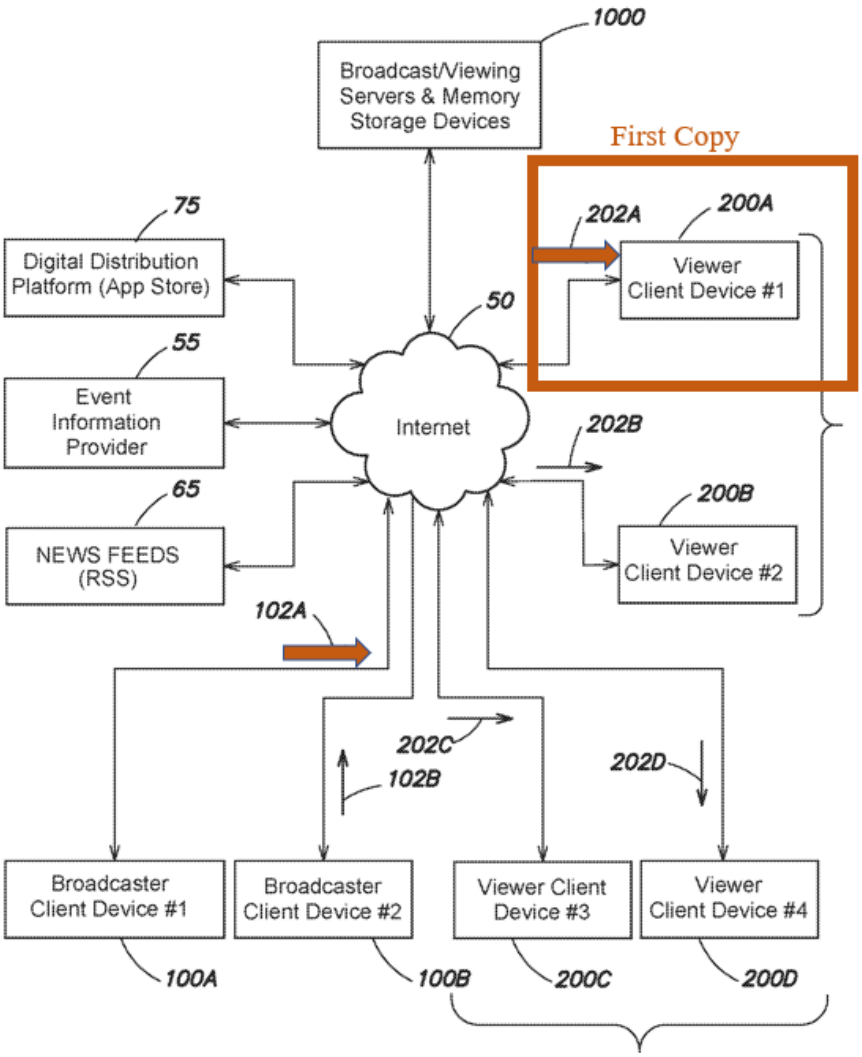

Ex.1006, 9:16-41 (explaining that VCD 200A receives a "first copy (202A)" of "a first plurality of copies (202A, 202B) of a first broadcaster's live stream of digital content (102A)"), Fig. 1. Likewise, the first copy of "the second plurality of copies" means a single copy provided to one VCD, where another VCD receives a separate copy over a separate connection:

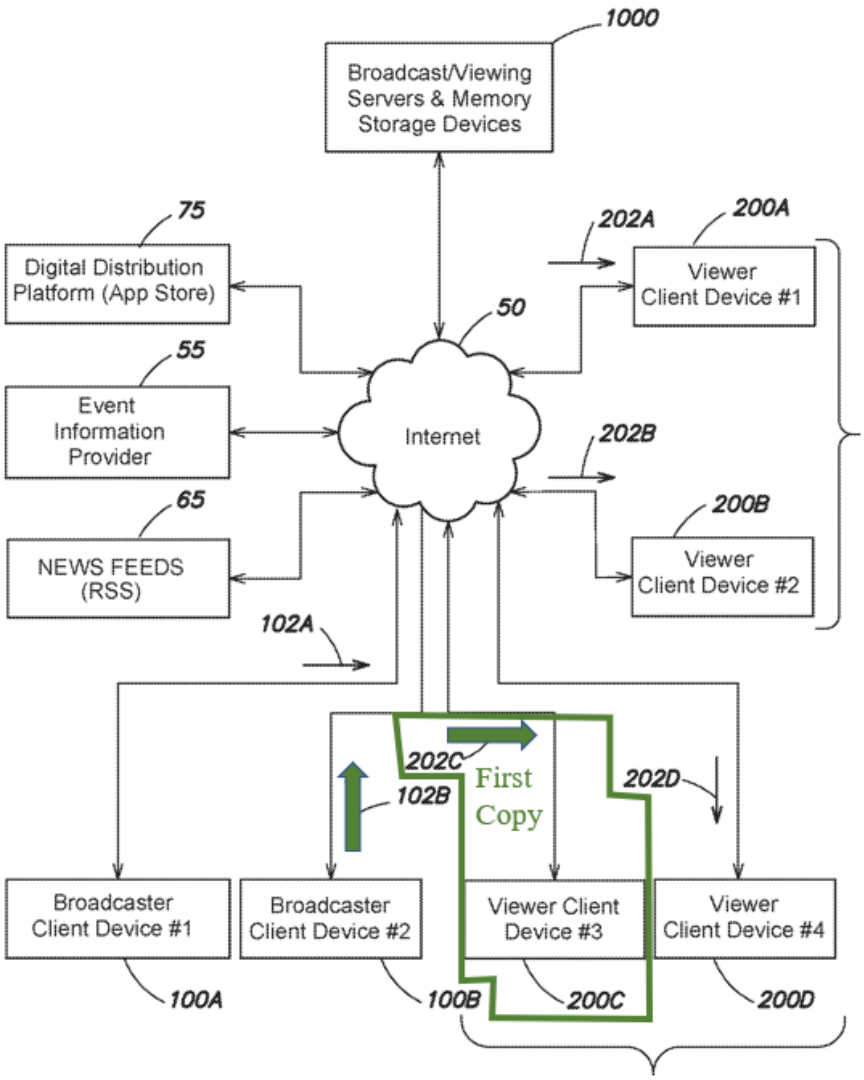

Id., 9:16-10:3 (noting that the system provides "a first copy (202C)" of "a second plurality of copies (202C, 202D) of a second broadcaster's live stream of digital content (102B)."), Fig. 1.

552. In my opinion, Ellis discloses a first copy of a first/second plurality of copies because Ellis discloses an "interactive media system" where "any suitable number of users" may "select any game from the listing" of "available games." Ex.1016 ¶¶39, 94. In other words, Ellis discloses a system that provides live streams

of digital content from multiple live games as individual copies. *Id.* ¶¶39, 61-62, Fig. 2B. Ellis's content source, an internet server, provides the live stream over a connection path, which can be any "suitable wired or wireless path" including an internet connection. Ex.1016 ¶¶39, 45. Thus, it is my opinion that each user would receive an individual copy of the live stream of digital content.

553. In my opinion, Ellis additionally discloses providing individual copies of multiple different live streams to multiple groups of client devices. §§X.B.1.a.iv(A)-(B), *supra*;. Ellis further discloses providing video content over a first/second video Internet communication channel. As an example of an "Internet communication channel," the '697 describes a "video" channel between a media server and a client device to convey video-based commentary. Ex.1006, 5:36-49. Ellis discloses providing video from a content source to user equipment, over a communication path. Ex.1016 ¶39. The content source can be an "internet or network media/web server" and the user equipment "may include computer equipment." *Id.* ¶¶40, 48. The communication path can be "for example, a satellite path, a fiber-optic path, a cable path, or any other suitable wired or wireless path." *Id.* ¶45. Ellis describes the communication path as a unique internet connection between the content source and the user equipment that provides a video live stream: "[f]or IPTV, tuned content may include content to be delivered on a particular network address (e.g., multicast address) on which an IP socket is currently joined."

Id. ¶74. Thus, in my opinion Ellis discloses that each user receives a copy from the content source over a video internet communication channel/path that is unique to each user device. *Id*.

v. **Limitation 1.5: "B) a control server to periodically retrieve, via the Internet and from an event information provider, first event information germane to a first live sporting event, wherein the first event information includes first score information for the first live sporting event; and"**

554. In my opinion, Ellis and Spivey both disclose this limitation. The '697 explains that the control server is a generic server comprising one or more processors, memory devices, and communication interfaces. Ex.1006, 55:60-6:3. The control server retrieves "event information" from an "event information provider." *Id.*, 21:37-42. The control server then transmits the event information to the socket server. *Id.*, 19:41-45, 21:37-48. The event information is "germane to" a particular "live sporting event," *e.g.*, score information of one of the broadcaster's live streams of digital content. *Id.*, 19:27-37, 21:37-42. Further, the control server may "store at least some portion of retrieved event information." *Id.,* 45:20-48.

555. In my opinion, Ellis's SCS comprises one or more processors, memory devices, and communication interfaces. The SCS can be "any suitable content source configured to provide real-time sports scores and game summary information" including a "content manager, content aggregator, or intermediate

content provider." Ex.1016 ¶¶41, 42, 142. The SCS periodically retrieves, via the internet and from an event information provider, first event information germane to the first/second live sporting events, including first/second score information for the first live sporting event because the SCS may "provide real-time sports scores and game summary information, … spread and wagering data, and any other sports-related information to user equipment 102." *Id.* ¶41; *see id.* ¶¶72, 117. In my opinion, a POSA would have understood that this information is retrieved via the internet because that is how real-time data was transferred to users at the time of Ellis and Spivey—including score updates and wagering information. *See* Ex.1016 ¶¶42, 142. While a periodic time interval is not mentioned in Ellis, it is my opinion that a POSA would have understood that any system that provides real-time sports statistics, such as Ellis, would necessarily update the statistics on a periodic basis. Alternatively, it would have been an obvious design choice to use a periodic update to limit queries to the system and load on the components.

556. Further, as depicted in Figure 1, the SCS may store the received "sports-related information … in database 122:"

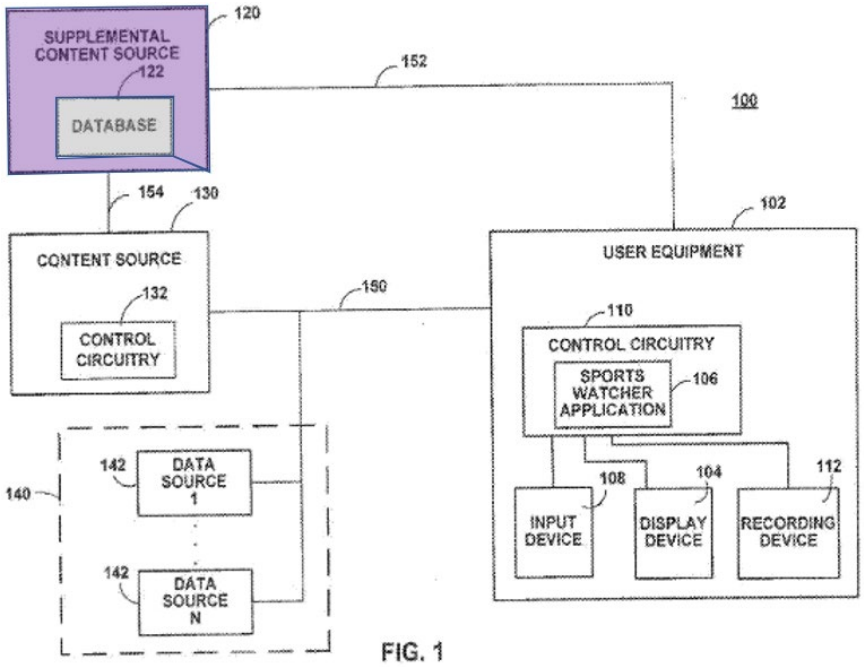

FIG. 1

Ex.1016 ¶42, Fig. 1. To the extent Ellis does not expressly disclose or render obvious this limitation, it is my opinion that Spivey's live data server device ("LDSD"), as shown in Figure 4, contains the same basic components as the '697's control server:

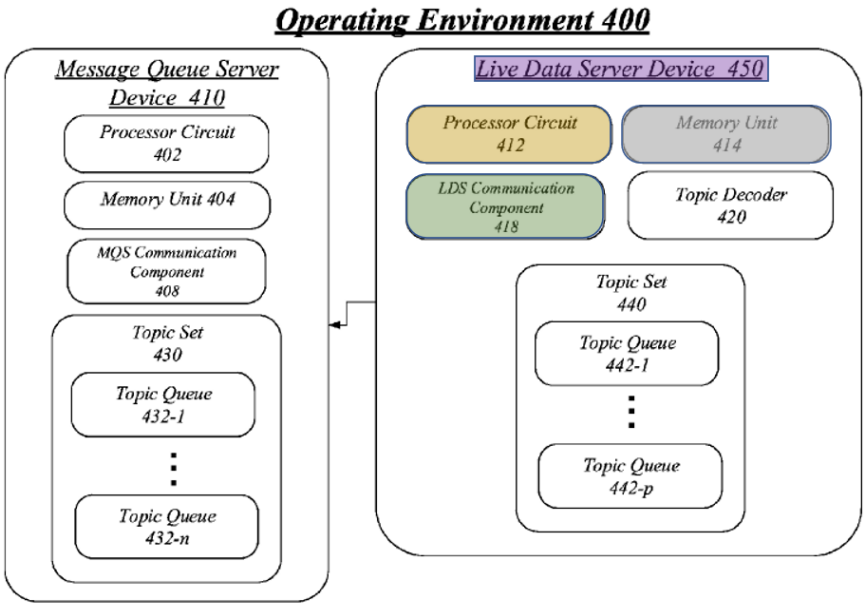

FIG. 4

Ex.1017, Fig. 4. The LDSD is a generic server comprising one or more processors, memory devices, and communication interfaces. *Id.* Moreover, it is my opinion that the LDSD performs the same functions as the '697's control server. The LDSD contains an LDS communication component that allows LDSD "to receive live data and transmit the data payloads to MQS device 410." Ex.1017 ¶55. The live data received by the LDSD includes "sports scores and breaking news" and when related to baseball can include "a score, a play, an error, an injury, a player-at-bat, and so forth." *See id.* ¶¶27, 48, 66 ("A data payload may include … information about the live event in progress, such as a score, a name of the player that scored or made a play, an injury, a penalty, an error, a new record set, and so forth."). The LDSD retrieves the first event information germane to a first/second live sporting event including the first/second score information for the first/second live sporting event via the internet and from an event information provider because the live data sources are associated with the live event, and servers in Spivey communicate over the internet. Ex.1017 ¶¶35, 37, 178. Thus, it is my opinion that a POSA would have understood that Ellis and Spivey both disclose this limitation. To the extent that Ellis's SCS did not meet this claim limitation, I believe that a POSA would have replaced Ellis's SCS with Spivey's LDSD and MQSD to decrease latency. §IX.A.1, *supra.*

vi. **Limitation 1.6: "C) at least one socket server communicatively coupled to the control server to:"**

557. In my opinion, Ellis in view of Spivey discloses a socket server communicatively coupled to the control server (which, as discussed above, is disclosed by Ellis's SCS and Spivey's LDSD). The '697 describes the socket server as a generic server. *See* Ex.1006, 55:60-6:3. The purpose of the socket server is to "facilitate communication" of "synchronized event information retrieved by the control server" associated with an event between the control server and the VCDs. *Id.*, 19:64-20:5. The socket server does so by using "one or more sockets … dedicated to the particular event" allowing VCDs "to establish an event information channel with the socket server." *Id.,* 20:5-11. The socket server then receives event information transferred from the control server and shares the event information in "event messages" via the event information channel "in a synchronized manner" to all viewers "following the particular event." *Id.* Ellis discloses providing event information over a separate connection to user equipment. Ex.1016 ¶¶39-41, Fig. 1. Ellis also discloses a system where multiple servers provide the event information. Ex.1016 ¶47 (noting the SCS's functionality "may be … provided by multiple systems at multiple facilities").

558. In my opinion, a POSA would have looked to Spivey to add additional backend architecture to reduce latency in the real-time data delivery system. Like

the '697's socket server, Spivey's MQSD is a generic server that contains processors, memory, and communication components. Ex.1017 ¶¶35, 53, Figs. 3, 4. Moreover, it is my opinion that Spivey's MQSD carries out the same purpose as the '697's socket server. The MQSD "receive[s]" and "process[es] live data to provide live data" to "the subscribed connected client devices substantially simultaneously." *Id.* ¶¶36; *see id.* ¶¶45 ("[MQS] device 310 may be a representative example of message queue server 120"), 54 (describing that MQSD is "substantially similar" to "MQS device 310"), 96. To accomplish this, the MQSD receives live event data from the LDSD, which just "receive[d] live data:"

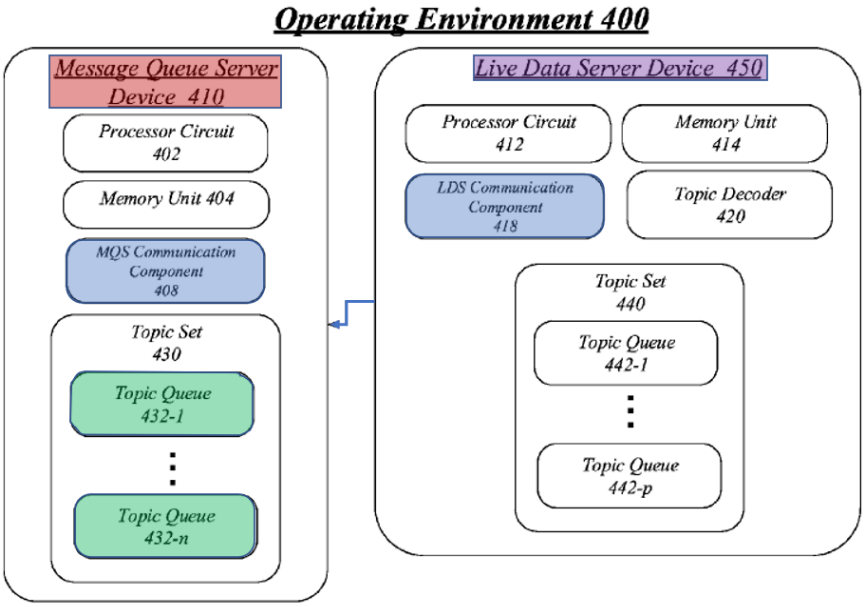

FIG. 4

Id. ¶55, Fig. 4. The MQSD is communicatively coupled to the LDSD through the MQS communication component and the LDS communication component. *Id.* ¶¶46 (disclosing that communication component 308 transmits and receives data), 54

(disclosing that communication component 408 is analogous to 308), 55 ("LDS communication component 418 … allows [LDSD] to … transmit the data payloads to [MQSD]."). Then, the MQSD organizes the received live data "into one or more of a plurality of topic queues" dedicated to storing information about "a specific game." *Id.* ¶¶47, 52. After sorting the data into topic queues, the MQSD shares the information "substantially simultaneously" to "the subscribed connected client devices." *See id.* ¶96. Thus, it is my opinion that a POSA would have understood Spivey's MQSD as disclosing the '697's socket server being communicatively coupled to a control server.

vii. **Limitation 1.7: "receive from the control server at least the first score information; and"**

559. In my opinion, Ellis in view of Spivey discloses this limitation. The LDSD (the control server) "receive[s] live data and transmit[s] the data payloads to [MQSD (the socket server)]." Ex.1017 ¶¶55. Data payloads may include "a score, a player name, a play, and so forth …."

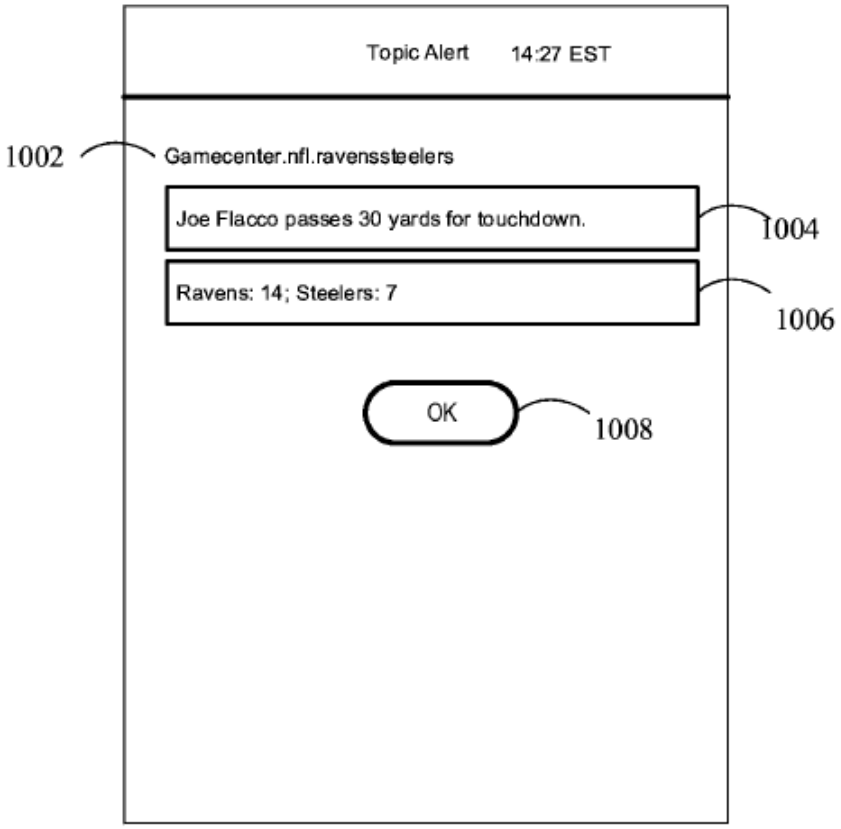

FIG. 10

Id. ¶117, Fig. 10. Thus, it is my opinion that a POSA would have understood that Spivey discloses a socket server receiving from the control server at least the first score information.

viii. **Limitation 1.8: "transmit the first score information to at least the first viewer client device of the first plurality of viewer client devices via a first event information Internet communication channel between at least one first event socket of the at least one socket server and the first viewer client device of the first plurality of viewer devices, wherein the at least one first event socket corresponds to the first event information germane to the first live sporting event."**

560. In my opinion, Ellis in view of Spivey discloses this limitation. This limitation requires (1) a first socket on the socket server that is specifically dedicated to storing information about the first live event, (2) a first viewer client device of a group of VCDs that are watching a live stream of the first live event, and (3) transmitting event data about the first live event from the first socket to the VCD using an internet connection. *See* Ex.1006, Claim 1. These features are shown in Figure 2:

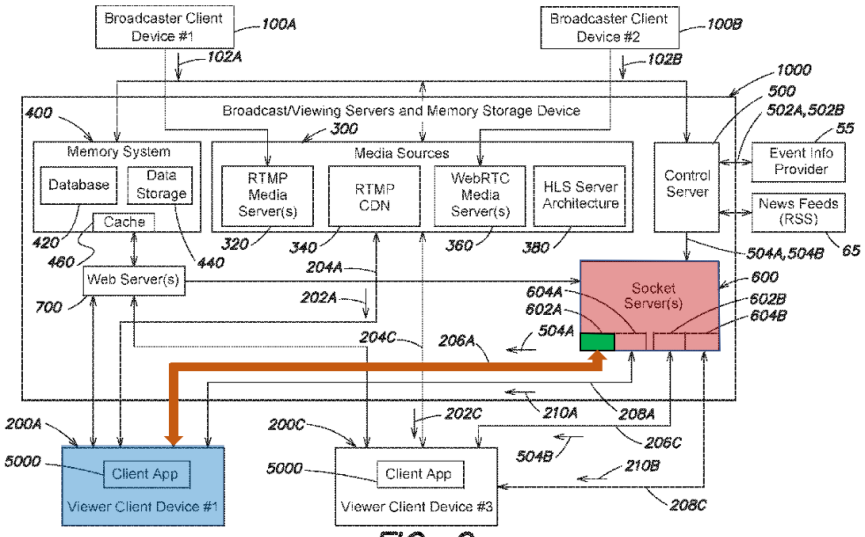

FIG. 2

Id., Fig. 2.

561. The '697 explains that the socket server contains "one or more first event sockets 602A dedicated to the first event information." Ex.1006, 21:48-52. The first event socket has a corresponding EventID that the VCD "uses … to connect to the [] socket," *e.g.*, by using a "URL including the … EventID in a path of the URL." *Id.,* 21:53-65. Thus, it is my opinion that a POSA would have understood a

"socket" to be a uniquely addressable communication endpoint on a server where first event information is provided to a VCD. *See* Ex.1006 at 20:45-61, 21:53-22:6).

562. Spivey often discusses a connection between the client device and the system using a live data access server ("LDAS"), however, Spivey also discloses that the message queue server device may be "accessible to clients over the network directly." Ex.1017 ¶36. For example, "MQS communication component 308 … may push data from topic queues 332-1, 332-n to the subscribers of the topics corresponding to those topic queues." *Id.* ¶46. Also, the system does not require an LDAS, only that it "may include a[n] [LDAS]." *Id.* ¶38. Thus, it is my opinion that a POSA would have understood Spivey to disclose a direct connection between the client devices and MQSD. In my opinion, a POSA would have used this implementation because reducing the amount of server transfers would reduce latency, which is Spivey's main purpose.

563. In my opinion, a first event socket corresponding to the first event information germane to the first live sporting event is simply a socket where information about one sporting event is provided to VCDs. *Id.* In the same way, Spivey's topic queues are "where data payloads are placed" that, for example, "relate to a specific game between two NFL teams." Ex.1017 ¶¶51-52. The data payloads, "[w]hen then live event is a sporting event," include, "for example, a score, a play, …, and so forth." *Id.* ¶48. Topic queues have a corresponding "topic label" which

is used "to identify a topic queue." *Id.* ¶49. "A topic label may be, for example" a "text string such as 'gamecenter.nfl.ravenssteelers.'" *Id.* ¶66.

564. Client devices use these topic label text strings to connect and subscribe to MQSD's topic queues. First, client devices "request a live data connection" with the MQSD by "select[ing] or enter[ing] the address or connection information to a particular" MQSD. *See id.* ¶¶81-82. This "address may resemble a uniform resource locator (URL)." *Id.* ¶82. Second, as shown in Figure 9, client devices can use the topic labels to select "the topics available from [MQSD] in a topic selection list" and "subscribe to" those topic queues:

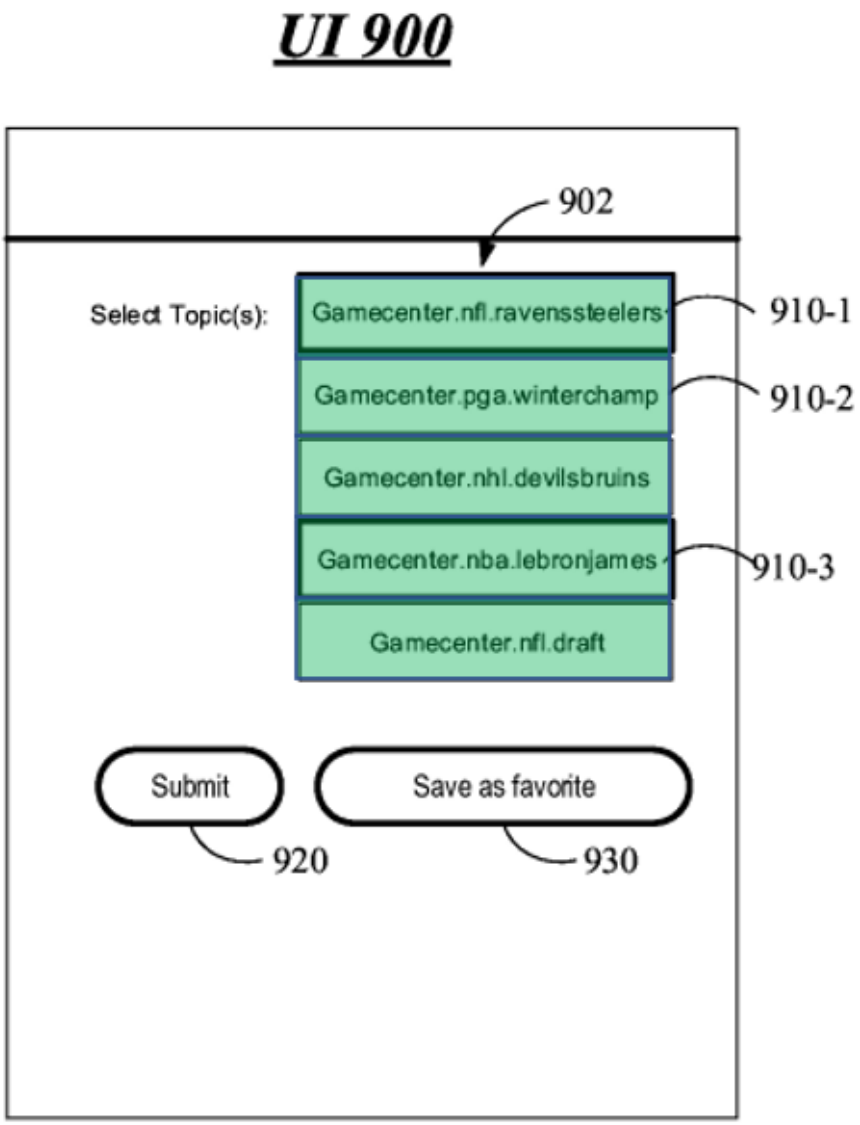

FIG. 9

Id. ¶¶83-84, Fig. 9. Third, "the data payload" may be pushed to the subscribed connected devices that requested that topic. *Id.* ¶96. Thus, it is my opinion that a POSA would have understood that Spivey's topic queues disclose the '697's first event sockets corresponding to the first event information germane to the first live sporting event.

565. In my opinion, Ellis further discloses a first VCD of the first plurality of VCDs. *See* §X.A.2.a.v, *supra.* Both Ellis and Spivey further disclose transmitting the first score information to the first/second VCD of the first plurality of VCDs. For example, in Spivey, the MQSD "may push data from topic queues … to the subscribers of the topics corresponding to those topic queues." Ex.1017 ¶46. In Ellis, SCS may be configured "to provide real-time sports scores and game summary information, … to user equipment 102." Ex.1016 ¶41. Thus, it is my opinion that Ellis and Spivey disclose the above limitation.

566. In my opinion, Ellis in view of Spivey additionally discloses providing first event information over a separate internet communication channel. Spivey's entire system is based on providing "live event data in real time." Ex.1017, Abstract. The MQSD can be an "internet server." *See id.* ¶35. Spivey communicates with client devices over "any … combination of wired and/or wireless networks including … the Internet." *Id.* ¶179. For example, client devices "may request and participate in a websocket connection," which "typically comprises a two-way connection between two entities." *Id.* ¶¶43, 61. Moreover, consistent with Spivey, Ellis discloses providing event information over a separate communication path 152 than the video signal 150. Ex.1017 ¶39-41, Fig. 1. Thus, it is my opinion that a POSA would have understood Spivey to disclose transmitting first event information via a separate internet connection.

567. Further, it is my opinion that this information is provided via a connection between a topic queue and the first user equipment device. Users can access the MQSD using a URL. *See* Ex.1017 ¶¶81-82. Then, the user can access the specific topic queue she wishes to receive information from by using a text string, *e.g.*, a topic label or Event ID, associated with a topic queue. *Id.* ¶179, Fig. 9 ("Gamecenter.nfl.ravenssteelers"). Thus, it is my opinion that a POSA would have understood that Ellis in view of Spivey discloses distributing event information from a socket to a user device over an internet connection. Further, I believe a POSA would have understood that the internet connection is established using a URL and text string identifying a uniquely addressable communication endpoint on the MQSD, where first event information is transmitted to a VCD.

b. Dependent Claim 7

i. Limitation 7.0: "The system of claim 1, further comprising a memory system communicatively coupled to the control server, the memory system including a database, wherein in B) the control server:"

568. *See* Claim 1. §X.C.1.a, *supra*. Additionally, in my opinion Ellis and Spivey disclose a memory system, including a database, communicatively coupled to the control server. The '697 explains that the database must be capable of storing "information." *See* Ex.1006, 17:38-45. In my opinion, a POSA would have

understood that the '697's database is a generic server where an organized collection of structured data is stored.

569. In the same way, as shown in Fig. 1, Ellis's SCS is communicatively coupled to a database that stores "some or all of this sports related information" as well as "network viewing statistics and editor picks of sporting events:"

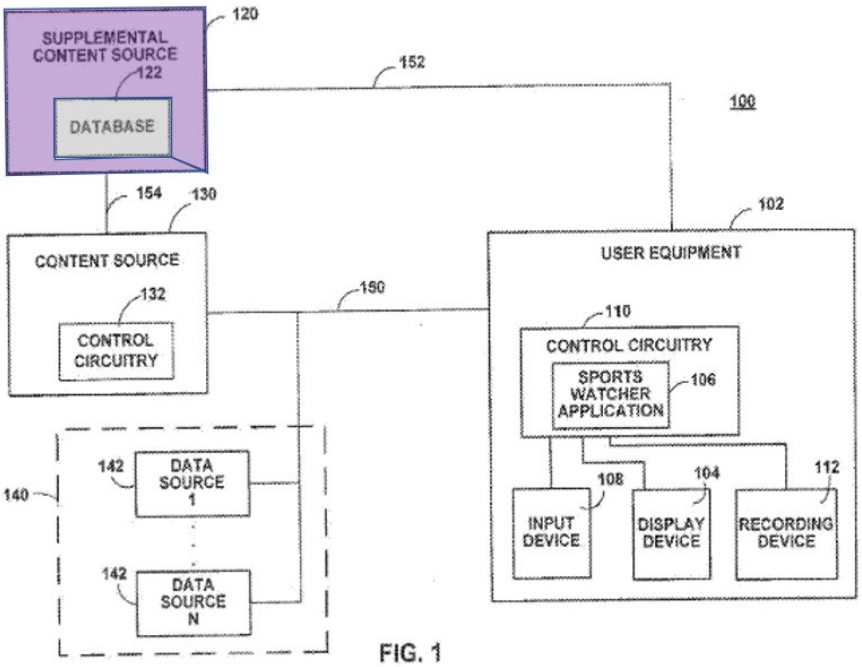

FIG. 1

Ex.1016 ¶¶42-43, 47 (explaining that the SCS's "functionality may be provided by multiple systems at multiple facilities"), Fig. 1.

570. To the extent Ellis does not expressly disclose or render obvious this limitation, Spivey discloses a memory unit, including a database, communicatively coupled to the control server, Spivey's live data server device ("LDSD"), as shown in Figure 4:

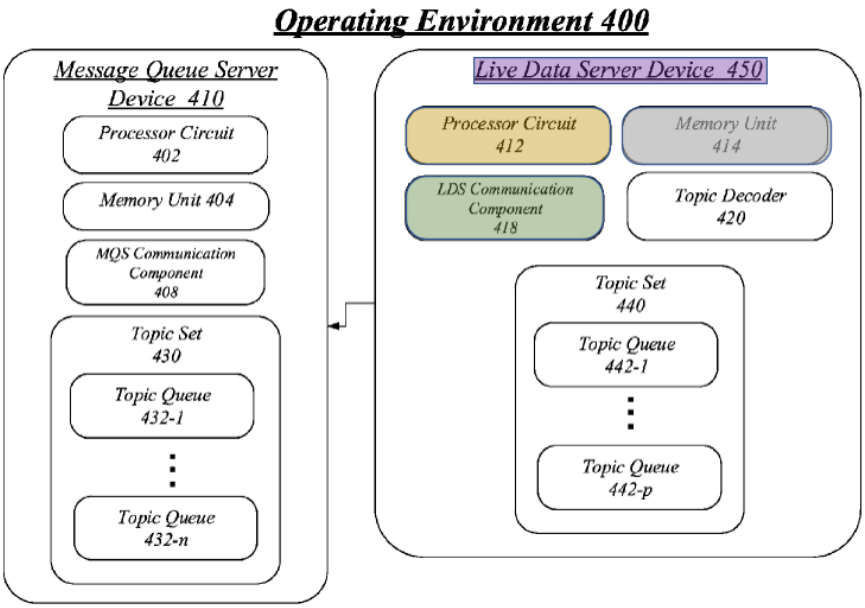

FIG. 4

Ex.1017, Fig. 4. Spivey discloses the LDSD's memory units may be "higher speed" units such as "solid state drives (SSD) and any other type of storage media suitable for storing information." *Id.* ¶167; *see id.* ¶161 ("[C]omputing architecture 2300 may comprise … an electronic device" such as "those described with reference to Figs. 1-5."). Further, Spivey discloses that the LDSD is coupled to an aggregator component, which includes a buffer, which contains its own memory unit. *Id.* ¶¶107, 116, 124. Moreover, Spivey discloses that the LDSD may be coupled with a remote computer, which "typically includes many or all of the elements described relative to the computer 2302" including "a memory/storage device 2350." *Id.* ¶172, Fig. 23. Thus, it is my opinion that a POSA would have understood that Ellis's database and Spivey's memory units disclose memory systems including a database communicatively coupled to the control servers.

ii. **Limitation 7.1-7.7: "retrieves from the event information provider first event data for the first live sporting event, the first event data including at least one of:", "the type of the first live sporting event;", "an event identifier (EventID) for the first live sporting event;", "a status of the first live sporting event;", "progress details for the first live sporting event;", "a date and/or time of the first live sporting event; and" "event participant data regarding participants in the first live sporting event;"**

571. In my opinion, Ellis discloses retrieving from the event information provider, among other data, at least first event data for the first live sporting event, including the time remaining (progress details), quarter (status), down, and yards remaining. Ex.1016 ¶72, Fig 4. Ellis also discusses providing a "program schedule" (date/time), source ID (event identifier), and type of event, e.g., "college football." Ex.1016 ¶3, Fig. 2B, 22. Spivey discloses retrieving, among other data, at least a score, an injury, an error, a name of the player that scored or made a play (participant data). Ex.1017 ¶66. The '697 explains that this limitation is broad and meant to include the disjunctive or conjunctive reading. Ex.1006, 56:39-57:10. Thus, it is my opinion that Ellis in view of Spivey discloses these limitations. §X.C.1.a.v, *supra*.

iii. **Limitation 7.8 & 7.9: "normalizes at least the date and/or time of the first live sporting event to a reference standard time to provide a normalized date and/or time; and"**

"stores the first event data and the normalized date and/or time in the database."

572. In my opinion, Ellis and Spivey both disclose storing the first event data, including date and/or time data in the database. §X.C.1.b.i, *supra*. Normalizing that data means nothing more than "converting" the event data "from UTC to EST/EDT" *i.e.*, a "particular reference frame." Ex.1006, 47:41-61. In any system that provides event data about multiple different live events to users that are not restricted geographically, such as Ellis's content distribution system, in my opinion it would have been obvious and standard to first convert the time stamps to a local time before storing the data, *i.e.*, normalize the data to a standard time. This is particularly so in this case, where Ellis contemplates using this data to allow users to place bets. Ex.1016 ¶13. In my opinion, a POSA would have structured such a system to reduce formatting and conversion errors, such that as many conversions as possible would be under the control of the centralized system, *e.g.*, the database, rather than occur at the user device. Thus, in my opinion Ellis in view of Spivey renders this limitation obvious. *Id.*

c. Dependent Claim 8

i. **Limitation 8.0: "The system of claim 7, wherein in B), the control server further:"**

573. *See* Claim 7. §X.C.1.b, *supra*.

ii. **Limitation 8.1 & 8.2: "normalizes at least one of the progress details for the first live sporting event and the event participant data regarding**

participants in the first live sporting event; and"
"stores the normalized at least one of the progress details and the event participant data in the database."

574. *See* Claim 7. §X.C.1.b, *supra*. These limitations are substantially the same as limitations 7.8 and 7.9, except these limitations also require the control server to normalize and store progress details and event participant data. In my opinion, Ellis in view of Spivey's system contains all of this information and would normalize/store the information for the same reasons as stated above. §X.C.1.b.iii. Thus, I believe that Ellis in view of Spivey renders these limitations obvious.

d. Dependent Claim 9

i. **Limitation 9.0: "The system of claim 7, wherein:"**

575. *See* Claim 7. §X.C.1.b, *supra*.

ii. **Limitation 9.1: "the progress details include the first score information;"**

576. Ellis discloses an SCS providing "detailed game information," which includes the score:

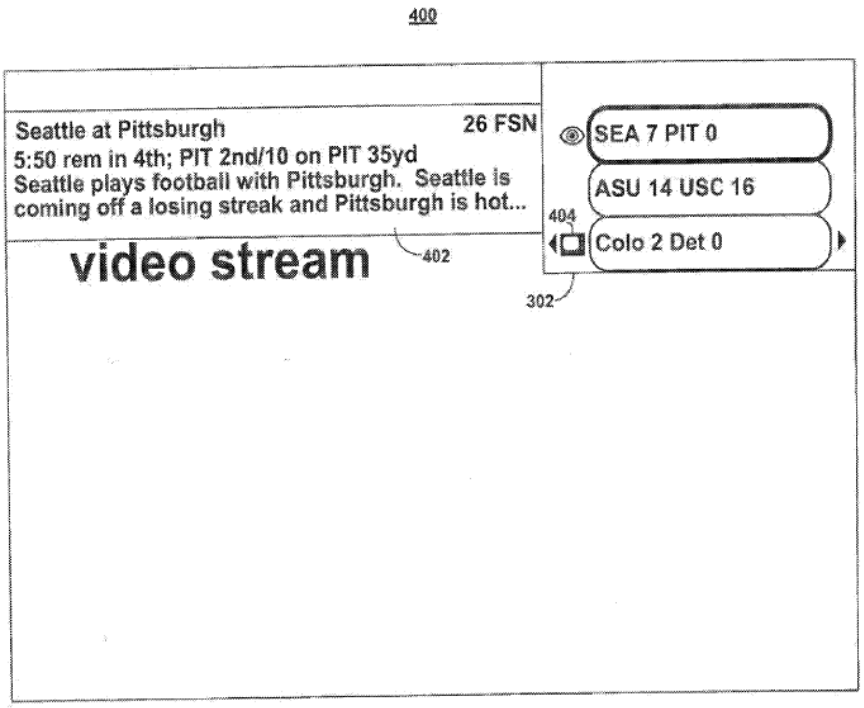

FIG. 4

Ex.1016 ¶72, Fig. 4. Spivey also discloses providing the score:

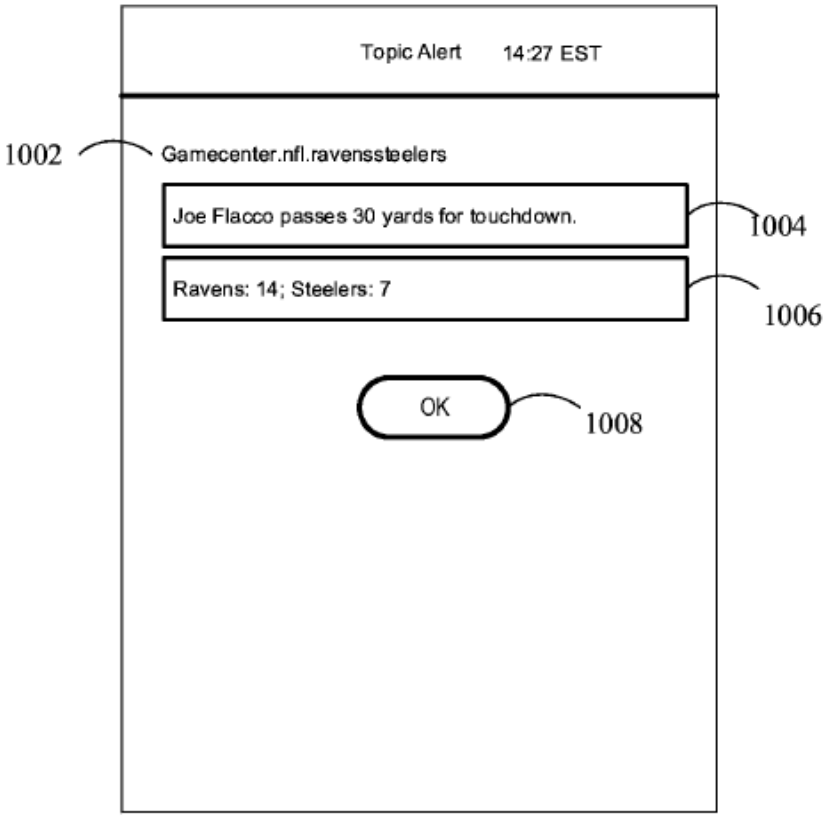

Ex.1017 ¶48, Fig. 10. Thus, it is my opinion that a POSA would have understood that Ellis and Spivey both disclose progress details that include the first score information.

iii. **Limitation 9.2: "the control server periodically retrieves the progress details from the event information provider and updates the first score information; and"**

577. In my opinion, both Ellis and Spivey disclose a control server periodically retrieving real-time information from the event information provider that includes progress details. *See* Ex.1017 ¶48; §§X.C.1.a.v, X.C.1.d.ii, *supra*. The only remaining portion of this limitation is that the system needs to "update the first

score information." In my opinion, a POSA would have understood this claim to require that the system update the database of Claim 7 with the progress details that were just retrieved, such as the score information. Thus, I believe that Ellis in view of Spivey discloses this limitation for the same reasons it discloses "stor[ing] the first event data … in the database." §X.C.1.a.v, *supra*.

iv. **Limitation 9.3: "for each update of the first score information, the control server queues an asynchronous message including the updated first score information for transmission to the at least one first event socket of the at least one socket server."**

578. In my opinion, Ellis in view of Spivey discloses this limitation. The term "asynchronous message" is only used in the '697's claims. *See* Ex.1006, Claim 9. But the '697 does discuss an "asynchronous queue" as a set of "tasks to process" that can either be small "(e.g., at any given second it may be between 0-10 items)" but can "grow [] to a larger size (e.g., 1000 items)." *Id.,* 48:43-53. Thus, it is my opinion that a POSA would have understood that this limitation requires that, for each first event information update at the control server, the control server readies a message including the first score information that will be processed and sent to the socket server's first event socket in turn.

579. In the same way, Spivey's LDSD "may have its own topic set and topic queues." Ex.1017 ¶56. "Upon receiving a message," *e.g.*, live event data, the LDSD "may sort the data payload of message 602 into a topic queue, such as topic queue

… 442-1." *Id.* ¶67. Then, the LDSD may "transmit the data payloads" to MQSD's topic queues:

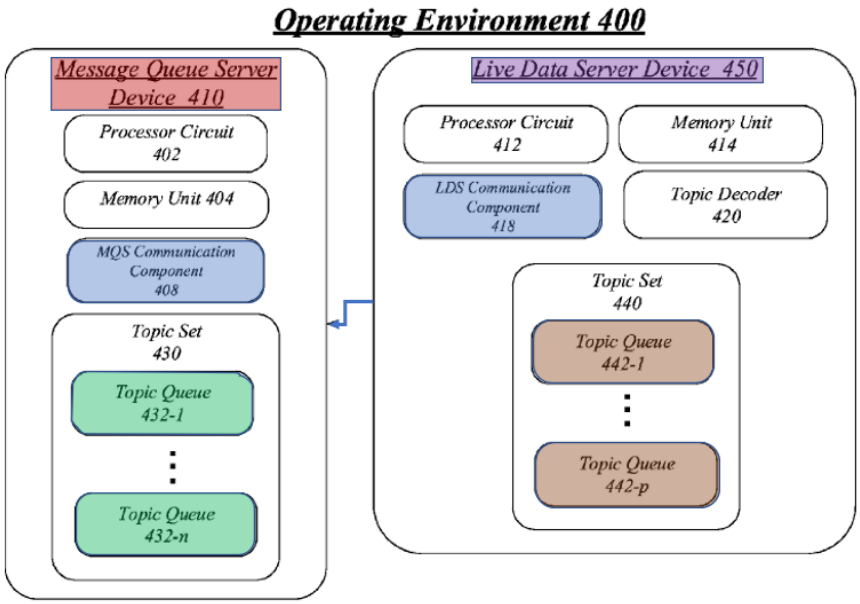

FIG. 4

See id. ¶¶55-56, Fig. 4. Further, Spivey explains that "topic queues 432 may be a queue data structure, in particular a first-in-first out queue, where data payloads are placed." *Id.* ¶51. In other words, the score data is placed in the LDSD's topic queue and is processed in the order that it is received, just like the '697 describes this limitation. Thus, it is my opinion that a POSA would have understood that when the LDSD places the updated score data in the topic queues for transmission to the MQSD's topic queues, it is in fact queuing an asynchronous message, including the updated first event information, for transmission to the at least one first event socket of the at least one socket server.

e. Independent Claim 19

i. **Limitation 19.0: "A system for providing a first plurality of copies of a first broadcaster's live stream of digital content including first video-based commentary about a first live sporting event from a first broadcaster client device to a first plurality of viewer client devices, and for providing a second plurality of copies of a second broadcaster's live stream of digital content including second video-based commentary about a second live sporting event from a second broadcaster client device to a second plurality of viewer client devices, the system comprising:"**

580. In my opinion, Ellis discloses this limitation. Ellis discloses a system for providing a first/second plurality of copies of a first/second broadcaster's live stream of digital content including first/second live sporting event video-based commentary from a first/second broadcaster client device to a first/second plurality of VCDs by providing "enhanced information access and viewing functionality for sports-related programming," which includes "a sporting event, sports news, or sports commentary." Ex.1016 ¶¶8, 11. In my opinion, a POSA would have understood this distribution system provides for a plurality of broadcaster devices and a plurality of copies of multiple broadcast's live stream of digital content to a plurality of viewers of different live sporting events. *See* §X.C.1.a.i; *see also* X.C.1.a.

ii. **Limitation 19.1: "A) a plurality of media sources to:"**

581. In my opinion, Ellis discloses this limitation. The '697 explains that the media sources can be, for example, "computer servers including one or more processors, memory, and one or more communication interfaces" that "receive a live stream of video-based commentary from a given broadcaster client device, and provide copies of the live stream of video-based commentary to one or more [VCDs]." Ex.1006 19:18-23.

582. Ellis discloses content sources, which are "any suitable source of media content" such as a "Internet or network media/web server, or any other suitable facility or system for originating or distributing passive or interactive content to user equipment." Ex.1016 ¶40. Ellis's content sources serve to receive the first/second broadcaster's live stream of digital content and distribute video content to users via communications paths. *See id.* ¶¶39-41, 45, 47. Figure 1 shows a content source distributing video content to users over communication path 150:

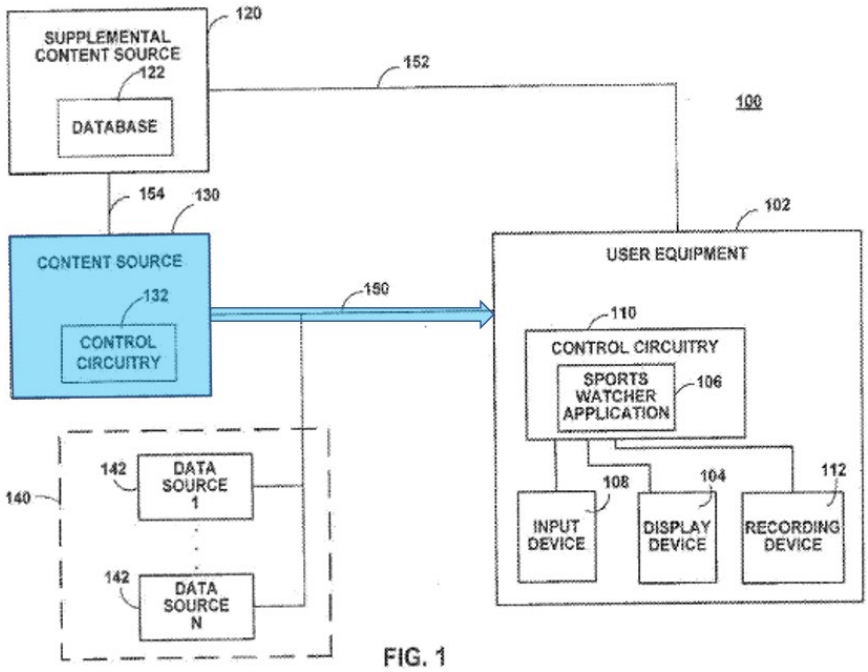

FIG. 1

Ex.1016 ¶¶39-41, Fig. 1. Ellis also discloses multiple content sources, *i.e.*, a plurality. *Id.* ¶39. ("[T]here may be numerous instances of content source 130 …, for clarity only one instance ... has been shown …."). In my opinion, Ellis's content sources perform the same functions as the media sources as recited in limitations 19.2-19.4.

iii. Limitation 19.2: "receive the first broadcaster's live stream of digital content and the second broadcaster's live stream of digital content;"

583. In my opinion, Ellis discloses this limitation. The '697 explains that the media sources receive the first and second stream of digital content from broadcasting clients, as shown in Figure 2. Ex.1006, Fig. 2. Ellis discloses that the content source "may be any suitable source of media content, such as, for example a cable system headend, satellite television distribution facility, television broadcast

facility … Internet or network media/web server, or any other suitable facility or system for … distributing … content to user equipment 102." Ex.1016 ¶40. The content sources provide multiple streams of digital content, including "broadcast programming" and live sporting events. *Id.* ¶¶40, 45, 74. Ellis further discloses that a user may "actively watch one or more sporting events," and the user "may change or swap primary and/or secondary sporting events at any time." *Id.* ¶¶61-62. Thus, it is my opinion that Ellis discloses content sources that receive multiple broadcaster's live streams of digital content and distribute that content to user equipment.

iv. **Limitations 19.3 & 19.4: "provide a first copy of the first plurality of copies to a first viewer client device of the first plurality of viewer client devices via a first Internet communication channel between the plurality of media sources and the first viewer client device of the first plurality of viewer client devices;" and "provide a first copy of the second plurality of copies to a first viewer client device of the second plurality of viewer client devices via a second Internet communication channel between the plurality of media sources and the first viewer client device of the second plurality of viewer client devices;"**

584. In my opinion, Ellis discloses these limitations. The '697 Figure 1A gives an example of the "first viewer client device of the first plurality of viewer client devices." There, a first viewer client device means one user, 200A, of the first

group that receives individual copies 202A, 202B of the first live stream of digital content 102A:

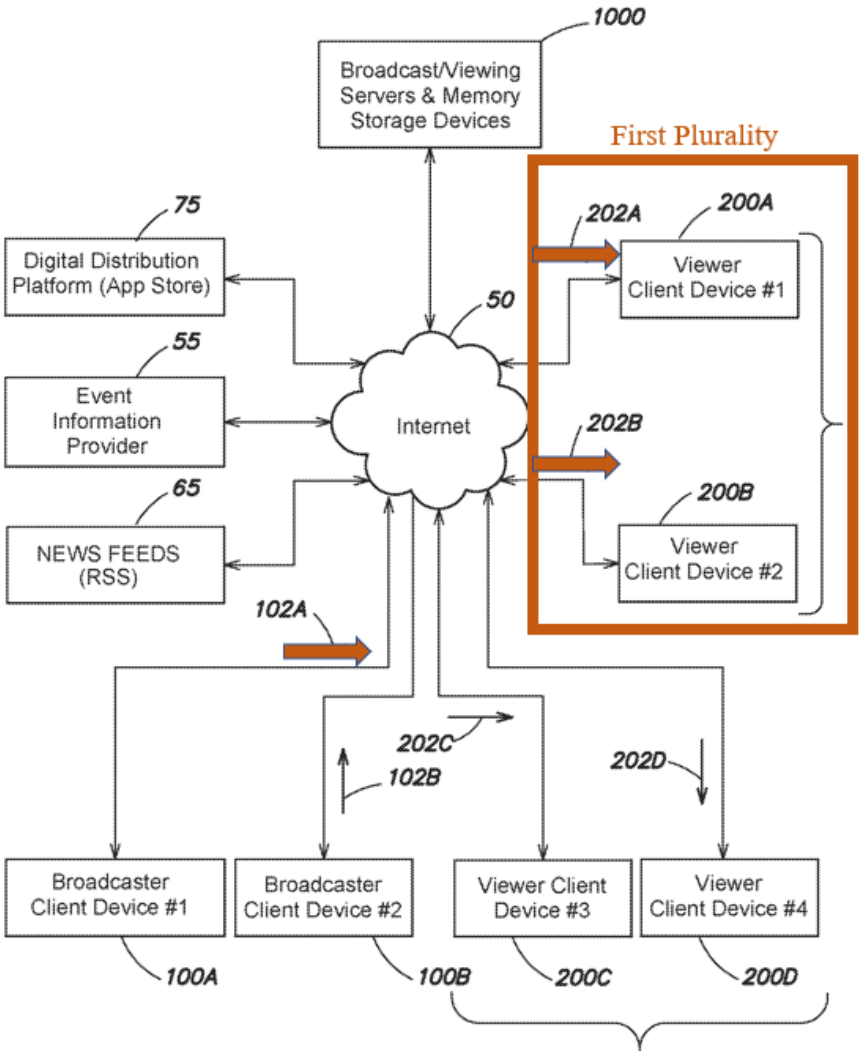

Ex.1006, 9:16-41, Fig. 1A (explaining that Figure 1A depicts providing "a first [VCD] (200A)" of "a first plurality of [VCDs] (200A, 200B)" that receive "copies (202A, 202B) of a first broadcaster's live stream of digital content (102A)."). Likewise, "the first viewer client device of the second plurality of viewer client

devices" simply means one user of the second group of VCDs that receives individual copies of a second live stream of digital content:

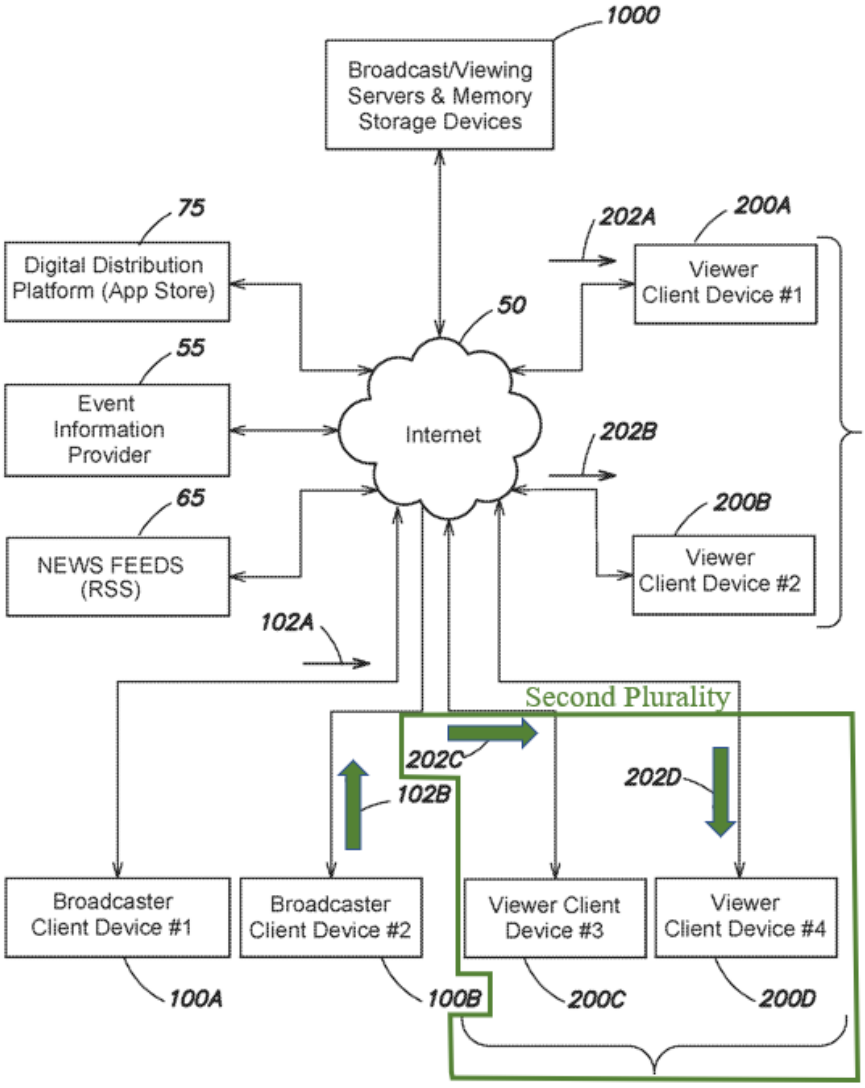

Id., 9:16-41 (explaining that "a first [VCD] (200C)" of "a second plurality of [VCDs] (200C, 200D)" receive "copies (202C, 202D) of a second broadcaster's live stream of digital content (102B)."), Fig. 1A.

585. In my opinion, Ellis discloses a first VCD of a first/second plurality of VCDs because Ellis discloses an "interactive media system" where "any suitable

number of users" may "select any game from the listing" of "available games" to "watch the selected game." Ex.1016 ¶94. For example, a first user in a first group of users (the first plurality) can choose to watch the Yankees broadcast from the YES network. *Id.* ¶55. Meanwhile, a first user of a second group of users can choose to watch a separate live stream of digital content, such as a different game or game commentary. Ex.1016 ¶¶61-62, 132, Fig. 2B. Thus, Ellis discloses multiple first users of multiple different pluralities of VCDs. In my opinion, Ellis also discloses a first copy of a first/second plurality of copies where each user would receive an individual copy of the live stream of digital content. *See* §X.C.3.a.iv. In my opinion, Ellis further discloses providing video content over a first/second Internet communication channel, where each user receives a copy from the content source over an Internet communication channel/path that is unique to each user device. *See* §X.C.3.a.iv.

v. **Limitation 19.5: "B) a control server to periodically retrieve, via the Internet and from an event information provider, first event information germane to the first live sporting event and second event information germane to the second live sporting event; and"**

586. In my opinion, Ellis and Spivey both disclose this limitation. The '697 explains that the control server is a generic server comprising one or more processors, memory devices, and communication interfaces. Ex.1006, 55:60-56:3. The control server retrieves "event information" from an "event information

provider." *Id.*, 21:37-42. The control server then transmits the event information to the socket server. *Id.*, 19:41-45, 21:37-48. The event information is "germane to" a particular "live sporting event," e.g., score information of one of the live streams of digital content. *Id.*, 19:27-37, 21:37-42. Further, the control server may "store at least some portion of retrieved event information." *Id.*, 45:20-48.

587. Ellis's SCS comprises one or more processors, memory devices, and communication interfaces. The SCS can be "any suitable content source configured to provide real-time sports scores and game summary information" including a "content manager, content aggregator, or intermediate content provider." Ex.1016 ¶¶42, 142. The SCS periodically retrieves, via the internet and from an event information provider, first and second event information germane to multiple live sporting events, including score information for each of the multiple live sporting events because the SCS may "provide real-time sports scores and game summary information, … spread and wagering data, and any other sports-related information to user equipment 102." *Id.* ¶41; see *id.* ¶¶72, 117. In my opinion, a POSA would have understood that this information is retrieved via the internet because that is how real-time data was transferred to users at the time of Ellis and Spivey—including score updates and wagering information. *See* Ex.1016 ¶¶42, 142.

588. While a periodic time interval, *e.g.*, every five seconds, is not mentioned in Ellis, it is my opinion that a POSA would have understood that any

system that provides real-time sports statistics, such as Ellis, would necessarily update the statistics on a periodic basis. Alternatively, it is my opinion that it would have been an obvious design choice to use a periodic update to limit queries to the system and load on the components. Further, as depicted in Figure 1, the SCS may store the received "sports-related information … in database 122." Ex.1016 ¶42, Fig. 1.

589. To the extent Ellis does not expressly disclose or render obvious this limitation, it is my opinion that Spivey's live data server device ("LDSD"), as shown in Figure 4, contains the same basic components as the '697's control server. Ex.1017, Fig. 4. The LDSD is a generic server comprising one or more processors, memory devices, and communication interfaces. *Id.* In my opinion, the LDSD performs the same functions as the '697's control server. The LDSD contains an LDS communication component that allows LDSD "to receive live data and transmit the data payloads to MQS device 410." *Id.* ¶55. The live data received by the LDSD includes first/second event information related to at least first/second live events, e.g., "sports scores and breaking news" and when related to baseball can include "a score, a play, an error, an injury, a player-at-bat, and so forth." *See id.* ¶¶27, 48, 66 ("A data payload may include … information about the live event in progress, such as a score, a name of the player that scored or made a play, an injury, a penalty, an error, a new record set, and so forth."), Fig. 9. The LDSD retrieves the first event

information germane to a first live sporting event including the first score information for the first live sporting event via the internet and from an event information provider because the live data sources are "associated with the live event," and servers in Spivey communicate over the internet. *Id*. ¶¶35, 37, 178. Thus, it is my opinion that a POSA would have understood that Ellis and Spivey both disclose this limitation. To the extent Ellis's SCS did not meet this claim limitation, it is my opinion that a POSA would have replaced Ellis's SCS with Spivey's LDSD and MQSD to decrease latency. *See* §IX.A.1, *supra*.

vi. **Limitation 19.6: "C) at least one socket server communicatively coupled to the control server to:"**

590. In my opinion, Ellis in view of Spivey discloses this limitation. Ellis in view of Spivey discloses a socket server communicatively coupled to the control server (which, as discussed above, is disclosed by Ellis's SCS and Spivey's LDSD). The '697 describes the socket server as a generic server. *See* Ex.1006, 55:60-56:3. The purpose of the socket server is to "facilitate communication" of "synchronized event information retrieved by the control server" associated with an event between the control server and the VCDs. *Id.,* 19:64-20:5. The socket server does so by using "one or more sockets … dedicated to the particular event" allowing VCDs "to establish an event information channel with the socket server." *Id.,* 20:5-11. The socket server then receives event information transferred from the control server and

shares the event information in "event messages" via the event information channel "in a synchronized manner" to all viewers "following the particular event." *Id.*

591. Ellis discloses providing event information over a separate connection to user equipment. Ex.1016 ¶¶39-41, Fig. 1. It is my opinion that a POSA would have looked to Spivey to add additional backend architecture to reduce latency in the real-time data delivery system. Like the '697's socket server, Spivey's MQSD is a generic server that contains processors, memory, and communication components. Ex.1017 ¶¶35, 53, Figs. 3, 4. Moreover, Spivey's MQSD carries out the same purpose as the '697's socket server. The MQSD "receive[s]" and "process[es] live data to provide live data" to "the subscribed connected client devices substantially simultaneously." *Id.* ¶36; see *id.* ¶¶45 ("[MQS] device 310 may be a representative example of message queue server 120"), 54 (describing that MQSD is "substantially similar" to "MQS device 310"), 96. To accomplish this, the MQSD receives live event data from the LDSD, which just "receive[d] live data." *Id*. ¶55, Fig. 4. The MQSD is communicatively coupled to the LDSD through the MQS communication component and the LDS communication component. *Id*. ¶¶46 (disclosing that communication component 308 transmits and receives data), 54 (disclosing that communication component 408 is analogous to 308), 55 ("LDS communication component 418 … allows [LDSD] to … transmit the data payloads to [MQSD]."). Then, the MQSD organizes the received live data "into one or more

of a plurality of topic queues" dedicated to storing information about "a specific game." *Id.* ¶¶47, 52. After sorting the data into the proper topic queues, the MQSD shares the information "substantially simultaneously" to "the subscribed connected client devices." See *id.* ¶96. Thus, it is my opinion that a POSA would have understood Spivey's MQSD as disclosing the '697's socket server being communicatively coupled to a control server.

vii. **Limitation 19.7: "receive from the control server at least some of the first event information and at least some of the second event information, wherein:"**

592. In my opinion, Ellis in view of Spivey discloses this limitation. The '697 explains that the "control server passes at least the first score information" to the "socket server." Ex.1006, 21:46-58 ("[F]irst event information includes at least first score information …."). The '697 does not require any specific transmission method. See *id.* The LDSD (the control server) "receive[s] live data and transmit[s] the data payloads to [MQSD (the socket server)]." Ex.1017 ¶¶55. Data payloads may include "a score, a player name, a play, and so forth … ." *Id.* ¶117, Fig. 10. Thus, it is my opinion that a POSA would have understood that Spivey discloses a socket server receiving from the control server at least the first score information.

viii. **Limitations 19.8 & 19.9: "the at least some of the first event information includes first score information for the first sporting event; and" "the at least some of the second event**

information includes second score information for the second sporting event; and"

593. In my opinion, Ellis in view of Spivey discloses this limitation for the same reasons stated above. *See* §§X.C.1.e.v-X.C.1.e.vii. The '697 explains that the "control server passes at least the first score information" to the "socket server." Ex.1006, 21:46-59 ("[F]irst event information includes at least first score information …."). The '697 does not require any specific transmission method. See *Id*. ¶21:36-59 The LDSD (the control server) "receive[s] live data and transmit[s] the data payloads to [MQSD (the socket server)]." Ex.1017 ¶¶55. Data payloads may includes event information such as "a score, a player name, a play, and so forth … ." *Id.* ¶117, Fig. 10. Thus, it is my opinion that a POSA would have understood that Ellis in view of Spivey discloses that the first/second event information received at the at least one socket server from the control server includes at least the first/second score information for the first/second live sporting event.

ix. **Limitations 19.10 & 19.11 "transmit at least the first score information the at least some of the first event information to the first viewer client device of the first plurality of viewer client devices via a third Internet communication channel between at least one first event socket of the at least one socket server and the first viewer client device of the first plurality of viewer devices; and"**
"transmit at least the second score information of the at least some of the second event information to the first viewer client device of the second plurality of viewer client devices via

a fourth Internet communication channel between at least one second event socket of the at least one socket server and the first viewer client device of the second plurality of viewer devices."

594. In my opinion, Ellis in view of Spivey discloses these limitations. The limitations require (1) a first/second socket on the socket server that is specifically dedicated to storing information about the first/second live event, (2) a first viewer client device of a first/second group of VCDs that are watching a live stream of the first/second live event, and (3) transmitting event data about the first live event from the first socket to the VCD using an internet connection. *See* Ex.1006, Claim 1. These features are shown in Figure 2:

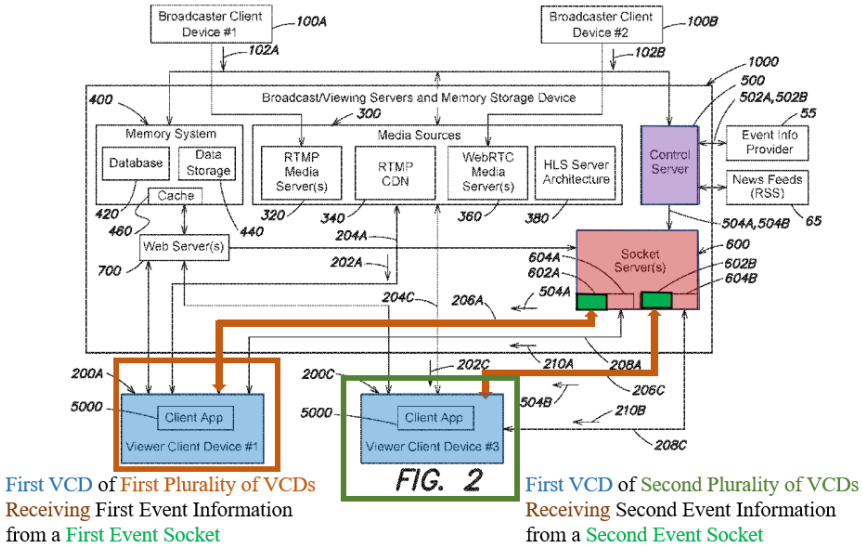

Id., Fig. 2.

595. The '697 explains that the socket server contains "one or more first event sockets 602A dedicated to the first event information." Ex.1006, 21:48-52.

The first/second event sockets have corresponding EventIDs that the VCDs "uses … to connect to the [] socket," *e.g.*, by using a "URL including the … EventID in a path of the URL." *Id.,* 21:53-65. Thus, a POSA would have understood a "socket" to be a uniquely addressable communication endpoint on a server where first/second event information is provided to VCDs. Ex.1006, 20:45-61, 21:53-22:6. A first/second event socket corresponding to the first event information germane to the first live sporting event is simply a socket where information about each sporting event is provided to VCDs. *Id.*

596. In my opinion, Spivey's topic queues act in the same way as the limitation described above, "where data payloads are placed" that, for example each topic queue, "relate[s] to a specific game between two NFL teams." Ex.1017 ¶¶51-52. The data payloads, "[w]hen then live event is a sporting event," include, "for example, a score, a play, …, and so forth." *Id.* ¶48. Topic queues have a corresponding "topic label" which is used "to identify a topic queue." *Id.* ¶49. "A topic label may be, for example" a "text string such as 'gamecenter.nfl.ravenssteelers.'" *Id.* ¶66. Client devices use these topic label text strings to connect and subscribe to MQSD's topic queues. First, client devices "request a live data connection" with the MQSD by "select[ing] or enter[ing] the address or connection information to a particular" MQSD. *See id.* ¶¶81-82. This "address may resemble a uniform resource locator (URL)." *Id.* ¶82.

597. Spivey often discusses a connection between the client device and the system using a live data access server ("LDAS"), however, Spivey also discloses that the message queue server device may be "accessible to clients over the network directly." Ex.1017 ¶36. For example, "MQS communication component 308 … may push data from topic queues 332-1, 332-n to the subscribers of the topics corresponding to those topic queues." *Id.* ¶46. Also, the system does not require an LDAS, only that it "may include a[n] [LDAS]." *Id.* ¶38. Thus, it is my opinion that a POSA would have understood Spivey to disclose a direct connection between the client devices and MQSD. I believe that a POSA would have used this implementation because reducing the amount of server transfers would reduce latency, which is Spivey's main purpose.

598. Further, Spivey discloses, as shown in Figure 9, client devices can use the topic labels to select "the topics available from [MQSD] in a topic selection list" and "subscribe to" those topic queues, which includes multiple live events:

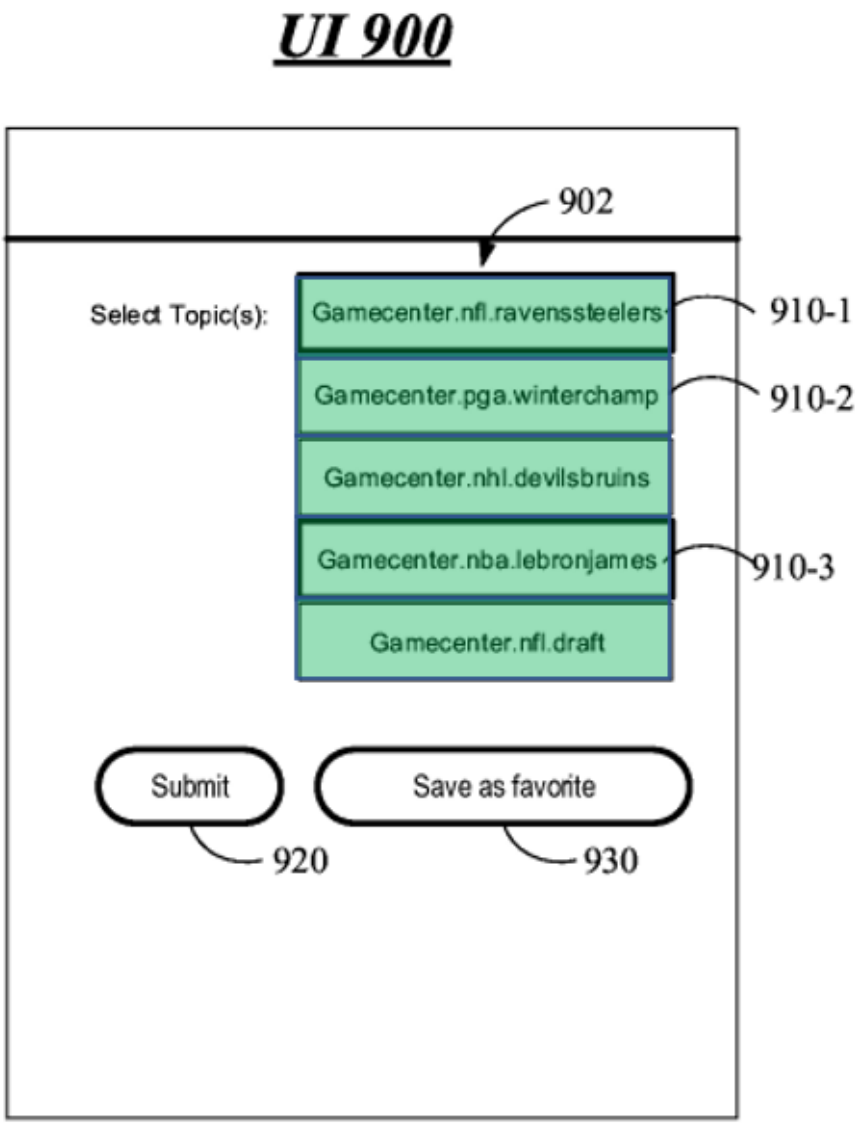

FIG. 9

Id. ¶¶83-84, Fig. 9.

599. Third, "the data payload" may be pushed to the subscribed connected devices that requested that topic. *Id.* ¶96. Thus, in my opinion a POSA would have understood that Spivey's topic queues disclose the '697's first/second event sockets corresponding to the first/second event information germane to the first/second live sporting event.

600. Ellis discloses a first VCD of the first/second plurality of VCDs as discussed above. §X.C.1.e.iv, *supra*. In my opinion, both Ellis and Spivey further disclose transmitting the first/second score information of the at least some of the first/second event information to the first VCD of the first/second plurality of VCDs. For example, in Spivey, the MQSD "may push data from topic queues … to the subscribers of the topics corresponding to those topic queues." Ex.1017 ¶46. In Ellis, SCS may be configured "to provide real-time sports scores and game summary information, … to user equipment 102." Ex.1016 ¶41.

601. In my opinion, Ellis in view of Spivey discloses providing first/second score/event information over separate internet communication channels, which are third/fourth Internet communication channels because the first/second channels are the separate connections that receive the video data. This is a naming convention that shows the individual devices receive individual video feeds (first/separate connections) that are separate than the individual data feeds (third/fourth connections). Spivey's entire system is based on providing "live event data in real time." Ex.1017, Abstract. The MQSD can be an "internet server." *See id.* ¶35. Spivey communicates with client devices over "any … combination of wired and/or wireless networks including … the Internet." *Id.* ¶179. For example, client devices "may request and participate in a websocket connection," which "typically comprises a two-way connection between two entities." *Id.* ¶¶43, 61. Moreover,

consistent with Spivey, Ellis discloses providing event information over a separate communication path than the video signal 150. Ex.1017 ¶39-41, Fig. 1. Thus, in my opinion a POSA would have understood Spivey to disclose transmitting first/second event information via a separate internet connection, which includes the third/fourth Internet communication channels.

602. Further, this information is provided via a connection between a topic queue and the first user equipment device of the first/second plurality of user devices. Users can access the MQSD using a URL. *See* Ex.1017 ¶¶81-82. Then, the user can access the specific topic queue she wishes to receive information from by using a text string, *e.g.*, a topic label or Event ID, associated with a topic queue. *Id.* ¶179, Fig. 9 ("Gamecenter.nfl.ravenssteelers."). Thus, in my opinion a POSA would have understood that Ellis in view of Spivey discloses distributing event information from a first/second event socket of the socket server to a first user device of a first/second plurality of user devices over an internet connection. Further, it is my opinion that a POSA would have understood that the internet connection is established using a URL and text string identifying a uniquely addressable communication endpoint on the MQSD, where first event information is transmitted to a VCD.

f. Dependent Claim 20

i. **Limitations 20.0 & 20.1: "The system of claim 19, wherein:"**
"in A), the plurality of media sources:"

603. *See* Claim 19. §X.C.1.e *supra.*

ii. **Limitations 20.2 & 20.3: "provide a second copy of the first plurality of copies to a second viewer client device of the first plurality of viewer client devices via a third video Internet communication channel between the plurality of media sources and the second viewer client device of the first plurality of viewer client devices; and"**
"provide a second copy of the second plurality of copies to a second viewer client device of the second plurality of viewer client devices via a fourth video Internet communication channel between the plurality of media sources and the second viewer client device of the second plurality of viewer client devices; and"

604. In my opinion, Ellis in view of Spivey discloses these limitations. These limitations are substantially the same as limitations 19.3 and 19.4. *See* §X.C.1.e.iv, *supra*. Specifically, these limitations add providing a second copy, *i.e.*, another copy, of the first/second plurality of copies to a second VCD of the first/second VCDs via a third/fourth video Internet communication channel:[14]

[14] There is no first/second video communication channel in Claim 19. This is a copy and paste error from Claim 4.

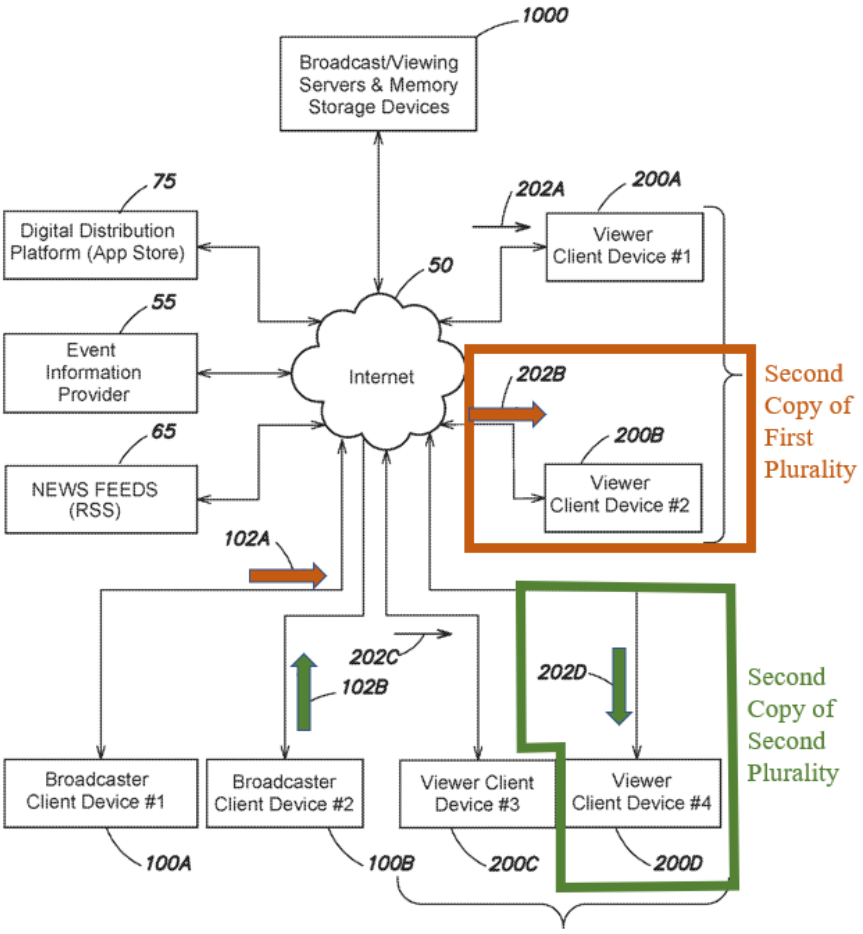

Ex.1006, 15:11-22, Fig. 1A. Ellis discloses these limitations for the same reasons as discussed in Section X.C.1.e.iv. Specifically, in my opinion, Ellis in view of Herzog discloses providing individual copies, to multiple different users, of multiple different broadcaster's live streams of digital content, related to different live sporting events, over individual "video" internet connections. §X.C.1.e.iv, supra;

iii. **Limitation 20.4: "in C), the at least one socket server:"**

605. *See* Limitation 19.6. §X.C.1.e.vi, *supra.*

iv. **Limitations 20.5 & 20.6: "transmits at least the first score information of the first event**

information to the second viewer client device of the first plurality of viewer client devices via a third event information Internet communication channel between the at least one first event socket of the at least one socket server and the second viewer client device of the first plurality of viewer devices; and"
"transmits at least the second score information of the second event information to the second viewer client device of the second plurality of viewer client devices via a fourth event information Internet communication channel between the at least one second event socket of the at least one socket server and the second viewer client device of the second plurality of viewer devices."

606. In my opinion, Ellis in view of Spivey and Herzog discloses these limitations. These limitations are substantially the same as limitations 19.10 and 19.11. §X.C.1.e.ix. These limitations add transmitting the first/second score information of the first/second event information, to a second VCD, of the same first/second plurality of VCDs. In my opinion, both Ellis and Spivey disclose transmitting the first/second score information of the first/second event information to the second VCD of the previously mentioned first/second plurality of VCDs over an individual third/fourth event Internet communication channels.[15] These limitations are substantially the same as Limitations 19.10 and 19.11 discussed

15 There is no first/second event information Internet communication channel in Claim 19. This is a copy and paste error from Claim 4.

above. *See* §X.C.1.e.ix, *supra*. For example, in Spivey, the MQSD "may push data from topic queues … to the subscribers of the topics corresponding to those topic queues." Ex.1017 ¶46. In Ellis, SCS may be configured "to provide real-time sports scores and game summary information, … to user equipment 102." Ex.1016 ¶41; *see id.* ¶39 ("Any suitable number of users may have one or more user equipment … 102."). Thus, it is my opinion that a POSA would have understood that Ellis in view of Spivey discloses these limitations because both disclose transmitting the first/second event/score information to multiple VCDs of the first/second plurality of VCDs over separate internet connections.

g. Dependent Claim 21: "The system of claim 19, wherein in C), the at least one socket server further: transmits and receives first chat information regarding the first live sporting event video-based commentary included in the first broadcaster's live stream of digital content via at least one first chat/system event Internet communication channel between at least one first chat/system event socket of the at least one socket server and the first viewer client device of the first plurality of viewer client devices, wherein the at least one first chat/system event socket corresponds to the first chat information regarding the first live sporting event video-based commentary; and transmits and receives second chat information regarding the second live sporting event video-based commentary included in the second broadcaster's live stream of digital content via at least one second chat/system event Internet communication channel between at least one second chat/system event socket of the at least one socket server and the first viewer client device of the second plurality of viewer client devices, wherein the at least one second

chat/system event socket corresponds to the second chat information regarding the second live sporting event video-based commentary."

607. *See* Claim 19 §X.C.1.e. In my opinion, Ellis in view of Spivey discloses these limitations. Ellis in view of Spivey discloses transmitting and receiving chat information regarding the first/second live sporting event video-based commentary via individual communication channels between a first/second socket and a first VCD of a first/second plurality of VCDs who are watching different events. §§X.C.1.e.ix, X.C.1.f, *supra*. The '697 explains that this chat/system event communication channel may be any generic internet communication channel. Ex.1006, 5:29-36. These limitations only further require that the system "transmits and receives" first/second "chat information regarding" the first/second "live sporting event video-based commentary included in the first[/second] stream of digital content" over another separate, individual connection between a first/second "chat/system event socket" and a first/second VCD:

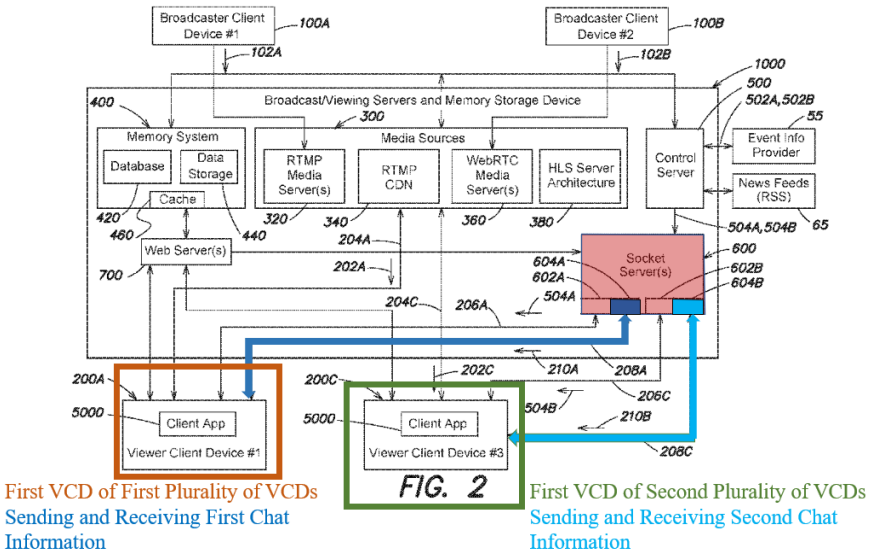

Ex.1006, 22:7-39, Claim 5, Fig. 2. In sum, it is my opinion that these limitations require that chat information is transmitted and received over a third communication channel from another socket that is dedicated for chat/system information.

608. Ellis discloses sending and receiving chat information because users "may also leave feedback regarding the commentary that other users in the media system may view when they access the same commentary." Ex.1016 ¶132. Thus, it is my opinion that a POSA would have understood that Ellis discloses a system that transmits and receives first/second chat information regarding the first/second live sporting event video-based commentary included in the first/second broadcaster's live stream of digital content. *See also* Ex.1016 ¶126 ("To create and send a message (e.g., instant message or email message), the user may select send message option.").

609. Ellis also discloses providing this information on a separate channel to users. Ellis discusses transmitting the video "broadcasts" over communication path 150 and "game summary information, … and any other sports-related information" over communication path 152. Ex.1016 ¶41. Ellis provides that in "some embodiments, this sports-related information is provided to user equipment 102 as a plurality of real-time data feeds. *Id*. Thus, it is my opinion that a POSA would have understood that Ellis discloses transmitting via at least one first/second chat/system event Internet communication channel between at least one first/second chat/system event socket of the at least one socket server and the first VCD of the first/second plurality of VCDs. Ellis in view of Spivey and Herzog discloses a socket specifically designated for chat/system information. Spivey utilizes topic queues to organize "data payloads" that "relate to a specific game between two NFL teams." Ex.1017 ¶¶51-52. The data payloads, "[w]hen the live event is a sporting event," include, "for example, a score, a play, …, and so forth." *Id*. ¶48. Topic queues may be "hierarchically related." *Id.* ¶52. This means that when the system looks at the text string associated with the data payload, the system "may place the data payload only in the topic queue exactly matching the topic label." *Id.* ¶104. For example, if there were two topics "at the same hierarchal level" the data payloads placed in "'gamecenter.nfl.ravenssteelers.statistics' would not be placed in" another topic queue "gamecenter.nfl.ravenssteelers.plays." In sum, the statistics would have been

separate from the chat information. Thus, a POSA would have understood Spivey to disclose a first/second chat/system event socket corresponding to the first/second chat information regarding the first/second live sporting event video-based commentary. *See* §X.C.2.d.

h. Dependent Claim 22

i. **Limitation 22.0: "The system of claim 21, wherein:"**

610. *See* Claim 21. §X.C.1.g, *supra*.

ii. **Limitations 22.1-22.5, 22.7: "in A), the plurality of media sources: provide a second copy of the first plurality of copies to a second viewer client device of the first plurality of viewer client devices via a third video Internet communication channel between the plurality of media sources and the second viewer client device of the first plurality of viewer client devices; and provide a second copy of the second plurality of copies to a second viewer client device of the second plurality of viewer client devices via a fourth video Internet communication channel between the plurality of media sources and the second viewer client device of the second plurality of viewer client devices; and in C), the at least one socket server: transmits at least the first score information of the first event information to the second viewer client device of the first plurality of viewer client devices via a third event information Internet communication channel between the at least one first event socket of the at least one socket server and the second viewer client device of the first plurality of viewer devices;"**

"transmits at least the second score information of the second event information to the second viewer client device of the second plurality of viewer client devices via a fourth event information Internet communication channel between the at least one second event socket of the at least one socket server and the second viewer client device of the second plurality of viewer devices; and"

611. In my opinion, Ellis in view of Spivey discloses these limitations. These limitations are substantially the same as limitations 20.1-20.6. Thus, it is my opinion a POSA would have understood that Ellis in view of Spivey discloses these limitations for the same reasons as stated above. §X.C.1.f, supra.

iii. **Limitations 22.6 & 22.8: "transmits and receives the first chat information regarding the first live sporting event video-based commentary included in the first broadcaster's live stream of digital content via at least one third chat/system event Internet communication channel between the at least one first chat/system event socket of the at least one socket server and the second viewer client device of the first plurality of viewer client devices;"**
"transmits and receives the second chat information regarding the second live sporting event video-based commentary included in the second broadcaster's live stream of digital content via at least one fourth chat/system event Internet communication channel between the at least one second chat/system event socket of the at least one socket server and the second viewer client device of the second plurality of viewer client devices."

612. In my opinion, Ellis in view of Spivey discloses these limitations. These limitations are substantially the same as limitations 22.1 and 22.2. Ex.1006, Claim 21. But these limitations further require that the first/second chat information is sent to a second VCD of the first/second plurality of VCDs over a third/ fourth, or separate/individual, connections. *Id.* Thus, a POSA would have understood that Ellis in view of Spivey discloses these limitations for the same reasons as stated above. §X.C.1.g, supra.

i. Independent Claim 23

i. **Limitation 23.0: "A method for providing a first copy of a first broadcaster's live stream of digital content including first live sporting event video-based commentary from a first broadcaster client device to a first viewer client device, the method comprising:"**

613. In my opinion, Ellis discloses this limitation. This limitation is substantially the same as limitation 19.0. In my opinion, Claim 23 is a method claim implementing the system of Claim 19. Thus, I believe a POSA would have understood that Ellis discloses this limitation for the same reasons stated above. §X.C.1.e, *supra*.

ii. **Limitation 23.1: "A) providing the first copy to the first viewer client device via a first video communication channel between a plurality of media sources and the first viewer client device;"**

614. In my opinion, Ellis and Spivey discloses this limitation. This limitation is substantially the same as limitation 19.3. The claim language is slightly altered, but in my opinion the claims contain the same limitations. Thus, I believe a POSA would have understood that Ellis and Spivey disclose this limitation for the same reasons stated above. §§X.C.1.e.ii-X.C.1.e.iv, *supra*.

iii. **Limitation 23.2: "B) periodically retrieving, via the Internet and from an event information provider, first event information germane to a first live sporting event, wherein the first event information includes first score information for the first live sporting event; and"**

615. In my opinion, Ellis in view of Spivey discloses this limitation. This limitation is substantially the same as limitation 19.5. The claim language is slightly altered, but in my opinion the claims contain the same limitations. Thus, I believe a POSA would have understood that Ellis in view of Spivey discloses this limitation for the same reasons stated above. §X.C.1.e.v, *supra*.

iv. **Limitation 23.3: "C) transmitting the first score information to at least the first viewer client device via a first event information communication channel between at least one first event socket of at least one socket server and the first viewer client device of the first plurality of viewer devices, wherein the at least one first event socket corresponds to the first event information germane to the first live sporting event."**

616. In my opinion, Ellis in view of Spivey discloses this limitation. This limitation is substantially the same as limitation 19.10-11. The claim language is slightly altered, but in my opinion the claims contain the same elements. Thus, I believe a POSA would have understood that Ellis discloses this limitation for the same reasons stated above. §§X.C.1.e.vi-X.C.1.e.ix, *supra*.

j. Dependent Claim 24

i. **Limitation 24.0: "The method of claim 23, further comprising:"**

617. See Claim 23. §X.C.1.i, *supra*.

ii. **Limitation 24.1: "D) transmitting and receiving first chat information regarding the first live sporting event video-based commentary included in the first broadcaster's live stream of digital content via at least one first chat/system event Internet communication channel between at least one first chat/system event socket of the at least one socket server and the first viewer client device of the first plurality of viewer client devices, wherein the at least one first chat/system event socket corresponds to the first chat information regarding the first live sporting event video-based commentary."**

618. This limitation is substantially the same as limitation 21.1. The claim language is slightly altered, but in my opinion the claims contain the same limitations. Thus, I believe a POSA would have understood that Ellis discloses this limitation for the same reasons stated above. §X.C.1.g, *supra*.

k. Dependent Claim 25

i. **Limitation 25.0: "The method of claim 23, wherein B) comprises:"**

619. See Claim 23. §X.C.1.i, supra.

ii. **Limitation 25.1: "B1) periodically updating the first score information; and"**

620. In my opinion, Ellis and Spivey both disclose this limitation. Both Ellis and Spivey disclose a control server periodically updating/retrieving real-time information from the event information provider that includes event information. *See* Ex.1017 ¶48 (disclosing a score, play, error, and at-bat updates); §§VIII.A.3.e, X.C.1.i.iii, *supra*.

621. This claim further requires that the system update the control server's memory storage system with the event information details that were periodically retrieved. The '697 explains that the database must be capable of storing "information." *See* Ex.1006, 17:38-45. In my opinion, Ellis and Spivey both disclose a memory system, including a database, communicatively coupled to the control server. Thus, I believe a POSA would have understood that the '697's database is a generic server where an organized collection of structured data is stored.

622. Further, as shown in Fig. 1, Ellis's SCS is communicatively coupled to a database that stores "some or all of this sports related information" as well as "network viewing statistics and editor picks of sporting events:"

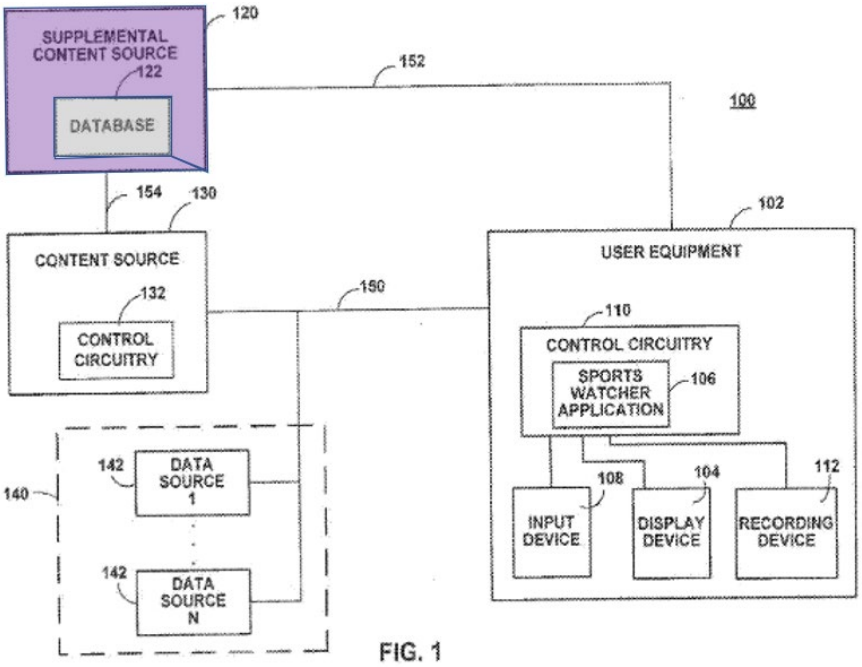

FIG. 1

Ex.1016 ¶¶42-43, 47 (explaining that the SCS's "functionality may be provided by multiple systems at multiple facilities"), Fig. 1.

623. Spivey also discloses a memory unit, including a database, communicatively coupled to the control server, Spivey's live data server device ("LDSD"), as shown in Figure 4:

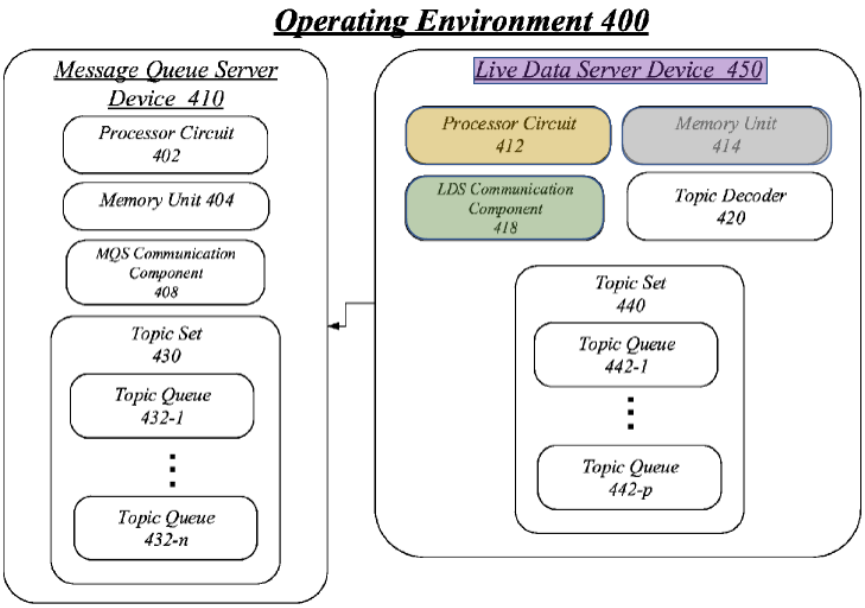

FIG. 4

Ex.1017, Fig. 4. Spivey discloses that the LDSD's memory units may be "higher speed" units such as "solid state drives (SSD) and any other type of storage media suitable for storing information." *Id.* ¶167; *see id.* ¶161 ("[C]omputing architecture 2300 may comprise … an electronic device" such as "those described with reference to Figs. 1-5."). Spivey notes that data "may be stored on [LDSD] 450." *Id.* ¶57. In my opinion, it would have been obvious for a POSA to store (update) this information in the LDSD for redundancy. Thus, I believe a POSA would have understood that Ellis's database and Spivey's memory units disclose memory systems where score information is stored for "updating the event information."

iii. **Limitation 25.2: "B2) for each updating of the first score information, queueing an asynchronous message including the updated first score information for transmission to the at least one first event socket of the at least one socket server."**

624. In my opinion, Ellis in view of Spivey discloses this limitation. The term "asynchronous message" is only used in the '697's claims. *See* Ex.1006. But the '697 does discuss an "asynchronous queue" as a set of "tasks to process" that can either be small "(e.g., at any given second it may be between 0-10 items)" but can "grow [] to a larger size (e.g., 1000 items)." *Id.,* 48:43-53. Thus, it is my opinion that a POSA would have understood that this limitation requires that for each first event information update at the control server, the control server readies a message including the first event information, that will be processed and sent to the socket server's first event socket in turn.

625. It is my opinion that Spivey discloses—in the same way as the limitation described above—a LDSD that "may have its own topic set and topic queues." Ex.1017 ¶56. "Upon receiving a message," *e.g.*, live event data, the LDSD "may sort the data payload of message 602 into a topic queue, such as topic queue … 442-1." *Id.* ¶67. Then, the LDSD may "transmit the data payloads" to MQSD's topic queues:

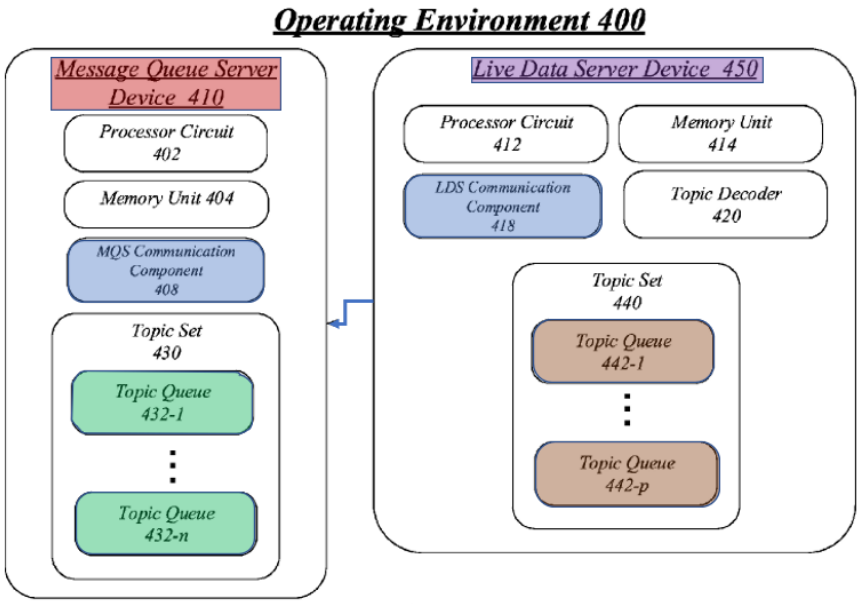

FIG. 4

See id. ¶¶55-56, Fig. 4. Further, Spivey explains that "topic queues 432 may be a queue data structure, in particular a first-in-first out queue, where data payloads are placed." *Id.* ¶51. In other words, the data is placed in the LDSD's topic queue, and is processed in the order that it is received, just like the '697 describes this limitation. Thus, it is my opinion that a POSA would have understood that when the LDSD places the updated real-time data in the topic queues for transmission to the MQSD's topic queues, it is in fact queueing an asynchronous message, including the updated first event information, for transmission to the at least one first event socket of the at least one socket server.

l. Independent Claim 27

i. Limitation 27.0: "A system for providing a first copy of a first broadcaster's live stream of digital content including first live sporting event video-based commentary from a first

broadcaster client device to a first viewer client device, the system comprising:"

626. *See* Limitation 19.0. §X.C.1.e.i, *supra.* Ellis's figure 30 also discloses this limitation:

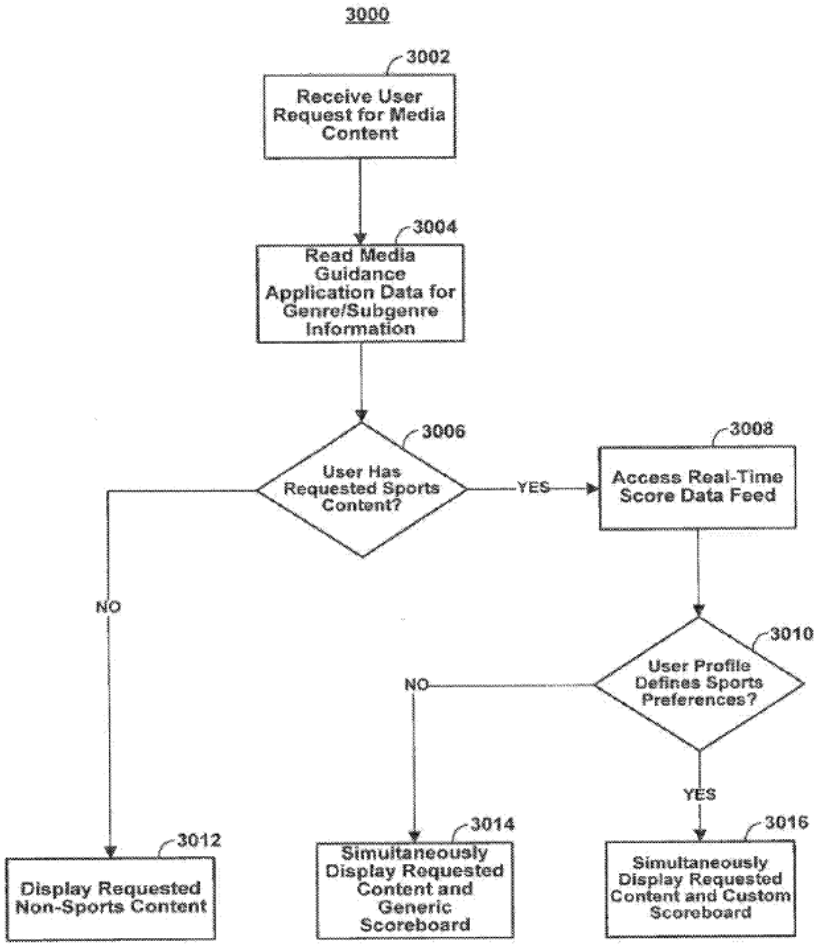

FIG. 30

Ex.1016, Fig. 30.

ii. **Limitation 27.1: "means for providing the first copy to the first viewer client device via a first video communication channel;"**

627. *See* Limitations 19.1-19.4 and Ellis's figure 30. §§X.C.1.e.ii-iv, *supra*; Ex.1016, Fig. 30.

iii. **Limitations 27.2 & 27.3: "means for periodically retrieving, via the Internet and from an event information provider, first event information germane to a first live sporting event, wherein the first event information includes first score information for the first live sporting event; and"**
"means for transmitting the first score information to at least the first viewer client device via a first event information communication channel that is different from the first video communication channel."

628. *See* Limitations 19.5-19.11. §§X.C.1.e.v-ix, *supra*. Ellis's figure 32 and Spivey's Figures 12 and 13 also discloses these limitations:

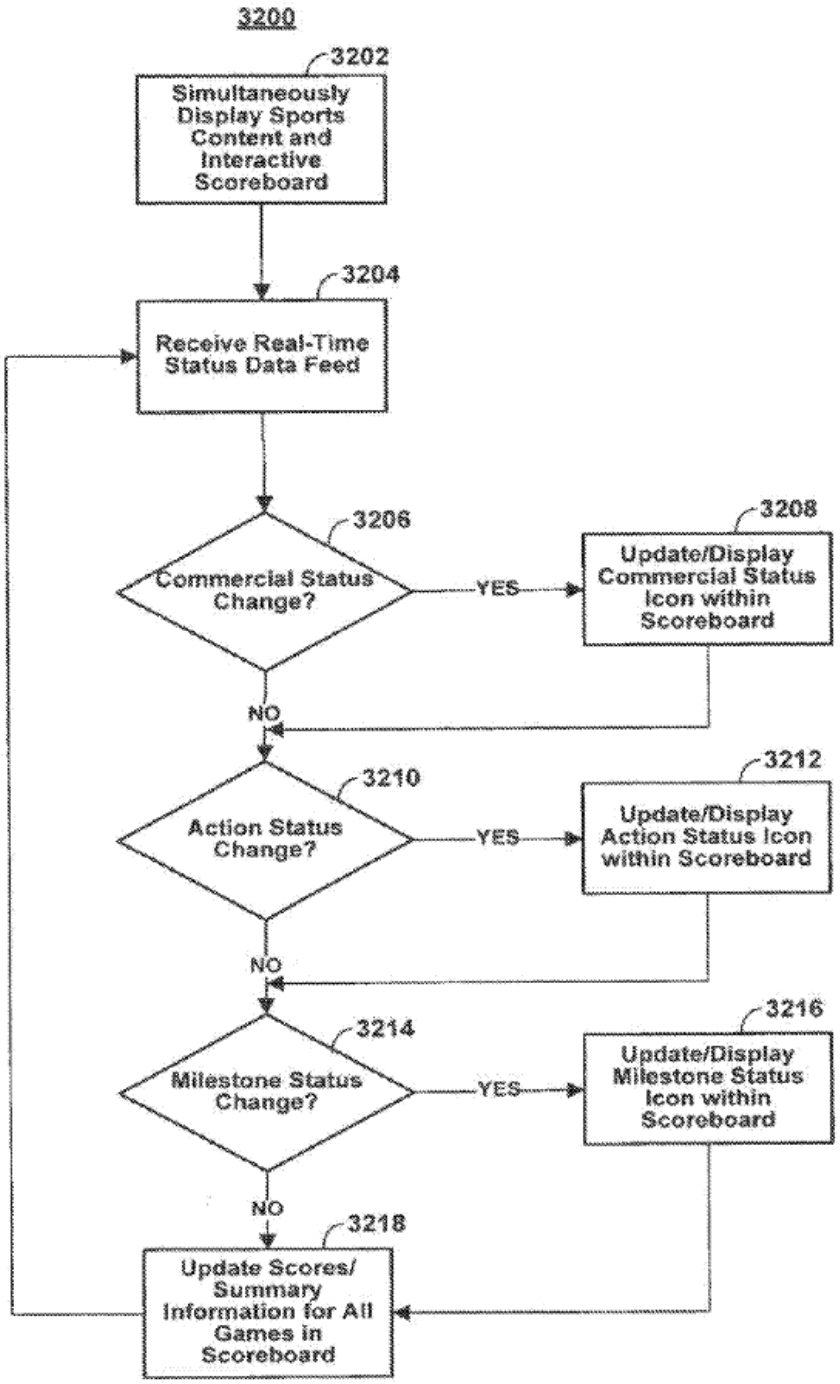

Ex.1016, Fig. 30, 32; Ex.1017, Figs. 12-13.

m. Dependent Claim 28

i. **Limitation 28.0: "The system of claim 27, further comprising:"**

629. *See* Claim 27. §X.C.1.l, *supra*.

ii. **Limitation 28.1: "means for transmitting and receiving first chat information regarding the first live sporting event video-based commentary included in the first broadcaster's live stream of digital content via at least one first chat/system event Internet communication channel that is different from the first video communication channel and the first event information communication channel."**

630. *See* Claim 21. §X.C.1.g, *supra*. Ellis's figures 30 and 32 and Spivey's figures 12 and 13 also disclose this limitation. Ex.1016, Figs. 30, 32; Ex.1017, Figs. 12-13.

n. Dependent Claim 29 ("The system of claim 27, wherein the means for periodically retrieving includes means for updating the first score information and queueing an asynchronous message including the updated first score information for transmission on the first event information communication channel.")

631. *See* Claims 25 and 27. §§X.C.1.k, X.C.1.l, *supra.*

o. Dependent Claim 30

i. **Limitation 30.0: "The system of claim 27, wherein the means for providing the first copy to the first viewer client device via a first video communication channel comprises:"**

632. *See* Claim 23.1, §X.C.1.i.ii, *supra*.

ii. **Limitation 30.1 & 30.2: "an HTTP live streaming (HLS) mother server to receive a first HLS file suite representing the first broadcaster's live stream of digital content; and"**

> **"a plurality of HLS child servers, communicatively coupled to the HLS mother server and an HLS content delivery network (HLS CDN), to provide the first copy to the first viewer client device via the first video communication channel between the HLS CDN and the first viewer client device, wherein the first copy is based on the first HLS file suite received by the HLS mother server."**

633. In my opinion, Ellis discloses these limitations. The '697 explains that an HLS mother server is a generic "computer server" comprising known components such as "processors, memory, and … communication interfaces." Ex.1006, 19:7-13; *see id.,* 27:30-39. This HLS mother server is simply capable of receiving and transmitting an HLS file suite, *i.e.*, a "broadcaster's live stream." *Id.,* 27:30-39, 28:5-23. HLS is a data transmission format adopted in 2009 to provide video feeds over the internet. Ex.1028, 1.

634. Ellis teaches streaming video from content source 130, *e.g.*, an "Internet or network media/web server" to a client device, over the internet. Ex.1016 ¶¶40, 74 ("For IPTV, tuned content may include content to be delivered on a particular network address … on which an IP socket is currently joined."). Thus, it is my opinion that a POSA would have understood that Ellis, filed in 2014, teaches using all forms of standard internet transmission protocols, including HLS streaming.

635. The '697 further explains that Figure 8 depicts "HLS server architecture:"

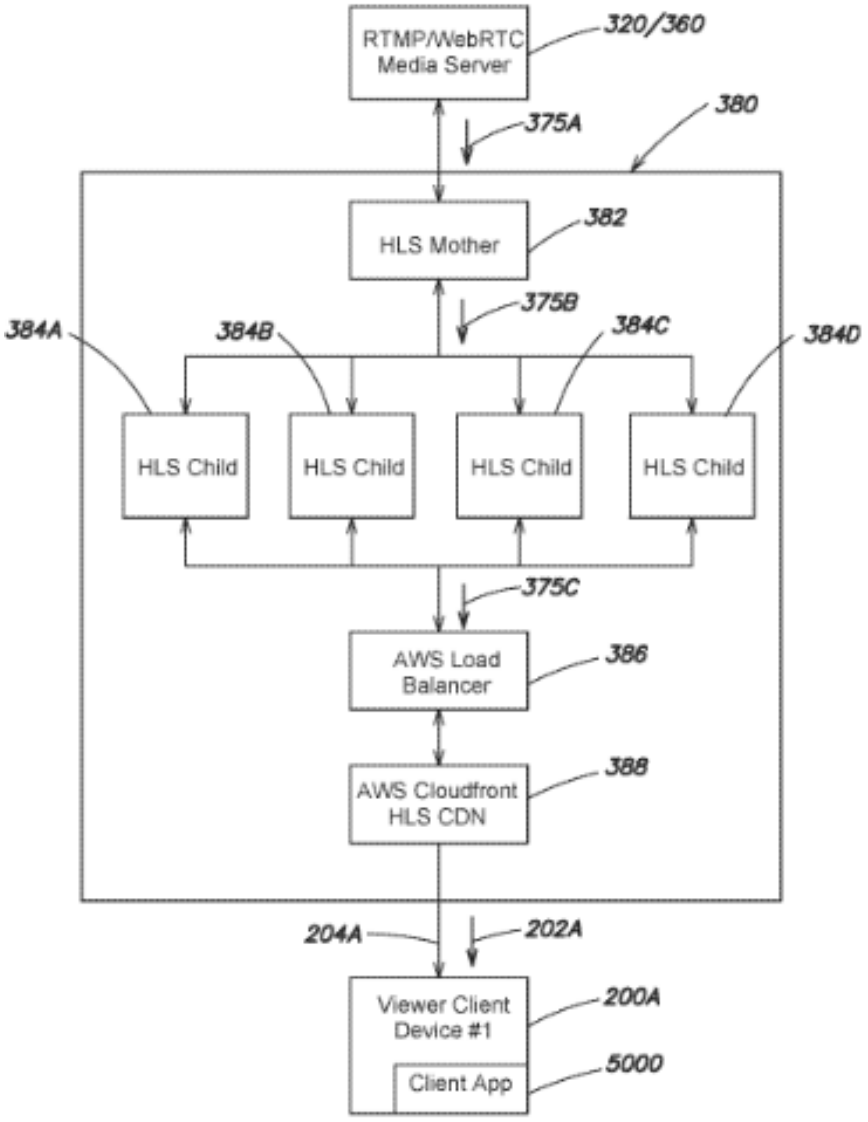

FIG. 8

Ex.1006, Fig. 8. As shown in figure 8, HLS child servers receive the video feed from a mother server. *Id.* An HLS child server is a generic server capable of streaming an HLS file suite. *See id.*, 19:7-13, 27:30-39. After receiving the HLS file, the child servers "pass on copies 375C … to one or more geographically distributed servers" that are "serving as an HLS CDN." *Id.,* 40:37-61. The '697

recognizes that this HLS CDN is a "conventional (e.g. global) CDN" that then "serves" "streams … to multiple viewers." *Id.*

636. Ellis discloses a generic server and system that streams copies of an HLS file suite to user devices over a communication channel between the CDN and user device. §§X.A.2.a, X.B.n.ii, *supra.* Moreover, Ellis discloses a content source that provides video feeds utilizing "multiple systems at multiple facilities," *e.g.*, utilizing child servers. Ex.1016 ¶47. Further, Ellis discloses an "entire media system or network." In my opinion, such a system would necessarily utilize a conventional CDN, as recognized in the '697. Thus, I believe a POSA would have understood Ellis discloses this limitation.

2. '697 Ground 1B: Claims 2-6 are Obvious over Ellis in View of Spivey and Herzog

a. Dependent Claim 2

i. Limitation 2.0: "The system of claim 1, wherein:"

637. *See* Claim 1. §X.C.1.a, *supra*.

ii. Limitation 2.1: "the first live sporting event video-based commentary included in the first broadcaster's live stream of digital content from the first broadcaster client device, and the second live sporting event video-based commentary included in the second broadcaster's live stream of digital content from the second broadcaster client device, both relate to the first live sporting event;"

638. In my opinion, Herzog discloses a broadcasting system where in one embodiment, "four video/audio streams" are provided from the same live sporting event, e.g., an "Indy Race." Ex.1015 ¶46. Herzog explains that "any number of sources may be available" from the same event. *Id.*/ Examples of this video include "live videos of four of the drivers inside their respective vehicles" or may be "multiple video/audio streams of race cars and drivers, as they are imaged at different locations on the race track." *Id.* ¶¶45, 80. User devices can "initiate[] a video request of one or more channels of video/audio for viewing a live event on the device display." *Id.* ¶70. In my opinion, multiple users selecting the same stream of video would create a "plurality of viewers" and all would receive "their own copy" of the live stream. The live stream is then "published" to the user device via "content delivery network 47" using "an HTTPS Live Streaming (HLS)-based media streaming communications protocol." Ex.1015 ¶¶51, 55. In my opinion, Herzog's multiple views from the same live event, combined with Ellis's multi-broadcast system, would provide multiple live streams of digital content wherein the first/second live sporting event video-based commentary from the first/second broadcaster client device both relate to the first live sporting event. Thus, I believe that Ellis in view of Herzog discloses this limitation.

iii. **Limitation 2.2: "in C), the at least one socket server further transmits the first score information for the first live sporting event to at least the first viewer client device of the second**

plurality of viewer client devices via a second event information Internet communication channel between the at least one first event socket of the at least one socket server and the first viewer client device of the second plurality of viewer devices."

639. In my opinion, Ellis in view of Spivey and Herzog discloses this limitation. Spivey discloses the at least one socket server, transmitting first score information for the first live sporting event via multiple event information Internet communication channel between the at least one first event socket of the at least one socket server and the first VCD of a plurality of VCDs. *See* §X.C.1.a.viii, *supra*. Here, the claim requires providing the same score information, over a separate connection, between the first event information socket to another user, who is watching a different broadcaster's live stream including video-based commentary of the same live event, such as one of the videos from Herzog's "Indy Race." Ex.1006, Claim 2. In my opinion, Ellis in view of Herzog discloses multiple groups, watching different live broadcasting streams of digital content that include video-based commentary, of the same game. §X.C.1.a, *supra*. Further, Spivey discloses transmitting score "data from topic queues … to the subscribers of the topics corresponding to those topic queues" on individual internet connections. Ex.1017 ¶46; *see* §X.C.1.a.viii, *supra*. Thus, in my opinion a first viewer from the second plurality, *i.e.*, a viewer watching video stream two from the Indy Race, would receive

the score update, *e.g.*, car position, over a separate internet connection, between her device to the first event socket, *i.e.*, the topic queue.

b. Dependent Claim 3

i. **Limitation 3.0: "The system of claim 2, wherein:"**

640. *See* Claim 2. §X.C.2.a, *supra*.

ii. **Limitation 3.1 & 3.2: "none of the first score information of the first event information is included in the first copy of the first plurality of copies of the first broadcaster's live stream of digital content provided to the first viewer client device of the first plurality of viewer client devices via the first video Internet communication channel; and"**
"none of the first score information of the first event information is included in the first copy of the second plurality of copies of the second broadcaster's live stream of digital content provided to the first viewer client device of the second plurality of viewer client devices via the second video Internet communication channel."

641. As explained for Claims 1 and 2, Ellis in view of Herzog discloses that a "content source" streams "broadcast programming," *i.e.*, at least two different video streams of the same live event, to multiple different users over individual "communication path[s] 150." Ex.1016 ¶¶39-40; *see* §§X.C.1.a, X.C.2.a, *supra*. While the user is receiving video content over communication path 150, Ellis is providing "real-time sports scores and game summary information" to those user equipment devices from SCS over a separate individual communication path 152:

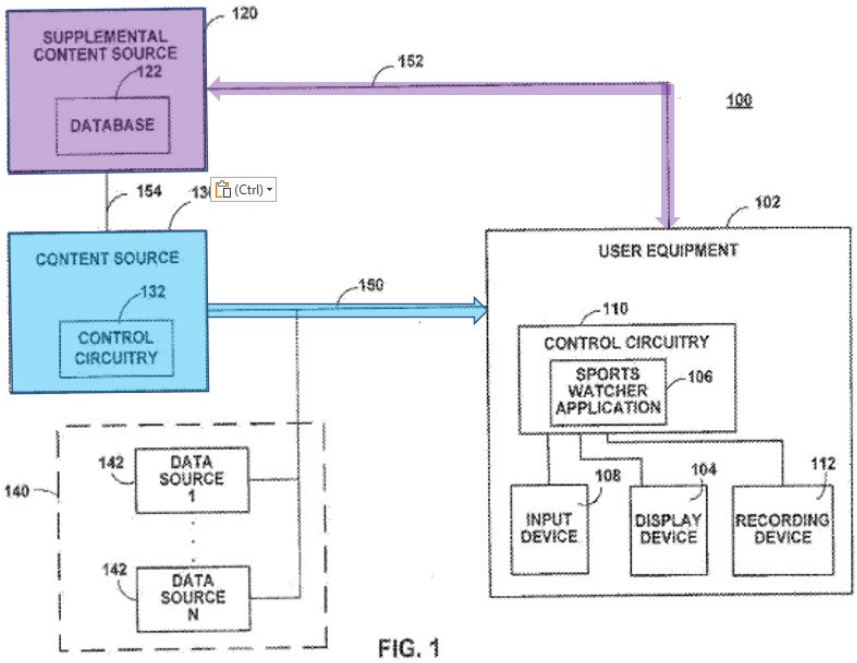

FIG. 1

Id. ¶¶39-41, Fig. 1. In other words, the real-time sport scores, game summary information, and more, *i.e.*, event information, is provided via communication path 152 and not with a copy of the video content, 150. *Id*. Thus, as explained and shown, it is my opinion that a POSA would have understood Ellis in view of Herzog to disclose a system that does not provide event information in the first copies of live streams of digital content provided via video internet communication channels.

c. Dependent Claim 4

i. Limitation 4.0: "The system of claim 2, wherein:"

642. *See* Claim 2. §X.C.2.a, *supra*.

ii. Limitation 4.1: "in A), the plurality of media sources:"

643. *See* Limitation 1.1. §X.C.1.a.ii, *supra*.

iii. **Limitation 4.2 & 4.3: "provide a second copy of the first plurality of copies to a second viewer client device of the first plurality of viewer client devices via a third video Internet communication channel between the plurality of media sources and the second viewer client device of the first plurality of viewer client devices; and"**
"provide a second copy of the second plurality of copies to a second viewer client device of the second plurality of viewer client devices via a fourth video Internet communication channel between the plurality of media sources and the second viewer client device of the second plurality of viewer client devices; and"

644. In my opinion, Ellis in view of Herzog discloses these limitations. These limitations require providing a second copy, *i.e.*, another copy, of the first/second plurality of copies to a second VCD of the first/second VCDs via a third/fourth connection:

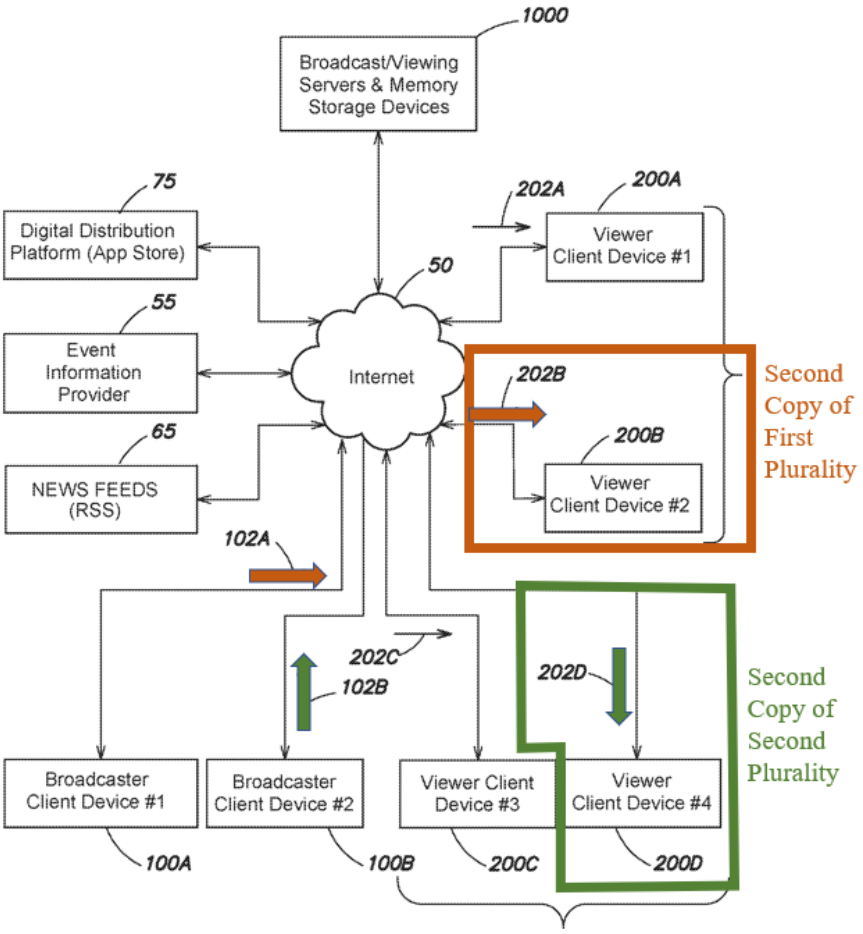

Ex.1003, 15:11-22, Fig. 1A.

645. Ellis discloses these limitations for the same reasons as discussed in section X.C.1.a.iv, *supra*. Specifically, Ellis in view of Herzog discloses providing individual copies, to multiple different users, of multiple different broadcaster's live streams of digital content, related to the same game, over individual "video" internet connections. §§X.C.1.a.iv, X.C.2.a, *supra*.

iv. **Limitation 4.4: "in C), the at least one socket server:"**

646. *See* Limitation 1.6. §X.C.1.a.vi, *supra*.

v. **Limitation 4.5 & 4.6: "transmits at least the first score information of the first event information to the second viewer client device of the first plurality of viewer client devices via a third event information Internet communication channel between the at least one first event socket of the at least one socket server and the second viewer client device of the first plurality of viewer devices; and" "transmits at least the first score information of the first event information to the second viewer client device of the second plurality of viewer client devices via a fourth event information Internet communication channel between the at least one first event socket of the at least one socket server and the second viewer client device of the second plurality of viewer devices."**

647. In my opinion, Ellis in view of Spivey and Herzog discloses these limitations. These limitations are substantially the same as limitations 1.8 and 2.2. §§X.C.1.a.viii, X.C.2.a.iii. These limitations simply add transmitting the first score information of the first event information, to a second VCD, of the same first/second plurality of VCDs.

648. Both Ellis and Spivey further disclose transmitting the first score information of the first event information to the second VCD of the previously mentioned first/second plurality of VCDs. For example, in Spivey, the MQSD "may push data from topic queues … to the subscribers of the topics corresponding to those topic queues." Ex.1017 ¶46. In Ellis, SCS may be configured "to provide real-time sports scores and game summary information, … to user equipment 102."

Ex.1016 ¶41; *see id.* ¶39 ("Any suitable number of users may have one or more user equipment … 102."). Thus, it is my opinion that a POSA would have understood that Ellis in view of Spivey and Herzog discloses these limitations because both disclose transmitting the first event information to multiple VCDs of the first/second plurality of VCDs.

d. Dependent Claim 5

i. Limitation 5.0 "The system of claim 2, wherein in C), the at least one socket server further:"

649. *See* Claim 2. §X.C.2.a, *supra*.

ii. Limitation 5.1 & 5.2: "transmits and receives first chat information regarding the first live sporting event video-based commentary included in the first broadcaster's live stream of digital content via at least one first chat/system event Internet communication channel between at least one first chat/system event socket of the at least one socket server and the first viewer client device of the first plurality of viewer client devices, wherein the at least one first chat/system event socket corresponds to the first chat information regarding the first live sporting event video-based commentary; and" "transmits and receives second chat information regarding the second live sporting event video-based commentary included in the second broadcaster's live stream of digital content via at least one second chat/system event Internet communication channel between at least one second chat/system event socket of the at least one socket server and the first viewer client device of the second plurality of viewer client devices, wherein the at least one

second chat/system event socket corresponds to the second chat information regarding the second live sporting event video-based commentary."

650. In my opinion, Ellis in view of Spivey and Herzog discloses transmitting information via individual communication channels between a socket and a first VCD of a first/second plurality of VCDs who are watching the same event. §§X.C.1.a.viii, X.C.2.a.iii *supra*. The '697 explains that this chat/system event communication channel may be any generic internet communication channel. Ex.1006, 5:29-36. These limitations only further require that the system "transmits and receives" first/second "chat information regarding" the first/second "live sporting event video-based commentary included in the first[/second] stream of digital content" over another separate, individual connection between a first/second "chat/system event socket" and a first/second VCD:

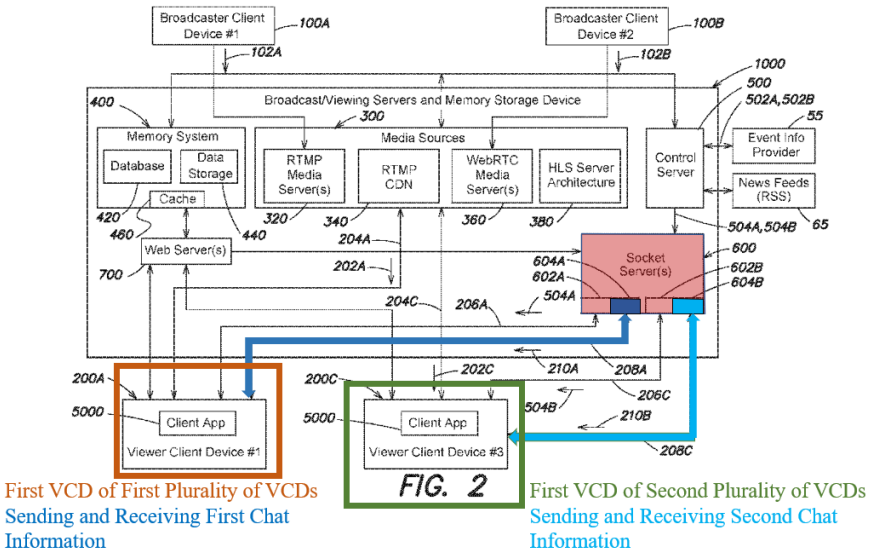

Ex.1006, 22:7-39, Claim 5, Fig. 2. In my opinion, these limitations require that chat information is transmitted and received over a third communication channel from another socket that is dedicated for chat/system information.

651. In my opinion, Ellis discloses sending and receiving chat information because users "may also leave feedback regarding the commentary that other users in the media system may view when they access the same commentary." Ex.1016 ¶132. It is my opinion that a POSA would have understood that Ellis discloses a system that transmits and receives first/second chat information regarding the first/second live stream of digital content. *See* Ex.1016 ¶126 ("To create and send a message (e.g., instant message or email message), the user may select send message option.").

652. In my opinion, Ellis also discloses providing this information on a separate channel to users. Ellis discusses transmitting the video "broadcasts" over communication path 150 and "game summary information, … and any other sports-related information" over communication path 152. Ex.1016 ¶41. Ellis provides that in "some embodiments, this sports-related information is provided to user equipment 102 as a plurality of real-time data feeds. *Id.* ¶41. Thus, it is my opinion that a POSA would have understood that Ellis discloses transmitting via at least one first/second chat/system event Internet communication channel between at least one

first/second chat/system event socket of the at least one socket server and the first VCD of the first/second plurality of VCDs.

653. In my opinion, Ellis in view of Spivey and Herzog further discloses a socket specifically designated for chat/system information. Spivey utilizes topic queues to organize "data payloads" that "relate to a specific game between two NFL teams." Ex.1017 ¶¶51-52; *see* §X.C.1.a.viii, *supra*. The data payloads, "[w]hen the live event is a sporting event," include, "for example, a score, a play, …, and so forth." Ex.1017 ¶48. Topic queues may be "hierarchically related." *Id.* ¶52. This means that when the system looks at the text string associated with the data payload, the system "may place the data payload only in the topic queue exactly matching the topic label." *Id.* ¶104. For example, if there were two topics "at the same hierarchal level" the data payloads placed in "'gamecenter.nfl.ravenssteelers.statistics' would not be placed in" another topic queue "gamecenter.nfl.ravenssteelers.plays." In sum, the statistics would be separate from the chat information. Thus, it is my opinion that a POSA would have understood Spivey to disclose a first/second chat/system event socket corresponding to the first/second chat information regarding the first/second live sporting event video-based commentary.

e. Dependent Claim 6

i. Limitation 6.0: "The system of claim 5, wherein:"

654. *See* Claim 5. §X.C.2.d, *supra*.

ii. **Limitation 6.1: "in A), the plurality of media sources:"**

655. *See* Limitation 1.1. §X.C.1.a.ii, *supra.*

iii. **Limitation 6.2 & 6.3: "provide a second copy of the first plurality of copies to a second viewer client device of the first plurality of viewer client devices via a third video Internet communication channel between the plurality of media sources and the second viewer client device of the first plurality of viewer client devices; and"**
"provide a second copy of the second plurality of copies to a second viewer client device of the second plurality of viewer client devices via a fourth video Internet communication channel between the plurality of media sources and the second viewer client device of the second plurality of viewer client devices; and"

656. *See* Limitations 4.2 and 4.3. §X.C.3.d.iii, *supra*.

iv. **Limitation 6.4: "in C), the at least one socket server:"**

657. *See* Limitation 1.6. §X.C.1.a.vi, *supra*.

v. **Limitation 6.5 & 6.7: "transmits at least the first score information of the first event information to the second viewer client device of the first plurality of viewer client devices via a third event information Internet communication channel between the at least one first event socket of the at least one socket server and the second viewer client device of the first plurality of viewer devices;"**
"transmits at least the first score information of the first event information to the second viewer client device of the second plurality of viewer client devices via a fourth event information

Internet communication channel between the at least one first event socket of the at least one socket server and the second viewer client device of the second plurality of viewer devices; and"

658. *See* Limitations 4.5 and 4.6. §X.C.2.c.v, *supra*.

vi. **Limitation 6.6 & 6.8: "transmits and receives the first chat information regarding the first live sporting event video-based commentary included in the first broadcaster's live stream of digital content via at least one third chat/system event Internet communication channel between the at least one first chat/system event socket of the at least one socket server and the second viewer client device of the first plurality of viewer client devices;"**
"transmits and receives the second chat information regarding the second live sporting event video-based commentary included in the second broadcaster's live stream of digital content via at least one fourth chat/system event Internet communication channel between the at least one second chat/system event socket of the at least one socket server and the second viewer client device of the second plurality of viewer client devices."

659. *See* Limitations 5.1 and 5.2. §X.C.2.d.ii, *supra*.

3. '697 Ground 2: Claims 1-9, 19-25, 27-30 Are Obvious Over Herzog in View of Spivey and Ellis

a. Independent Claim 1

i. **Limitation 1.0: "A system for providing a first plurality of copies of a first broadcaster's live stream of digital content including first live sporting event video-based commentary from a first broadcaster client device to a first plurality**

of viewer client devices, and for providing a second plurality of copies of a second broadcaster's live stream of digital content including second live sporting event video-based commentary from a second broadcaster client device to a second plurality of viewer client devices, the system comprising:"

660. Herzog provides "live video and audio data" to user devices over a "communication network." *See* Ex.1015, Abstract. Herzog improves on traditional "sports application systems" where the meta-data is included "as part of the video broadcast." Ex.1015 ¶83. It is my opinion that any such system of video broadcasts would obviously, if not inherently, include traditional broadcasts that include broadcaster's video-based commentary. Herzog includes providing "multiple video/audio streams of race cars and drivers, as they are imaged at different locations on the race track:"

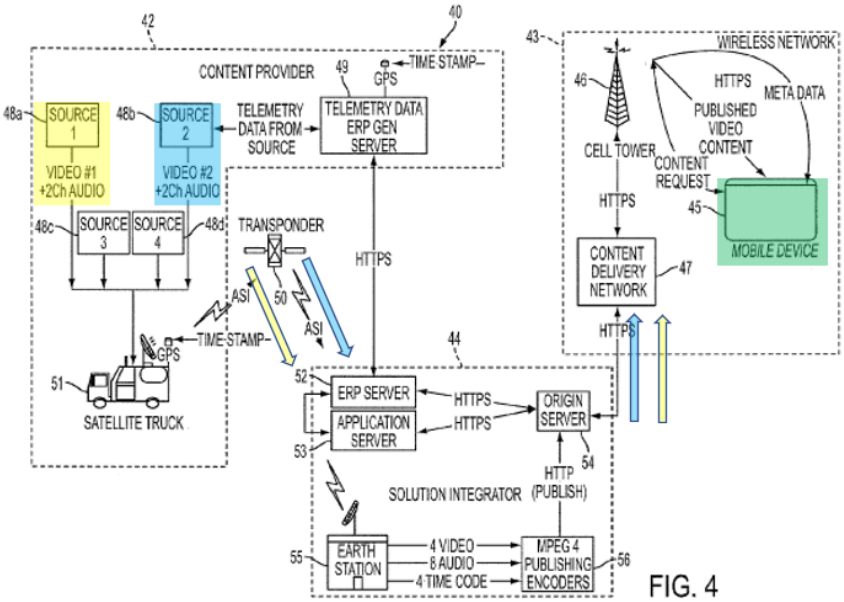

FIG. 4

Ex.1015 ¶45, Fig 4. The above system focuses on one live event, an Indy Car Race, but Herzog notes that it can be sed for any type of live sporting event. *Id.* ¶¶45, 83. The system makes these video feeds available to "mobile stations" and other "similar users." *Id.* ¶19. Each user can then request video from "one or more channels of video/audio for viewing a live event." *Id.* ¶70. The user then "receives both the video/audio stream in an HTTPS Live Streaming (HLS)-based media streaming communications protocol." *Id.* ¶51.

661. Also, Ellis discloses expanding on Herzog's system by providing multiple live streams of digital content that is of two different live sporting events, which would include multiple broadcasting devices. Ex.1016. ¶¶62-63, Fig. 2B. Thus, in my opinion Herzog and Ellis provide a system where a plurality of different users can receive the same, or different, pluralities of copies of a first/second broadcaster's live stream of digital content including first/second live sporting event video-based commentary from a first/second broadcaster client device to a first/second plurality of VCDs. Thus, it my opinion Herzog and Ellis disclose this limitation.

ii. **Limitation 1.1: "A) a plurality of media sources to:"**

662. Herzog discloses multiple MPEG 4 Publishing Encoders ("Encoders") as a plurality of media sources. Ex.1015 ¶48. In my opinion—just like in the '697—these encoders receive all of the video and audio data from the live event, such as

the Indy Car Race. *Id.* ¶¶46 (noting that any form of communication technologies may be used to send the video/audio data to MPEG Publishing Encoders), 49. The Encoders can "encode" the video and audio data and then the "encoded video is then published to the content delivery network 47 (for example) via IP utilizing [] HLS." *Id.* ¶49, 55. Moreover, as explained below, Herzog's content sources perform the same functions as the media sources as recited in limitations 1.2-1.4. Thus, in my opinion Herzog discloses this limitation.

iii. **Limitation 1.2: "receive the first broadcaster's live stream of digital content and the second broadcaster's live stream of digital content;"**

663. Herzog's Encoders receive all of the video and audio data from the live event, such as the Indy Car Race. Ex.1015 ¶49. Herzog discloses that the audio and video data can be provided to the Encoders using "communications technologies for communicating multiple video and audio streams." *Id.* ¶46. Thus, it is my opinion that Herzog discloses content sources that receive multiple broadcaster's live streams of digital content and distribute that content to user equipment.

iv. **Limitation 1.3 & 1.4: "provide a first copy of the first plurality of copies to a first viewer client device of the first plurality of viewer client devices via a first video Internet communication channel between the plurality of media sources and the first viewer client device of the first plurality of viewer client devices; and"**
"provide a first copy of the second plurality of copies to a first viewer client device of the

second plurality of viewer client devices via a second video Internet communication channel between the plurality of media sources and the first viewer client device of the second plurality of viewer client devices;"

664. In my opinion, Herzog discloses providing the received copies to multiple different users with the option to select any of the available video feeds. Ex.1015 ¶70. As would have been obvious in a content distribution scheme such as Herzog that provides at least four different video streams, two or more users would select a first stream to view, and two or more different users would select a second stream to view, *e.g.*, the broadcast from their favorite driver's car. Ex.1015 ¶¶46, 70. In my opinion, this would create a first and second plurality of VCDs where each plurality contains a first VCD. Thus, I believe Herzog discloses multiple first users of multiple different pluralities of VCDs.

665. Herzog provides the selected video stream to each user individually via "an HTTPS Live Streaming (HLS)-based media streaming communications protocol." Ex.1015 ¶51. Thus, it is my opinion that a POSA would have understood that each user device receives their own copy of the video stream. This would create a plurality of copies being distributed, where the first copy is sent to the first user, and so on and so forth. Thus, in my opinion each user would receive an individual copy of the broadcaster's live stream of digital content.

666. Herzog discloses providing individual copies of multiple different live streams to multiple groups of client devices. §§X.C.3.a.iv, *supra*. Herzog further discloses providing video content over a video Internet communication channel via HTTPS Live Streaming, *i.e.*, an internet connection. Ex.1015 ¶51. Thus, it is my opinion that Herzog discloses that each user receives an individual copy from the Encoders over a video internet communication path that is unique to each user device. *Id.* ¶¶2 (noting that user devices "are used mainly for viewing published content from the Internet, such as video."), 51.

v. **Limitation 1.5: "B) a control server to periodically retrieve, via the Internet and from an event information provider, first event information germane to a first live sporting event, wherein the first event information includes first score information for the first live sporting event; and"**

667. Herzog's ERP Server connects to the ERP Gen Server over the internet:

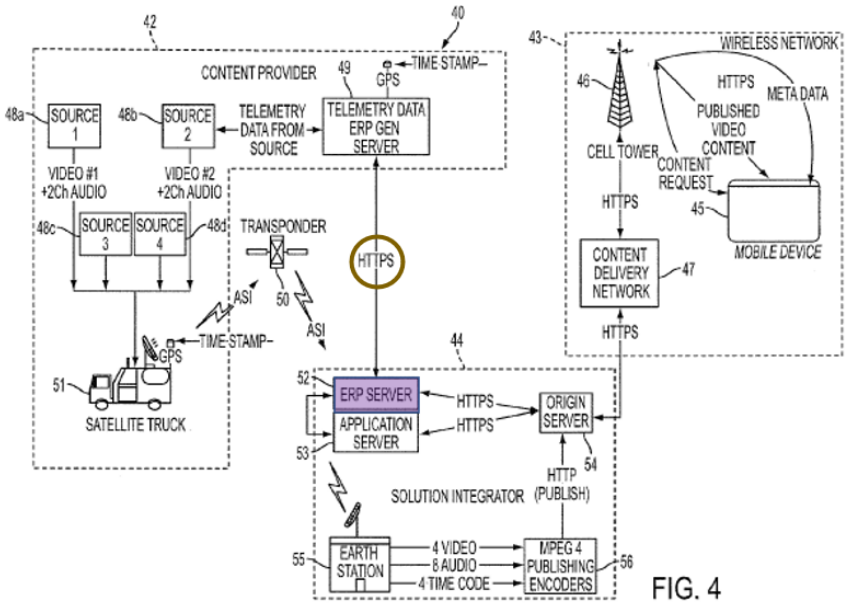

FIG. 4

Ex.1015 ¶¶45, 47, 50, Fig. 4. The ERP Server is a generic server that retrieves meta-data from the ERP Gen Server. *Id.* ¶¶16, 47, 50. In my opinion, it contains the same components as the control server: a processor, memory device, and communication interfaces. *Id.* ¶13, 85-86, Fig. 8. The ERP Server "acts as an intermediary between the ERP generator server and the origin server." *Id.* ¶50. The meta-data retrieved includes event information germane to the sporting event such as "the status of each car and driver in the race" and may include "lap number, car speed and acceleration" but there may be as many as "50 different parameters that are available." *Id.* ¶45. The ERP Server retrieves this first score information via the internet and from an event information provider because it retrieves the information, *e.g.*, status of each car and driver in the race, in HTTPS format, an internet communication protocol from an ERP Server. *Id.* ¶¶17, 50.

668. Additionally, Ellis's SCS can be "any suitable content source configured to provide real-time sports scores and game summary information" including a "content manager, content aggregator, or intermediate content provider." Ex.1016 ¶¶41-42, 142. The SCS periodically retrieves event information germane to all live sporting events, *e.g.*, score information because the SCS may "provide real-time sports scores and game summary information, … spread and wagering data, and any other sports-related information to user equipment 102." *Id.* ¶41; *see id.* ¶¶72, 117. It is my opinion that a POSA would have understood that this

information is retrieved via the internet and from an event information provider because that is how real-time data was transferred to users at the time of Herzog, Spivey, and Ellis—including score updates and wagering information. *See, e.g.*, Ex.1016 ¶¶42, 142.

669. While a periodic time interval, e.g., every .1 seconds, is not mentioned in Herzog or Ellis, it is my opinion that a POSA would have understood that any system that provides real-time sports statistics, such as Herzog, would necessarily update the statistics on a periodic basis. A POSA would have also understood that HTTP is a pull-oriented protocol where receivers such as the ERP server need to explicitly ask for new data. To reduce latency using an HTTP connection, a POSA would have known to have Herzog's ERP server periodically check for the content availability as often as possible. Alternatively, in my opinion it would have been an obvious design choice to use a periodic update to limit queries to the system and load on the components. Thus, I believe a POSA would have understood that Herzog and Spivey both disclose this limitation.

vi. **Limitation 1.6: "C) at least one socket server communicatively coupled to the control server to:"**

670. In my opinion, Herzog in view of Ellis and Spivey discloses a socket server communicatively coupled to the control server (which, as discussed above, is disclosed by Herzog's ERP Server). Herzog discloses providing event information

over a separate connection to user equipment. Ex.1015 ¶¶48-52, 67, Figs. 4, 6. That process includes the ERP Server transmitting data to the Origin Server:

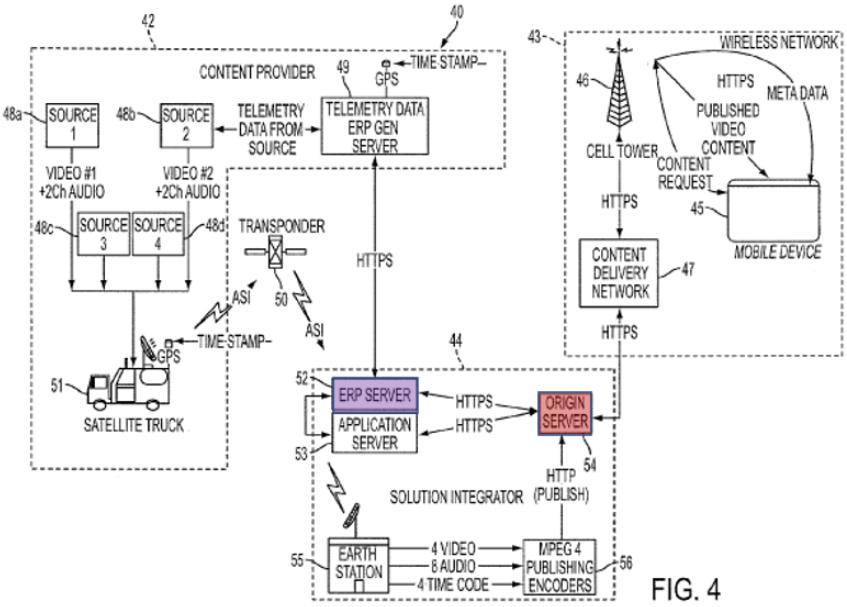

FIG. 4

Ex.1015 ¶¶50-51, 83, Fig. 4. But in a system of Spivey combined with Ellis, it is my opinion that a POSA would have looked to Spivey to add additional backend architecture to organize the meta-data from multiple events and reduce latency in the real-time data delivery system. I believe a POSA would have done this by incorporating Spivey's MQSD into Herzog's Origin Server.

671. Like the '697's socket server, Spivey's MQSD is a generic server that contains processors, memory, and communication components. Ex.1017 ¶¶35, 53, Figs. 3, 4. Moreover, in my opinion Spivey's MQSD carries out the same purpose as the '697's socket server. The MQSD "receive[s]" and "process[es] live data to provide live data" to "the subscribed connected client devices substantially

simultaneously." *Id.* ¶36; *see id.* ¶¶45 ("[MQS] device 310 may be a representative example of message queue server 120"), 54 (describing that MQSD is "substantially similar" to "MQS device 310"), 96. To accomplish this, the MQSD receives live event data from the LDSD, which just "receive[d] live data:"

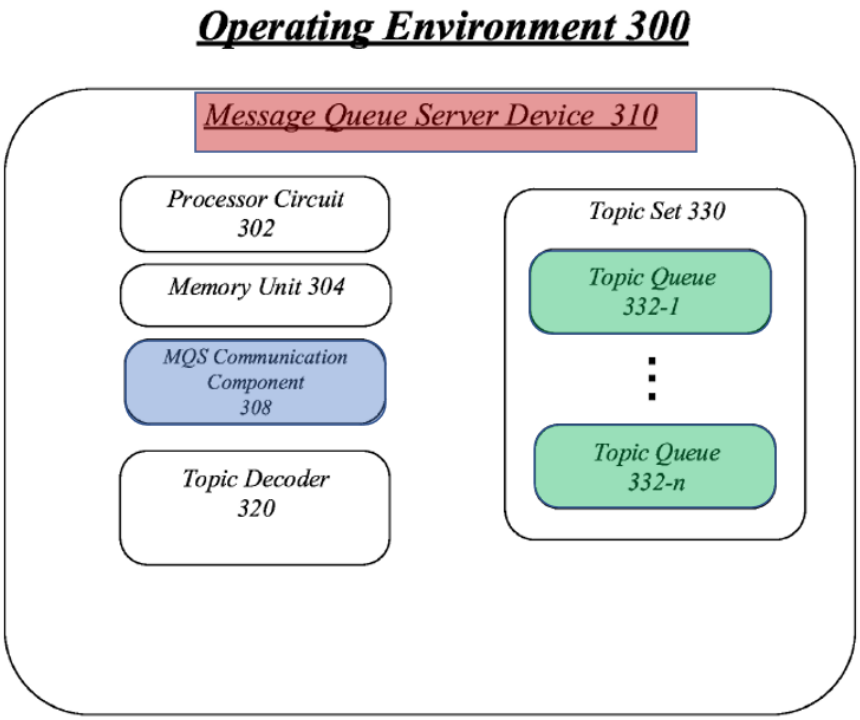

FIG. 3

Id. ¶55, Fig. 3. MQSD contains the MQS communication component which would allow the MQSD to communicate with the ERP Server, as contemplated in Spivey. *See id.* ¶¶46 (disclosing that communication component 308 transmits and receives data), 54 (disclosing that communication component 408 is analogous to 308), 55 ("LDS communication component 418 … allows [LDSD] to … transmit the data payloads to [MQSD]."); Ex.1015, Fig. 4.

672. After receiving the data, the MQSD organizes the received live data "into one or more of a plurality of topic queues" dedicated to storing information about "a specific game." *Id.* ¶¶47, 52. After sorting the data into the proper topic queues, the MQSD shares the information "substantially simultaneously" to "the subscribed connected client devices." *See id.* ¶96. Thus, it is my opinion that a POSA would have understood that Herzog's ERP server transmitting HTTPS information to Spivey's MQSD as disclosing the '697's socket server being communicatively coupled to a control server.

vii. **Limitation 1.7: "receive from the control server at least the first score information; and"**

673. In my opinion, Herzog in view of Ellis and Spivey discloses this limitation. Herzog's ERP Server "receives the meta-data from ERP generator server 49 in HTTPS communication format" and "acts as an intermediary between the ERP generator server and the origin server." Ex.1015 ¶50. Figure 4 shows that the meta-data is provided to the origin server from the ERP server in HTTPS format:

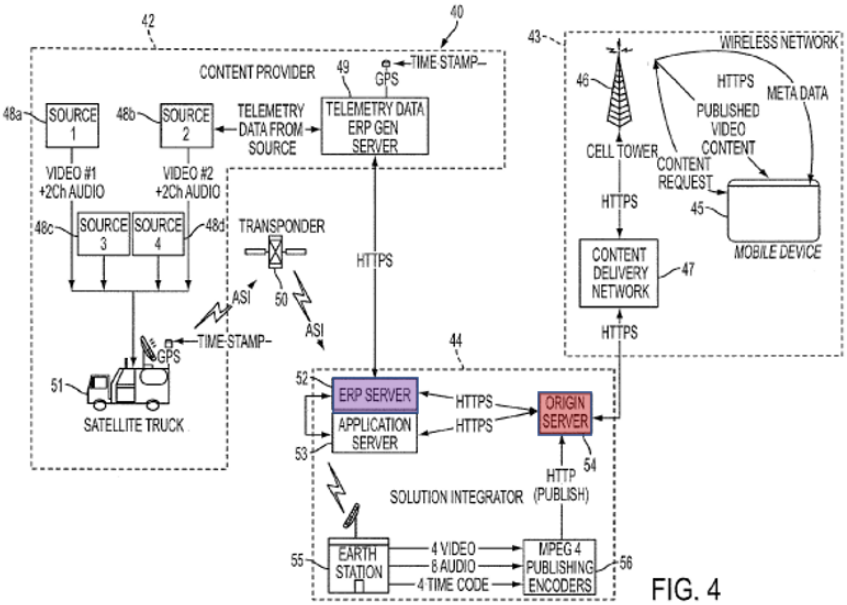

FIG. 4

Ex.1015 ¶¶50-51, Fig. 4. In my opinion, incorporating Spivey's MQSD into Herzog's origin server would thus allow the MQSD (socket server) to receive from the ERP Server (control server) the meta-data provided (first/second event/score information). Ex.1015 ¶83. Because this system includes Ellis's second event functionality, it would also include second event information. *Id.* Thus, I believe a POSA would have understood that Herzog in view of Ellis and Spivey discloses a socket server receiving from the control server at least the first score information.

viii. **Limitation 1.8: "transmit the first score information to at least the first viewer client device of the first plurality of viewer client devices via a first event information Internet communication channel between at least one first event socket of the at least one socket server and the first viewer client device of the first plurality of viewer devices, wherein the at least one first event socket corresponds to the**

first event information germane to the first live sporting event."

674. In my opinion, Herzog in view of Ellis and Spivey discloses this limitation. This limitation requires (1) a first socket on the socket server that is specifically dedicated to storing information about the first live event, (2) a first viewer client device of a group of VCDs that are watching a live stream of the first live event, and (3) transmitting event score data about the first live event from the first socket to the VCD using an internet connection. *See* Ex.1006, Claim 1. These features are shown in Figure 2:

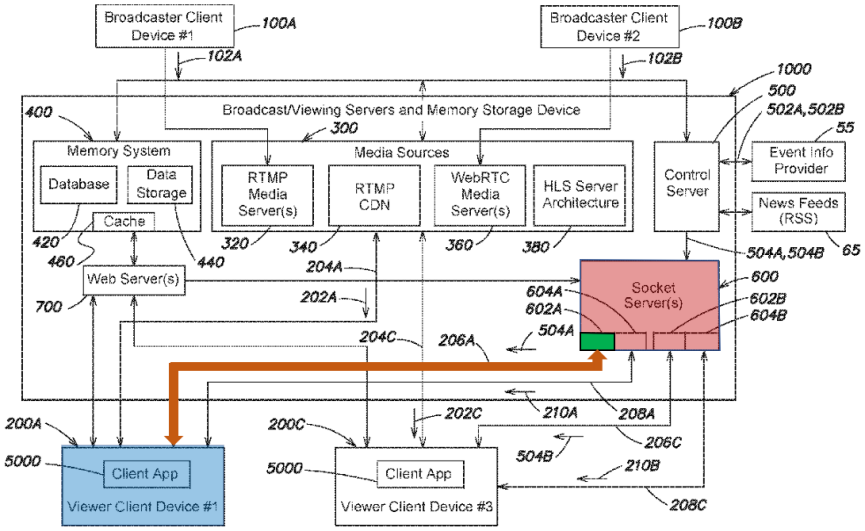

FIG. 2

Id., Fig. 2.

675. It is my opinion that a POSA would have understood that Spivey's topic queues disclose the '697's first event sockets corresponding to the first event information germane to the first live sporting event. *See* §X.C.1.a.viii.

676. As discussed in Limitations 1.3 and 1.4, Herzog discloses a first VCD of the first plurality of VCDs. *See* §X.C.3.a.iv, *supra.* In my opinion, both Herzog and Spivey further disclose transmitting the first score information to the first/second VCD of the first plurality of VCDs. For example, in Spivey, the MQSD "may push data from topic queues … to the subscribers of the topics corresponding to those topic queues." Ex.1017 ¶46. In Herzog, the Origin Server may be configured to transmit "the meta-data to the content delivery network 47," which includes car position, and the user receives "in an HTTPS communications protocol." Ex.1015 ¶¶45, 51.

677. In my opinion, Herzog in view of Spivey and Ellis discloses providing first event information over a separate internet communication channel. Spivey's entire system is based on providing "live event data in real time." Ex.1017, Abstract. The MQSD can be an "internet server." *See id.* ¶35. Spivey communicates with client devices over "any … combination of wired and/or wireless networks including … the Internet." *Id.* ¶179. For example, client devices "may request and participate in a websocket connection," which "typically comprises a two-way connection between two entities." *Id.* ¶¶43, 61. Moreover, consistent with Spivey, Herzog discloses providing event information over a separate communication path than the video signal where there is "a unique video and meta-data source that do not follow the same path of transmission:"

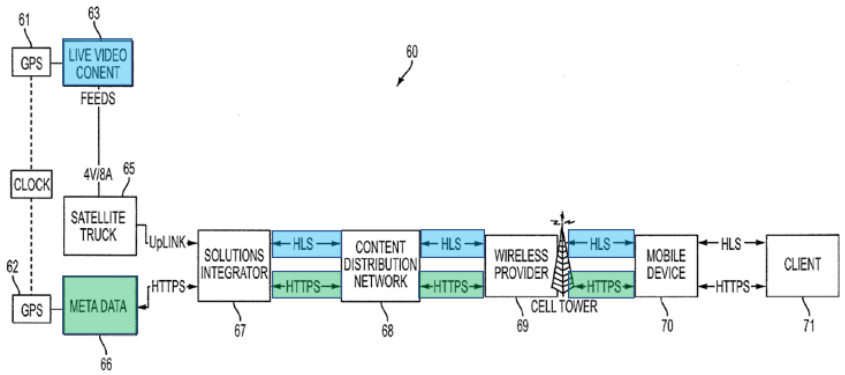

FIG. 5

Ex.1015 ¶47-51, 83, Figs. 1, 4, 6. Thus, it is my opinion that a POSA would have understood Spivey to disclose transmitting first score information via a separate internet connection.

678. Further, in my opinion this information is provided via a connection between a topic queue and the first user equipment device. Users can access the MQSD using a URL. *See* Ex.1017 ¶¶81-82. Then, the user can access the specific topic queue she wishes to receive information from by using a text string, *e.g.*, a topic label or Event ID, associated with a topic queue. *Id.* ¶179, Fig. 9 ("Gamecenter.nfl.ravenssteelers."). Thus, it is my opinion that a POSA would have understood that Herzog in view of Ellis and Spivey discloses distributing event information from a socket to a user device over an internet connection. Further, I believe that a POSA would have understood that the internet connection is established using a URL and text string identifying a uniquely addressable communication endpoint on the MQSD, where first event information is transmitted to a VCD.

b. Dependent Claim 2

i. **Limitation 2.0: "The system of claim 1, wherein:"**

679. *See* Claim 1. §X.C.3.a, *supra*.

ii. **Limitation 2.1: "the first live sporting event video-based commentary included in the first broadcaster's live stream of digital content from the first broadcaster client device, and the second live sporting event video-based commentary included in the second broadcaster's live stream of digital content from the second broadcaster client device, both relate to the first live sporting event;"**

680. In my opinion, Herzog discloses a broadcasting system where the first/second live sporting event video-based commentary included in the first/second broadcaster's live stream or digital content from the first/second broadcaster client device both relate to the first live sporting event because in one embodiment, "four video/audio streams" are provided from the same live sporting event, e.g., an "Indy Race." Ex.1015 ¶46. Herzog explains that "any number of [] sources may be available" from the same event. Ex.1015 ¶46. Examples of this video include "live videos of four of the drivers inside their respective vehicles" or may be "multiple video/audio streams of race cars and drivers, as they are imaged at different locations on the race track." *Id.* ¶¶45, 80. User devices can "initiate[] a video request of one or more channels of video/audio for viewing a live event on the device display." *Id.* ¶70. The live stream is then "published" to the user device via "content delivery

network 47" using "an HTTPS Live Streaming (HLS)-based media streaming communications protocol." Ex.1015 ¶¶51, 55. Thus, it is my opinion that Herzog in view of Ellis discloses this limitation.

iii. **Limitation 2.2: "in C), the at least one socket server further transmits the first score information for the first live sporting event to at least the first viewer client device of the second plurality of viewer client devices via a second event information Internet communication channel between the at least one first event socket of the at least one socket server and the first viewer client device of the second plurality of viewer devices."**

681. In my opinion, Herzog in view of Ellis and Spivey discloses this limitation. Spivey discloses the at least one socket server, transmitting first score information for the first live sporting event via an event information Internet communication channel between the at least one first event socket of the at least one socket server and the first VCD of a plurality of VCDs. *See* §X.C.3.a, *supra*. Here, the claim requires providing the same score information, over a separate connection, between the first event information socket to another user, who is watching a different broadcaster's live stream of the same live event, such as one of the videos from Herzog's "Indy Race." Ex.1006, Claim 2.

682. Herzog in view of Ellis discloses multiple groups watching different live streams of digital content of the same game. §X.C.3.b.ii, *supra*. Further, Spivey discloses transmitting "data from topic queues … to the subscribers of the topics

corresponding to those topic queues" on individual internet connections. Ex.1017 ¶46; *see* §X.C.3.a.viii, *supra*. Thus, it is my opinion that a first viewer from the second plurality, *i.e.*, a viewer watching video stream two from the Indy Race, would receive the race updates, *e.g.*, car position, acceleration, over a separate internet connection, between her device to the first event socket, *i.e.*, the topic queue.

c. Dependent Claim 3

i. Limitation 3.0: "The system of claim 2, wherein:"

683. *See* Claim 2. §X.C.3.b, *supra*.

ii. Limitation 3.1 & 3.2: "none of the first score information of the first event information is included in the first copy of the first plurality of copies of the first broadcaster's live stream of digital content provided to the first viewer client device of the first plurality of viewer client devices via the first video Internet communication channel; and"
"none of the first score information of the first event information is included in the first copy of the second plurality of copies of the second broadcaster's live stream of digital content provided to the first viewer client device of the second plurality of viewer client devices via the second video Internet communication channel."

684. As explained in Claims 1 and 2, Herzog in view of Ellis discloses that the Encoders first stream "video content with timecode to the content delivery network on command from the mobile device." Ex.1015 ¶¶49, 51. The available video streams include "a camera positioned inside a race car" or "video/audio

streams of race cars and drivers, as they are imaged at different locations on the racetrack." *Id.* ¶¶45-46. It is my opinion that a POSA would have understood that these video streams do not include any first score information as contemplated by the '697, and are simply two different broadcaster's video-based commentary streams of the same live event, to multiple different users over individual connections. S*ee* Ex.1015, Figs. 4, 5. Only after the first copies of the video live streams are received by the users does the system even provide the available meta-data (event information) list for users to select. *See* Ex.1015 ¶51. Thus, I believe a POSA would have understood Herzog to disclose a system that does not provide score information in the first copies of live streams of digital content provided via video internet communication channels.

d. Dependent Claim 4

i. Limitation 4.0: "The system of claim 2, wherein:"

685. *See* Claim 2. §X.C.3.b, *supra*.

ii. Limitation 4.1: "in A), the plurality of media sources:"

686. *See* Limitation 1.1. §X.C.3.a.ii, *supra*.

iii. Limitation 4.2 & 4.3: "provide a second copy of the first plurality of copies to a second viewer client device of the first plurality of viewer client devices via a third video Internet communication channel between the plurality of media sources and the second viewer client device of the first plurality of viewer client

devices; and"
"provide a second copy of the second plurality of copies to a second viewer client device of the second plurality of viewer client devices via a fourth video Internet communication channel between the plurality of media sources and the second viewer client device of the second plurality of viewer client devices; and"

687. In my opinion, Herzog in view of Ellis and Spivey discloses these limitations. These limitations require providing a second copy, *i.e.*, another copy, of the first/second plurality of copies to a second VCD of the first/second VCDs via a third/fourth connection:

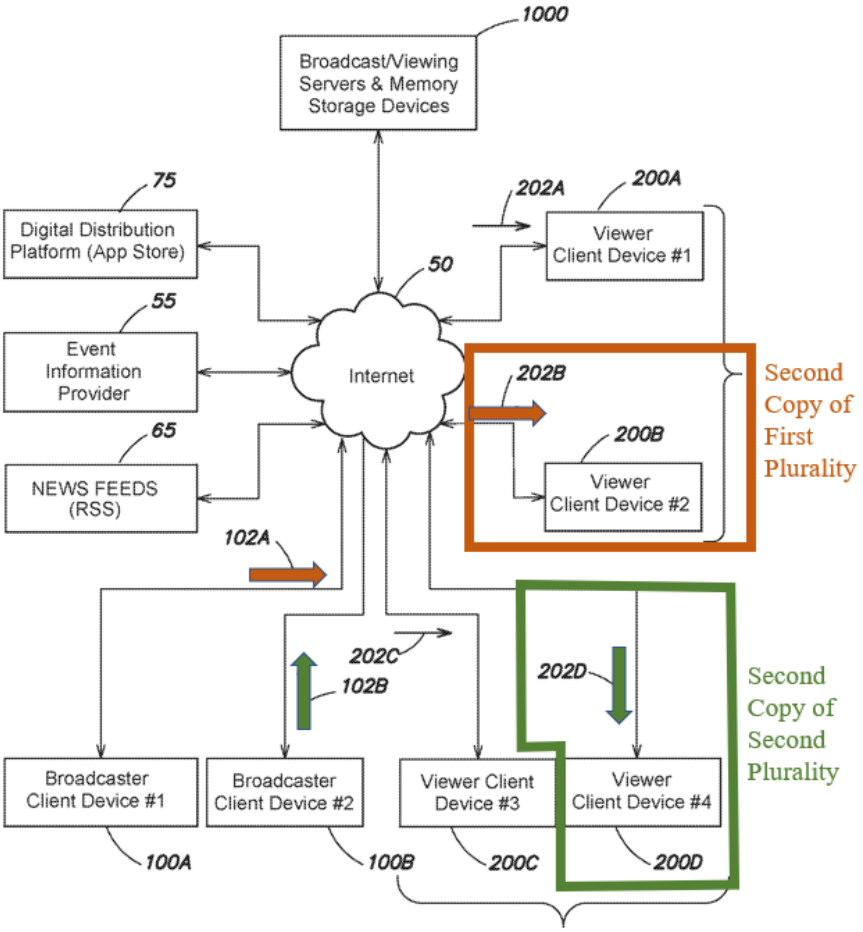

Ex.1006, 15:11-22, Fig. 1A.

688. In my opinion, Herzog discloses these limitations for the same reasons as discussed in section X.C.3.a.iv, *supra.* Specifically, Herzog in view of Ellis discloses providing individual copies, to multiple different users, of multiple different broadcaster's live streams of digital content, related to the same game, over individual "video" internet connections. §§X.C.3.a.iv, X.C.3.b, *supra*.

iv. **Limitation 4.4: "in C), the at least one socket server:"**

689. *See* Limitation 1.6. §X.C.3.a.vi, *supra.*

v. **Limitation 4.5 & 4.6: "transmits at least the first score information of the first event information to the second viewer client device of the first plurality of viewer client devices via a third event information Internet communication channel between the at least one first event socket of the at least one socket server and the second viewer client device of the first plurality of viewer devices; and" "transmits at least the first score information of the first event information to the second viewer client device of the second plurality of viewer client devices via a fourth event information Internet communication channel between the at least one first event socket of the at least one socket server and the second viewer client device of the second plurality of viewer devices."**

690. In my opinion, Herzog in view of Ellis and Spivey discloses these limitations. These limitations are substantially the same as limitations 1.8 and 2.2.

§§X.C.3.a.viii, X.C.3.b.iii. These limitations simply add transmitting the first score information of the first event information, to a second VCD, of the same first/second plurality of VCDs.

691. In my opinion, both Herzog and Spivey further disclose transmitting the first score information of the first event information to the second VCD of the previously mentioned first/second plurality of VCDs. For example, in Spivey, the MQSD "may push data from topic queues … to the subscribers of the topics corresponding to those topic queues." Ex.1017 ¶46. In Herzog, the meta-data is provided "to users/consumers of the content." Ex.1015 ¶¶49, 51; *see id.* ¶74 (discussing that users receive the meta-data "associated with … a particular video channel"). Thus, it is my opinion that a POSA would have understood that Herzog and Spivey both disclose these limitations because both disclose transmitting the first event information to multiple VCDs of the first/second plurality of VCDs.

e. Dependent Claim 5

i. Limitation 5.0: "The system of claim 2, wherein in C), the at least one socket server further:"

692. *See* Claim 2. §X.C.3.b, *supra*.

ii. Limitation 5.1 & 5.2: "transmits and receives first chat information regarding the first live sporting event video-based commentary included in the first broadcaster's live stream of digital content via at least one first chat/system event Internet communication channel between at least one first chat/system event socket of the

at least one socket server and the first viewer client device of the first plurality of viewer client devices, wherein the at least one first chat/system event socket corresponds to the first chat information regarding the first live sporting event video-based commentary; and" "transmits and receives second chat information regarding the second live sporting event video-based commentary included in the second broadcaster's live stream of digital content via at least one second chat/system event Internet communication channel between at least one second chat/system event socket of the at least one socket server and the first viewer client device of the second plurality of viewer client devices, wherein the at least one second chat/system event socket corresponds to the second chat information regarding the second live sporting event video-based commentary."

693. In my opinion, Herzog in view of Ellis and Spivey discloses these limitations. I believe that Herzog in view of Ellis and Spivey discloses transmitting information via individual communication channels between a socket and a first VCD of a first/second plurality of VCDs who are watching the same event. §§X.C.3.a.viii, X.C.3.b.iii, *supra*. The '697 explains that this chat/system event communication channel may be any generic internet communication channel. Ex.1006, 5:29-36. These limitations only further require that the system "transmits and receives" first/second "chat information regarding" the first/second "live stream of digital content" over another separate, individual connection between a first/second "chat/system event socket" and a first/second VCD:

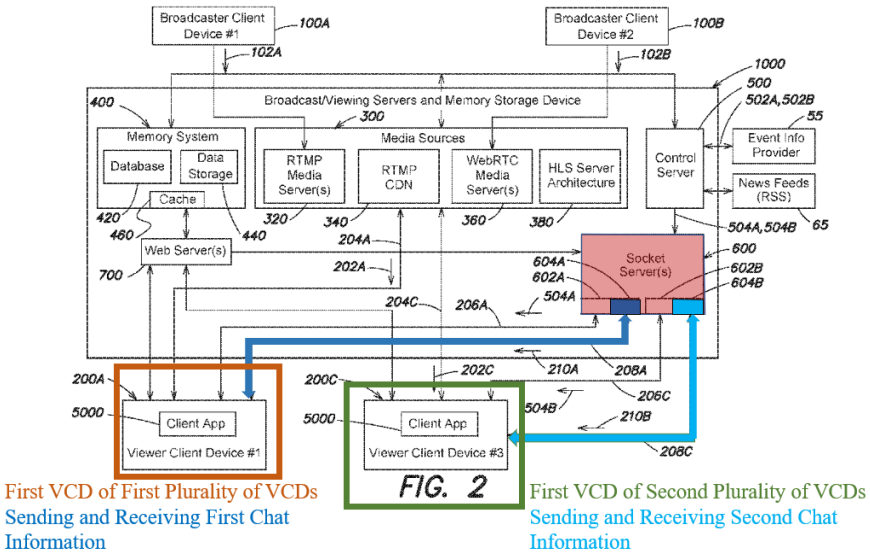

Ex.1006, 22:7-39, Claim 5, Fig. 2. In sum, the '697 explains that these limitations require that chat information is transmitted and received over a third communication channel from another socket that is dedicated for chat/system information.

694. In my opinion, Ellis discloses chat information because users "may also leave feedback regarding the commentary that other users in the media system may view when they access the same commentary." Ex.1016 ¶132. Thus, I believe a POSA would have understood that Herzog in view of Ellis and Spivey discloses a system that transmits and receives first/second chat information regarding the first/second live stream of digital content. *See* Ex.1016 ¶126 ("To create and send a message (e.g., instant message or email message), the user may select send message option.").

695. In my opinion, Ellis, consistent with Herzog's separate meta-data stream, also discloses providing this event data and chat information on a separate

channel to users. *See* Ex.1015 ¶¶49-53, 59-61, Fig. 5; Ex.1016 ¶¶39-41, Fig. 1. Ellis discusses transmitting the video "broadcasts" over communication path 150 and "game summary information, … and any other sports-related information" over communication path 152. Ex.1016 ¶41; *see* §X.B.3.c.ii. Consistent with Herzog, Ellis provides that in "some embodiments, this sports-related information is provided to user equipment 102 as a plurality of real-time data feeds." Ex.1016 ¶41. Thus, it is my opinion that a POSA would have understood that Herzog in view Ellis of Spivey discloses transmitting via at least one first/second chat/system event Internet communication channel between at least one first/second chat/system event socket of the at least one socket server and the first VCD of the first/second plurality of VCDs.

696. In my opinion, Herzog in view of Ellis and Spivey discloses a socket specifically designated for chat information. Spivey, for example, discloses a first/second chat/system event socket corresponding to the first/second chat information. *See* §X.B.1.d .

f. Dependent Claim 6

i. Limitation 6.0: "The system of claim 5, wherein:"

697. *See* Claim 5. §X.C.3.e, *supra*.

ii. Limitation 6.1: "in A), the plurality of media sources:"

698. *See* Limitation 1.1. §X.C.3.a.ii, *supra.*

iii. **Limitation 6.2 & 6.3: "provide a second copy of the first plurality of copies to a second viewer client device of the first plurality of viewer client devices via a third video Internet communication channel between the plurality of media sources and the second viewer client device of the first plurality of viewer client devices; and"**
"provide a second copy of the second plurality of copies to a second viewer client device of the second plurality of viewer client devices via a fourth video Internet communication channel between the plurality of media sources and the second viewer client device of the second plurality of viewer client devices; and"

699. *See* Limitations 4.2 and 4.3. §X.C.3.d.iii, *supra*.

iv. **Limitation 6.4: "in C), the at least one socket server:"**

700. *See* Limitation 1.6. §X.C.3.a.vi, *supra*.

v. **Limitation 6.5 & 6.7: "transmits at least the first score information of the first event information to the second viewer client device of the first plurality of viewer client devices via a third event information Internet communication channel between the at least one first event socket of the at least one socket server and the second viewer client device of the first plurality of viewer devices;"**
"transmits at least the first score information of the first event information to the second viewer client device of the second plurality of viewer client devices via a fourth event information Internet communication channel between the at least one first event socket of the at least one socket server and the second viewer client

device of the second plurality of viewer devices; and"

701. *See* Limitations 4.5 and 4.6. §X.C.3.d.v, *supra*.

vi. **Limitation 6.6 & 6.8: "transmits and receives the first chat information regarding the first live sporting event video-based commentary included in the first broadcaster's live stream of digital content via at least one third chat/system event Internet communication channel between the at least one first chat/system event socket of the at least one socket server and the second viewer client device of the first plurality of viewer client devices;"**
"transmits and receives the second chat information regarding the second live sporting event video-based commentary included in the second broadcaster's live stream of digital content via at least one fourth chat/system event Internet communication channel between the at least one second chat/system event socket of the at least one socket server and the second viewer client device of the second plurality of viewer client devices."

702. *See* Limitations 5.1 and 5.2. §X.C.3.e.ii, *supra*.

g. Dependent Claim 7

i. **Limitation 7.0: "The system of claim 1, further comprising a memory system communicatively coupled to the control server, the memory system including a database, wherein in B) the control server:"**

703. *See* Claim 1. §X.C.3.a. Additionally, in my opinion Herzog in view of Ellis and Spivey discloses this limitation. It is my opinion that Herzog and Spivey both disclose a memory system, including a database, communicatively coupled to

the ERP server (control server). The '697 explains that the database must be capable of storing "information." *See* Ex.1006, 17:38-45. Thus, I believe a POSA would have understood that the '697's database is a generic server where an organized collection of structured data is stored.

704. Herzog explains that first the meta-data (event information) is "sent to the ERP server." Ex.1015 ¶67. Second, the client requests and "receives the HLS video." *Id.*¶73. Third, a "user initiates a request for meta-data that is associated with the VITC time stamp of a particular video channel on the display of the video player." *Id.* ¶74. Only then, does Herzog's ERP Server in "response to the request for meta-data" "transmit[] the meta-data with a corresponding .JSON time stamp of the live event." *Id.* ¶¶74-76. Thus, Herzog's ERP server stores the meta-data until a user requests the data. S*ee* Ex.1015 ¶¶67-77. In my opinion, this information would be organized and stored on a "database," because "functions relating to" distributing content "may be implemented on computers" that operate "as the various servers" implementing "database functions." *See* Ex.1015 ¶¶83, 85-86 (discussing that all servers contain a "data storage" that can be "implemented in a distributed fashion on a number of similar platforms"). Thus, it is my opinion that a POSA would have understood that Herzog's database discloses memory systems including a database communicatively coupled to the control servers.

ii. **Limitation 7.1-7.7: "retrieves from the event information provider first event data for the**

first live sporting event, the first event data including at least one of:" "the type of the first live sporting event;" "an event identifier (EventID) for the first live sporting event;" "a status of the first live sporting event;" "progress details for the first live sporting event;" "a date and/or time of the first live sporting event; and" "event participant data regarding participants in the first live sporting event;"

705. In my opinion, Herzog in view of Ellis and Spivey discloses these limitations. These limitations require a control server to retrieve first event data for the first live sporting event including at least one of an event identifier (*e.g.*, source ID, topic label), a status of the live event, progress details, a date and/or time, and event participation data as explained above. Ellis discloses retrieving, among other data, at least the time remaining (progress details), quarter (status), down, and yards remaining. Ex.1016 ¶72, Fig 4. Ellis also discusses providing a "program schedule" (date/time), source ID (event identifier), and type of event, e.g., "college football." Ex.1016 ¶3, Fig. 2B, 22. Additionally, Herzog also retrieves meta-data including time information (date and/or time), "varying parameters regarding the status of each car and driver in the race" (progress details/score), "lap number" (status), "car speed and acceleration" (participant data). Ex.1015 ¶¶17, 45, 58. Spivey discloses retrieving, among other data, at least a score, an injury, an error, a name of the player that scored or made a play (participant data). Ex.1017 ¶66. The '697 explains that this limitation is broad and meant to include the disjunctive or conjunctive reading.

Ex.1006, 56:39-57:10. Thus, in my opinion Herzog in view of Ellis and Spivey discloses these limitations. S*ee* §X.C.3.a.v, *supra*.

iii. **Limitation 7.8 & 7.9: "normalizes at least the date and/or time of the first live sporting event to a reference standard time to provide a normalized date and/or time; and" "stores the first event data and the normalized date and/or time in the database."**

706. In my opinion, Herzog in view of Ellis and Spivey renders this limitation obvious. Herzog discloses storing the first event data, including date and/or time data in the database. §X.C.3.g.i, *supra*. Normalizing the date/time means nothing more than "converting" the event data "from UTC to EST/EDT" *i.e.*, a "particular reference frame." Ex.1006, 47:41-61. In any system that provides event data about multiple different live events to users that are not restricted geographically, such as the system presented in this ground, a content and meta-data distribution system of multiple live events, in my opinion it would have been obvious and standard to first convert the time stamps to a local time before storing the data, *i.e.*, normalize the data to a standard time.

707. In my opinion, normalizing, *i.e.*, converting the time stamp, is particularly obvious in this content distribution system, where Ellis contemplates using this data to allow users to place bets. *See* Ex.1016 ¶13. It is my opinion that a POSA would structure such a system to reduce formatting and conversion errors, such that as many conversions as possible would be under the control of the

centralized system, *e.g.*, the database, rather than at the user device level. Allowing the user device level access increases the risk that a user device could be modified such as to set the betting ticket entry time so that the user could place bets during time frames when bets should be disabled, *e.g.*, after the betting window ended. Thus, in my opinion Herzog in view of Ellis and Spivey render this limitation obvious. *Id.*

h. Dependent Claim 8

i. **Limitation 8.0: "The system of claim 7, wherein in B), the control server further:"**

708. *See* Claim 7. §X.C.3.g, *supra*.

ii. **Limitation 8.1 & 8.2: "normalizes at least one of the progress details for the first live sporting event and the event participant data regarding participants in the first live sporting event; and"**
"stores the normalized at least one of the progress details and the event participant data in the database."

709. *See* Claim 7. §X.C.3.g, *supra*. These limitations are substantially the same as limitations 7.8 and 7.9, except these limitations also require the control server to normalize and store progress details and event participant data. In my opinion, Herzog in view of Ellis and Spivey's system contains all of this information and would normalize/store the information for the same reasons as stated above. §X.C.3.g, *supra*. Thus, Herzog in view of Ellis and Spivey renders these limitations obvious. *See* §X.C.3.g.iii.

i. Dependent Claim 9

i. Limitation 9.0: "The system of claim 7, wherein:"

710. *See* Claim 7. §X.C.3.g, *supra*.

ii. Limitation 9.1: "the progress details include the first score information;"

711. Herzog discloses that the system provides racer's "status of each car and driver in the race" including "lap number, car speed and acceleration, tire pressure, etc." as well as "many as 50 different parameters that are available." Ex.1015 ¶¶45. In my opinion, if this disclosure does not disclose a score, then it would be obvious to track the score in a sporting event. Also, Ellis discloses this function, providing "detailed game information," which includes the score:

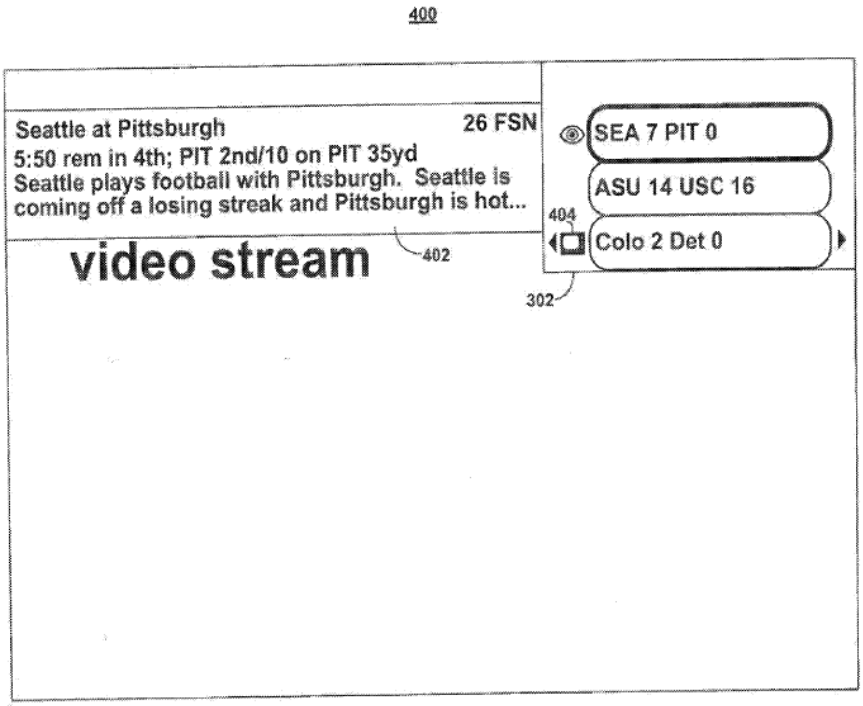

FIG. 4

Ex.1016 ¶72, Fig. 4. Moreover, Spivey discloses providing the score. Ex.1017 ¶48, Fig. 10. Thus, it is my opinion that a POSA would have understood that Herzog, Spivey, and Ellis all disclose progress details, *i.e.*, one or more items about a moment in a live event, that include the first score information.

iii. **Limitation 9.2: "the control server periodically retrieves the progress details from the event information provider and updates the first score information; and"**

712. In my opinion, Herzog discloses this limitation. Herzog discloses a control server (ERP Server) periodically updating/retrieving real-time information from the event information provider (ERP Gen Server) that includes progress details. *See* Ex.1015 ¶48-50; *see also*, Ex.1017 ¶48 (disclosing a score, play, error, and at-bat updates); §§X.C.3.a.v, X.C.3.i.ii, *supra*. Further, it would have been obvious to track the score in a sporting event, especially in this system of Herzog in view of Spivey and Ellis because Spivey and Ellis discuss tracking/updating score information. *Id.* ¶83. The only remaining portion of this limitation is that the system needs to "update the first event information." In my opinion, this limitation requires that the system update the database of Claim 7 with the progress details that were just retrieved, including score information. Therefore, Herzog in view of Ellis and Spivey discloses this limitation for the same reasons it discloses "stor[ing] the first event data … in the database." §X.C.3.i.i, *supra*.

iv. **Limitation 9.3: "for each update of the first score information, the control server queues an asynchronous message including the updated first score information for transmission to the at least one first event socket of the at least one socket server."**

713. In my opinion, Herzog in view of Ellis and Spivey discloses this limitation. The term "asynchronous message" is only used in the '697's claims. *See* Ex.1006, Claim 9. But the '697 does discuss an "asynchronous queue" as a set of "tasks to process" that can either be small "(e.g., at any given second it may be between 0-10 items)" but can "grow [] to a larger size (e.g., 1000 items)." *Id.,* 48:43-53. Thus, it is my opinion that a POSA would have understood that this limitation requires that for each first event information update at the control server, the control server readies a delayed message including the first score information, that will be processed and sent to the socket server's first event socket in turn.

714. In my opinion, Herzog's ERP server delays updates to the Origin (socket) server in the same way as the '697. For example, the ERP server receives all the meta-data from the ERP generator server. *See* Ex.1017 ¶50. The ERP server cannot stream all the retrieved data to the origin server, however, because some of the meta-data is sensitive competition data, *e.g.*, tire pressure, as compared to certain advanced analytics that can be publicly reported. Thus, the ERP server must first "filter and eliminate contents of meta-data." *Id.* Only afterwards, can the ERP server provide the delayed information update to the origin server, i.e., the socket server.

Id. Thus, it is my opinion that a POSA would have understood that this meta-data (score information) update is an asynchronous message that includes the updated meta-data that is transmitted to the origin server (first event socket).

j. Independent Claim 19

i. **Limitation 19.0: "A system for providing a first plurality of copies of a first broadcaster's live stream of digital content including first video-based commentary about a first live sporting event from a first broadcaster client device to a first plurality of viewer client devices, and for providing a second plurality of copies of a second broadcaster's live stream of digital content including second video-based commentary about a second live sporting event from a second broadcaster client device to a second plurality of viewer client devices, the system comprising:"**

715. In my opinion, Herzog in view of Ellis discloses this limitation. Herzog provides "live video and audio data" to user devices over a "communication network." *See* Ex.1015, Abstract. Herzog improves on traditional "sports application systems" where the meta-data is included "as part of the video broadcast." Ex.1015 ¶83. As would be obvious, broadcasts include broadcaster's video-based commentary. Herzog's includes providing "multiple video/audio streams of race cars and drivers, as they are imaged at different locations on the race track:"

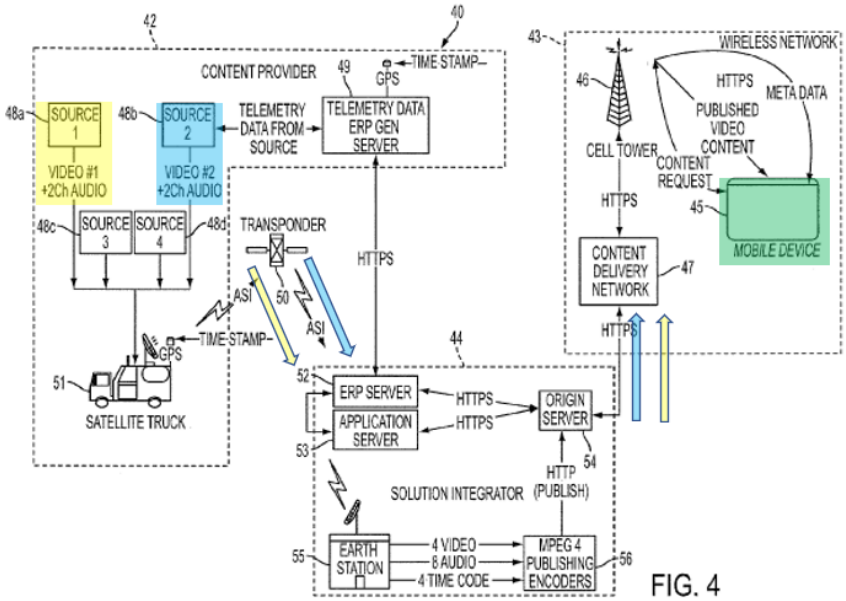

FIG. 4

Ex.1015 ¶45, Fig. 4. The above system focuses on one live event, an Indy Car Race but can be "used for any sporting event." *Id.* ¶¶45, 83. The system makes these video feeds available to "mobile stations" and other "similar users." *Id.* ¶19. Each user can then request video from "one or more channels of video/audio for viewing a live event." *Id.* ¶70. The user then "receives both the video/audio stream in an HTTPS Live Streaming (HLS)-based media streaming communications protocol." *Id.* ¶51. Thus, in my opinion Herzog provides a system where multiple different users can select the same, or different, live stream of a broadcaster's live stream of digital content that relates to a live sporting event.

716. Further, in my opinion Ellis discloses expanding on Herzog's system by providing multiple live streams of digital content that is of two different live sporting events, which would include multiple broadcasting client devices. Ex.1016. ¶¶62-63, Fig. 2B. Thus, in my opinion, Herzog and Ellis provide a system where a

plurality of different users can receive the same, or different, pluralities of copies of a first/second broadcaster's live stream of digital content including first/second live sporting event video-based commentary from a first/second broadcaster client device to a first/second plurality of VCDs. In my opinion, Herzog and Ellis disclose this limitation. *See* §X.C.3.a, *supra*.

ii. **Limitation 19.1: "A) a plurality of media sources to:"**

717. In my opinion, Herzog discloses this limitation. Herzog discloses multiple MPEG 4 Publishing Encoders ("Encoders") as a plurality of media sources. Ex.1015 ¶48. Just like in the '697 Patent, these encoders receive all of the video and audio data from the live event, such as the Indy Car Race. *Id.* ¶¶46 (noting that any form of communication technologies may be used to send the video/audio data to MPEG Publishing Encoders), 49. The Encoders can "encode" the video and audio data and then the "encoded video is then published to the content delivery network 47 (for example) via IP utilizing [] HLS." *Id.* ¶¶49, 55. Moreover, as explained below, it is my opinion that Herzog's content sources perform the same functions as the media sources as recited in limitations 19.2-19.4, and thus Herzog discloses this limitation.

iii. **Limitation 19.2: "receive the first broadcaster's live stream of digital content and the second broadcaster's live stream of digital content;"**

718. In my opinion, Herzog discloses this limitation. Herzog's Encoders receive all the video and audio data from the live event, such as the Indy Car Race. Ex.1015 ¶49. Herzog discloses that the audio and video data can be provided to the Encoders using "communications technologies for communicating multiple video and audio streams." *Id.* ¶46. As discussed above in Limitation 19.0, this would be a first/second broadcaster's live stream of digital content. Thus, it is my opinion that Herzog in view of Ellis discloses content sources that receive multiple (first/second and so on and so forth) broadcaster's live streams of digital content and distribute that content to user equipment.

iv. **Limitations 19.3 & 19.4: "provide a first copy of the first plurality of copies to a first viewer client device of the first plurality of viewer client devices via a first Internet communication channel between the plurality of media sources and the first viewer client device of the first plurality of viewer client devices;" "provide a first copy of the second plurality of copies to a first viewer client device of the second plurality of viewer client devices via a second Internet communication channel between the plurality of media sources and the first viewer client device of the second plurality of viewer client devices;"**

719. In my opinion, Herzog in view of Ellis discloses these limitations. Herzog discloses providing multiple different users with the option to select any of the available video feeds. Ex.1015 ¶70. Ellis adds that these streams would be of different live events. §X.C.3.j.i In my opinion, it would have been obvious that in a

content distribution scheme such as Herzog in view of Ellis that provides at least four different video streams, two or more users would select a first event to stream, and two or more different users would select a second event to stream, *e.g.*, the broadcast from their favorite driver's car. Ex.1015 ¶¶46, 70. In my opinion, this would create a first and second plurality of VCDs where each plurality contains a first VCD. Thus, I believe that Herzog in view of Ellis discloses multiple first users of multiple different pluralities of VCDs.

720. Herzog further provides the selected video stream to each user individually via "an HTTPS Live Streaming (HLS)-based media streaming communications protocol." Ex.1015 ¶51. Thus, it is my opinion that a POSA would have understood that each user device receives their own copy of the video stream. This would create a plurality of copies being distributed, where the first copy is sent to the first user, and so on and so forth. Thus, it is my opinion that each user would receive an individual copy (first/second and so on and so forth) of the broadcaster's live stream of digital content.

721. In my opinion, Herzog further discloses providing video content over an Internet communication channel via HTTPS Live Streaming (HLS), i.e., an internet connection. Ex.1015 ¶51. Thus, it is my opinion that Herzog discloses that each user receives an individual copy from the Encoders over a video internet communication path (first/second) that is unique to each user device. *Id.* ¶¶2 (noting

that user devices "are used mainly for viewing published content from the Internet, such as video."), 51.

v. **Limitation 19.5: "B) a control server to periodically retrieve, via the Internet and from an event information provider, first event information germane to the first live sporting event and second event information germane to the second live sporting event; and"**

722. In my opinion, Herzog in view of Ellis both disclose this limitation. Herzog's ERP Server connects to the ERP Gen Server:

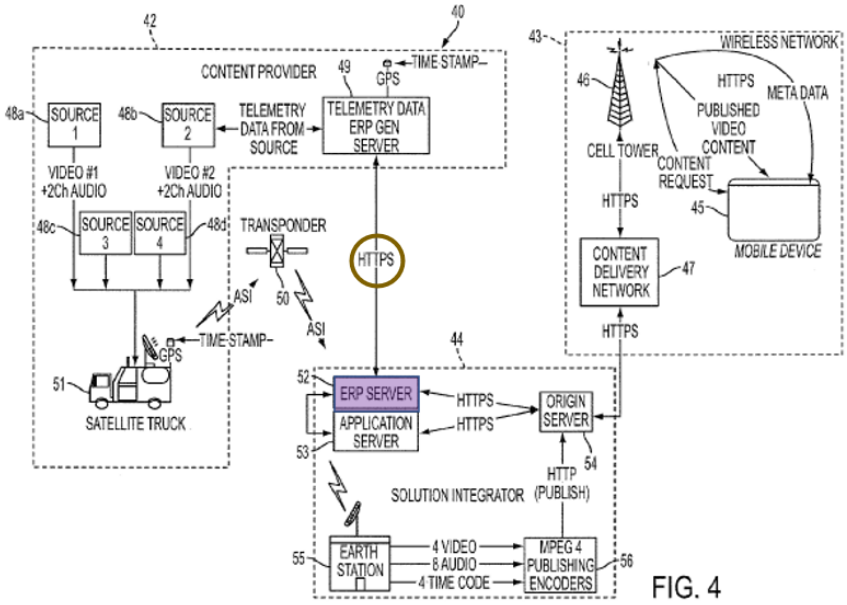

FIG. 4

Ex.1015 ¶¶45, 47, 50, Fig. 4. The ERP Server (control server) is a generic server that retrieves meta-data from the ERP Gen Server. *Id.* ¶¶16, 47, 50. It contains the same components as the control server: a processor, memory device, and communication interfaces. *Id.*, ¶13, 85-86, Fig. 8. The ERP Server "acts as an intermediary between the ERP generator server and the origin server." *Id.* ¶50. The

meta-data retrieved includes event information germane to the sporting event such as "the status of each car and driver in the race" and may include "lap number, car speed and acceleration" but there may be as many as "50 different parameters that are available." *Id.*1015 ¶45. It is my opinion that the ERP Server retrieves this first score information via the internet and from an event information provider because it retrieves the information, e.g., status of each car and driver in the race, in HTTPS format, an internet communication protocol from an ERP Server. *Id.* ¶¶17, 50.

723. Further, Ellis's SCS can be "any suitable content source configured to provide real-time sports scores and game summary information" including a "content manager, content aggregator, or intermediate content provider." Ex.1016 ¶¶41,42, 142. The SCS periodically retrieves event information germane to all live sporting events, *e.g.*, score information because the SCS may "provide real-time sports scores and game summary information, … spread and wagering data, and any other sports-related information to user equipment 102." *Id.* ¶41; *see id.* ¶¶72, 117. It is my opinion that a POSA would have understood that this information is retrieved via the internet because that is how real-time data was transferred to users at the time of Herzog, Spivey, and Ellis—including score updates and wagering information. *See* Ex.1016 ¶¶42, 142.

724. While a periodic time interval, *e.g.*, every .1 seconds, is not mentioned in Herzog, it is my opinion that a POSA would have understood that any system that

provides real-time sports statistics, such as Herzog in view of Ellis, would necessarily update the statistics on a periodic basis. A POSA would have also understood that HTTP is a pull-oriented protocol where receivers such as the ERP server need to explicitly ask for new data. To reduce latency using an HTTP connection, a POSA would have known to have Herzog's ERP server periodically check for the content availability as often as possible. Alternatively, in my opinion it would have been an obvious design choice to use a periodic update to limit queries to the system and load on the components. Thus, I believe a POSA would have understood that Herzog and Spivey both disclose this limitation.

vi. **Limitation 19.6: "C) at least one socket server communicatively coupled to the control server to:"**

725. In my opinion, Herzog in view of Ellis and Spivey discloses this limitation. Herzog in view of Ellis and Spivey discloses a socket server communicatively coupled to the control server (which, as discussed above, is disclosed by Herzog's ERP Server). Herzog discloses providing event information over a separate connection to user equipment. Ex.1015 ¶¶48-52, 67, Figs. 4, 6. That process includes the ERP Server transmitting data to the Origin Server:

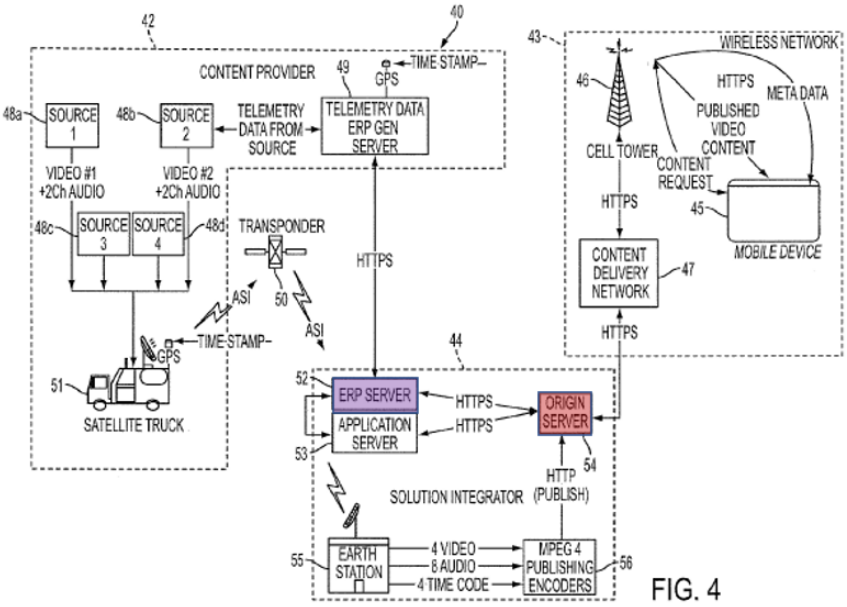

FIG. 4

Ex.1015 ¶¶50-51, Fig. 4. But in a system of Spivey combined with Ellis, as noted in Limitation 19.0, it is my opinion that a POSA would have looked to Spivey to add additional backend architecture to organize the meta-data from multiple events and reduce latency in the real-time data delivery system. Thus, I believe that a POSA would have done this by incorporating Spivey's MQSD into Herzog's Origin Server.

726. In my opinion, Spivey's MQSD is like the '697's socket server insofar as it is a generic server that contains processors, memory, and communication components. Ex.1017 ¶¶35, 53, Figs. 3, 4. Moreover, in my opinion Spivey's MQSD carries out the same purpose as the '697's socket server. §X.C.1.a.vi, *supra*. The MQSD "receive[s]" and "process[es] live data to provide live data" to "the subscribed connected client devices substantially simultaneously." *Id.* ¶36; *see id.* ¶¶45 ("[MQS] device 310 may be a representative example of message queue server

120"), 54 (describing that MQSD is "substantially similar" to "MQS device 310"), 96. To accomplish this, the MQSD receives live event data from the LDSD, which just "receive[d] live data:"

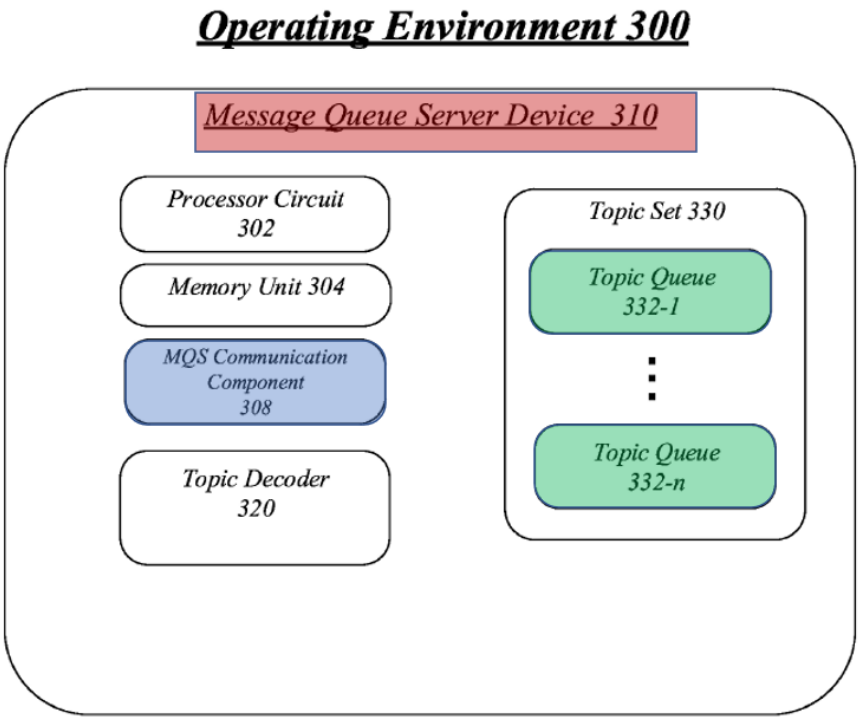

FIG. 3

Id. ¶55, Fig. 3. MQSD contains the MQS communication component which would allow the MQSD to communicate with the ERP Server, as contemplated in Spivey. *See id.* ¶¶46 (disclosing that communication component 308 transmits and receives data), 54 (disclosing that communication component 408 is analogous to 308), 55 ("LDS communication component 418 … allows [LDSD] to … transmit the data payloads to [MQSD]."); Ex.1015, Fig. 4. After receiving the data, the MQSD organizes the received live data "into one or more of a plurality of topic queues"

dedicated to storing information about "a specific game." *Id.* ¶¶47, 52. After sorting the data into the proper topic queues, the MQSD shares the information "substantially simultaneously" to "the subscribed connected client devices." *See id.* ¶96. Thus, it is my opinion that a POSA would have understood that Herzog's ERP server transmitting HTTPS information to Spivey's MQSD as disclosing the '697's socket server being communicatively coupled to a control server.

vii. **Limitation 19.7: "receive from the control server at least some of the first event information and at least some of the second event information, wherein:"**

727. In my opinion, Herzog in view of Ellis and Spivey discloses this limitation. Herzog's ERP Server "receives the meta-data from ERP generator server 49 in HTTPS communication format" and "acts as an intermediary between the ERP generator server and the origin server." Ex.1015 ¶50. Figure 4 shows that the meta-data is provided to the origin server from the ERP server in HTTPS format:

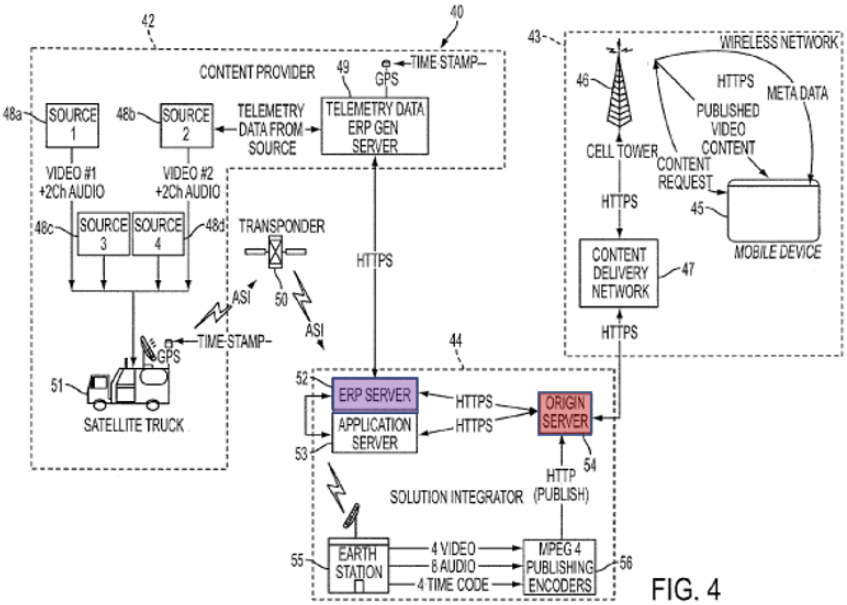

FIG. 4

Ex.1015 ¶¶50-51, Fig. 4. In my opinion, incorporating Spivey's MQSD into Herzog's origin server would thus allow the MQSD (socket server) to receive from the ERP Server (control server) the meta-data provided (first/second score information). Because this system includes Ellis's second event functionality, it would also include second event information. Thus, I believe a POSA would have understood that Herzog in view of Ellis and Spivey discloses a socket server receiving from the control server at least some of the first/second event information.

viii. **Limitations 19.8 & 19.9: "the at least some of the first event information includes first score information for the first sporting event; and" "the at least some of the second event information includes second score information for the second sporting event; and"**

728. In my opinion, Herzog in view of Ellis and Spivey discloses these limitations. The '697 explains that the "control server passes at least the first score

information" to the "socket server." Ex.1006, 21:46-59 ("[F]irst event information includes at least first score information …."). The '697 does not require any specific transmission method. *See id*. The LDSD (the control server) from Spivey "receive[s] live data and transmit[s] the data payloads to [MQSD (the socket server)]." Ex.1017 ¶55. Data payloads may include "a score, a player name, a play, and so forth …."

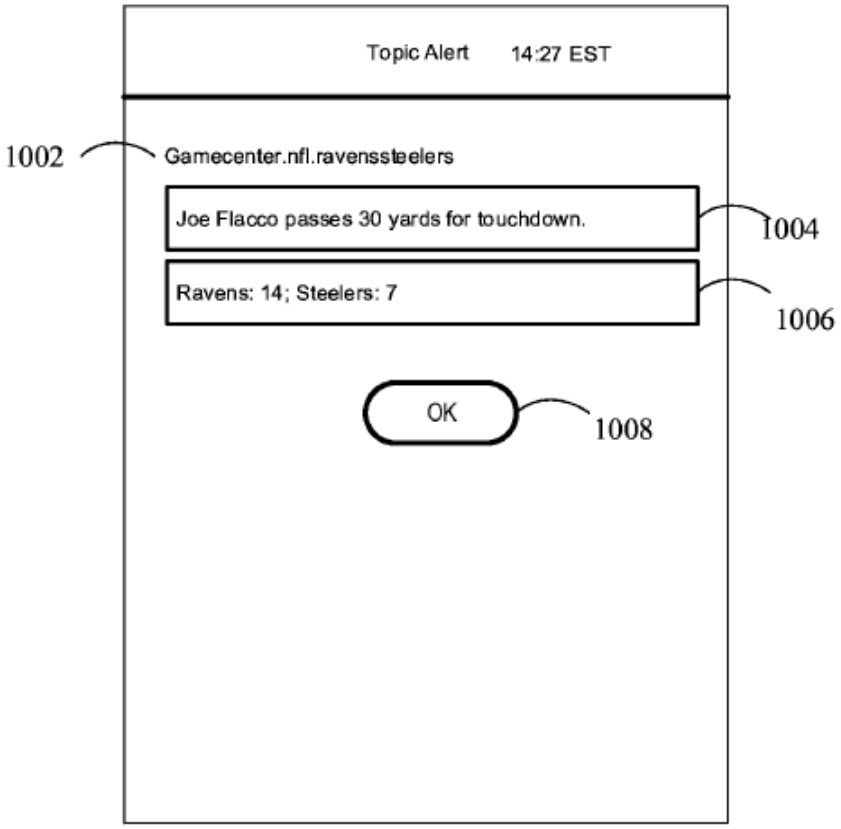

FIG. 10

Id. ¶117, Fig. 10. Thus, it is my opinion that a POSA would have understood that Spivey discloses a socket server receiving from the control server at least the

first/second event information which includes first/second score information for the first/second live sporting event.

ix. **Limitations 19.10 & 19.11: "transmit at least the first score information the at least some of the first event information to the first viewer client device of the first plurality of viewer client devices via a third Internet communication channel between at least one first event socket of the at least one socket server and the first viewer client device of the first plurality of viewer devices; and" "transmit at least the second score information of the at least some of the second event information to the first viewer client device of the second plurality of viewer client devices via a fourth Internet communication channel between at least one second event socket of the at least one socket server and the first viewer client device of the second plurality of viewer devices."**

729. In my opinion, Herzog in view of Ellis and Spivey discloses these limitations. This limitation requires (1) a first/second socket on the socket server that is specifically dedicated to storing information about the first/second live event, (2) a first/second viewer client device of a group of VCDs that are watching a live stream of the first/second live event, and (3) transmitting score data about the first/second live event from the first/second socket to the VCD using separate an internet connection. *See* Ex.1006, Claim 1. These features are shown in Figure 2:

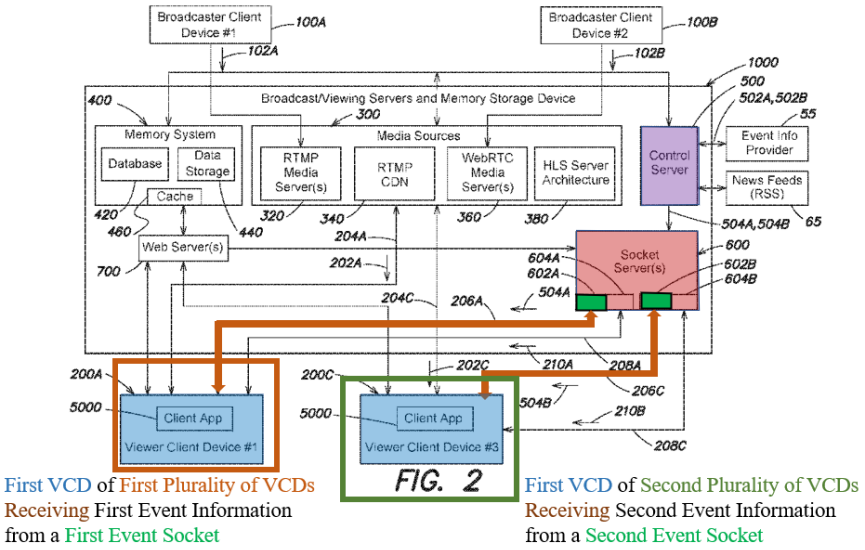

Id., Fig. 2.

730. In my opinion, a POSA would have understood that Spivey's topic queues disclose the '697's first/second event sockets corresponding to the first/second event information germane to the first/second live sporting event including first/second score information. §X.C.1.e.ix, *supra.*

731. As discussed in Limitations 19.3 and 19.4, Herzog discloses a first VCD of the first/second plurality of VCDs. *See* §X.C.3.j.iv, *supra.* In my opinion, both Herzog and Spivey further disclose transmitting the first/second score information of the at least some of the first/second event information to the first VCD of the first/second plurality of VCDs. For example, in Spivey, the MQSD "may push data from topic queues … to the subscribers of the topics corresponding to those topic queues." Ex.1017 ¶46. In Herzog, the Origin Server may be configured to transmit "the meta-data to the content delivery network 47," which

includes car position, and the user receives "in an HTTPS communications protocol." Ex.1015 ¶51. In my opinion, a POSA would have known that the websocket client-server communication protocol employed by Spivey was an alternative to Herzog's HTTP polling.

732. In my opinion, Herzog in view of Ellis and Spivey discloses providing first/second event information over separate internet communication channels, which are numbered third/fourth here. Spivey's entire system is based on providing "live event data in real time." Ex.1017, Abstract. The MQSD can be an "internet server." *See id.* ¶35. Spivey communicates with client devices over "any … combination of wired and/or wireless networks including … the Internet." *Id.* ¶179. For example, client devices "may request and participate in a websocket connection," which "typically comprises a two-way connection between two entities." *Id.* ¶¶43, 61. Moreover, consistent with Spivey, Herzog discloses providing event information over a separate communication path than the video signal where there is "a unique video and meta-data source that do not follow the same path of transmission:"

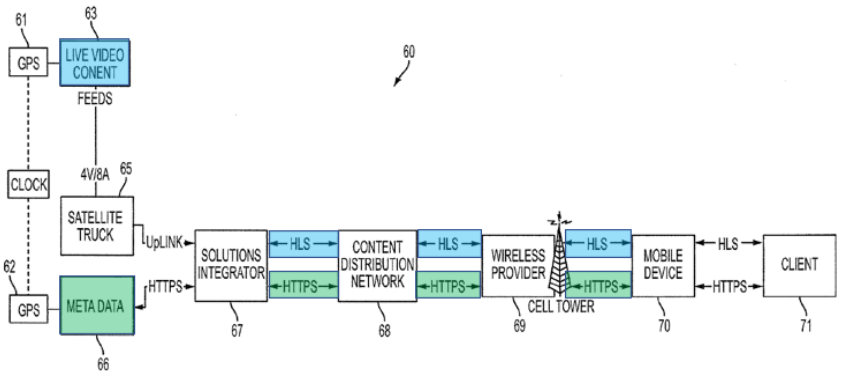

FIG. 5

Ex.1015 ¶47-51, 83, Figs. 1, 4-6. Thus, it is my opinion a POSA would have understood Herzog in view of Spivey and Ellis to disclose transmitting first/second score information via separate internet connections, which are third/fourth Internet communication channels because the devices receive the video feed over the first/second Internet communication channels. *See* §X.C.3.a.

733. Further, this information is provided via a connection between a topic queue and the first user equipment device. Users can access the MQSD using a URL. *See* Ex.1017 ¶¶81-82. Then, the user can access the specific topic queue she wishes to receive information from by using a text string, *e.g.*, a topic label or Event ID, associated with a topic queue. *Id.* ¶179, Fig. 9 ("Gamecenter.nfl.ravenssteelers."). Thus, it is my opinion that a POSA would have understood that Herzog in view of Ellis and Spivey discloses distributing first/second event information from a first/second event socket to a first/second user device over separate internet connections. Further, I believe that a POSA would have understood that the internet connection is established using a URL and text

string identifying a uniquely addressable communication endpoint on the MQSD, where first event information is transmitted to connected VCDs.

k. Dependent Claim 20

i. Limitations 20.0 & 20.1: "The system of claim 19, wherein:"
in A), the plurality of media sources:"

734. *See* Claim 19. §X.C.3.j, *supra.*

ii. Limitation 20.2 & 20.3: "provide a second copy of the first plurality of copies to a second viewer client device of the first plurality of viewer client devices via a third video Internet communication channel between the plurality of media sources and the second viewer client device of the first plurality of viewer client devices; and"
"provide a second copy of the second plurality of copies to a second viewer client device of the second plurality of viewer client devices via a fourth video Internet communication channel between the plurality of media sources and the second viewer client device of the second plurality of viewer client devices; and"

735. In my opinion, Herzog in view of Ellis and Spivey discloses these limitations. These limitations are substantially the same as limitations 19.3 and 19.4. *See* §X.C.3.j.iv, *supra*. Specifically, these limitations add providing a second copy, *i.e.*, another copy, of the first/second plurality of copies to a second VCD of the first/second VCDs via a third/fourth video Internet communication channel. *See* Ex.1006, 15:11-22, Fig. 1A.

736. In my opinion, Herzog in view of Ellis discloses these limitations for the same reasons as discussed in section X.C.3.j.iv, *supra.* Specifically, it is my opinion that Herzog in view of Ellis discloses providing individual copies, to multiple different users, of multiple different live streams of digital content, related to different live sporting events, over individual "video" internet connections. §X.C.3.j.iv, *supra*.

iii. **Limitation 20.4: "in C), the at least one socket server:"**

737. *See* Limitation 19.6. X.C.3.j.vi, *supra.*

iv. **Limitations 20.5 & 20.6: "transmits at least the first score information of the first event information to the second viewer client device of the first plurality of viewer client devices via a third event information Internet communication channel between the at least one first event socket of the at least one socket server and the second viewer client device of the first plurality of viewer devices; and" "transmits at least the second score information of the second event information to the second viewer client device of the second plurality of viewer client devices via a fourth event information Internet communication channel between the at least one second event socket of the at least one socket server and the second viewer client device of the second plurality of viewer devices."**

738. In my opinion, Herzog in view of Ellis and Spivey discloses these limitations. These limitations are substantially the same as limitations 19.10 and

19.11. §X.C.3.j.ix. These limitations simply add transmitting the first/second score information of the first/second event information, to a second VCD, of the same first/second plurality of VCDs.

739. In my opinion, Herzog in view of Ellis discloses multiple groups watching different live streams of digital content of the same game. Further, Spivey discloses transmitting "data from topic queues … to the subscribers of the topics corresponding to those topic queues" on individual internet connections. Ex.1017 ¶46; *see* §X.C.3.a.viii, *supra*. Thus, it is my opinion that a first viewer from the second plurality—*i.e.*, a viewer watching video stream two from the Indy Race—would receive the race updates—*e.g.*, car position, acceleration—over a separate internet connection between her device to the first event socket—*i.e.*, the topic queue.

740. In my opinion, Herzog in view of Ellis and Spivey further disclose transmitting the first/second score information of the first/second event information to the second VCD of the previously mentioned first/second plurality of VCDs over an individual third/fourth event Internet communication channels. For example, in Spivey, the MQSD "may push data from topic queues … to the subscribers of the topics corresponding to those topic queues." Ex.1017 ¶46. In Ellis, SCS may be configured "to provide real-time sports scores and game summary information, … to user equipment 102." Ex.1016 ¶41; *see id.* ¶39 ("Any suitable number of users

may have one or more user equipment … 102.”). Moreover, in Herzog, the meta-data is provided “to users/consumers of the content.” Ex.1015 ¶¶49, 51; *see id.* ¶74 (discussing that users receive the meta-data “associated with … a particular video channel”). Thus, it is my opinion that a POSA would have understood that Herzog in view of Spivey and Ellis discloses these limitations because both disclose transmitting the first/second event information to multiple VCDs of the first/second plurality of VCDs over separate internet connections.

l. Dependent Claim 21
Limitations 21.0-21.2: “The system of claim 19, wherein in C), the at least one socket server further: transmits and receives first chat information regarding the first live sporting event video-based commentary included in the first broadcaster's live stream of digital content via at least one first chat/system event Internet communication channel between at least one first chat/system event socket of the at least one socket server and the first viewer client device of the first plurality of viewer client devices, wherein the at least one first chat/system event socket corresponds to the first chat information regarding the first live sporting event video-based commentary; and transmits and receives second chat information regarding the second live sporting event video-based commentary included in the second broadcaster's live stream of digital content via at least one second chat/system event Internet communication channel between at least one second chat/system event socket of the at least one socket server and the first viewer client device of the second plurality of viewer client devices, wherein the at least one second chat/system event socket corresponds to the second chat information regarding the second live sporting event video-based commentary.”

741. See Claim 19. §X.C.3.j. Further, in my opinion Herzog in view of Ellis and Spivey discloses these limitations. Herzog in view of Ellis and Spivey discloses transmitting information via individual communication channels between a socket and a first VCD of a first/second plurality of VCDs who are watching different live events event. §X.B.3.a.viii, *supra*. The '697 explains that this chat/system event communication channel may be any generic internet communication channel. Ex.1006, 5:29-36. These limitations only further require that the system "transmits and receives" first/second "chat information regarding" the first/second "live stream of digital content" over another separate, individual connection between a first/second "chat/system event socket" and a first/second VCD:

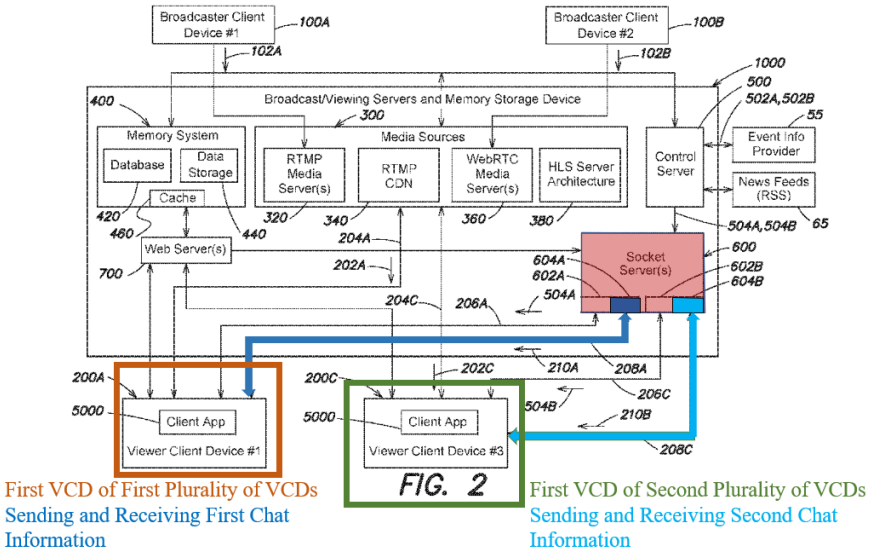

Ex.1006, 22:7-39, Claim 5, Fig. 2. In sum, the '697 explains that these limitations require that chat information is transmitted and received over a third communication channel from another socket that is dedicated for chat/system information.

742. Ellis discloses sending and receiving chat information because users "may also leave feedback regarding the commentary that other users in the media system may view when they access the same commentary." Ex.1016 ¶132. Thus, it is my opinion that a POSA would have understood that Herzog in view of Ellis and Spivey discloses a system that transmits and receives first/second chat information regarding the first/second live sporting event video-based commentary included in the first/second broadcaster's live stream of digital content. *See* Ex.1016 ¶126 ("To create and send a message (e.g., instant message or email message), the user may select send message option.").

743. Ellis, consistent with Herzog's separate meta-data stream, also discloses providing this event data and chat information on a separate channel to users. Ex.1015 ¶¶49-53, 59-61, Fig. 5; Ex.1016 ¶¶39-41, Fig. 1. Ellis discusses transmitting the video "broadcasts" over communication path 150 and "game summary information, … and any other sports-related information" over communication path 152. Ex.1016 ¶41. Consistent with Herzog, Ellis provides that in "some embodiments, this sports-related information is provided to user equipment 102 as a plurality of real-time data feeds. Ex.1016 ¶41. Thus, it is my opinion that a POSA would have understood that Herzog in view Ellis of Spivey discloses transmitting via at least one first/second chat/system event Internet communication

channel between at least one first/second chat/system event socket of the at least one socket server and the first VCD of the first/second plurality of VCDs.

744. In my opinion, Herzog in view of Ellis and Spivey further discloses a socket specifically designated for chat information when implementing Spivey's topic queue organizational structure. Spivey, for example, discloses a first/second chat/system event socket corresponding to the first/second chat information. *See* §X.B.3.a.viii, *supra*. Thus, in my opinion, a POSA would have understood Spivey to disclose a first/second chat/system event socket corresponding to the first/second chat information regarding the first/second live sporting event video-based commentary.

m. Dependent Claim 22

i. Limitation 22.0: "The system of claim 21, wherein:"

745. *See* Claim 21. §X.C.3.l, *supra*.

ii. Limitations 22.1-22.5, 22.7: "in A), the plurality of media sources: provide a second copy of the first plurality of copies to a second viewer client device of the first plurality of viewer client devices via a third video Internet communication channel between the plurality of media sources and the second viewer client device of the first plurality of viewer client devices; and provide a second copy of the second plurality of copies to a second viewer client device of the second plurality of viewer client devices via a fourth video Internet communication channel between the plurality

of media sources and the second viewer client device of the second plurality of viewer client devices; and in C), the at least one socket server: transmits at least the first score information of the first event information to the second viewer client device of the first plurality of viewer client devices via a third event information Internet communication channel between the at least one first event socket of the at least one socket server and the second viewer client device of the first plurality of viewer devices;"
"transmits at least the second score information of the second event information to the second viewer client device of the second plurality of viewer client devices via a fourth event information Internet communication channel between the at least one second event socket of the at least one socket server and the second viewer client device of the second plurality of viewer devices; and"

746. In my opinion, Herzog in view of Ellis and Spivey renders these limitations obvious. These limitations are substantially the same as limitations 20.1-20.6. Thus, a POSA would have understood that Herzog in view of Ellis and Spivey discloses these limitations for the same reasons as stated above. §§X.C.3.k.i-iv, *supra*.

iii. **Limitations 22.6 & 22.8: "transmits and receives the first chat information regarding the first live sporting event video-based commentary included in the first broadcaster's live stream of digital content via at least one third chat/system event Internet communication channel between the at least one first chat/system event socket of the at least one**

socket server and the second viewer client device of the first plurality of viewer client devices;"
"transmits and receives the second chat information regarding the second live sporting event video-based commentary included in the second broadcaster's live stream of digital content via at least one fourth chat/system event Internet communication channel between the at least one second chat/system event socket of the at least one socket server and the second viewer client device of the second plurality of viewer client devices."

747. In my opinion, Herzog in view of Ellis and Spivey renders these limitations obvious. These limitations are substantially the same as limitations 22.1 and 22.2. *See* §X.C.3.m.ii, *supra*; Ex.1006, Claim 21. But these limitations further require that the first/second chat information is sent to a second VCD of the first/second plurality of VCDs. *Id.* It is my opinion that this limitation is disclosed for the same reasons that event information being transmitted to a second VCD is disclosed in limitations 22.5 and 22.7. §X.C.3.m.ii, *supra*.

748. Thus, in my opinion a POSA would have understood that Herzog in view of Ellis and Spivey discloses these limitations for the same reasons as stated above. §X.C.3.l, *supra*.

n. Independent Claim 23

i. **Limitation 23.0: "A method for providing a first copy of a first broadcaster's live stream of digital content including first live sporting event video-based commentary from a first**

broadcaster client device to a first viewer client device, the method comprising:"

749. In my opinion, Herzog in view of Ellis and Spivey renders this limitation obvious. This limitation is substantially the same as limitation 19.0. *See* §X.C.3.j.i, *supra*. In my opinion, Claim 23 is a method claim implementing the system of Claim 19. Thus, I believe a POSA would have understood that Herzog in view of Ellis and Spivey discloses this limitation for the same reasons stated above. §X.C.3.j, *supra*.

ii. **Limitation 23.1: "A) providing the first copy to the first viewer client device via a first video communication channel between a plurality of media sources and the first viewer client device;"**

750. In my opinion, Herzog in view of Ellis and Spivey renders this limitation obvious. This limitation is substantially the same as limitation 19.3. *See* §§X.C.3.j.ii-iv, *supra*. The claim language is slightly altered, but in my opinion the claims contain the same limitations. Thus, I believe a POSA would have understood that Herzog in view of Ellis and Spivey renders this limitation obvious for the same reasons stated above. §X.C.3.j.iv, *supra*.

iii. **Limitation 23.2: "B) periodically retrieving, via the Internet and from an event information provider, first event information germane to a first live sporting event, wherein the first event information includes first score information for the first live sporting event; and"**

751. In my opinion, Herzog in view of Ellis and Spivey renders this limitation obvious. This limitation is substantially the same as limitation 19.5. *See* §X.C.3.j.v, *supra*. The claim language is slightly altered, but in my opinion the claims contain the same limitations. Thus, I believe a POSA would have understood that Herzog in view of Ellis and Spivey renders this limitation obvious for the same reasons stated above. §X.C.3.j.v, *supra*.

iv. **Limitation 23.3: "C) transmitting the first score information to at least the first viewer client device via a first event information communication channel between at least one first event socket of at least one socket server and the first viewer client device of the first plurality of viewer devices, wherein the at least one first event socket corresponds to the first event information germane to the first live sporting event."**

752. In my opinion, Herzog in view of Ellis and Spivey renders this limitation obvious. This limitation is substantially the same as limitations 19.10-11. *See* §§X.C.3.j.vi-X.C.3.j.ix, *supra*. The claim language is slightly altered, but in my opinion the claims contain the same elements. Thus, I believe a POSA would have understood that Herzog in view of Ellis and Spivey discloses this limitation for the same reasons stated above. §X.C.3.j.ix, *supra*.

o. Dependent Claim 24

i. **Limitation 24.0: "The method of claim 23, further comprising:"**

753. *See* Claim 23. §X.C.3.n, *supra*.

ii. **Limitation 24.1: "D) transmitting and receiving first chat information regarding the first live sporting event video-based commentary included in the first broadcaster's live stream of digital content via at least one first chat/system event Internet communication channel between at least one first chat/system event socket of the at least one socket server and the first viewer client device of the first plurality of viewer client devices, wherein the at least one first chat/system event socket corresponds to the first chat information regarding the first live sporting event video-based commentary."**

754. In my opinion, Herzog in view of Ellis and Spivey renders this limitation obvious. This limitation is substantially the same as limitation 21.1. The claim language is slightly altered, but in my opinion the claim contains the same limitations. Thus, I believe a POSA would have understood Herzog in view of Ellis and Spivey to disclose this limitation for the same reasons stated above. §X.C.3.l, *supra*.

p. Dependent Claim 25

i. **Limitation 25.0: "The method of claim 23, wherein B) comprises:"**

755. *See* Claim 23, §X.C.3.n, *supra*.

ii. **Limitation 25.1: "B1) periodically updating the first score information; and"**

756. In my opinion, Herzog in view of Spivey and Ellis renders this limitation obvious. This limitation is substantially the same as limitation 9.2. The claim language is slightly altered, but in my opinion the claim contains the same

limitations. Thus, I believe a POSA would have understood Herzog in view of Ellis and Spivey to disclose this limitation for the same reasons stated above. §§X.C.3.g, X.C.3.i.iii, *supra.*

iii. **Limitation 25.2: "B2) for each updating of the first score information, queueing an asynchronous message including the updated first score information for transmission to the at least one first event socket of the at least one socket server."**

757. In my opinion, Herzog in view of Ellis and Spivey discloses this limitation. The term "asynchronous message" is only used in the '697's claims. *See* Ex.1006, Claim 9. But the '697 does discuss an "asynchronous queue" as a set of "tasks to process" that can either be small "(e.g., at any given second it may be between 0-10 items)" but can "grow[] to a larger size (e.g., 1000 items)." *Id.,* 48:43-53. Thus, it is my opinion that a POSA would have understood that this limitation requires that for each first event information/score update at the control server, the control server readies a delayed message including the first score information, that will be processed and sent to the socket server's first event socket in turn.

758. In my opinion Herzog's ERP server delays updates to the Origin/MQSD (socket) server in the same way as described in the '697. For example, the ERP server receives all the meta-data from the ERP generator server. *See* Ex.1015 ¶50. The ERP server cannot stream all the retrieved data to the origin server, however, because some of the meta-data is sensitive competition data, *e.g.*,

tire pressure. *Id*. For instance, if the event information provider in a system of multiple events, like this one, would be capable of processing and providing advanced analytics, this information may or may not be public. Thus, the ERP server must first "filter and eliminate contents of meta-data." *Id.* Only afterwards, can the ERP server provide the delayed information update to the origin server, *i.e.*, the socket server. *Id.* Thus, it is my opinion that a POSA would have understood that this meta-data (event information) update is an asynchronous message that includes the updated meta-data and score information that is transmitted to the origin server/MQSD (first event socket of the at least one socket server).

q. Independent Claim 27

i. Limitation 27.0: "A system for providing a first copy of a first broadcaster's live stream of digital content including first live sporting event video-based commentary from a first broadcaster client device to a first viewer client device, the system comprising:"

759. *See* Limitation 19.0. §X.C.3.j.i, *supra*.

ii. Limitation 27.1: "means for providing the first copy to the first viewer client device via a first video communication channel;"

760. *See* Limitations 19.1-19.4. §§X.C.3.j.ii-iv, *supra*. Herzog also discloses an algorithm for providing a first copy to the first VCD via a first video communication channel. Ex.1015 ¶¶69-73.

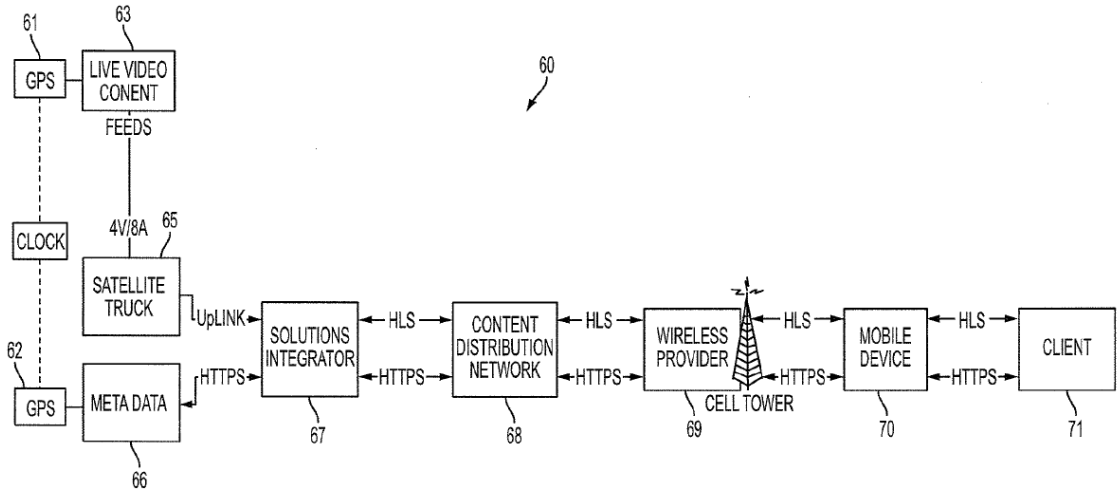

FIG. 5

Ex.1015, Fig. 5.

iii. **Limitations 27.2 & 27.3: "means for periodically retrieving, via the Internet and from an event information provider, first event information germane to a first live sporting event, wherein the first event information includes first score information for the first live sporting event; and"**
"means for transmitting the first score information to at least the first viewer client device via a first event information communication channel that is different from the first video communication channel."

761. *See* Limitations 19.5-19.11. §§X.C.3.j.v-ix, *supra*. Herzog in view of Ellis and Spivey also discloses an algorithm for periodically retrieving and transmitting to a first VCD, via the Internet and a first event information communication channel different than a video communication channel, first event information germane to a first live sporting event including first score information

for the first live sporting event. Ex.1015 ¶¶69-77, Fig. 5; Ex.1017, Figs. 12-13; Ex.1016, Figs. 30, 32.

r. Dependent Claim 28

i. Limitation 28.0: "The system of claim 27, further comprising:"

762. *See* Claim 27. §X.C.3.q, *supra*.

ii. Limitation 28.1: "means for transmitting and receiving first chat information regarding the first live sporting event video-based commentary included in the first broadcaster's live stream of digital content via at least one first chat/system event Internet communication channel that is different from the first video communication channel and the first event information communication channel."

763. *See* Claim 21. §X.C.3.l, *supra*. Herzog in view of Ellis discloses an algorithm for transmitting and receiving first chat information regarding the first live sporting event video-based commentary included in the first broadcaster's live stream of digital content via a chat/system Internet communication channel is different from the video communication channel and the first event information channel. *See* Ex.1015 ¶¶69-77, Fig. 5; Ex.1017, Figs. 12-13; Ex.1016, Figs. 30, 32.

s. Dependent Claim 29: "The system of claim 27, wherein the means for periodically retrieving includes means for updating the first score information and queueing an asynchronous message including the updated first score information for transmission on the first event information communication channel."

764. *See* Claims 25, 27. §§X.C.3.p, X.C.3.q, *supra.*

t. Dependent Claim 30

i. Limitation 30.1: "The system of claim 27, wherein the means for providing the first copy to the first viewer client device via a first video communication channel comprises:"

765. *See* Claim 27. §X.C.3.q, *supra*.

ii. Limitation 30.2: "an HTTP live streaming (HLS) mother server to receive a first HLS file suite representing the first broadcaster's live stream of digital content; and"

766. In my opinion, Herzog discloses this limitation. First, Herzog discloses an HLS file suite representing the first live stream of digital content because it streams the live event's "video/audio stream in an HTTPS Live Streaming (HLS)-based media streaming communications protocol." Ex.1015 ¶¶51, 55 ("The encoded video is then published to the content delivery network 47 (for example) via IP utilizing the HLS … techniques …."). Second, Herzog discloses a mother server because the system contemplates publishing the video streams from the Encoders, in HLS format, to the content delivery network 47 (mother server), which can be a "server" "implemented using one or more hardware platforms intended to represent a general class of data processing device … with an appropriate network connection." Ex.1015 ¶¶49-51, 83. Thus, in my opinion a POSA would have understood that Herzog's content delivery contains an HLS mother server that is revieing a first HLS file suite that represents the first live stream of digital content.

iii. **Limitation 30.3: "a plurality of HLS child servers, communicatively coupled to the HLS mother server and an HLS content delivery network (HLS CDN), to provide the first copy to the first viewer client device via the first video communication channel between the HLS CDN and the first viewer client device, wherein the first copy is based on the first HLS file suite received by the HLS mother server."**

767. In my opinion, Herzog discloses a generic server and system that streams copies of an HLS file suite to user devices over a communication channel between the CDN and user device. *See* §§X.A.2.a, X.B.3.n.ii, X.C.1.o.ii, *supra.* Moreover, Herzog discloses transferring these HLS streams to "other servers that are physically located closer to end users requesting the data in a network communications system," *i.e.*, child server. Ex.1015 ¶51. Further, Herzog discloses an entire "content delivery network" that "broadcast[s]" sporting events. Ex.1015 ¶¶43, 83. In my opinion, such a system necessarily would utilize a conventional CDN, as recognized in the '697. Ex.1006, 40:37-61. Thus, I believe a POSA would have understood Herzog discloses this limitation.

XI. SECONDARY CONSIDERATIONS OF NON-OBVIOUSNESS

768. I have seen no evidence of, and I am not aware of any evidence of secondary considerations that have a nexus to the claimed inventions that would overcome the combinations of prior art cited above in showing the obviousness of claims 1-9, 19-25, and 27-30 of the '687 patent; claims 1-9, 19-25, 27-30 of the '697

patent; and claims 1-30 of the ’218 patent. The sheer number of independently developed, simultaneous inventions, developed within in a relatively short time-period are persuasive indicia of obviousness. However, should Patent Owner assert any secondary considerations of non-obviousness, I reserve the right to respond.

XII. CONCLUSION

769. For all the reasons discussed above, it is my opinion that claims 1-9, 19-25, and 27-30 of the ’687 patent; claims 1-9, 19-25, 27-30 of the ’697 patent; and claims 1-30 of the ’218 patent are invalid.

770. I hereby declare under penalty of perjury under the laws of the United States of America that the foregoing is true and correct, and that all statements made of my own knowledge are true and that all statements made on information and belief are believed to be true. I understand that willful false statements are punishable by fine or imprisonment or both. *See* 18 U.S.C. §1001.

Date: August 22, 2024

Respectfully submitted,

Dr. Stephen B. Wicker