(12) PATENT APPLICATION **(11)** Application No. **AU 200143869 A1**
(19) AUSTRALIAN PATENT OFFICE

(54) Title
Device and methods for the stimulation of body cells through electromagentic radiation

(51)[7] International Patent Classification(s)
A61N 005/08 **A61N 005/06**
A45D 019/00

(21) Application No: **200143869** (22) Application Date: **2001.05.15**

(43) Publication Date : **2001.09.06**
(43) Publication Journal Date : **2001.09.06**

(62) Divisional of:
199889490

(71) Applicant(s)
MDE Medizintechnik GmbH

(72) Inventor(s)
Eric Larsen

(74) Agent/Attorney
MDE Medizintechnik GmbH,29 Glennsfield Street,Hill End,Queensland 4101 Australia

ABSTRACT

The invented device for hair-care and skin-care consists of an applicator (1), which is equipped with at least one print-board (6,7), upon which semiconductor-diodes (LED) or laser-diodes (8) are placed. The semiconductor-diodes (LED) and the laser-diodes radiate light with a wavelength between 350 and 2000 nm. Further, the applicator (1) contains one or more plain transmitter-coils (transducers) (3) for the emission of pulse-shaped electromagnetic radiation. It can be equipped with an IR-heating element and a ventilator to produce a warm air stream. The applicator (1) can be formed as a hood (2) or designed as a plainer surface applicator consisting of one or more parts, in the latter case the parts being connected with moveable joints. The applicator can also be designed as a hand applicator. In this case it resembles an ordinary hand-held hair drier, consisting of an almost cylindrical tube with a rectangular handle. Furthermore the hand applicator (30) can also be designed of a shaft (31) and a rotable head (32) connected with an expander (40) with a light fibre for the treatment of small areas and acupunture points.

FIG.1 a

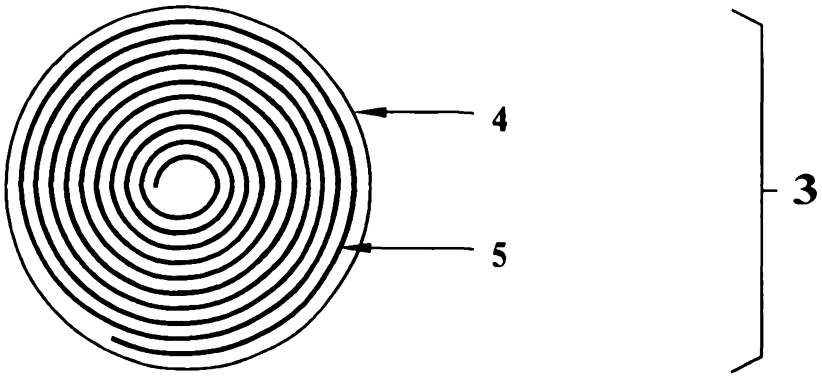

FIG.1 b

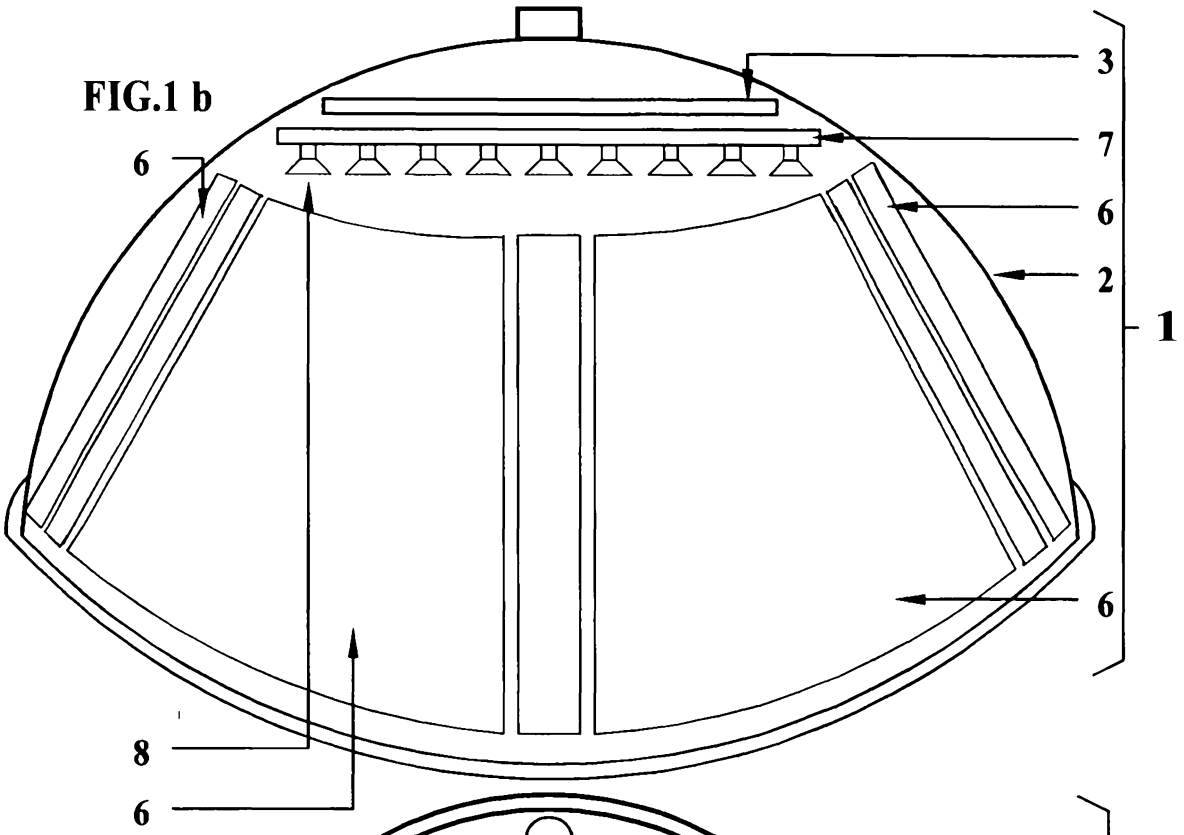

FIG.1 c

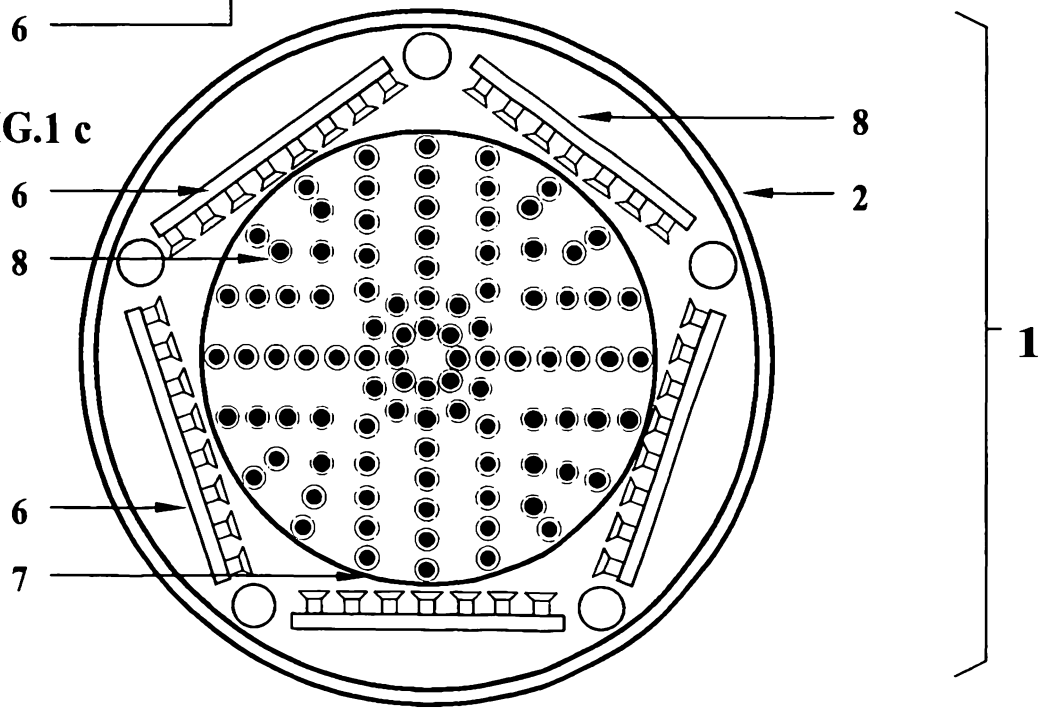

EX2004, Page 3

Device and methods for the stimulation of body cells through electromagnetic radiation

Our affluent society exposes our bodies and our hair to a great many strains. The food we eat contains too high a nitrate content, and the air we breathe is heavily polluted with nitric oxides, sodium oxides, ozone and soot particles. The heavy metals which we absorb through our food and air impair enzyme activity. We are often exposed to stressful situations, which cause a constriction of blood vessels and a decrease in blood circulation. Statistical surveys show that a rising number of persons suffer from allergies, eczema and hair problems. The reasons for this, aside from here-dietary factors, can be seen in a combination of the above-mentioned influences and the multitude of chemical treatments offered by present-day hair-dressing.

Medical research has been able to show that ailing body cells can, through irradiation with red/infrared light, be energized and regenerated.

Red/infrared light has the following effects on body cells:

Within the cells of protozoans, animals and humans can be found polymorphic organelles approximately 0.5-1 μm wide and 1-6 μm long the so called mitochondria. Depending on the kind of cell, the number of mitochondria can vary from just a couple to several hundred thousand pr. cell. The mitochondria are the source of energy for cell respiration. Through cell respiration, the nutrients which reach the mitochondria via the bloodstream are transformed, together with inhaled oxygen, into water, carbon dioxide, alcohol, lactic acid and other waste products - but most importantly into energy and building materials for the body.

Of great importance as a carrier of the produced energy is adenosine triphosphoric acid (ATP), which is synthesized in the mitochondria and orthophosphate. Of great importance during this synthesis are complicated biochemical molecules which operate as reaction catalysts

(enzymes). It has been medically proved that it is possible to stimulate the ATP production of the mitochondria through optic radiation. Such a stimulation can be effected with a continuos radiation beam, and also with a pulsed beam so long as the wavelength and frequency are correct. The radiation beam must also have a sufficient penetration depth to enable it to reach the tissue area which is to be stimulated. Light radiation within the red/infrared light range (600-2000 nm) has been discovered to be capable of stimulating the mitochondria while at the same time possessing a sufficient penetration depth. In addition to red/infrared light, blue light within the wavelength range 350-450 nm has shown the ability to enhance various intracellular activities, thereby accelerating the regeneration of fatigued or ailing tissue.

Moreover, pulsating electromagnetic fields have been shown to exert a positive influence on the bodies of both animals and humans. With the help of pulsating electromagnetic fields it is possible to send protons from electrolytic internal body fluids such as blood or lymph directly and in controlled measures into the surrounding vessels walls and membranes. This is normally not possible, since the lipids in the membranes of the blood vessels walls, which are in contact with the blood, carry a negative charge creating a surface potential which hinders the protons and ions from entering the vessel walls. The pulsating electromagnetic field enables the protons to enter the cell and vessel walls in spite of the barrier. When this occurs, the increased concentration of protons within the cell and vessel walls reverses the polarity of the barrier, thereby hindering the protons and ions from exiting through the cell and vessel walls again.

In turn, this phenomenon causes a beneficial change in the local pH value, especially within the vessel walls. Additionally, prolonged exposure to pulsating electromagnetic fields has other effects, such as the electrical constriction of the membranes and vessel walls, the adjustment of polyvalent ion chains, the tangential displacement of absorbed counter ions, the force effect on dielectric bodies in homogeneous and nonhomogeneous fields, and electro-osmosis.

In the context of hair-care, another important effect of photodynamic energy stimulation and electromagnetic fields can be mentioned. During the treatment of hair with products such as hair-colour or dye, chemical reactions take place. The energy necessary for the reaction can be provided in the form of electro magnetic radiation and in the form of light within a suitable wavelength range. This causes an acceleration of the chemical reaction. Such an acceleration can also be brought about using heat rays, but with the one important disadvantage that the entire area (Hair and scalp) is unnecessarily warmed. This is avoided when electromagnetic radiation and light are used.

Looking at the current state of technology, devices are available for the photodynamic stimulation of mitocondria by red/infrared radiation, where the red/infrared radiation is produced through semiconductor (LED) diodes and/or laser diodes. But these devices cannot be used for hair-care because they lack suitable applicators. The same can be said for existing devices for treatment with pulsating electromagnetic fields. Moreover, a combined treatment with both red/infrared light and pulsating electromagnetic fields is not possible with these devices.

A device able to deliver red/infrared radiation, light within the blue range, electromagnetic radiation and hot air is not at present available. Hence, the invention is aimed at creating a device for hair-care which is capable of photodynamic energy stimulation with both red/infrared and blue light, treatment with pulsating electromagnetic fields and hot air. See patent claim 1. The device consists of a suitably designed applicator with at least one print-board on which semiconductor (LED) diodes or laser diodes are arranged. The applicator also includes one or more transducers for the emission of pulse-shaped electromagnetic radiation, and a bellows heating element for the generation of a hot air current. The applicator is hood-shaped and has an appearance resembling that of an ordinary hair-drier hood. The applicator can also be

constructed as a plain surface-applicator consisting of more elements adjustable to each other over hinges, connected to a moveable stand by a flexibel joint-arm.

While the applicators (25) according to fig. 3d are constructed for the treatment of larger tissue areas, the hand applicator 30 according to fig. 3e are developed for the treatment of small tissue areas.

The applicator shoved in fig. 2 can also be made in a hand-held version, and in this case resembles an ordinary hand-held hair-drier, consisting of an almost cylindrical tube with a rectangular handle protruding at the rear. The invention is, amongst other things, illustrated in the diagrams.

With the aid of the diagrams of working models the invention will be explained, the following figures show:

Fig. 1a Plain transmitter coil (transducer) viewed from above, with spiral transmitter-winding.

Fig. 1b Applicator hood, side-view.

Fig. 1c Applicator hood, viewed from below.

Fig. 2a Hand applicator, side-view.

Fig. 2b Print-board with semiconductor-(LED) diodes or laser diodes and openings for hot air, viewed from above.

Fig.3a-d A stand with integrated control unit and a plain surface applicator connected with a flexible arm to the stand.

Fig. 3e A hand applicator with a rotable headpiece.

Fig. 3f Details of a circuit board for the applicator showed in fig. 3f.

Applicator 1 is hood-shaped with a circular cross-section (fig. 1). It can be positioned over the head of the person to be treated in the same way as a drier-hood. For this purpose the applicator is mounted on a stand or a jointed arm. Inside the bowl 2 of the hood, a plain transmitter-coil (transducer) 3 is located at its vertex. The transmitter-coil 3 consists of a circular base-plate 4 on which a transmitter winding of circular spiral shape is placed on one or both sides. The transmitter winding of the transmitter coil can be shaped as a quadripole. The transmitter coil 3 is placed perpendicular to the bowl longitudinal axis. The generator for producing the necessary current pulses is located in a power unit, which also contains the current supply and a control mechanism (not illustrated). Supplementary to the transmitter coil 3, several trapezoidal print-boards 6 and a circular print-board 7 are placed in the hood's interior 2. The circular print-board 7 is placed in the upper area of the bowl 2. It is located closely below the transmitter coil 3 and almost parallel with this. The trapezoidal print-boards are placed laterally within the bowl 2, spread at regular intervals around its circumference, and narrowing to the top. Fig.1 illustrates a version of the hood-applicator 1 with five pieces trapezoidal print-boards 6. The lower edges of the print-boards form a regular pentagon. These

print-boards 6, 7, carry semiconductor (LED) diodes 8 or laser-diodes 8 for the generation of red/infrared light and light within the blue range.

They are supplied with current pulse frequencies of 200 - 20000 Hz and current pulse lengths of between 2 and 200 microseconds (preferably 2-20 microseconds) and current pulse amplitudes between 15 and 25 Volts. Operating in this manner, utilizing a short current pulse length, thermal build-up is avoided and it is therefore possible to work with a constant effect. Then the apparatus is operating in this mode there appears simultaneously at each IR semiconductor (LED) diode 8 light radiation within three separate wavelength ranges, in the ranges 600, 900 and 1200 nm. Through a synchronous stimulation of the red light (LED) diodes 8 and the blue light (LED) diodes 8 - four radiation wavelengths become available for therapeutic use, 400 nm (blue light) and 600 (red light), 900 and 1200 nm (infrared light). Furthermore the light range can be extended by using semiconductor diodes (LED) which emits a white light containing all colours in the visible spectrum and also advantageable is the use of diodes with adjustable wavelength. Diodes whose wavelength can be adjusted by means of a piezo-element are customary. In addition to the above semiconductor (LED) operating mode, another mode is available - the laser mode. In this mode the print-boards are equipped with laser diodes instead of semiconductor (LED) diodes. The laser diodes are supplied with current impulses of a frequency between 200 and 20 000 Hz, a current pulse length between 2 and 200 nanoseconds, and a current pulse - amplitude between 40 and 400 Volts. A monochromatic laser light with a preferable wavelength of about 900 nm is generated and can be used for therapeutic purposes just as well as light of a comparable wave length generated by semiconductor (LED) diodes, under the precondition that the current pulse length for photodynamic stimulation in the - laser mode falls within 2 - 200 nanoseconds. Adjustment to a

short pulse-length within the range of 2 to 20 nanoseconds combined with a high amplitude-potential, results in an advantageable double photon radiation from the laser diode.

The current impulses necessary for the generation of the light are also produced by a generator located in a control unit, which can be built in as a part of the hood applicator (not illustrated) or can be constructed as a part of the moveable stand if the applicator is the plain version. The heating element supplies the hood with hot air for hair-drying via a pipe. The hot air is blown through jets into the inside of the bowl 2, (not illustrated).

The applicator 25, according to Fig. 3d are equipped with sensors 29 arranged between diodes (8), the semiconductor- or the laser diode. For therapeutic causes it is, for example intended to insert a given amount of energy (Joule / per cm2) per irradiated surface of tissue, which can be adjusted at the control unit 22. Sensor 29 measure the amount of energy, which penetrates into the tissue. Individual from patient to patient this amount of energy has to be increased by the irradiated amount of energy, so that the correct amount of therapeutic energy (Joule/cm2) reaches the tissue.

An increase of the registred amount of energy can be achieved by increasing the operating-potential (pulse-amplitude) or the pulse-frequency and/or a prolonging of the duration of the treatment time through an adjustment of the controller unit. The sensors are also used for the selection of the correct radiation wavelength for each individual patients.

The condition of the body is changed by the pulsed electromagnetic fields, whereby the patient`s therapy tonus changes due to improvement from treatment to treatment and it is very important that the adjustment of the intensity can be optimized with the aid of biofeedback regulated by an infrared detector system. The transmitter and receiver parts of the detector system, electrical connected to the biofeedback regulation in the device, can be mounted in the center of the transmitter coil. The pulsed electromagnetic fields can be optimized by regulating the pulse amplitude and/or the ON-OFF phases.

The hand-applicator 30 developed for the treatment of acupuncture points and smaller areas includes a shaft 31 to which a headpice 32 is connected. The hand-applicator 30 shows at the front end of the shaft 31 a circuit board 33, where one or more infrared semiconductor diodes (LED) (infrared light) 36 and one or more semiconductor diodes (LED) (blue light) 37 are placed, where the diode 36 is stimulated to the emitting of light with the discribed 3 wavelengths and the diode 37 is stimulated to emit the descibed wavelength range of 350-500 nm. In front of the circuit board 33 a head-piece 32 is placed, connected with a fastened hollow expander 40, in which an optical fibre is sealed. The head-piece 32 is mounted with a click lock function in front of the circuit board 33 so it can be rotated 180 °, so that the radiation outlet to the expander 40 can be positioned in front of either the diodes 36 or 37. If the expander 40 is positioned for example in front of the diode 36, light within the wavelengths 600, 900, 1200 is transmitted through the optical fibre in the expander 40 and finally hits the treatment area. Through a positioning of the expander in front of the blue light semiconductor diode (LED) 37, blue light is conducted through the expander 40 to the selected treatment area.

According to the need the head-piece can also be equiped with a focus lens and a polarisation filter. The expander is mounted to the headpiece with a click-lock and can be removed and sterilized by autoclave. Furthermore the hand applicator is also equipped with a sensor system as described for the surface applicators.

Another possible version of the applicator is the hand model 9. At the rear of the almost cylindrical tube is a rectangular handle, the rear edge of which forms a straight line with the rear of the tube 10. At the front of the tube is a circular print-board which is divided into four ring-shaped areas 15, 16, 17, 18, and a circular central area 19. The outermost ring 15 is equipped with semiconductor (LED) and/or laser diodes 8. The second outermost ring 16 is divided into four quadrants, two of which are equipped with semiconductor- (LED) and/or laser diodes 8, the other two with air vents for the hot air 20. The quadrants containing diodes and the quadrants containing air-vents are placed alternately. The second innermost ring 17 is equipped

and arranged in the same way as the second outermost ring 16, while the innermost ring 18 is identical to the outermost ring 15. The circular central area 19 is a grid which allows the passage of hot air. The generator for producing the current pulses with which the semiconductor (LED) and/or laser diodes 8 are supplied is located in the tube 10. The tube 10 also contains the ventilator and heating coils for generating the hot air current which is emitted through the front of the tube via the air vents 20 and the grid area 19 on print-board 14. Also located in the tube 10 of the hand applicator 9 is a control unit. The hand applicator 9, like the hood applicator, has two operating modes semiconductor (LED) and laser. The two applicators 1 and 9 can also be designed as a plainer surface applicator with both semiconductor (LED) and/or laser diodes and one or more transmitter coils (transducers). The surface applicator can consist of one or more parts - in the latter case the separate parts being in moveable jointed sections. The suggested applicators 1 and 9 enable for the first time the use of photodynamic stimulation and electromagnetic field treatment in hair-care. The red/infrared photons which penetrate the tissues are absorbed by a light-sensitive enzyme (biocatalyst), within the mitochondria of body cells. In this way the generation of the energy carrier molecule ATP is increased, thus stimulating the vital processes of the scalp.

The hair and the scalp are regenerated. The weak inductive electromagnetic waves activate the circulation by means of microvibration, causing a vasodilatation and restoring the functional ability of contracted or occluded blood vessels. The blood supply of the hair follicles and scalp is improved, and thereby the oxygenation of the cells of the hair scalp. The hair growth period is optimized, and balanced with the ensuing rest period. The radiation of the semiconductor-(LED) diodes accelerates chemical processes, resulting in an improved binding of the colour molecules during hair dying or tinting. The hair can now be more easily styled. Combined with the use of a vitamin cure, a conditioner or other hair-care products, the treatment enables better

absorption by the hair and the scalp, thereby optimizing the quality and duration of their effects. The suggested applicators 1 and 9 enable a noiseless treatment without unpleasant heat. They shorten the working time of chemical hair treatments. Treatment of hair with electromagnetic fields and photodynamic energy stimulation gives the hair more shine and has a general balancing effect on hair loss, dandruff, seborrhea, alopaecia areata and other trichosis. The plain applicator, which can be formed after the body is also very suitable for treatrment of all dermatological diseases and even pain.

It is well known that excessive heat for the drying of wet hair has a desiccative and noxious effect on the hair. The applicators 1 and 9 enable the drying of wet hair through radiation by semiconductor- (LED) diodes within the wavelength 600 - 2000 nm. A ventilator sends an air flow past the semiconductor- (LED) diodes towards the treatment area. The air flow is warmed to body temperature (37° Celsius) by a heating element.

The accelerating effect of the semiconductor- (LED) diode radiation on chemical processes can be used not only for hair-care, but also for other purposes, for example the hardening of agglutinate plastics or other filling materials.

PATENT CLAIMS:

1. A device and methods for the stimulation of body cells and for the acceleration of chemical processes and the drying of wet hair using pulsed or continous light in combination with at least one electromagnetic radiation source, comprising:

- a suitable number of diodes (8) with,
- a suitable strength and,
- a suitable wavelength,
- a transmitter-coil (3) with,
- a suitable number of transmitter-windings for,
- transmitting a suitable strength of electromagnetic radiation,
- a heating spiral transmitting IR heat radiation with,
- a suitable strength,
- a suitable wavelength,
- a control and power unit,
- a fan producing an air flow,
- a feedback system for the electromagnetic radiation,
- a feedback system for the light emission,

characterized by the following:

- the components are housed in a hood-shaped applicator (2),
- the components are housed in a flat applicator (25) consisting of more elements connected with hinges, adjust- and form-able after the local body form,
- the components are housed in a handapplicator (30) consisting of a handle with rotable head (32) equipped with an expander (40),
- the components are housed in a hand applicator consisting of a tube (10) with a handle (11).

2. Device according to claim 1, comprising following radiation sources:

a) a number of semiconductor-diodes (LED)(8) and laser-diodes (8) with a wavelength range of 350-2000 nm as well as;

b) at least one IR-radiation source with a wavelength of 1μm - 1 mm

3. Device according to claim 1, comprising following radiation sources:

a) a number of semiconductor-diodes (LED)(8) and laser-diodes (8) with a wavelength range of 350 - 2000 nm as well as;

b) at least one transmitter-coil (3) for the emission of electromagnetic radiation within the wavelength range of 300 Mm – 0.3 cm (1 Hz - 100 GHz).

4. Device according to claim 1, comprising following radiation sources:

a) at least one transmitter-coil (3) for the emission of electromagnetic radiation within the wavelength range of 300 Mm – 0.3 cm as well as;

b) at least one IR-Radiation source with a wavelength range of 1μm - 1 mm.

5. Device according to claim 1, comprising following radiation sources:

a) a number of semiconductor-diodes (LED)(8) and/or laser-diodes (8) with a wavelength range of 350-2000 nm;

b) at least one transmitter-coil (3) for the emission of electromagnetic radiation within the wavelength range of 300 Mm – 0.3 cm;

b) at least one IR - radiation source with a wavelength of 1 μm - 1 mm.

6. Device according to one of claims 2, 3 and 5, comprising:

a) - semiconductor diodes (LED) (8) emitting a blue-light radiation within a wavelength range of 350 to 500 nm,

c) - semiconductor diodes (LED) (8) emitting a red light radiation within a wavelength range of 590 to 700 nm,

d) - IR semiconductor diodes (LED) (8) emitting 3 seperate wavelengths area such as 600 nm, 900 nm and 1200 nm,

e) - semiconductor diodes (LED) (8) emitting a white light radiation containing all visible colours,

f) - diodes (8) with adjustable wavelength emitting a light radiation within a wavelength range of 350 – 2000 nm.

7. Device according to claim 6, comprising semiconductor-diodes (LED) (8) operating with a pulse frequency between 1 and 20 KHz, a pulse length between 2 and 200 μs and a pulse amplitude between 15 and 25 V.

8. Device according to claim 7, optimally operated with a pulse duration between 2 and 20 μs.

9. Device according to one of the claims 1, 3 and 5-8, comprising laser-diodes (8), some of which have an emission wavelength between 350 and 2000 nm.

10. Device according to claim 9, comprising laser-diodes (8) operating with a pulse frequency between 0.2 and 20 KHz, a pulse length between 2 and 200 ns and an pulse amplitude between 40 and 400 V.

11. Device according to claim 10, optimally in order to stimulate a double photon release, the laser diodes are supplied by high voltage pulses with a pulse-length of 2 to 20 nanoseconds.

12. Device according to one of the claims 3-11, comprising a circular base-plate (4) which is equipped on one or both sides with a spiral-shaped transmitter-winding (5).

13. Device according to claim 12, wherein the:
The control and power unit activates the coil (3) with base pulses having:
a frequency between 2 and 500 Hz;
ON times of about three-tenths of a period;
OFF times of about seven-tenths of a period;
and non-instantaneous rise and fall times.

14. Device according to claim 13, wherein:
the control and power unit superimposes pulse-bundles on the base pulses;
wherein the pulse-bundles comprise pulses having a frequency of about 10 kHz.

15. Device according to claim 1, wherein the electromagnetic intensity of the device can be regulated and optimized by biofeedback.

16. Device according to claim 15, wherein the biofeedback system of the device is connected with an infrared detector system, consisting of a transmitting and receiving part, mounted in the center of the transmitter coil.

17. Device according to one of the claims 2, 4-13, comprising an IR - radiation source with a resistor-wire heating spiral and/or semiconductor-diodes within a wavelength range of 600 to 2000 nm.

18. Device according to one of the claims 2, 4-13 , comprising a fan creating an air flow to transport the warmed air generated by the IR-radiation source and the light photons to the area to be treated.

19. Device according to one of the previous claims, wherein the components are housed in:

a) - a hood-shaped applicator (2),

b) - a flat applicator (25) consisting of a number of induvidual hinged (27) flat elements (26) which can be adjusted in angles to each other.

20. Device according to claim 16 a:

-at the vertex of the hood applicators interior (2) a plain transmitter-coil (3) is placed perpendicular to the hood applicators longitudinal axis,

-at the upper area of the <u>hood</u> [bowl] (2) beneath the transmitter-coil (3) at least one circular print-board (7) as well as

-at the lateral area along the outside of the hood (2) at least one trapezoidal print-board (6) are placed,

-whereby the circuit boards (6,7) are equipped with semiconductor-diodes (LED) and/or laser diodes (8) in alternate order, and

-whereby the hood (2) is supplied with hot air from a resistor-wire heating spiral.

21. A device according to claim 16 b, wherein the applicator (25) is mounted on a stand (21) by means of a moveable joint-arm (24).

22. A device according to claim 1-11, wherein at least one handapplicator (30) is equipped with a shaft (31) and a head (32), and that a circuit board (33) is placed in the head and equipped with semiconductor diodes (LED) and/or laser diodes.

23. A device according to claim 19, wherein an axial radiation outlet (34) in the head (32) is equipped with a mounted lens (35).

24. A device according to claim 19-20, wherein the diodes (36, 37) are placed behind a polarisation filter (38).

25. A device according to claim 19-21, wherein an expander (40) is designed for the head (32), and the head (32) can thus be rotated in front of the circuit board (33), so that for example either infrared light or blue light can be conducted via the expander to the treatment area.

26. A device according to claim 22, wherein the expander (40) contains an optic fibre cable.

27. A device according to claim 1- 19, wherein the sensors (29) for the measurement of retro-reflected light radiation are mounted in the applicators (25, 30) for the automatic selection of the correct light intensity and wavelength.

28. Device according to one of the claims 1-15, wherein the components are housed in a hand applicator consisting of a tube (10) and a handle (11).

29. Device according to claim 18:
-at the front (13) of the almost cylindrical tube a circular (14) circuit board is placed, which is divided into four ring-shaped areas (15-18) and a circular central grid (19), the

outermost and innermost ring-shaped areas (15, 18) are equipped with semiconductor-diodes (LED) and laser-diodes (8); the second innermost and the second outermost areas (16, 17) are divided into four quadrants, whereby two quadrants are equipped with semiconductor-diodes (LED) and laser-diodes (8),
while the other two quadrants are equipped with air vents (20) for the hot air, and the quadrants with the diodes (8) and the quadrants with the air vents (20) are placed alternately; further, within the tube (10) and/or the handle (11) a pulse generator, a ventilator, a heating coil for the generation of hot air and a control unit are placed.

30. The device according to one of the claims 1-19, wherein the device is used for the treatment of the hair and the skin of humans.

FIG.1 a

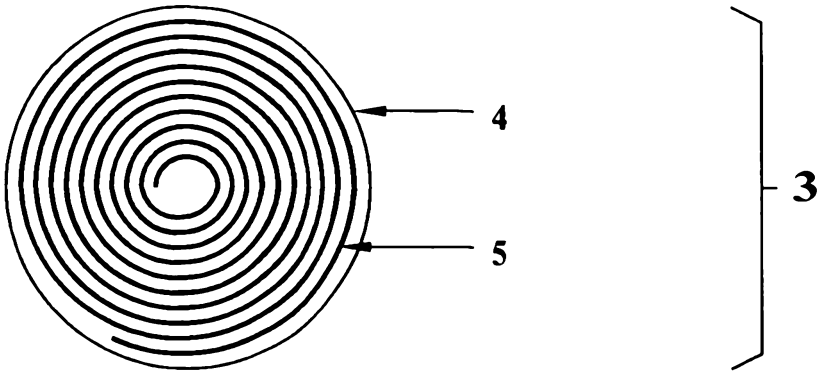

FIG.1 b

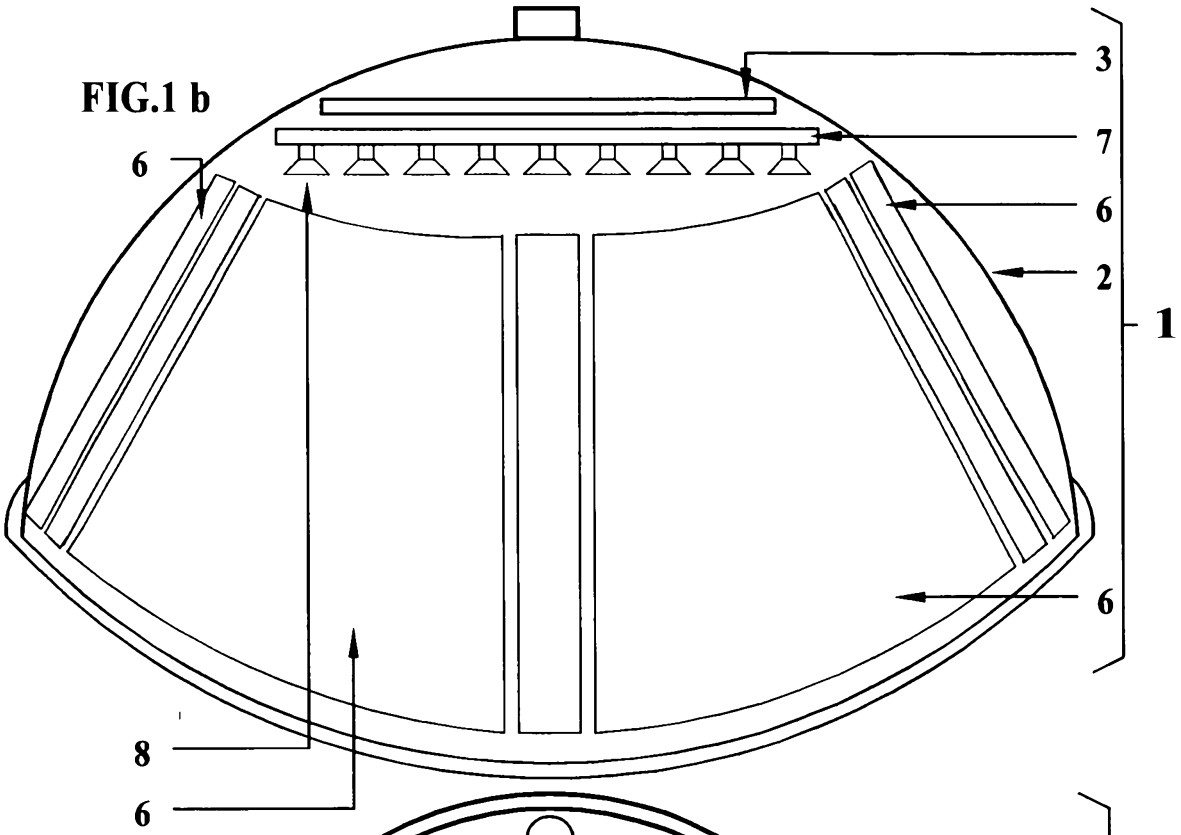

FIG.1 c

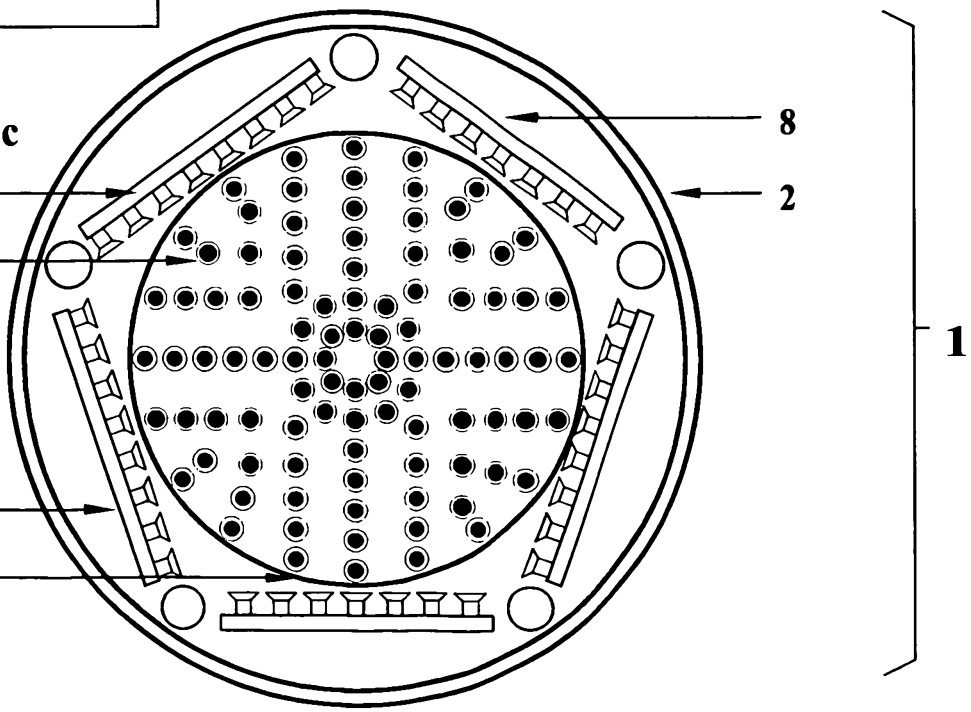

EX2004, Page 20

EX2004, Page 21

FIG.2 a

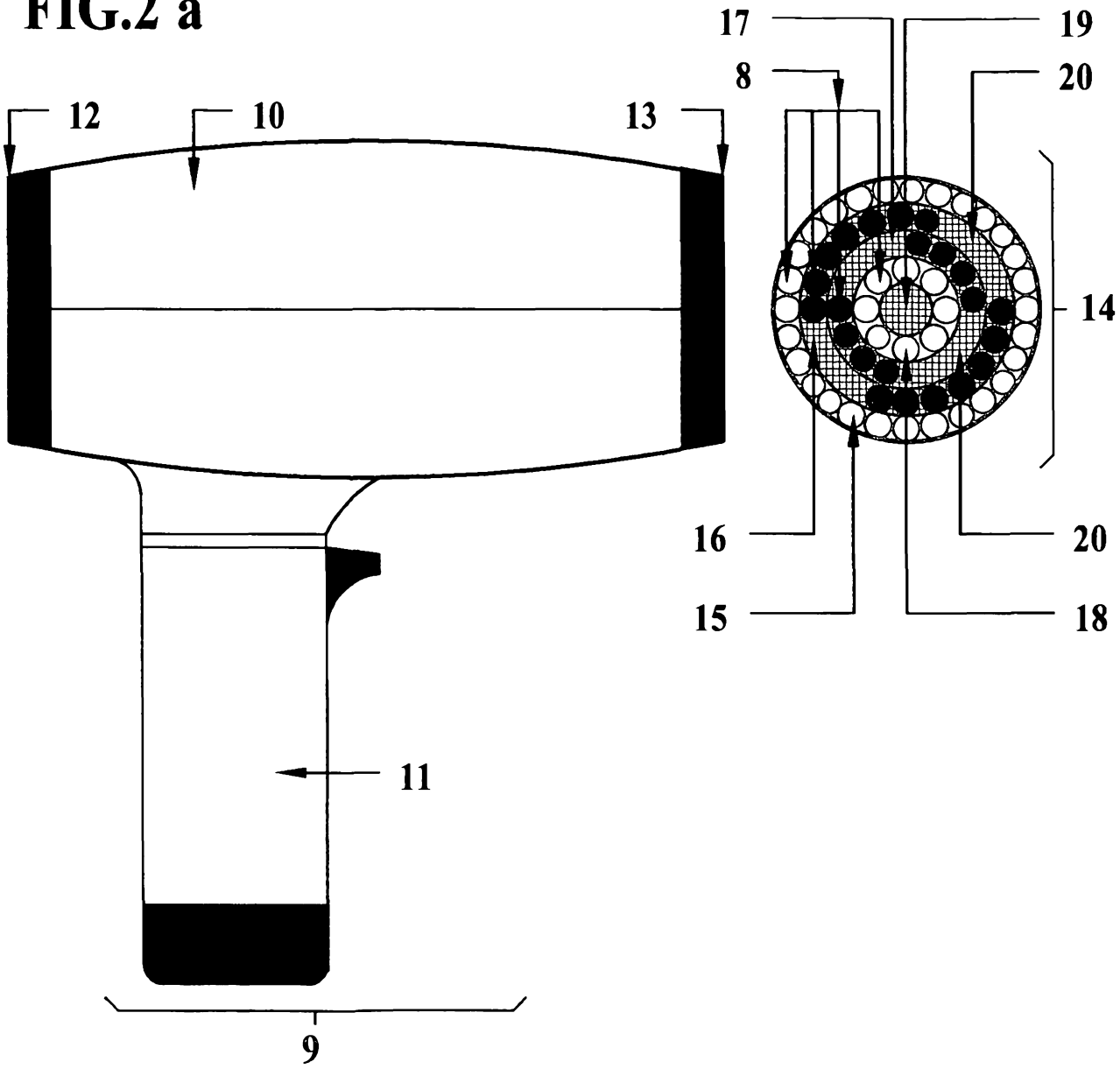

Fig. 3d

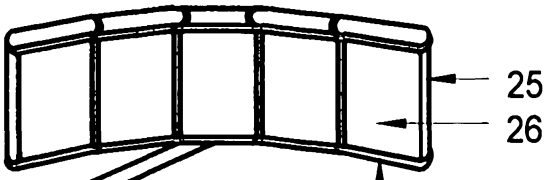

Fig. 3c

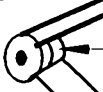

Fig. 3b

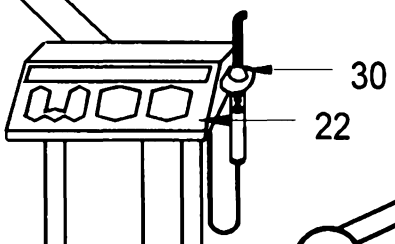

Fig. 3a

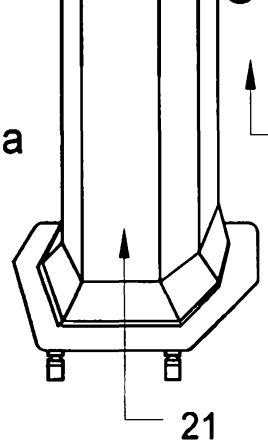

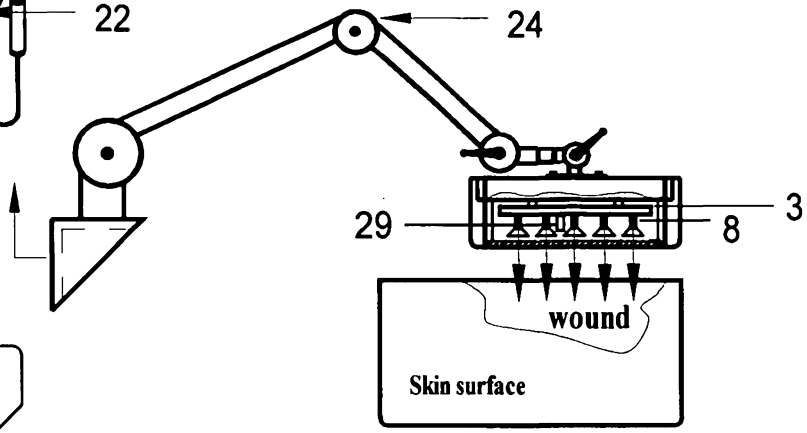

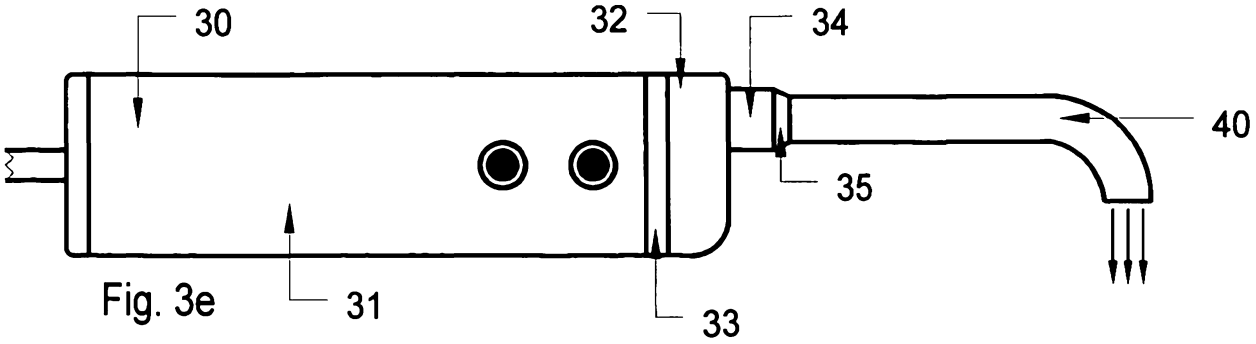

Fig. 3e
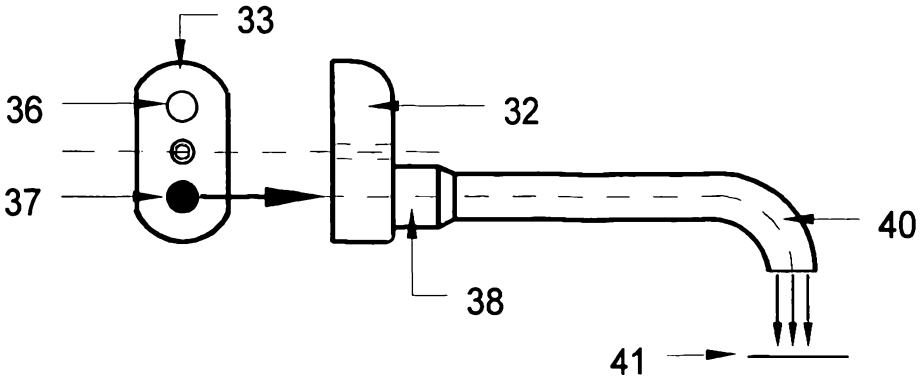
Fig. 3f