US006246179B1

(12) **United States Patent**
Yamada

(10) **Patent No.: US 6,246,179 B1**
(45) **Date of Patent: Jun. 12, 2001**

(54) **EMISSIVE ELEMENT AND DISPLAY DEVICE USING SUCH ELEMENT**

(75) Inventor: **Tsutomu Yamada**, Gifu (JP)

(73) Assignee: **Sanyo Electric Co., Ltd.** (JP)

(*) Notice: Subject to any disclaimer, the term of this patent is extended or adjusted under 35 U.S.C. 154(b) by 0 days.

(21) Appl. No.: **09/451,457**

(22) Filed: **Nov. 30, 1999**

(30) **Foreign Application Priority Data**

Dec. 1, 1998	(JP)	10-341857
Dec. 2, 1998	(JP)	10-341858
Oct. 4, 1999	(JP)	11-283182
Oct. 28, 1999	(JP)	11-307126

(51) **Int. Cl.**[7] **G09G 3/10**

(52) **U.S. Cl.** **315/169.3**; 315/169.1; 345/76; 345/92; 313/498; 313/506

(58) **Field of Search** 315/169.3, 169.1; 313/500, 503, 504, 498, 506; 345/76, 92

(56) **References Cited**

U.S. PATENT DOCUMENTS

4,015,166	*	3/1977	Ohshima et al.	313/503
5,550,066		8/1996	Tang et al.	437/40
5,684,365		11/1997	Tang et al.	315/169.3
5,742,129	*	4/1998	Nagayama et al.	315/167
6,072,450	*	6/2000	Yamada et al.	345/76
6,091,382	*	7/2000	Shioya et al.	345/76

FOREIGN PATENT DOCUMENTS

8234683	6/1996	(JP) .
8241047	6/1996	(JP) .
8241048	6/1996	(JP) .

* cited by examiner

Primary Examiner—Haissa Philogene
(74) *Attorney, Agent, or Firm*—Cantor Colburn LLP

(57) **ABSTRACT**

An EL element (**60**) comprises an anode (**61**), a cathode (**67**), and an emissive element layer (**66**) interposed between the two electrodes. A TFT is connected to the anode (**61**) at its source electrode (**33***s*). The peripheral portion of the anode (**61**) and the entire region over the TFT are covered with a planarizing insulating film (**17**), and a part of the exposed portion of the anode (**61**) is connected to the emissive element layer (**66**). According to the above arrangement, it is possible to prevent disconnection of the emissive element layer (**66**) which may be caused by an uneven surface created by the thickness of the anode (**61**), and to avoid formation of a short circuit between the anode (**61**) and the cathode (**67**).

49 Claims, 6 Drawing Sheets

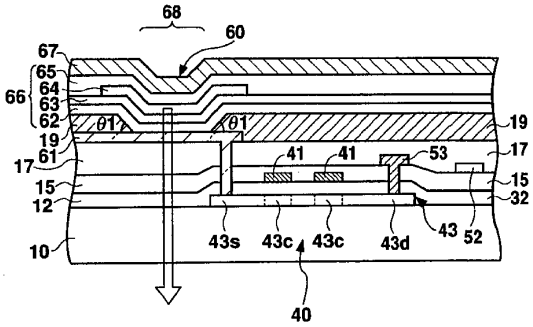

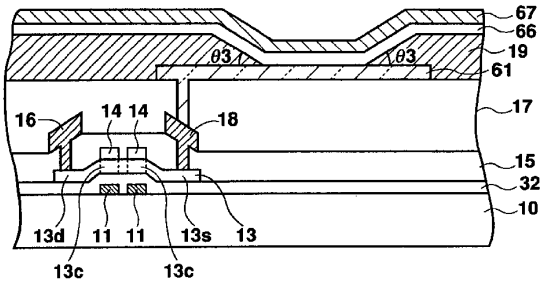

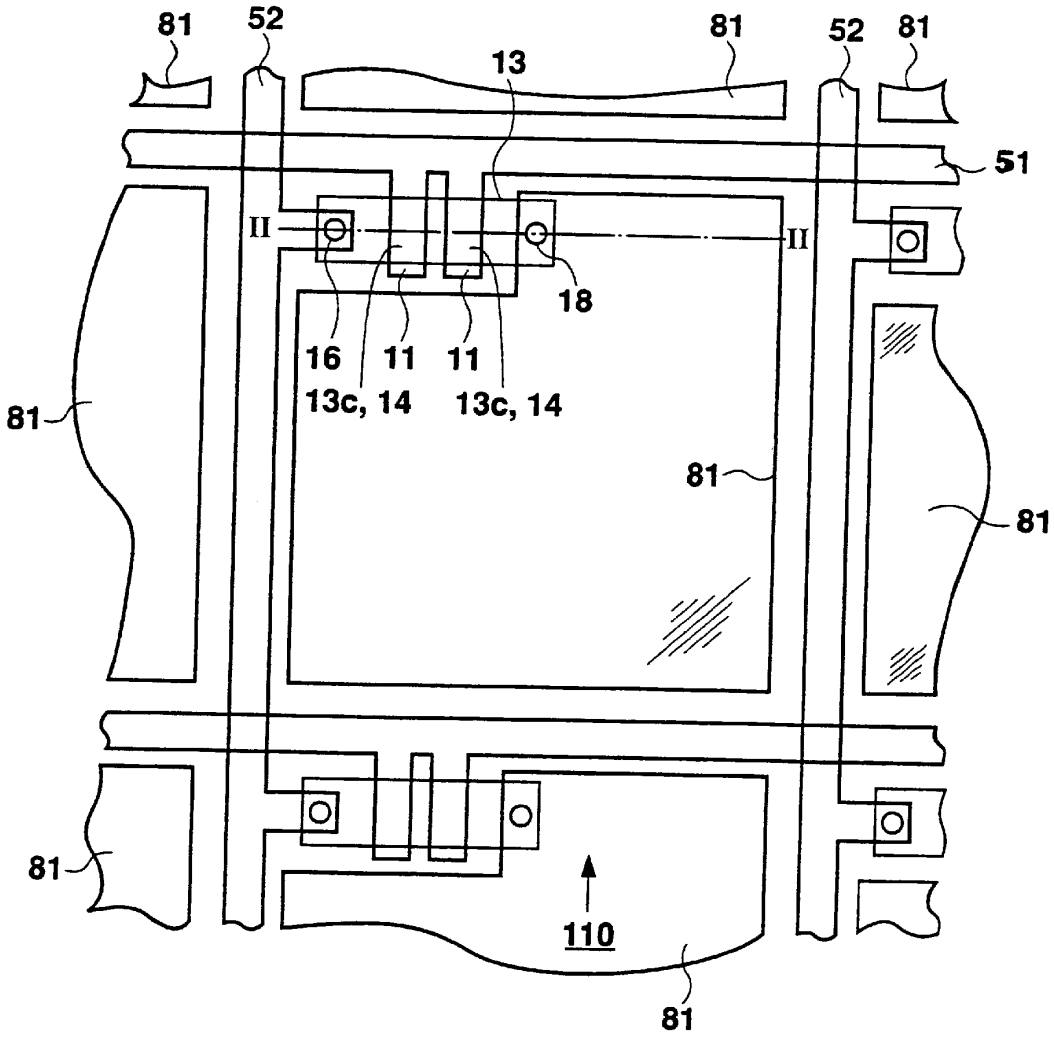

Fig. 1 RELATED ART

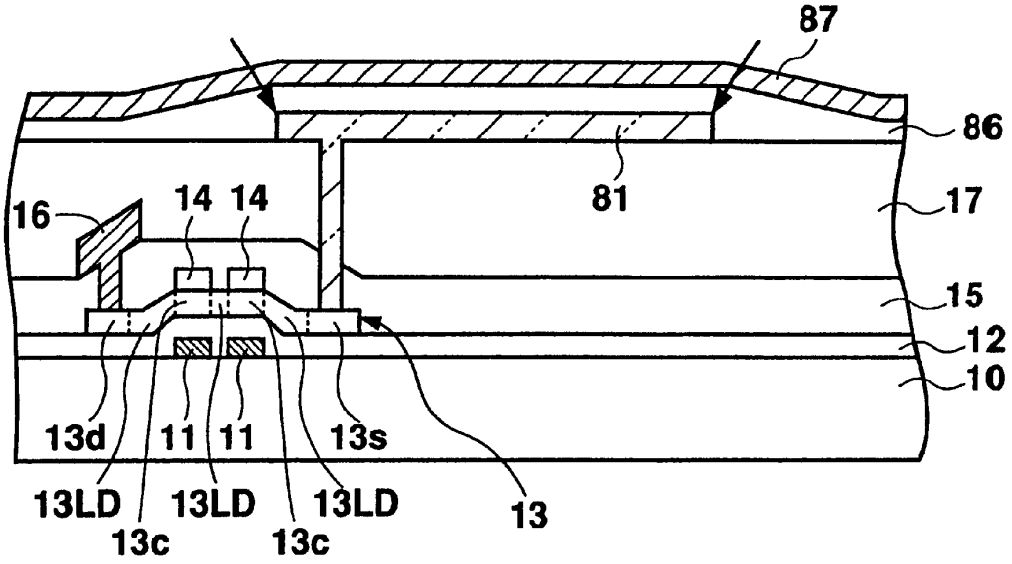

Fig. 2 RELATED ART

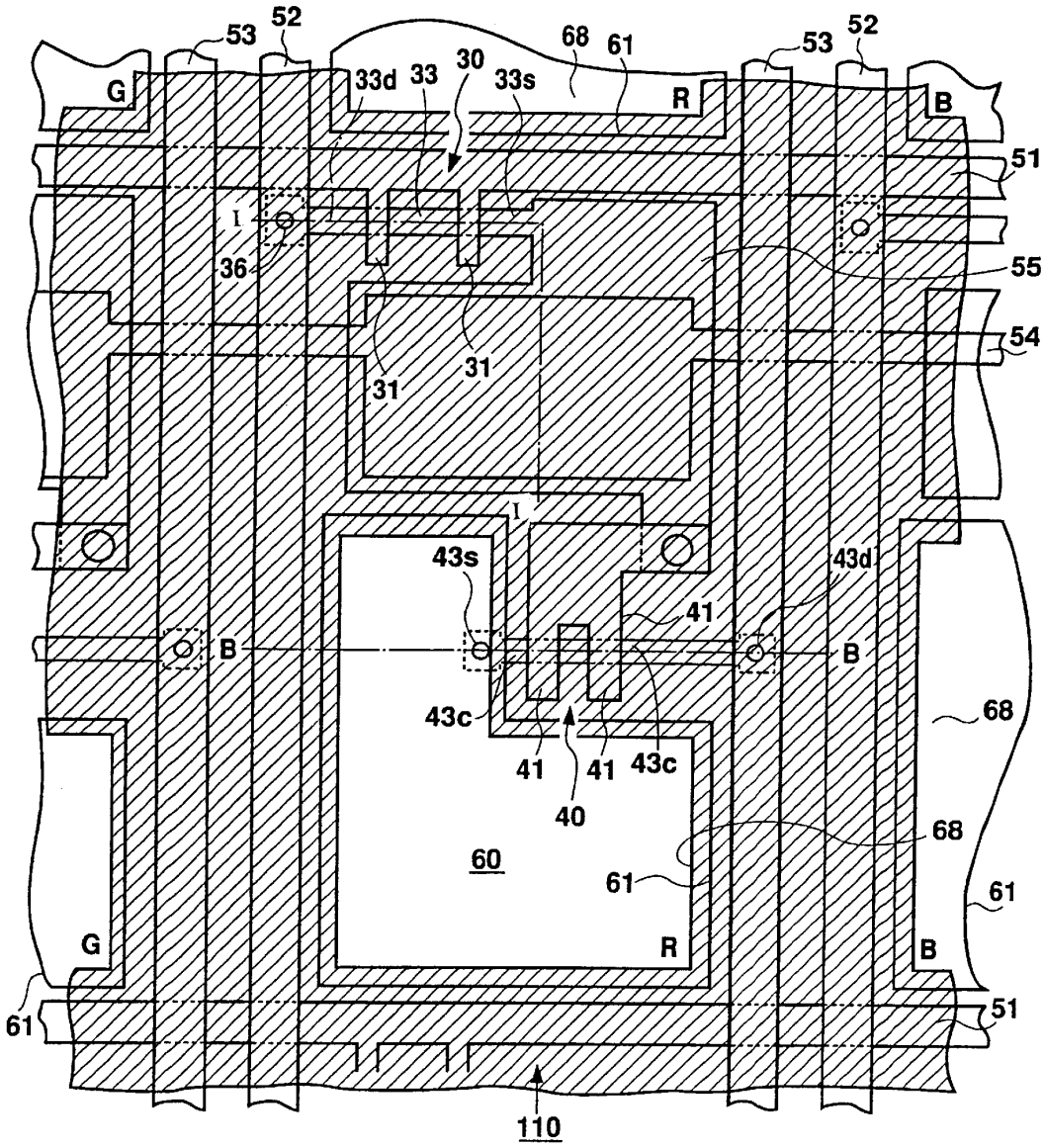
53
52
68
61
53
52
G
33d
33
30
33s
R
B
51
I
36
55
54
31
31
I
43s
43d
41
B
B
43c
68
41
41
43c
40
68
60
61
61
G
R
B
61
51
110

Fig. 3

Fig. 4A

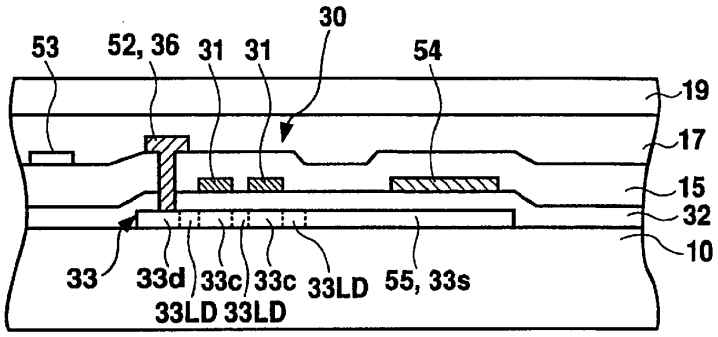

Fig. 4B

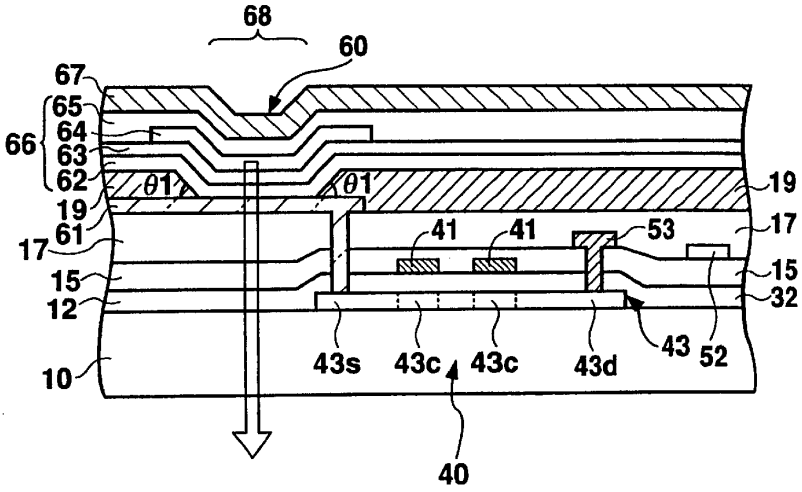

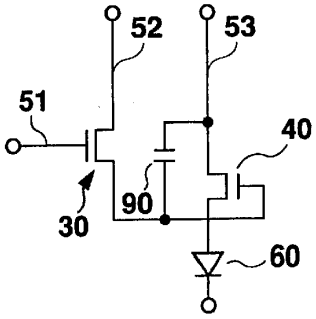

Fig. 5

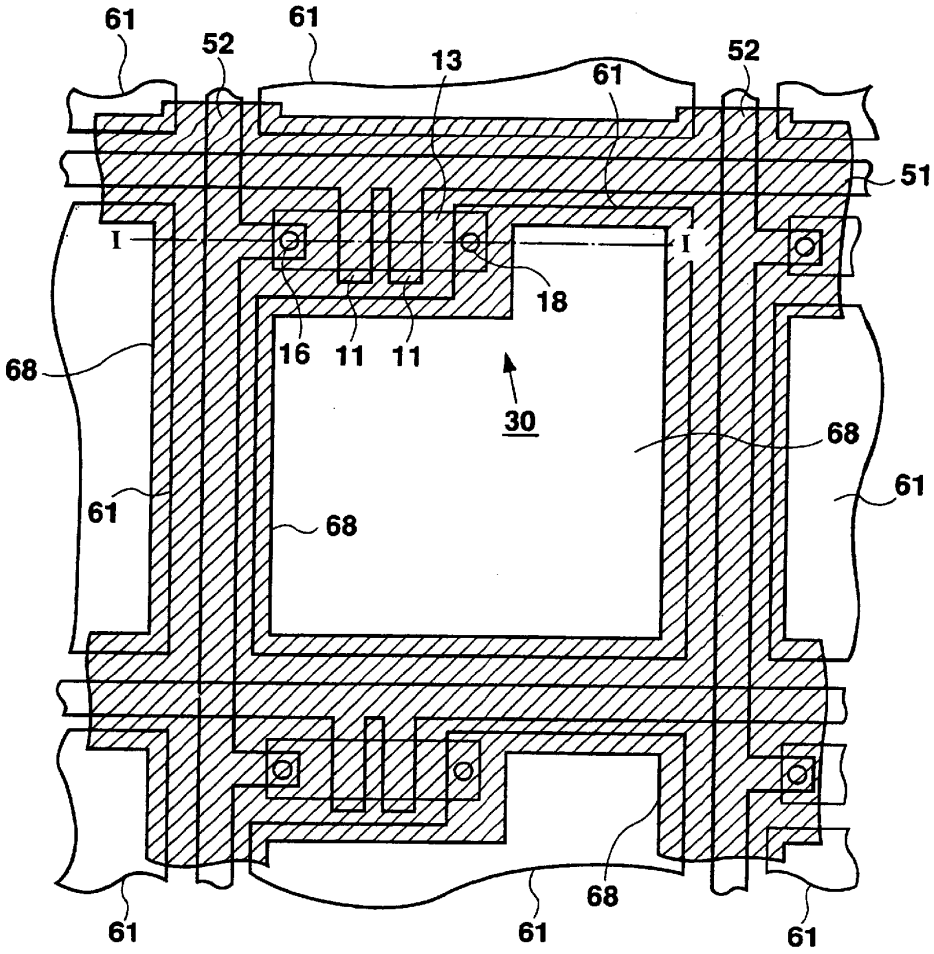
61
52
61
13
61
52
51
I
I
18
16
11
11
68
30
68
61
61
68
68
61
61
61

Fig. 6

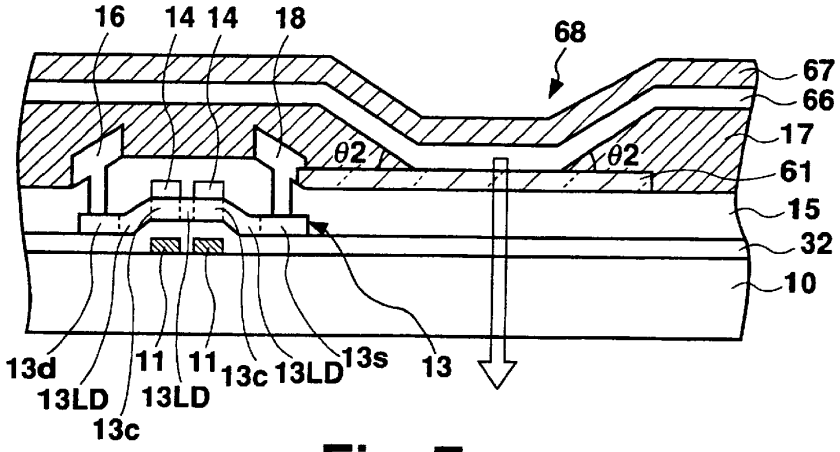
16
14
14
18
68
67
66
17
θ2
θ2
61
15
32
10
13d
13LD
13c
11
13LD
11
13c
13LD
13s
13

Fig. 7

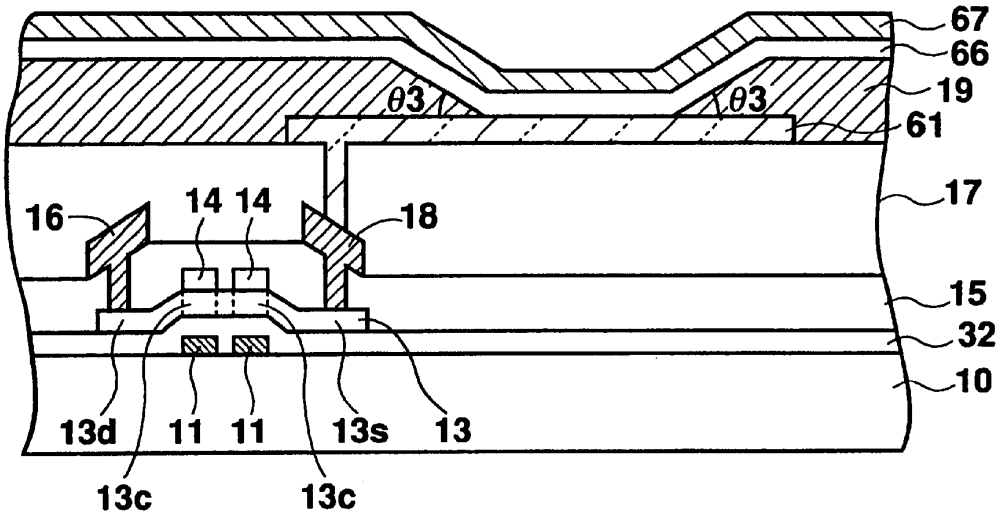

Fig. 8

EMISSIVE ELEMENT AND DISPLAY DEVICE USING SUCH ELEMENT

BACKGROUND OF THE INVENTION

1. Field of the Invention

The present invention relates to a display device using a self-luminous element, and particularly to a display device using an electroluminescence element and a thin-film transistor.

2. Description of the Related Art

In recent years, electroluminescence (referred to hereinafter as "EL") display devices comprising EL elements are regarded as devices that may replace CRT and LCD. Research has been conducted for the development of EL display devices using, for example, thin film transistors (referred to hereinafter as "TFT") as switching elements to drive the EL elements.

FIG. **1** shows a plan view of a possible configuration of an active type EL display device, and FIG. **2** shows a cross-sectional view taken along line II—II of FIG. **1**.

As shown in FIG. **1**, a TFT is disposed near a junction of a gate signal line **51** with gate electrodes **11** and a drain signal line **52**. The drain of the TFT is connected to the drain signal line **52**, and the gate of the TFT is connected to the gate signal line **51**. Further, the source of the TFT is connected to the anode **81** of an EL element.

As shown in FIG. **2**, a display pixel **110** is formed by sequentially laminating a TFT and an organic EL element on a substrate **10** which may be a substrate made of glass or synthetic resin, a conductive substrate, or a semiconductor substrate. When a conductive substrate or a semiconductor substrate is used as the substrate **10**, an insulating film made of materials such as SiO_2 or SiN is deposited before the TFT is formed.

Gate electrodes **11** made of refractory metal such as chromium (Cr) are first formed on the insulator substrate **10**. Subsequently, a gate insulating film **12** and an active layer **13** composed of p-Si film are sequentially formed.

In the active layer **13**, channels **13***c* are formed in a position above the gate electrodes **11**. Ion doping is performed using stopper insulating film **14** formed on the channels **13***c* as masks. Regions on both sides of the gate electrodes **11** are then covered with a resist, and further ion doping is conducted. As a result, low-concentration regions **13**LD are disposed on both sides of the channels **13***c*. Furthermore, a source **13***s* and a drain **13***d*, which are high-concentration regions, are formed on the outer sides of the low-concentration regions **13**LD, respectively. The described structure is the so-called LDD (Lightly Doped Drain) structure.

Subsequently, an interlayer insulating film **15** comprising a sequential lamination of a Sio_2 film, a SiN film, and a SiO_2 film is formed to cover the entire region over the gate insulating film **12**, the active layer **13**, and the stopper insulating film **14**. A contact hole formed with respect to the drain **13***d* is filled with metal such as aluminum (Al) to provide the drain electrode **16**. A planarizing insulating film **17** consisting of, for example, organic resin is formed over the entire surface, planarizing the surface. A contact hole is formed in the planarizing insulating film **17** at a location corresponding to the source **13***s*, and an anode **81** of an EL element is then formed over the planarizing insulating film **17** through the contact hole. The anode **81** is composed of ITO (Indium Tin Oxide), and simultaneously serves as the source electrode through its contact with the source **13***s* via the contact hole.

Subsequently, an EL element is formed on the anode **81**.

In the organic EL element, holes injected from the anode **81** and electrons injected from the cathode **87** recombine in the emissive layer which is one layer within the emissive element layer **86** including organic compounds. As a result, organic molecules constituting the emissive layer are excited, generating excitons. Through the process in which these excitons undergo radiation until deactivation, light is emitted from the emissive layer. This light radiates outward through the side of the transparent anode **81** via the transparent insulator substrate **10**, resulting in light emission.

When the EL element is formed as described above, the emissive element layer **86** deposited over the anode **81** is extremely thin, generally at a thickness of approximately less than 2000 Å. The emissive element layer **86** therefore provides poor coverage at uneven portions on the planarizing insulating film **17** at the peripheral portions of the anode **81** (indicated by arrows). The poor coverage may also result at irregularities in the surface created by the TFT through, for example, the thickness of the Al wiring. A problem exists where the emissive element layer **86** becomes disconnected, and the cathode **87** disposed over the emissive element layer and the anode **81** forms a short circuit at the disconnected portion. In such cases, pixels produce deficient displays.

Another existing problem is that an electric field becomes concentrated at the uneven portions created by the thickness of the anode **81**, especially at the edges on the peripheral portions of the anode **81**, thereby speeding up the deterioration of the emissive layer.

A further disadvantage is that some of the emitted light irradiates the TFT underneath the emissive element layer. Because of such light, leakage current of the TFT increases, and stable TFT characteristics and stable display cannot be achieved.

SUMMARY OF THE INVENTION

The present invention was created in light of the above existing disadvantages. The purpose of the present invention is to prevent formation of short circuits between the cathode and the anode due to disconnection in the emissive element caused by the thickness of the anode. Another purpose of the present invention is to provide an EL element and an EL display device which reduces deterioration of the emissive layer due to concentration of electric field at the edges of the anode and which achieves stable display by preventing light from the emissive element layer from reaching the TFT.

The emissive element or the display device of the present invention comprises an emissive region formed by laminating a first electrode, an emissive element layer, and a second electrode. An insulating film is disposed on at least a peripheral portion of the first electrode to separate the first electrode from the emissive element layer and/or the second electrode.

According to another aspect of the present invention, each pixel in the display device is provided with the emissive element. Moreover, the first electrode is separately formed for each pixel, and a peripheral portion of each of the separately formed first electrodes is covered by the insulating film.

In a further aspect of the present invention, the insulating film is disposed between the first electrode and the emissive element layer.

In a different aspect of the present invention, the insulating film overlaps the first electrode along the entire peripheral portion outlining the first electrode.

By providing such insulating film between the first electrode and the emissive element layer and/or the second electrode, it is possible to prevent problems occurring at the uneven portion created by the thickness of the first electrode, such as disconnection of the overlying emissive element layer or the second electrode, and formation of short circuit between the first and the second electrodes. Furthermore, the insulating layer covering the peripheral portion of the first electrode reduces concentration of electric field at this peripheral portion, and thereby reduces characteristics deterioration of the overlying emissive element layer. The effect of reduction in characteristics deterioration is enhanced especially when the entire peripheral portion outlining the first electrode is covered with the insulating film.

According to another aspect of the present invention, the insulating film in the emissive element or the display device covers a peripheral portion of the first electrode, and includes an opening over the associated first electrode. An edge portion of the opening forms a slope.

In the present invention, the edge portion of the opening slopes at, for example, an angle of elevation between 20° and 80° with respect to the horizontal plane of the first electrode.

In a different aspect of the present invention, the emissive element is an electroluminescence element.

This element emits light by controlling electric field. An element using an organic compound in its emissive element layer, namely, an organic EL element, may be employed as the emissive element of the present invention.

According to a further aspect of the present invention, the first electrode in the emissive element or the display device is connected to a thin-film transistor.

In a further different aspect, the first electrode of the emissive element is positioned as a layer above the thin-film transistor with an insulating layer placed between the thin-film transistor and the first electrode for providing interlayer isolation.

According to this arrangement having a thin-film transistor connected to the first electrode of the emissive element, light emission of the emissive element can be controlled by the thin-film transistor. When, for example, each pixel of a display device is provided with the emissive element and such a thin-film transistor, light emission of each pixel can be controlled individually, achieving a high-resolution display.

Another aspect of the present invention is that, in the above emissive element or the display device, the insulating film disposed on at least a peripheral portion of the first electrode and separating the first electrode from the emissive layer and/or the second electrode is a planarizing insulating film.

By separating the first electrode from the emissive layer and/or the second electrode with a planarizing insulating film, concentration of electric field at the peripheral portion of the first electrode can be prevented. At the same time, as levelness is enhanced on the upper surface of the planarizing insulating film, disconnection, formation of short circuits, and concentration of electric field due to irregularities in the surface can be prevented in regions other than the peripheral portion of the first electrode.

A different aspect of the present invention is that, in the emissive element or the display device, the insulating film covering at least a peripheral portion of the first electrode is colored.

The coloring in the present invention is, for example, black.

In a further aspect of the present invention, the insulating film covering at least a peripheral portion of the first electrode possesses a light-shielding property and/or a light-absorbing property.

Another different aspect of the present invention is that, in the emissive element or the display device, the insulating film covering at least a peripheral portion of the first electrode further covers a region where the thin-film transistor connecting with the first electrode is formed.

By coloring the insulating film covering a peripheral portion of the first electrode black, the contrast ratio with respect to the region not covered by the insulating film can be increased. Light-shielding and/or light-absorbing properties of the insulating film can prevent external light or reflected light from the second electrode from entering other adjacent pixels which can result in display blurs and, in the case of a color display, deterioration of color purity caused by mixing of colors from other pixels. Furthermore, light-shielding and/or light-absorbing properties of the insulating film allows prevention of harmful effects on the operation of the TFT driving the emissive element. That is, if light from the emissive element layer reaches the TFT, leakage current of the TFT is likely to increase. At the same time, light from the emissive element layer is also prevented from detouring into and irradiating adjacent display pixels after being reflected off the cathode. Accordingly, an EL display device with an enhanced display quality can be provided.

BRIEF DESCRIPTION OF THE DRAWINGS

FIG. **1** is a plan view illustrating an example of a related art of active type EL display device.

FIG. **2** shows a cross-sectional view of the EL display device of FIG. **1** taken along line II—II.

FIG. **3** shows a plan view of an EL display device according to a first embodiment of the present invention.

FIGS. **4**A and **4**B show cross-sectional views of the EL display device according to the first embodiment of the present invention.

FIG. **5** is a diagram illustrating an example circuit configuration in each pixel of the EL display device of the present invention.

FIG. **6** shows a plan view of an EL display device according to a second embodiment of the present invention.

FIG. **7** shows a cross-sectional view of the EL display device according to the second embodiment of the present invention.

FIG. **8** shows a cross-sectional view of the EL display device according to a third embodiment of the present invention.

DESCRIPTION OF PREFERRED EMBODIMENTS

The display device of the present invention will now be described as embodied in an organic EL display device.

<First Embodiment>

FIG. **3** shows a plan view around a display pixel of an organic EL display device. FIG. **4**A shows a cross-sectional view taken along line I—I in FIG. **3**, and FIG. **4**B illustrates a cross-sectional view taken along line II—II in FIG. **3**.

As shown in FIGS. **3**, **4**A, and **4**B, a display pixel **110** is formed in a region surrounded by gate signal lines **51** and drain signal lines **52**. The pixels **110** are arranged in a matrix.

The display pixel **110** includes an organic EL element **60** which is a self-luminous element, a switching TFT **30** for controlling the timing for supplying current to the organic

EL element **60**, a driving TFT **40** for supplying current to the organic EL element **60**, and a storage capacitor. The organic EL element **60** comprises an anode **61** which is the first electrode, an emissive element layer **66** including emissive material, and a cathode **67** which is the second electrode.

The first TFT **30** (for switching) is disposed near a junction of the two signal lines **51**, **52**. The source **33**s of the TFT **30** serves as the capacitive electrode **55** that provides capacitance in conjunction with a storage capacitor electrode line **54**. The source **33***s* is connected to the gate **41** of the second TFT **40** (for driving the EL element). The source **43***s* of the second TFT is connected to the anode **61** of the organic EL element **60**. The drain **43***d*, on the other hand, is connected to the drive power line **53** which supplies power to the organic EL element **60**.

The storage capacitor electrode line **54** is arranged in parallel with the gate signal line **51**. The storage capacitor electrode line **54** may be made of chromium, and capacitance is formed by storing electric charge between the capacitive electrodes **55** connected to the source **33***s* of the TFT via the gate insulating film **12**. The storage capacitor is provided for retaining the voltage applied on the gate electrode **41** of the second TFT **40**.

As shown in FIGS. **4**A and **4**B, the organic EL display device is formed by sequentially laminating TFT and the organic EL element on a substrate **10** which may be an insulator substrate made of glass or synthetic resin, a conductive substrate, or a semiconductor substrate. When a conductive substrate or a semiconductor substrate is used as the substrate **10**, an insulating film made of materials such as SiO_2 or SiN is deposited on the substrate **10** before forming the first and the second TFT and the organic EL element. Both of the TFTs have the so-called top gate structure wherein the gate electrodes are arranged over the active layers with the gate insulating film disposed in between.

The first TFT **30** for switching will now be described.

As shown in FIG. **4**A, amorphous silicon film (referred to hereinafter as "a-Si film") is grown by CVD or a similar method on an insulator substrate **10** which may be made of quartz glass or non-alkali glass. The a-Si film is irradiated with a laser beam for melting and recrystallization into a polycrystalline silicon film (referred to hereinafter as "p-Si film"). This film serves as the active layer **33**. Over this layer, a single layer of SiO_2 film or SiN film, or a lamination of those films, is formed to create the gate insulating film **32**. Disposed further on top are the gate signal lines **51** also serving as the gate electrodes **31** which are made of refractory metal such as Cr and Mo, and the drain signal lines **52** composed of Al. Also arranged are the drive power lines **53** composed of Al for supplying drive power to the organic EL element.

In the active layer **33**, channels **33**c are positioned below the gate electrodes **31**. Ion doping is performed using the gate electrodes **31** formed above the channels **33***c* as masks. Regions on both sides of the gate electrodes **31** are then covered with a resist, and further ion doping is conducted. As a result, low-concentration regions **33**LD are disposed on both sides of the channels **33***c*. Furthermore, a source **33***s* and a drain **33***d*, which are high-concentration regions, are formed on the outer sides of the low-concentration regions **33**LD, respectively. The described structure is the so-called LDD structure.

Subsequently, an interlayer insulating film **15** comprising a sequential lamination of a SiO_2 film, a SiN film, and a SiO_2 film is formed to cover the entire region over the gate insulating film **32** and the active layer **33**. A contact hole formed with respect to the drain **33***d* is filled with metal such as Al to provide the drain electrode **36**. Furthermore, a planarizing insulating film **17** consisting of organic resin is formed over the entire surface, planarizing the surface.

The second TFT **40** for driving the organic EL element will next be described.

As shown in FIG. **4**B, an active layer **43** is formed using p-Si film obtained by irradiating a-Si film with a laser beam and allowing it to polycrystallize on an insulator substrate **10** which may be made of quartz glass or non-alkali glass. Sequentially formed over this layer are a gate insulating film **32** and a gate electrode **41** composed of a refractory metal such as Cr and Mo. In the active layer **43**, channels **43***c* are provided, and a source **43***s* and a drain **43***d* are formed on both sides of the channels **43***c*, respectively. An interlayer insulating film **15** comprising a sequential lamination of a SiO_2 film, a SiN film, and a SiO_2 film is formed to cover the entire region over the gate insulating film **32** and the active layer **43**. A contact hole formed with respect to the drain **43***d* is filled with metal such as Al to provide a drive power line **53** connected with a drive power supply. In addition, a planarizing insulating film **17** consisting of, for example, organic resin is formed over the entire surface, planarizing the surface. A contact hole is formed in the planarizing insulating film **17** at a location corresponding to the source **43***s*, and a transparent electrode composed of ITO and contacting the source **43***s* via the contact hole, namely, the anode **61** of the EL element, is formed over the planarizing insulating film **17**. The anode **61** is separately formed for each display pixel in the form of discrete islands.

As shown by slanted lines in FIG. **4**B, an insulating film **19** is disposed so that its edge portions lie on the peripheral portion of the anode **61**. The insulating film **19** overlaps the anode **61** along the entire periphery of the anode **61**. In other words, an insulating film **19** having an opening in a region corresponding to a portion of the anode **61** is formed over the anode and the planarizing insulating film **17**. Accordingly, at the peripheral portion of the anode **61**, the insulating film **19** separates the peripheral portion of the anode **61** from the emissive element layer **66** and the cathode **67**. The insulating film **19** is formed such that the emissive layer does not become disconnected due to an uneven surface created by the thickness of the anode **61** at its peripheral portion, and such that concentration of electric field does not occur at the peripheral edges of the anode **61**. It is sufficient if the insulating film **19** separates the peripheral portion of the anode **61** from one of either the emissive element layer **66** or the cathode. The insulating film **19** may be composed of a single layer of SiO_2 film or SiN film, or a lamination of those films. The insulating film **19** may also be a planarizing film composed of SOG film, or a planarizing insulating film made of photosensitive resin. It is preferable to employ a planarizing insulating film as the insulating film **19** because the cathode **67** can then be formed flatly in an overlying layer, preventing disconnection.

The insulating film **19** has an opening over the anode **61**, and the edge portion of the opening forms a slope with respect to the surface of the anode **61**. It is preferable that the angle of elevation of the slope is of such a degree that the emissive element layer **66** formed over the anode **61** does not become disconnected near the edges of the opening of the insulating film **19**. When the angle of elevation is too small, the area of the anode **61** covered by the insulating film **19** is enlarged, leaving only a small area for light emission. When the angle of elevation is too large, the emissive element layer **66** may become disconnected. The angle of elevation ($\theta 1$) is therefore set between 20° and 80°. The

angle of elevation θ1 is preferably between 30° and 70°, more preferably between 30° and 60°, and most preferably between 40° and 50°.

The emissive element layer **66** and the, cathode **67** are overlaid on the insulating film **19** and the anode **61** exposed from the opening in the insulating film **19**.

It is to be noted that the insulating film **19** is not transparent but colored. The coloring is possible by, for example, applying resin such as a color resist. The color used for the coloring may be any color that can shield the emitted light, but is preferably black. Using black allows absorption of light travelling to the metal cathode **67** and reflecting off the cathode **67**. Accordingly, even in the case of an extremely fine EL display device in which adjacent display pixels are located very close together, light from an emissive element layer of other adjacent display pixels can be prevented from being reflected of f the cathode of a surrounded pixel and detouring into the pixel.

The coloring of the insulating film may also be implemented by mixing, for example, black pigment into a resist comprising a viscous resin, and applying the resist.

According to the above-described structure, the opening **68** which serves as the contact hole in the insulating film **19** corresponds to the white portion without slanted lines in FIG. **1**. The insulating film **19** overlaps the anode **61** at the peripheral portion of the anode **61**.

The organic EL element **60** is formed by first laminating the anode **61** constituted by a transparent electrode made of ITO or similar material. The emissive element layer **66** is then superimposed. The emissive element layer **66** comprises a first hole-transport layer **62** composed of a material such as MTDATA, a second hole-transport layer **63** composed of a material such as TPD, an emissive layer **64** in the form of discrete islands composed of, for example, $Bebq_2$ including quinacridone derivatives, and an electron transport layer **65** composed of $Bebq_2$ or similar material. Subsequently, the cathode **67** is formed which may be composed of a lamination of lithium fluoride (LiF) and Al, an alloy of Al and Li, an alloy of magnesium (Mg) and silver (Ag), or an alloy of Mg and In. All of the above-mentioned layers of the organic EL element **60** are laminated in the described order. The region where all these layers overlap is the emissive region. By selecting materials that emit light of particular colors as the emissive material used in the emissive element layer **66**, especially in the emissive layer **64**, display pixels can be made to emit light of the respective colors. The organic EL display device is formed by arranging those display pixels of the respective colors in a matrix.

An example of the electrical configuration of each of the pixels in the organic EL display device is shown in FIG. **5**. Referring to FIG. **5**, the switching TFT **30** is turned on when a gate signal is applied on the gate electrode **31** via the gate signal line **51**. As a result, a drive signal from the drive signal line **52** is retained in a capacitor **90**. The retained voltage is then supplied to the gate electrode **41** of the driving TFT **40**. The drain electrode of the TFT **40** is connected to the drive power line **53**, as described above. The TFT **40** allows current to be supplied from the drive power supply to the EL element **60** by an amount corresponding to the capacitor-held voltage applied to the gate electrode **41**. The EL element **60** emits light accordingly.

Providing the insulating film **19** at the peripheral portion of the anode **61** as described prevents disconnection of the emissive element layer **66** due to uneven portions created by the thickness of the anode **61**, and therefore prevents formation of a short circuit between the anode **61** and the cathode **67**. Furthermore, the insulating layer **19** reduces concentration of electric field at the edges of the anode **61**, thereby suppressing deterioration of the emissive element layer **66**.

In addition, by providing the colored insulating film **19** over a region including the peripheral portion of the transparent anode and the areas over the TFT, light emitted from the emissive element layer **66** is prevented from reaching the TFT underlying the emissive element layer **66**. Increase in leakage current of the TFT can thereby be avoided.

<Second Embodiment>

FIG. **6** is a plan view of one display pixel of an organic EL display device including an organic EL element and TFT according to an embodiment of the present invention. FIG. **7** shows a cross-sectional view taken along line I—I in FIG. **6**.

The present embodiment differs from the first embodiment in that only one TFT is provided for driving the EL element **60**, and that the anode **61** is formed over the interlayer insulating film **15**.

As shown in FIGS. **6** and **7**, TFT **30** is disposed near a junction of a gate signal line **51** and a drain signal line **52**. The source **13***s* of the TFT **30** is connected to the anode **61** of the organic EL element **60**.

As shown in FIG. **7**, the display pixel **110** is formed by sequentially laminating TFT and an organic EL element on a substrate **10** which may be an insulator substrate made of glass or synthetic resin, a conductive substrate, or a semiconductor substrate. When a conductive substrate or a semiconductor substrate is used as the substrate **10**, an insulating film **32** made of materials such as SiO_2 or SiN is deposited on the substrate **10** before forming the TFT.

As shown in FIG. **7**, gate electrodes **11** composed of refractory metal such as Cr or Mo and a gate signal line **51** connected to the gate electrodes **11** are formed on the insulator substrate **10** which may be made of quartz glass or non-alkali glass.

Subsequently, a gate insulating film **12** and an active layer **13** made of p-Si film are sequentially formed.

In the active layer **13**, channels **13***c* are formed in a position above the gate electrodes **11**. Ion doping is performed using stopper insulating film **14** formed on the channels **13***c* as masks. Regions on both sides of the gate electrodes **11** are then covered with a resist, and further ion doping is conducted. As a result, low-concentration regions **13**LD are disposed on both sides of the channels **13***c*. Furthermore, a source **13***s* and a drain **13***d*, which are high-concentration regions, are formed on the outer sides of the low-concentration regions **13**LD, respectively. The described structure is the so-called LDD structure.

Subsequently, an interlayer insulating film **15** comprising a sequential lamination of a SiO_2 film, a SiN film, and a SiO_2 film is formed to cover the entire region over the gate insulating film **12**, the active layer **13**, and the stopper insulating film **14**.

On top of the interlayer insulating film **15**, an anode **61** is formed which is a transparent electrode composed of a transparent conductive material such as ITO. Subsequently, contact holes formed with respect to the drain **13***d* and the source **13***s* are filled with metal such as Al to provide the drain electrode **16** and the source electrode **18**. It is to be noted that the source electrode **18** is made to contact the transparent anode **61**.

A planarizing insulating film **17** composed of resin is then formed over the entire region covering the anode **61**, the source electrode **18**, the drain electrode **16**, and the interlayer insulating film **15**, thereby planarizing the surface. An opening is formed in the planarizing insulating film **17** at a

location corresponding to the anode **61**. As shown by slanted lines in FIG. **6**, the opening is aligned such that the planarizing insulating film **17** covers at least the peripheral portion of the anode **61**.

It is to be noted that the planarizing insulating film **17** is not transparent but colored. The coloring is made possible by, for example, applying resin such as a color resist. The color used for the coloring may be any color that can shield the emitted light, but is preferably black. Using black allows absorption of light that travels to the metal cathode **67** and reflects off the cathode **67**. Accordingly, even in a case of an extremely fine EL display device where adjacent display pixels are located very close together, light from an emissive element layer of adjacent display pixels can be prevented from being reflected off the cathode of a surrounded pixel and detouring into the pixel.

The coloring on the insulating film may also be implemented by mixing, for example, black pigment into a resist comprising a viscous resin, and applying the resist.

By providing such colored planarizing insulating film **17** over a region including the peripheral portions of the transparent anode and the area over the TFT, light emitted from the emissive element layer **66** is prevented from reaching the TFT underneath the emissive element layer **66**. Increase in leakage current of the TFT due to light from the EL element **60** can thereby be avoided.

Further, at the peripheral portion of the anode **61**, the side wall of the opening in the planarizing insulating film **17** forms a slope with respect to the surface of the anode **61**, generating an angle of elevation θ2 with respect to the anode **61**.

It is preferable that the angle of elevation is at a degree such that the emissive element layer **66** formed over the anode **61** does not become disconnected due to the an uneven surface at the opening **68**. When the angle of elevation is too small, the area of the anode **61** covered by the planarizing insulating film **17** is enlarged, leaving only a small emissive area. When the angle of elevation is too large, the emissive element layer **66** may become disconnected at the uneven surface at the opening **68**. The angle of elevation (θ2) is therefore set between 20° to 80°. The angle of elevation θ2 is preferably between 30° and 70°, more preferably between 30° and 60°, and further preferably between 40° and 50°.

When the insulating film **17** is made of photosensitive resin, the slope of the insulating film **17** can be formed by performing annealing after exposing and developing predetermined areas using a mask. When the insulating film **17** is a SOG film, the slope can be formed by performing dry etching on the film **17** using a chlorine class etchant gas.

The structure of the organic EL element **60** is similar to the above-described first embodiment. Provided between the anode **61** and the cathode **67** in the region covering the opening **68** of the insulating film **17** is the emissive element layer **66** which comprises, for example, a first hole-transport layer composed of MTDATA, a second hole-transport layer made of TPD, an emissive layer made of $Bebq_2$ including quinacridone derivatives, and an electron transport layer formed of $Bebq_2$. The emissive element layer **66** connects to the anode **61** through the contact hole (opening) formed in the planarizing insulating film **17**.

In the organic EL element, holes injected from the anode and electrons injected from the cathode recombine within the emissive layer. As a result, organic molecules constituting the emissive layer are excited, generating excitons. Through the process in which these excitons undergo radiation until deactivation, light is emitted from the emissive layer. This light radiates outward through the transparent anode and the transparent insulator substrate, resulting in light emission. In the present embodiment, the emitted light of the EL element shines downwardly.

Providing the planarizing insulating film **17** at the peripheral portion of the anode **61** as described prevents disconnection of the emissive element layer **66** due to uneven portions created by the thickness of the anode **61**, and therefore prevents formation of a short circuit between the anode **61** and the cathode **67**. Furthermore, the planarizing insulating layer **17** reduces concentration of electric field at the edges of the anode **61**, thereby suppressing deterioration of the emissive element layer **66**. Moreover, by providing the colored insulating film **19** over a region including at least the peripheral portion of the transparent anode and the area over the TFT, light emitted from the emissive element layer **66** is prevented from reaching the TFT underneath the emissive element layer **66**. Increase in leakage current of the TFT can thereby be avoided.

<Third Embodiment>

FIG. **8** is a cross-sectional view of an organic EL display device according to a third embodiment of the present invention. The plan configuration of this embodiment is identical with the above-described FIG. **6**, and FIG. **8** shows a cross-sectional view taken along line I—I in FIG. **6**.

As shown in FIG. **8**, the present embodiment differs from the second embodiment mainly in the structure between the source region **13***s* of TFT **30** and the anode **61** of the EL element. In the present embodiment, the contact holes formed in the interlayer insulating film **15** are filled with metal such as Al to provide the drain electrode **16** and the source electrode **18**. The planarizing insulating film **17** is then deposited to planarize the surface. A contact hole is formed in the planarizing insulating film **17** at a location corresponding to the source electrode. Through this contact hole, the transparent electrode **61** is formed which is composed of a transparent conductive material such as ITO. Subsequently, the insulating film **19** is disposed over an extended area so as to overlap the peripheral portions of the transparent electrode. To summarize, the anode **61** is formed over the planarizing insulating film **17**, and the insulating film **19** is formed covering the peripheral portion of the anode **61**. In other words, the present embodiment differs from the second embodiment in that the transparent electrode **61** is disposed in a different layer above the drain electrode **16** and the source electrode **18** separated by the planarizing insulating film **17**.

At the peripheral portion of the anode **61**, the insulating film **19** forms a slope with respect to the surface of the anode **61**. It is preferable that this angle of elevation is of such a degree that the emissive element layer **66** formed over the anode **61** does not become disconnected. When the angle of elevation is too small, the area of the anode **61** covered by the insulating film **19** is enlarged, leaving only a small area for light emission. When the angle of elevation is too large, the emissive element layer **66** may become disconnected. The angle of elevation (θ3) is therefore set between 20° to 80°. The angle of elevation θ3 is preferably between 30° and 70°, more preferably between 30° and 60°, and most preferably between 40° and 50°. When the angle of elevation is too small, the area of the anode **61** covered by the insulating film **19** is enlarged, while, when the angle of elevation is too large, the emissive element layer **66** may become disconnected.

It is to be noted that the insulating film **19** is not transparent but colored. The coloring is possible by, for example, applying resin such as a color resist. The color

used for the coloring may be any color that can shield the emitted light, but is preferably black. Using black allows absorption of light that travels to the metal cathode **67** and reflects off the cathode **67**. Accordingly, even in a case of an extremely fine EL display device wherein adjacent display pixels are located very close together, light from emissive element layer of adjacent display pixels can be prevented from being reflected off the cathode of a surrounded pixel and detouring into the pixel.

The coloring on the insulating film may also be implemented by mixing, for example, black pigment into a resist comprising a viscous resin, and applying the resist.

The opening **68** which serves as the contact hole in the insulating film **19** corresponds to the white portion without slanted lines in FIG. **6**. The insulating film **19** overlaps the anode **61** at the peripheral portion of the anode **61**.

The insulating film **19** may be composed of a single layer of SiO_2 film or SiN film, or a lamination of those films. The insulating film **19** may also be a planarizing film composed of SOG film, or a planarizing insulating film made of photosensitive resin. It is preferable to employ a planarizing insulating film as the insulating film **19** because the cathode **67** can then be formed flatly in an overlying layer, preventing disconnection.

As in the above-described embodiments, the present embodiment also prevents disconnection of the emissive element layer **66** due to uneven portions created by the thickness of the anode **61**, and therefore prevents formation of a short circuit between the anode **61** and the cathode **67**. Further, according to the present embodiment, as the surface of the layer over the TFT is planarized, it is possible to form the transparent electrode **61** over the TFT. Moreover, the present embodiment reduces concentration of electric field at the edges of the anode **61**, thereby suppressing deterioration of the emissive element layer **66**. In addition, by providing the colored insulating film **19** over a region including at least the peripheral portion of the transparent anode and the areas over the TFT, light emitted from the emissive element layer **66** is prevented from reaching the TFT underlying the emissive element layer **66**. Increase in leakage current of the TFT can thereby be avoided.

In the above embodiments, the TFTs were described as having either the so-called bottom gate structure with the gate electrodes disposed under the active layer or the top gate structure. It is noted that identical effects can be achieved in the present invention using either of these structures. Although p-Si film was used as the active layer in the above description, small grain size crystalline silicon film or amorphous silicon may also be used.

In the above embodiments, the insulating film **19** and the planarizing insulating film **17** were illustrated as being colored. However, regarding prevention of disconnection of the emissive element layer due to the thickness of the anode to avoid formation of a short circuit between the anode **61** and the cathode **67**, and reduction of concentration of electric field at the edges of the anode to suppress deterioration of the emissive element layer, those effects can be similarly achieved even when the insulating film **19** and the planarizing insulating film **17** are transparent.

What is claimed is:

1. An emissive element comprising a first electrode, an emissive element layer, a second electrode, and an insulating film wherein:

said insulating film is disposed on at least a peripheral portion of said first electrode for separating said first electrode from said emissive element layer and/or said second electrode, and said insulating film has a planarized surface.

2. The emissive element defined in claim **1**, wherein:

said insulating film is formed between said first electrode and said emissive element layer.

3. The emissive element defined in claim **1**, wherein:

said insulating film covers the peripheral portion of said first electrode, and includes an opening over said first electrode, said opening having an edge portion forming a slope.

4. The emissive element defined in claim **3**, wherein:

said edge portion of said opening slopes at an angle of elevation between 20° and 80° with respect to a horizontal plane of said first electrode.

5. The emissive element defined in claim **1**, wherein:

said insulating film overlaps said first electrode along entire peripheral portion outlining said first electrode.

6. The emissive element defined in claim **1**, wherein:

said emissive element is an electroluminescence element.

7. The emissive element defined in claim **1**, wherein:

said first electrode is connected to a thin-film transistor.

8. The emissive element defined in claim **1**, wherein:

said insulating film is colored.

9. The emissive element defined in claim **8**, wherein:

said insulating film is colored black.

10. The emissive element defined in claim **1**, wherein:

said insulating film possesses a light-shielding property and/or a light-absorbing property.

11. An emissive element, comprising a first electrode, an emissive element layer, and a second electrode, wherein:

an insulating film is disposed on at least a peripheral portion of said first electrode for separating said first electrode from said emissive element layer and/or said second electrode; and

said first electrode is connected to a thin-film transistor, and said first electrode is located in a layer over said thin-film transistor with an insulating film for interlayer isolation disposed between said first electrode and said thin-film transistor.

12. An emissive element, comprising a first electrode, an emissive element layer, and a second electrode, wherein:

an insulating film is disposed on at least a peripheral portion of said first electrode for separating said first electrode from said emissive element layer and/or said second electrode wherein:

said film possess a light-shielding property and/or a light-absorbing property; and

a thin-film transistor is connected to said first electrode and disposed in a layer below said first electrode; and

in addition to covering a peripheral portion of said first electrode, said insulating film covers a region where said thin-film transistor is formed.

13. A display device, comprising

an emissive element comprising a first electrode, an emissive element layer, a second electrode, and an insulating film, wherein:

said insulating film is disposed on at least a peripheral portion of said first electrode for separating said first electrode from said emissive element layer and/or said second electrode, and said insulating film has a planarized surface.

14. The display device defined in claim **13**, wherein:

said insulating film possesses a light-shielding property and/or a light-absorbing property.

15. The display device defined in claim **13**, wherein:

said insulating film covers the peripheral portion of said first electrode, and includes an opening over said first electrode, said opening having an edge portion forming a slope.

16. The display device defined in claim 15, wherein:

said edge portion of said opening slopes at an angle of elevation between 20° and 80° with respect to a horizontal plane of said first electrode.

17. The display device defined in claim 13, wherein:

said emissive element is an electroluminescence element.

18. The display device defined in claim 13, wherein:

said first electrode is connected to a thin-film transistor.

19. The display device defined in claim 13, wherein:

said insulating film is a planarizing insulating film, and covers a peripheral portion of said first electrode.

20. The display device defined in claim 13, wherein:

said insulating film is colored.

21. The display device defined in claim 20, wherein:

said insulating film is colored black.

22. A display device, comprising an emissive element including a first electrode, an emissive element layer, and a second electrode, wherein:

an insulating film is disposed on at least a peripheral portion of said first electrode for separating said first electrode from said emissive element layer and/or said second electrode; and

said first electrode is connected to a thin-film transistor; and

said first electrode is located in a layer over said thin-film transistor with an insulating film for interlayer isolation disposed between said first electrode and said thin-film transistor.

23. A display device, comprising an emissive element including a first electrode, an emissive element layer, and a second electrode, wherein:

an insulating film is disposed on at least a peripheral portion of said first electrode for separating said first electrode form said emissive element layer and/or said second electrode; and

said insulating film possesses a light-shielding property and/or a light-absorbing property; and

a thin-film transistor is connected to said first electrode and disposed in a layer below said first electrode; and

in addition to covering a peripheral portion of said first electrode, said insulating film disposed between said first electrode and said emissive element layer covers a region where said thin-film transistor is formed.

24. An emissive element comprising a first electrode, an emissive element layer, a second electrode, an insulating film, and a planarizing insulating film, wherein:

said insulating film is disposed on at least a peripheral portion of said first electrode for separating said first electrode from said emissive element layer and/or said second electrode; and

said planarizing insulating film is disposed under said first electrode for planarizing an upper surface thereof.

25. The emissive element defined in claim 24, wherein:

said insulating film is a planarized surface.

26. The emissive element defined in claim 24, wherein:

said insulating film is formed between said first electrode and said emissive element layer.

27. The emissive element defined in claim 24, wherein:

said insulating film covers the peripheral portion of said first electrode, and includes an opening over said first electrode, said opening having an edge portion forming a slope.

28. The emissive element defined in claim 24, wherein:

said edge portion of said opening slopes at an angle of elevation between 20° and 80° with respect to a horizontal plane of said first electrode.

29. The emissive element defined in claim 24, wherein:

said insulating film overlaps said first electrode along entire peripheral portion outlining said first electrode.

30. The emissive element defined in claim 24, wherein:

said emissive element is an electroluminescence element.

31. The emissive element defined in claim 24, wherein:

said first electrode is connected to a thin-film transistor.

32. The emissive element defined in claim 31, wherein:

said first electrode is located in a layer over said thin-film transistor with an insulating film for interlayer isolation disposed between said first electrode and said thin-film transistor.

33. The emissive element defined in claim 24, wherein:

said insulating film is colored.

34. The emissive element defined in claim 33, wherein:

said insulating film is colored black.

35. The emissive element defined in claim 24, wherein:

said insulating film possesses a light-shielding property and/or a light-absorbing property.

36. The emissive element defmed in claim 35, further comprising:

a thin-film transistor connected to said first electrode and disposed in a layer below said first electrode, wherein, in addition to covering a peripheral portion of said first electrode, said insulating film covers a region where said thin-film transistor is formed.

37. A display device comprising:

an emissive element including a first electrode, an emissive element layer, a second electrode, an insulating film, and a planarizing insulating film, wherein:

said insulating film is disposed on at least a peripheral portion of said first electrode for separating said first electrode from said emissive element layer and/or said second electrode; and

said planarizing insulating film is disposed under said first electrode.

38. The display device defined in claim 37, wherein:

said insulating film has a planarized surface.

39. The display device defined in claim 37, wherein:

said insulating film is formed between said first electrode and said emissive element layer.

40. The display device defined in claim 37, wherein:

said insulating film covers the peripheral portion of said first electrode, and includes an opening over said first electrode, said opening having an edge portion forming a slope.

41. The display device defined in claim 37, wherein:

said edge portion of said opening slopes at an angle of elevation between 20° and 80° with respect to a horizontal plane of said first electrode.

42. The display device defined in claim 37, wherein:

said insulating film overlaps said first electrode along entire peripheral portion outlining said first electrode.

43. The display device defined in claim 37, wherein:

said emissive element is an electroluminescence element.

44. The display device defined in claim 37, wherein:

said first electrode is connected to a thin-film transistor.

45. The display device defined in claim 44, wherein:

said first electrode is located in a layer over said thin-film transistor with an insulating film for interlayer isolation disposed between said first electrode and said thin-film transistor.

46. The display device defined in claim 37, wherein:

said insulating film is colored.

47. The display device defined in claim **46**, wherein:

said insulating film is colored black.

48. The display device defined in claim, **37**, wherein:

said insulating film possesses a light-shielding property and/or a light-absorbing property.

49. The display device defined in claim **48**, further comprising:

a thin-film transistor connected to said first electrode and disposed in a layer below said first electrode, wherein

in addition to covering a peripheral portion of said first electrode, said insulating film covers a region where said thin-film transistor is formed.

* * * * *

UNITED STATES PATENT AND TRADEMARK OFFICE

CERTIFICATE OF CORRECTION

PATENT NO. : 6,246,179 B1
DATED : June 12, 2001
INVENTOR(S) : Tsutomu Yamada

It is certified that error appears in the above-identified patent and that said Letters Patent is hereby corrected as shown below:

Title page,
Item [30], **Foreign Application Priority Data** delete "Dec. 2, 1998" and insert therefor -- Dec. 1, 1998 --

Column 2,
Line 1, after "element", insert -- 80 --
Line 2, after "element", insert -- 80 --
Line 12, after "element", insert -- 80 --

Column 7,
Line 4, after "and", delete "the," and insert therefor -- the --
Line 17, after "reflected", delete "of f" and insert therefor -- off --

Column 14,
Line 20, after "element", delete "defmed" and insert therefor -- defined --

Signed and Sealed this

Eleventh Day of June, 2002

Attest:

Attesting Officer

JAMES E. ROGAN
Director of the United States Patent and Trademark Office