(51)
FEDERAL REPUBLIC OF GERMANY Int. cl.: B CO s, **5/CO**

GERMAN PATENT OFFICE German cl.: **63** c, **91**

(52)

[stamp: illegible]

(10) **Patent Application** **1 608 208**
(11) File number: P 16 80 208.7 (P 44154)
(21) Filing date: March 2, 1968
(22) Publication date: **December 23, 1971**
(43)

Exhibition priority: --

(30) Union priority --
(32) Date: --
(33) Country: --
(31) File number: --

(54) Description: Multipurpose device, in particular handheld vehicle care device

(61) Supplement to: --
(62) Removal from: --
(71) Applicant: Alfred Paul KG, 7301 Zell

Representative according to Section 16 of the German Patent Act (PatG) --

(72) Named as the inventor. Rebel, Joachim, 7313 Reichenbach

Notification pursuant to Art. 7 Section 1 (2) (1) of the Act of September 4, 1967 (German Federal Gazette I, p. 960)
November 11, 1969

DT 1680 208

[illegible text]

12.71 109 852/361 9 70

[stamp: ORIGINAL INSPECTED]

PATENT ATTORNEY
DIPL.-ING. W. GRÄMKOW
7 Stuttgart – Bad Cannstatt
Marktstraße 3 · Phone 567261
Bank Accounts:
Deutsche Bank AG, Bad Cannstatt Branch, No. 219915
Städt. Girokasse Stuttgart, No. 2090616
Canstatter Volksbank, Stuttgart-Bad Cannstatt No. 429
Post Office Bank Account: Stuttgart 40734

7 Stuttgart-Bad Cannstatt,

March 1, 1968
Pü-Bt 3/4

P.70

Applicant:

Alfred Paul KG, Esslingen-Zell a.N., Alleenstraße 29

"Multipurpose device, in particular handheld vehicle care device"

For vehicle care purposes, the vehicle owner needs several devices such as a water hose with a brush, polishing cloths, a vacuum cleaner, and the like.

The object of the invention is above all to provide the vehicle owner with a multipurpose device with which said owner can carry out the various care tasks quickly and without effort and which does not require a great deal of storage space, so that it can be conveniently accommodated in the trunk of a motor vehicle, for example.

Accordingly, the invention relates to a multipurpose device, which is designed in particular as a handheld vehicle care device and which is characterized in that the device comprises a motor-driven vacuum cleaner, a connecting device, connected or connectable to the drive of the vacuum cleaner, a tool drive, for example for a polishing brush, and/or a water pump connected or connectable to the drive of the vacuum cleaner.

According to a further feature of the invention, the connecting shaft for the tool drive is connected to the shaft of the drive motor by means of a reduction gear, which can preferably be turned on and off.

In a particular embodiment of the multipurpose device, the suction fan is coupled to the drive shaft of a reversible electric motor for operation in both directions of rotation, while the connecting shaft for the tool drive and the drive shaft for the water pump are connected to the electric motor by means of a freewheel gear that only operates in one direction of rotation. By inserting a freewheel gear between the motor and the auxiliary devices, only the blower or possibly another required device is driven in one direction of rotation, while the other devices are switched off, so that the full power of the motor is available to the blower or the other device operated and a loss of power of the motor caused by idling devices is avoided, in particular in connection with a battery operation. The motor, gear, and auxiliary devices are interconnected, for example, in such a way that when the motor is running counterclockwise, only the suction fan is operated, and when the motor is running clockwise, the suction fan and, via the freewheel gear, the water pump and the connecting device for the tool drive, which can be disconnected from the gear if necessary, are operated; when running clockwise, for example, the suction fan only has a small air delivery volume, which serves to cool the motor and therefore does not lead to any loss of power.

In a further embodiment of the invention, the drive motor is arranged in the vacuum collection chamber, which results in a space-saving and handy design of the device.

The conical attachment, which can be screwed to the housing of the device and is used to collect the dust, provides an additional means of holding the multipurpose device in addition to the handle, for example when using it as a polishing device. In a lightweight design, the latter can therefore be operated with one hand.

The water pump of the device, which is preferably designed as a self-priming gear pump, can be connected to a brush as well as a sprayer, a nozzle, for example for pest control or similar purposes.

Two embodiments of the invention are shown in the drawing.

Fig. 1 shows a schematic longitudinal section of a first embodiment of the multipurpose device,
Fig. 2 and 3 show the multipurpose device with different attachments connected to it,
Fig. 4 shows a longitudinal section of a second embodiment of the multipurpose device and
Fig. 5 shows a cross section according to line 5-5 of Fig. 4.

[stamp: BAD ORIGINAL]

The pistol-shaped housing 11 of the multipurpose device comprises a central part 12, which also serves as a handle 13, which accommodates the electrical component with the electric motor 14 and the switch 15, e.g., a quick-break or snap-action switch, a front part 16, and a rear part 17. The suction fan 20 of a vacuum cleaner 19 is wedged onto the front output shaft 18a of the electric motor, which sucks in the air and the dust through the suction nozzle 21 and the suction connection 22 and, if necessary, also serves as a cooling fan for the electric motor 14. The dust settles in the dust bag 23 and the air escapes through the slots 24 (Fig. 2) arranged on the circumference of the housing 11. The components 20, 21, 22, and 23 of the vacuum cleaner 19 are accommodated in the front part 16 of the housing 11. The suction nozzle 21 is removably attached to the suction connection 22 and said connection in turn is connected to the front housing part 16. The dust bag 23 is detachably attached to the suction connection 22 and can be removed from the housing 11 together with said connection. The opening 25 for the suction connection 22 can be closed with a cover 51 (Fig. 3), especially when using the device to drive a tool, so that no dirt can enter the housing.

The connecting shaft 27 for the tool drive 26 can be driven by the shaft 18 of the electric motor 14 via a reduction gear 28 which can be switched on and off and, for this purpose, can be coupled to the front output shaft 18a or uncoupled from the latter by means of a switching element 29. The connecting shaft 27 for the tool drive is arranged parallel or approximately parallel next to the removable suction

nozzle 21 for the vacuum cleaner 19 on the front housing part 16 of the device and is, at its front end 30, designed as a coupling, for example with a slot 31 for an insert shaft.

The water pump 32 is arranged on the side of the drive motor 14 opposite the suction fan 20 in the rear part 17 of the housing 11 and directly on the rear output shaft 18b of the motor 14. The pump 32 is separated from the rest of the housing 11 by a wall 33 and has a suction nozzle 34 and a pressure nozzle 35, both of which are provided with external threads. The shaft 18b of the motor 14 is sealed off from the separating wall 33 of the pump housing 36, which is detachably attached to the housing 11 by a stuffing box 37. The water pump 32, which is used, for example, to operate a washing brush, is arranged in the rear part 17 of the housing 11. The water pump 32, which is used, for example, to operate a washing brush, a spray hose, a sprayer or the like, is designed as a rotary pump, for example as a centrifugal, gear, or screw pump. A fan 41 mounted on the rear output shaft 18b can be used to cool the motor. The housing is preferably made of plastic.

On the upper side 38 of the housing 11 is a suspension handle 39, by means of which the device (as shown in Fig. 2) can be suspended upright in a container with liquid, and which can be used, for example, to determine the level of the liquid at the same time.

The air slots 24 are arranged in front of the bearing surface 40 of the suspension handle 39 on the circumference of the housing 11 in such a way that

they are located above the edge 43 of the container when the device is suspended in a container with liquid 42 and therefore no water can enter the housing 11 through them. The water is sucked in by the pump through a hose 45 connected to the suction nozzle 34 and passes through a pressure hose 46 and a distributor 47 to a washing brush 48 and/or a camping shower 49.

Fig. 3 shows the device 10 with a polishing brush 50 connected to the tool drive 26. The suction connection 22 with a suction nozzle 21 and a dust bag 23 were removed and the intake opening 25 is closed by a cover 51 so that no polishing dust can enter the device.

Fig. 4 and 5 show an embodiment 110 of the multipurpose device in which the connecting shaft 127 for the tool drive 126 and the water pump 132 are arranged in the rear part 117 of the housing 111. The tool drive 126 is connected to the output shaft 118 of the motor 114 or its extension 118a via a reduction gear 152 and the freewheel gear 153, while the gear pump 132 is connected directly via the freewheel gear to the output shaft 118 of the motor 114 or its extension 118a. The side wall 154 of the pump chamber 155 is formed by a spring-loaded, liftable plate 156 in such a way that when a certain delivery pressure of the pump, which can be adjusted by means of the springs 157, is exceeded, a short-circuit connection is established between the suction side 158 and the pressure side 159 by the plate 156 being lifted, thus limiting the delivery volume of the pump in a controllable manner.

An overload of the motor due to an impermissible increase of delivery pressure and a rapid discharge of the battery due to an excessive power consumption, e.g., when the motor is powered by a car battery, is prevented by this overload protection device. The pump 132 is accessible from the outside through a removable cover 177. The fittings 160 for the suction and pressure lines 161 and 162 of the pump 132 are recessed in conical bores 163, 164 in the housing 111 and are part of the pump housing.

The connecting hoses of the suction and pressure lines 161, 162 are pushed onto the fittings 160, which are provided with annular beads 165, burls or the like, and are hermetically sealed against the fittings by means of a retaining piece 178, which has a counter-cone corresponding to the bores 163, 164.

The blower 120 of the vacuum cleaner 119 located in the central part 112 of the housing 111 is rigidly connected to the output shaft 118 of the motor 114.

The electric motor 114, which can be operated by means of a changeover switch 179 attached to the handle 113, with a changeover control and a direct and alternating current connection, is arranged in the dust collection chamber 166 and is provided with a dust protection bag 167, which is fastened to a wire basket 168, with the wire basket 168 being supported on the motor 114 and on the insert wall 169 screwed to the housing 111.

The dust collection chamber 166 is formed by a conical attachment 170 which can be screwed to the insert wall 169 and which has an inserted intake fitting 173 provided with a flap valve 172 at its front end 171.

The suctioned air enters the dust collection chamber 166 in the direction of the arrow via the flap valve 172, from there it passes through the dust protection bag 167, the openings 174 arranged in the insert wall 169 and the suction fan 120, and exits to the outside through the air slots 175 in the housing 111.

To set the device down, it has rests 176 that can be inserted or screwed into the rear housing part 117.

[hw: 9]

Claims:

1. Multipurpose device, in particular a handheld vehicle care device, characterized in that the device (10, 110) comprises a motor-driven vacuum cleaner (19, 119), a connecting device of a tool drive (26, 126) that is connected or connectable to the drive (motor 14, 114) of the vacuum cleaner, e.g. for a polishing brush, and/or a water pump (32, 132) connected or connectable to the drive (motor 14, 114) of the vacuum cleaner (19, 119).

2. Multipurpose device according to claim 1, characterized in that the connecting shaft (27) for the tool drive (26) is connected to the shaft (18a) of the drive motor (14), in particular an electric motor, by a reduction gear (28) which can preferably be switched on and off.

3. Multipurpose device according to claim 1 or 2, characterized in that the connecting shaft (27) for the tool drive is arranged parallel or approximately parallel next to the removable suction nozzle (21) for the vacuum cleaner (19) on the housing (11) of the device (10).

4. Multipurpose device according to claim 1 to 3, characterized in that the suction fan (20) and the water pump (32) are arranged on opposite sides of

the drive motor (14), in particular directly on its shaft or its extensions (18a, 18b).

5. Multipurpose device according to claims 1 to 4, characterized in that the housing (11) of the device is approximately pistol-shaped in a manner known per se, with a central part (12) containing the electrical part with the electric motor (14) and a switch (15) and serving at the same time as a handle (13), a front part (16) with a dust bag (23), a suction nozzle (21) or a suction connection (22) and a tool connection (26), and a rear part (17) with a water pump (32).

6. Multipurpose device according to claims 1 to 5, characterized in that the dust bag (23) is detachably fastened to the suction connection (22) and can be removed with the latter from the housing (11) and in that - in particular for use of the device to drive a tool - the intake opening (25) for the suction connection (22) can be closed with a cover (51).

7. Multipurpose device according to claims 1 and 2, characterized in that the suction fan (120) is connected to the output shaft (118) of the motor (114) for entrainment in both directions of rotation and in that the connecting shaft (127) for the tool drive (126) and/or the drive shaft (180) for the water pump (132) are connected to the shaft (118) or its extension (118a) of the drive motor, in particular of a reversible electric motor, by a freewheel gear (153) operating in only one direction of rotation.

[hw: 11]

8. Multipurpose device according to claim 7, characterized in that the suction fan (120), the connecting shaft (127) for the tool drive (126) and/or the water pump (132) are arranged on the side of the electric motor (114) facing away from the dust collection chamber (166), namely the suction fan (120) in the central part (112), and the gearbox (152, 153), connecting shaft (127) for the tool drive (126) and/or the water pump (132) in the rear part (117) of the housing (111).

9. Multipurpose device according to claims 7 and 8, characterized in that the drive motor (114) is arranged in the dust collection chamber (166) and is shielded from the dust collection chamber by an air-permeable dust protection bag (167) and supported, for example, by means of a basket (168), in particular a wire basket.

10. Multipurpose device according to claims 1 to 9, characterized in that the electric motor has a connection for a direct and alternating current and is designed in particular for battery operation.

11. Multipurpose device according to claim 1 to 10, characterized in that the dust collection chamber (166) is formed by a conical attachment (170) which can be screwed to the housing (111), e.g., an insert wall (169) thereof, and which has at its front end (171) an inserted intake fitting (173) preferably provided with a flap valve (172).

[hw: 12]

12. Multipurpose device according to claims 1 to 11, characterized in that the water pump arranged in the rear part (17) of the housing (11) of the device (10) is separated from the rest of the housing (11) in a watertight manner by a wall (33) and that the pump housing (36) can be removed from the main housing (11) or the pump chamber (156) can be accessed from the outside through a removable cover (177).

13. Multipurpose device according to claims 1 to 12, characterized in that the water pump (32 or 132) connected, for example, to the rear output shaft (18b) of the electric motor (14) or to the freewheel gear (153), e.g. for operating a washing brush, a spray hose, a camping shower, or the like, is designed as a rotary pump, for example as a centrifugal or screw pump, but in particular as a self-priming gear pump.

14. Multipurpose device according to claim 13, characterized in that the water pump designed as a gear pump is provided with a relief device connecting the suction and pressure sides thereof.

15. Multipurpose device according to claim 14, characterized in that a side wall (154) of the pump chamber (155) is formed by a spring-loaded (157), liftable plate (156).

[hw: 13]

16. Multipurpose device according to claims 12 to 15, characterized in that the fittings (160) for the suction and pressure lines (161, 162) are mounted in conical bores (163, 164) in a recessed manner in the housing (111) of the device forming part of the pump housing, and the preferably elastic lines (161, 162), e.g. plastic hoses, which are pushed onto the fittings (160), are sealed against the fittings (160) by means of conical retaining pieces (178) which are applied to the lines and cooperate with the bores (163, 164).

17. Multipurpose device according to claims 1 to 16, characterized by rests (176) which can be screwed or inserted into the rear housing part (117).

18. Multipurpose device according to claims 1 to 17, characterized by a suspension handle (39) on the upper side (38) of the housing (11), by means of which the device (10) can be suspended upright in a container with liquid and which, for example, simultaneously serves to determine the level of the liquid level.

19. Multipurpose device according to claim 18, characterized in that the air slots (24) are arranged in front of the bearing surface (40) of the suspension handle (39) on the circumference of the housing (11), so that they are located above the edge (43) of the container when the device is suspended in a liquid container (42).

20. Multipurpose device according to claims 1 to 19, characterized in that the housing of the same is made from plastic.

E m p t y P a g e

[hw: 14]

63 c - 91 - Filing date: March 2, 1968 Publication date: December 23, 1972

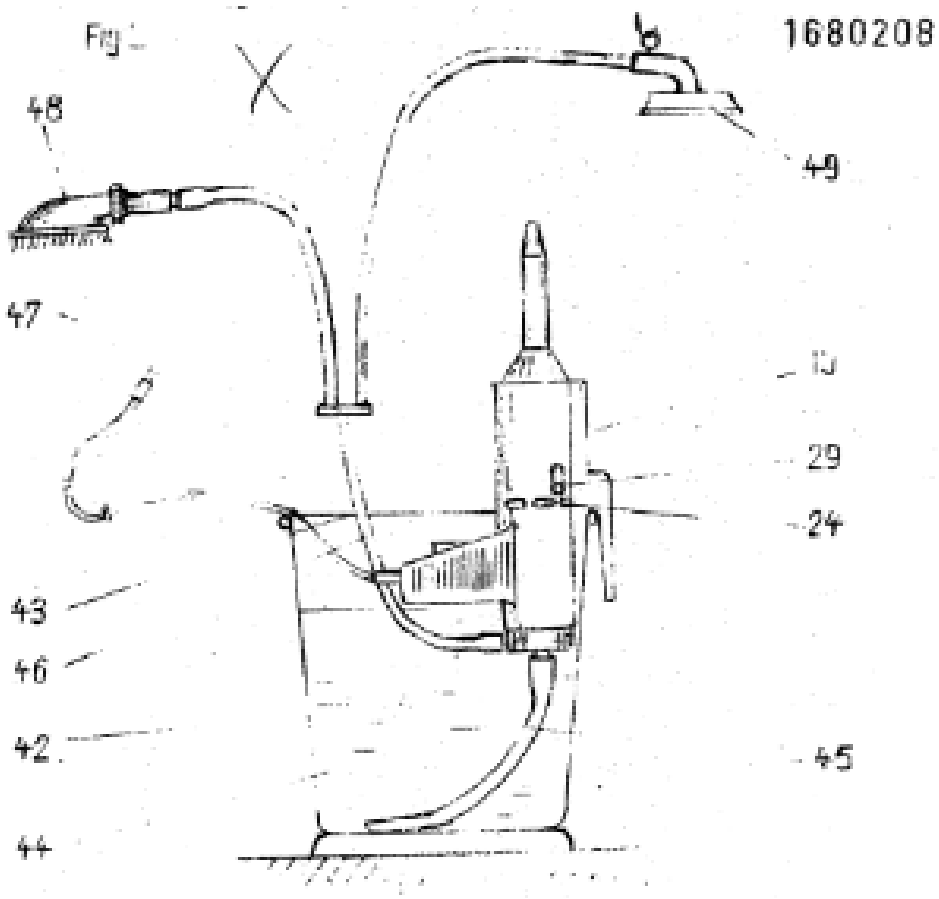

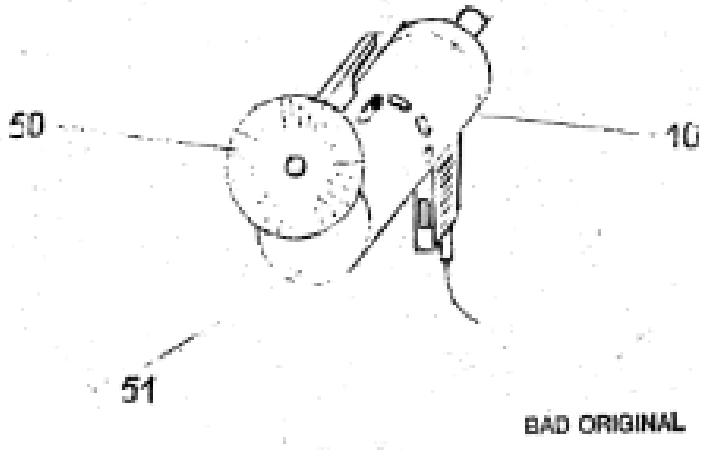

BAD ORIGINAL

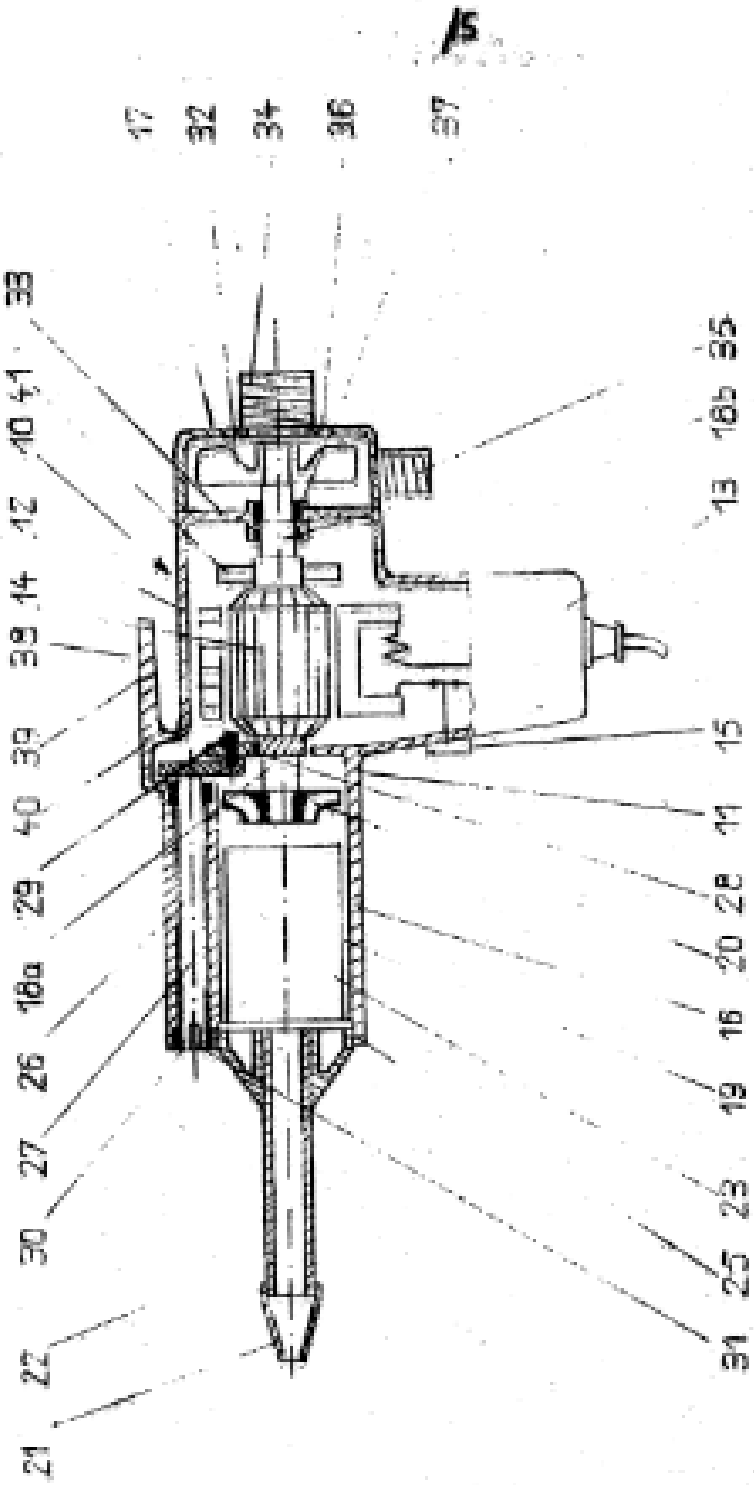
17
32
34
36
37
33
41
10
12
14
39
39
40
29
18a
26
27
30
22
21
35
18b
13
15
11
28
20
16
19
23
25
31

Fig.1

1680208

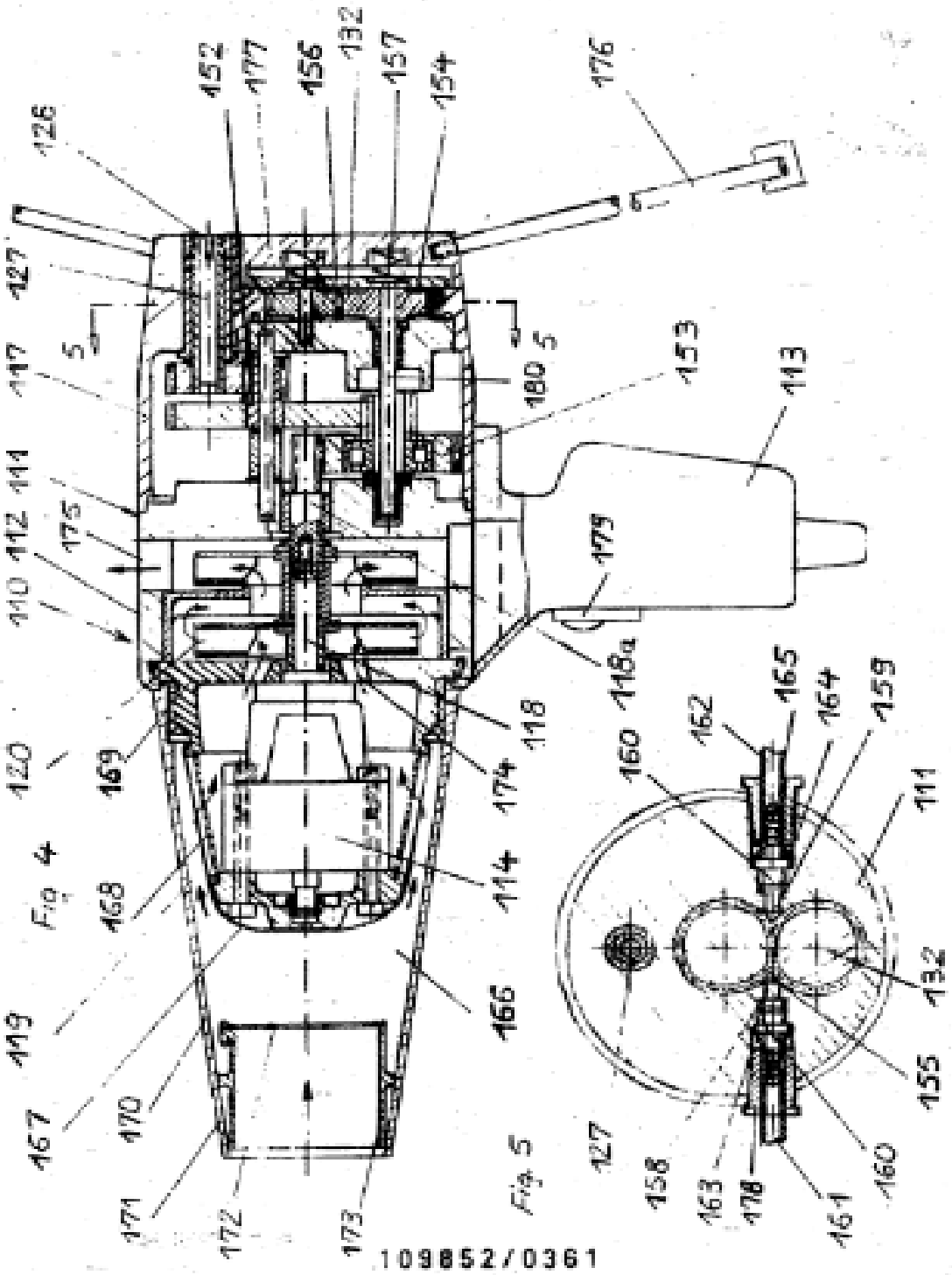

109852/0361

TRANSLATION CERTIFICATION

Date: June 12, 2024

To whom it may concern:

This is to certify that the attached translation is an accurate representation of the documents received by this office. The translation was completed from:

- German (Germany)

To:

- English (USA)

The documents are designated as:

- DE1680208A1

Emily Paras, Project Manager in this company, attests to the following:

"To the best of my knowledge, the aforementioned documents are a true, full and accurate translation of the specified documents."

Signature of Emily Paras