US 20070209335A1

(19) United States

(12) Patent Application Publication

(10) Pub. No.: US 2007/0209335 A1

(43) Pub. Date: Sep. 13, 2007

Conrad

(54) VACUUM CLEANER WITH A MOVEABLE DIVIDER PLATE

(75) Inventor: **Wayne Ernest Conrad**, Hampton (CA)

Correspondence Address:
BERESKIN AND PARR
40 KING STREET WEST
BOX 401
TORONTO, ON M5H 3Y2 (CA)

(73) Assignee: **GBD CORP.**, Nassau (BS)

(21) Appl. No.: **11/683,670**

(22) Filed: **Mar. 8, 2007**

Related U.S. Application Data

(60) Provisional application No. 60/780,824, filed on Mar. 10, 2006.

Publication Classification

(51) **Int. Cl.**
B01D 50/00 (2006.01)

(52) **U.S. Cl.** **55/337**; 55/345; 55/428

(57) **ABSTRACT**

A surface cleaning apparatus comprises a dirt inlet, a handle, a cyclone separator having an outer wall, a fluid inlet downstream from the dirt air inlet and a fluid outlet, a plate having a cyclone chamber surface and positioned to substantially divide the cyclone separator into a cyclone chamber and a dirt collection chamber, the plate being removably mounted in the cyclone separator, a passage extending between the cyclone chamber and the dirt collection chamber and a fluid flow motor.

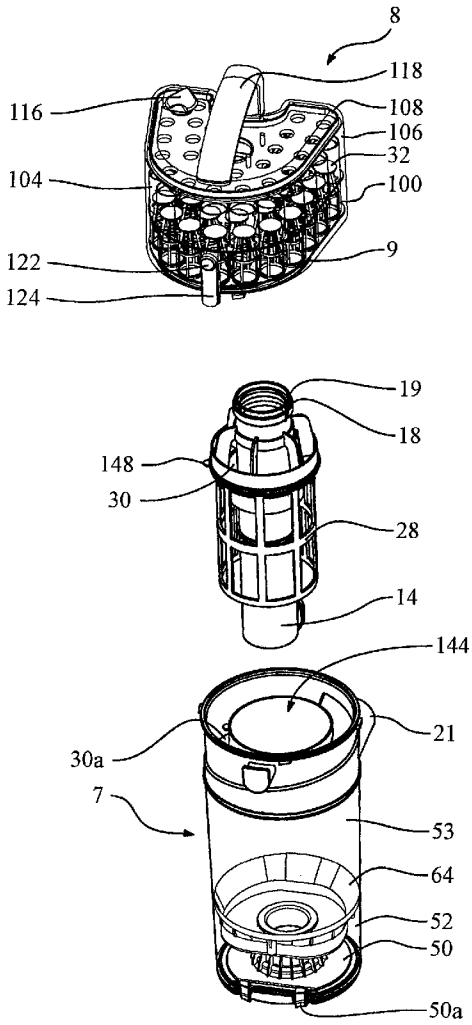

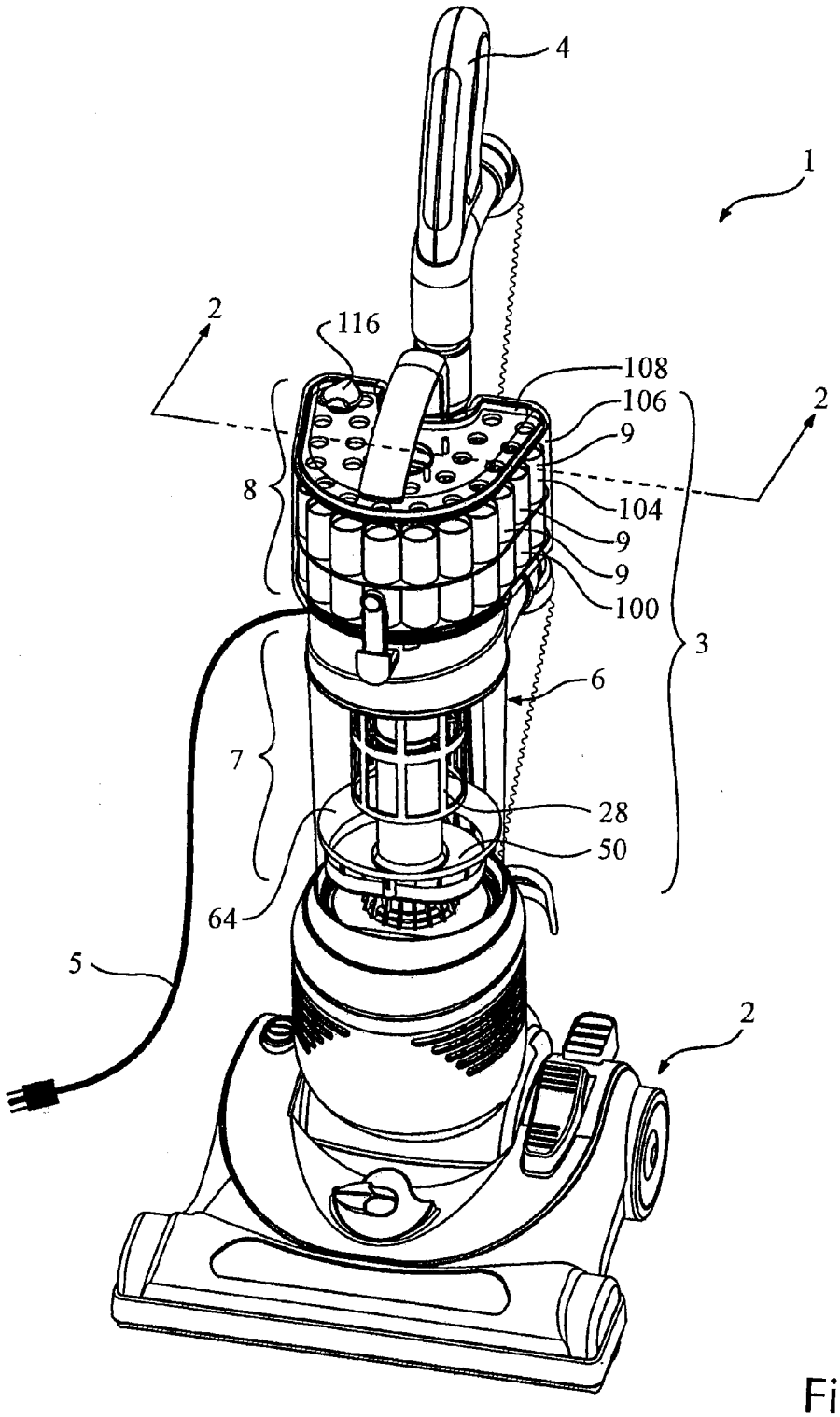

Fig. 1

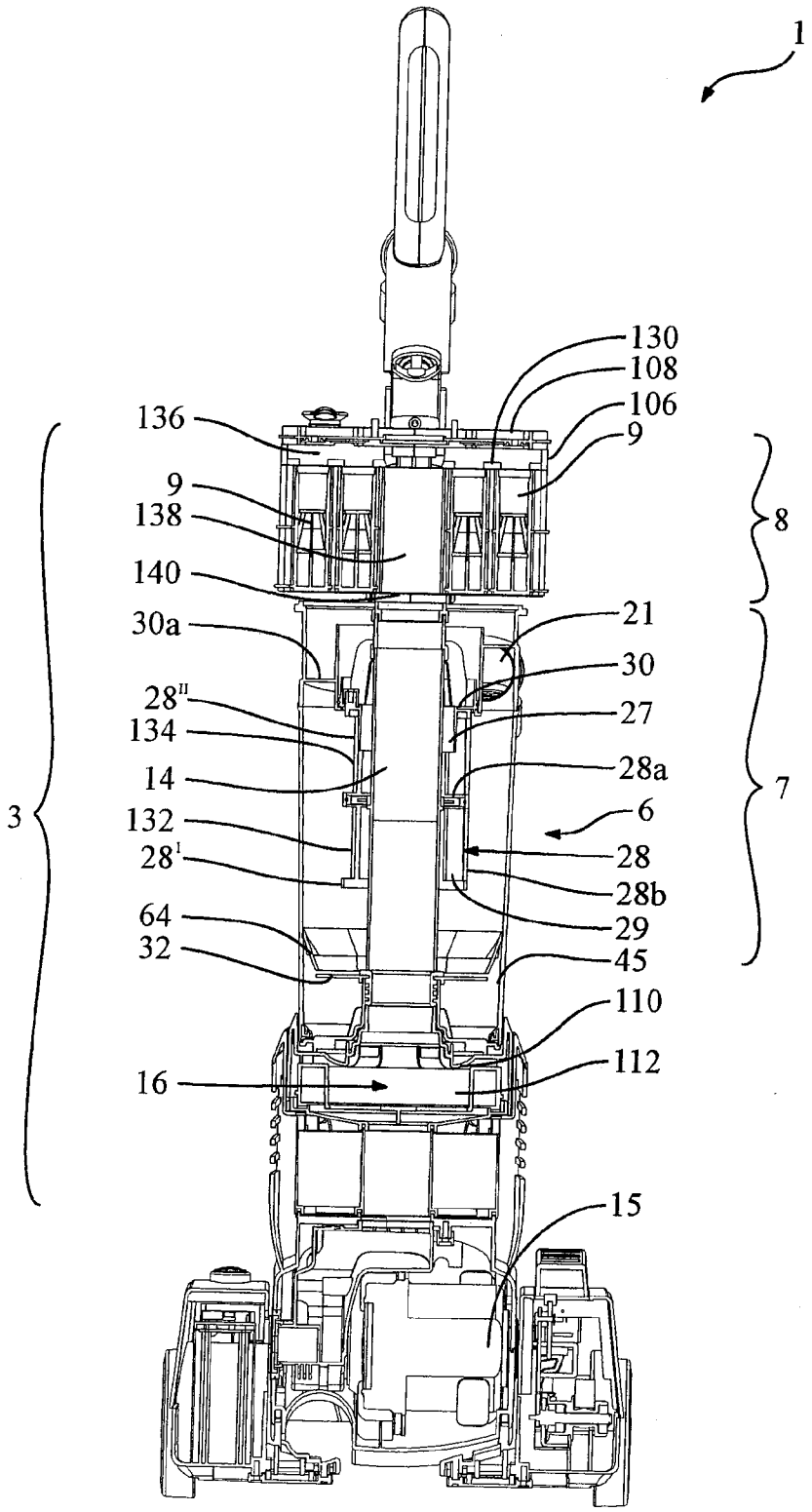
1
130
108
106
9
136
9
138
140
8
30a
21
30
28II
27
134
14
28a
7
3
132
6
28I
28
28b
64
29
32
45
110
16
112
15

Fig. 2

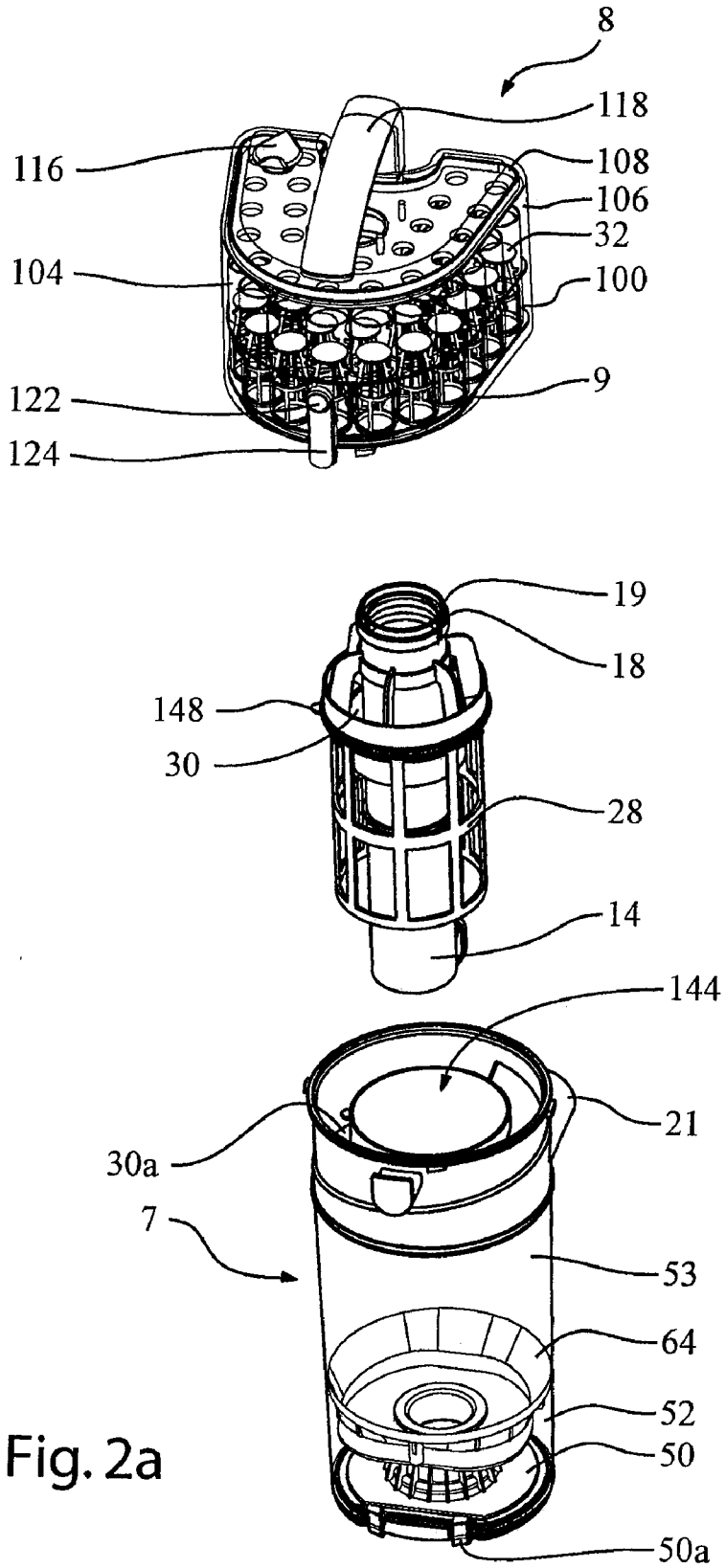
8
118
116
108
106
32
104
100
9
122
124
19
18
148
30
28
14
144
21
30a
7
53
64
52
50
50a

Fig. 2a

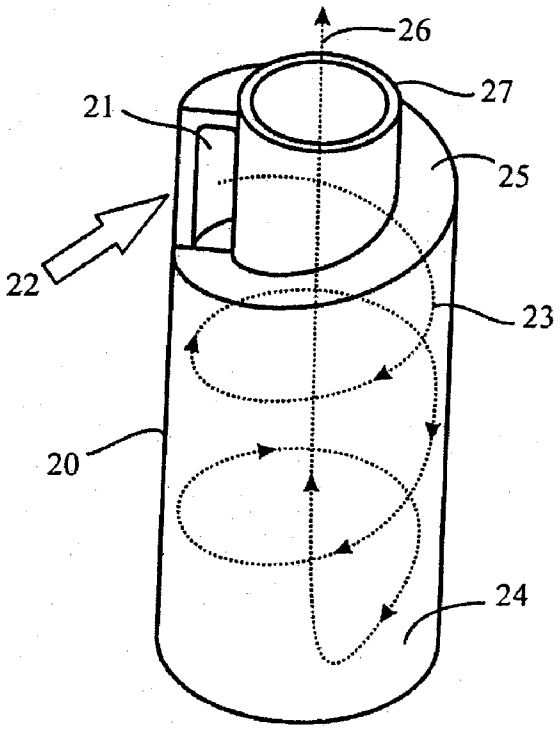

Fig. 3

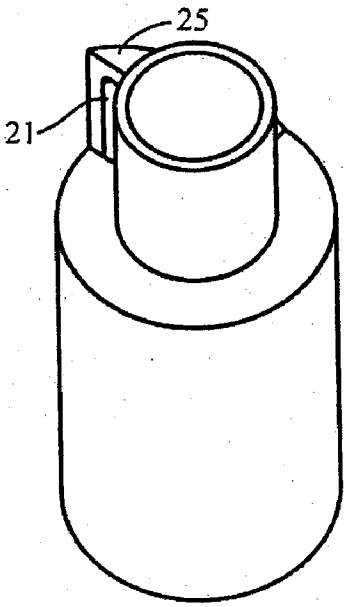

Fig. 3a

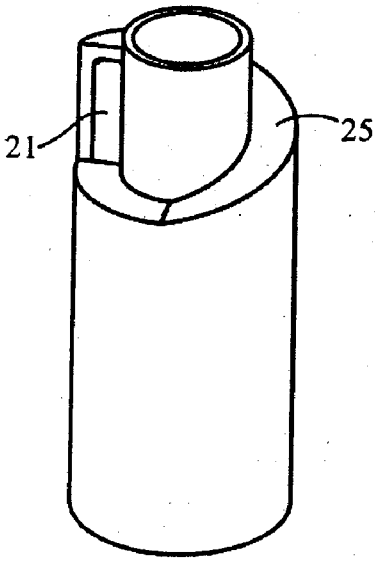

Fig. 3b

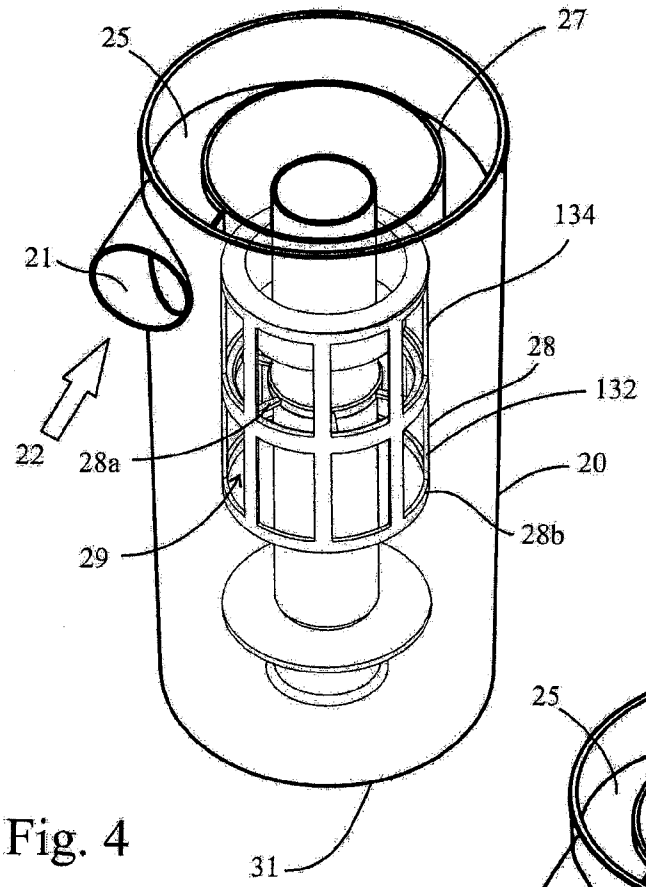

Fig. 4

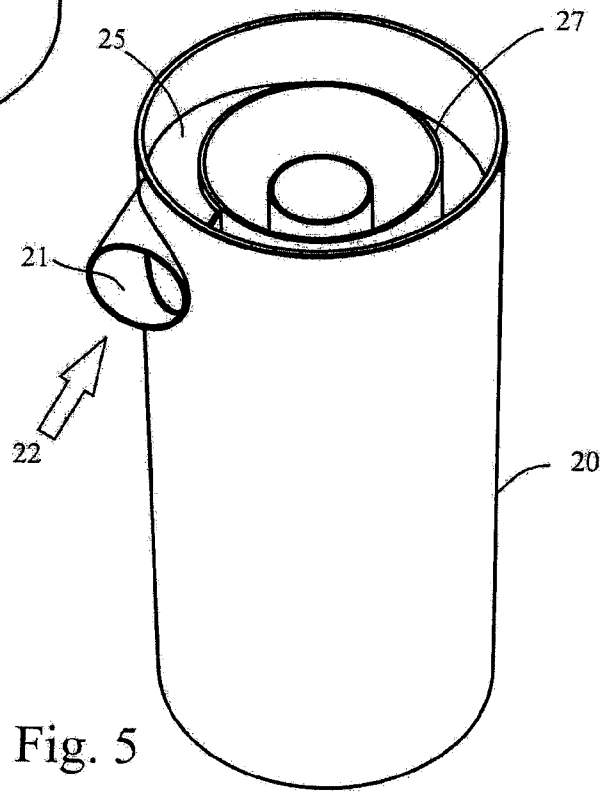

Fig. 5

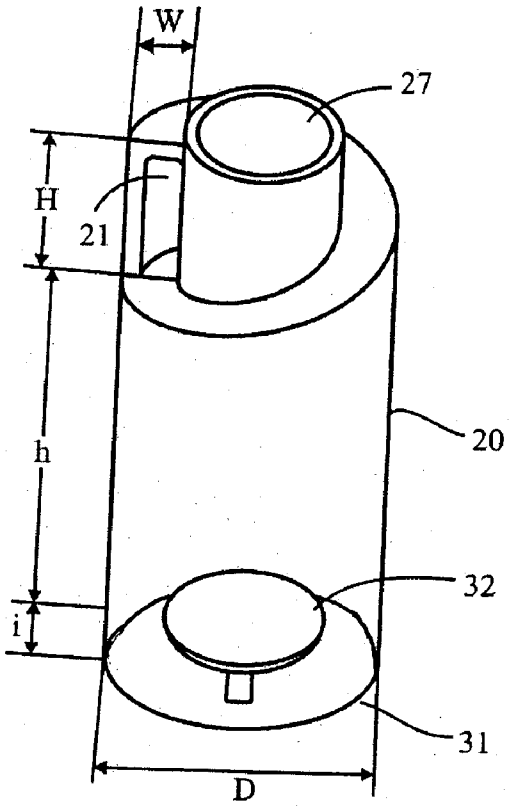

Fig. 6

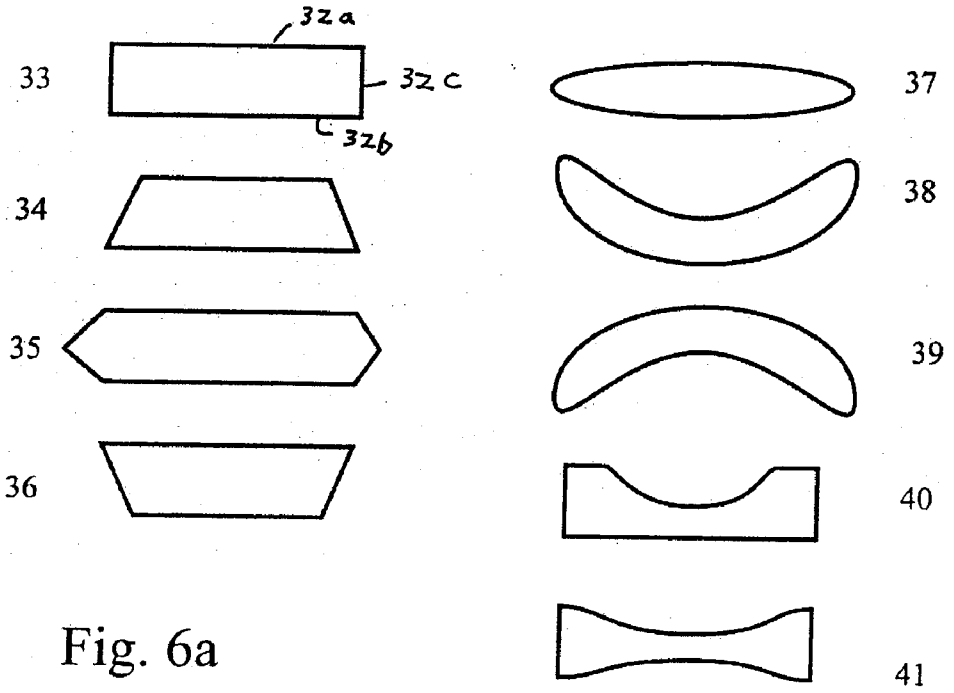

Fig. 6a

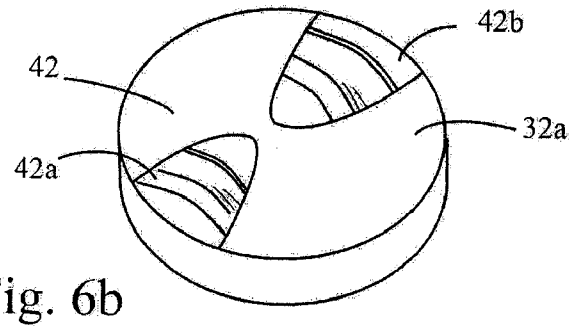

Fig. 6b

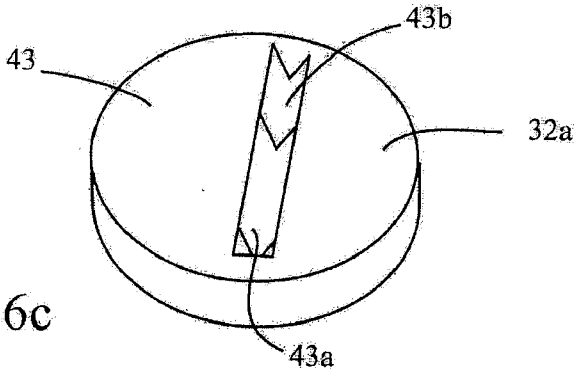

Fig. 6c

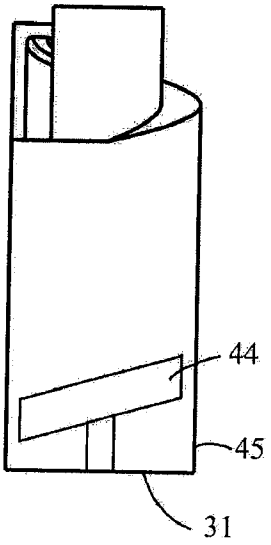

Fig. 6d

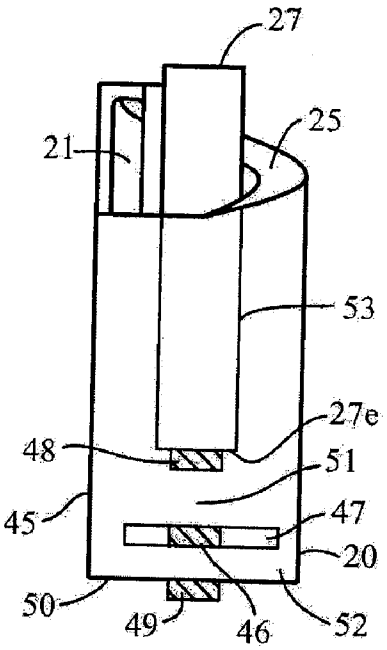

Fig. 6e

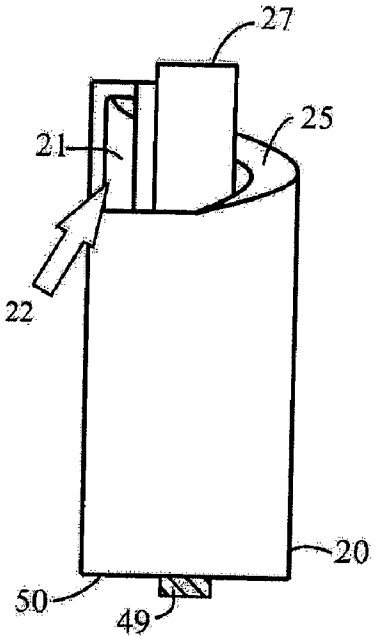

Fig. 6f

Fig.6g

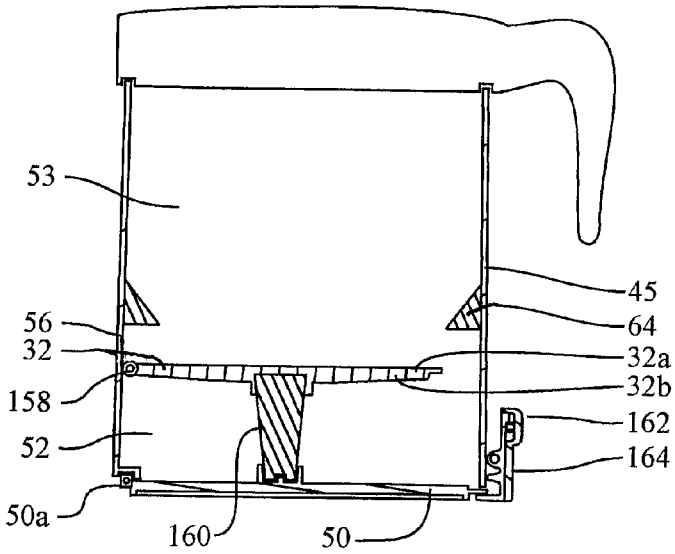
53
45
56
64
32
32a
158
32b
162
52
164
50a
160
50

Fig. 6h

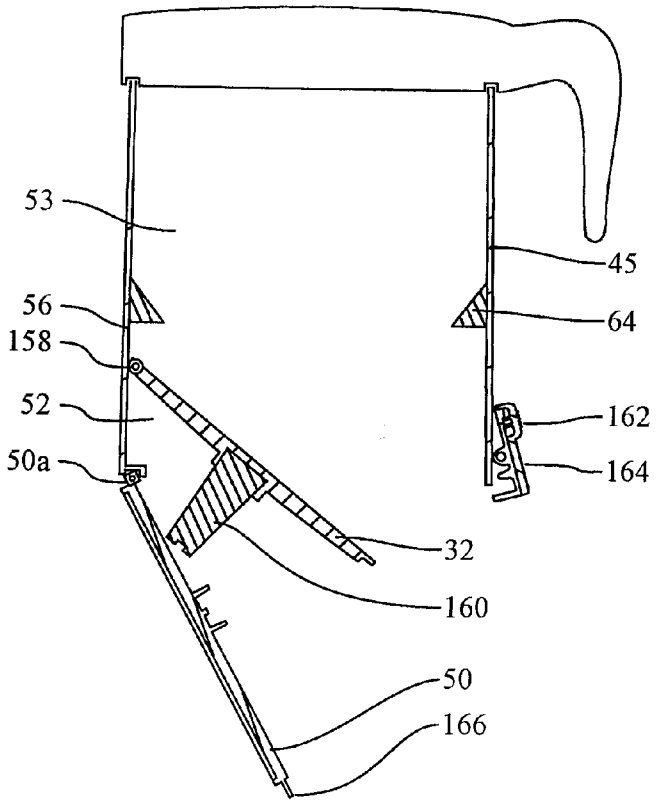
53
45
56
64
158
52
162
50a
164
32
160
50
166

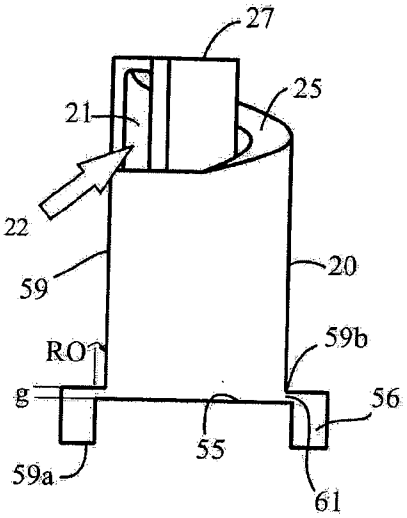

Fig. 7

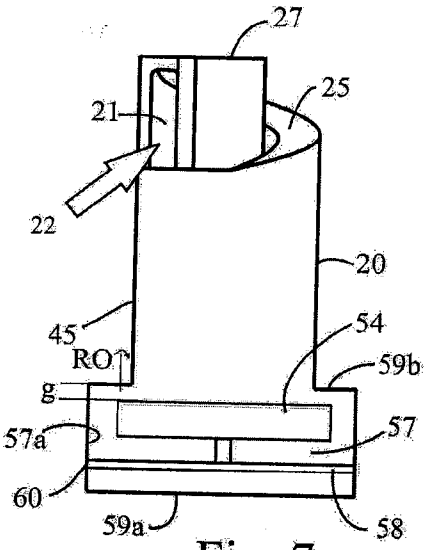

Fig. 7a

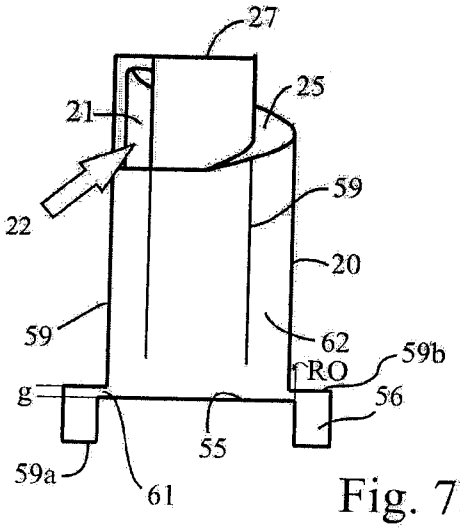

Fig. 7b

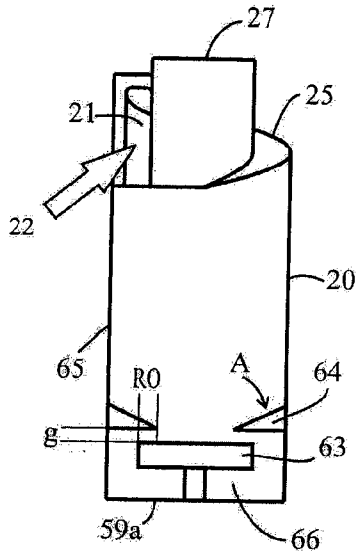
27
25
21
22
20
65
R0
A
64
g
63
59a
66

Fig. 7c

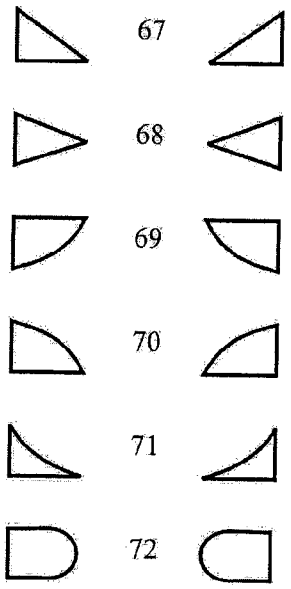
67
68
69
70
71
72

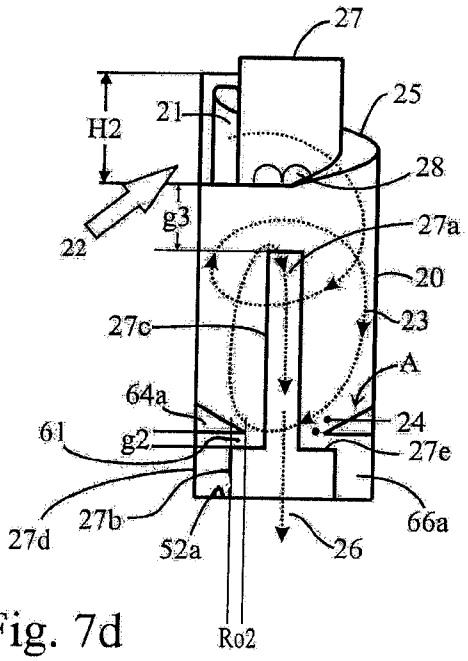
27
H2
21
25
28
22
g3
27a
20
27c
23
A
64a
24
61
g2
27e
27d
27b
52a
26
66a
Ro2

Fig. 7d

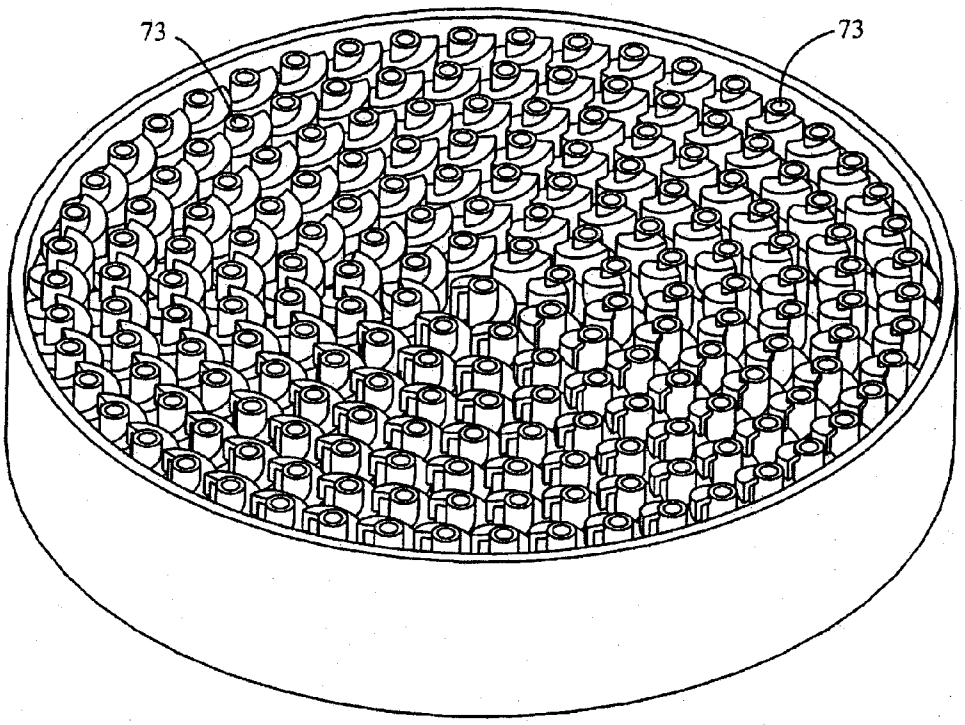

Fig. 8

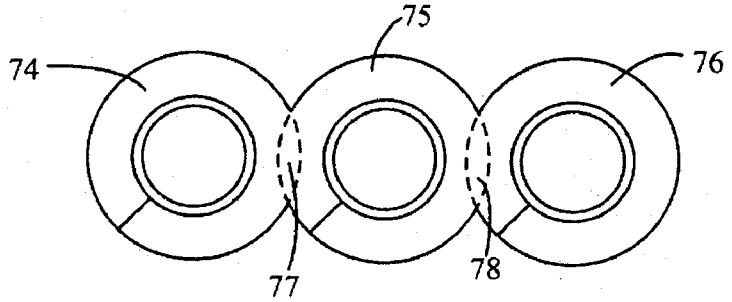

Fig. 8a

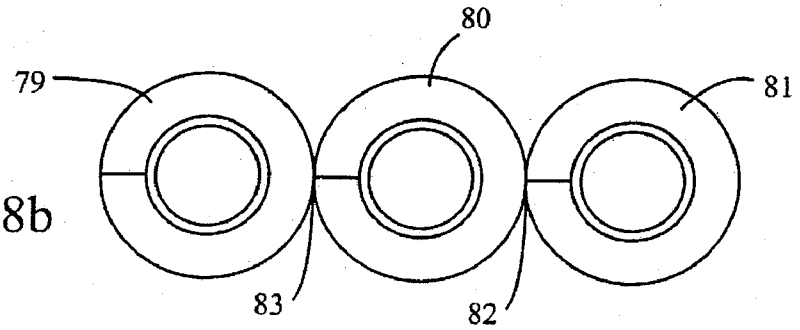

Fig. 8b

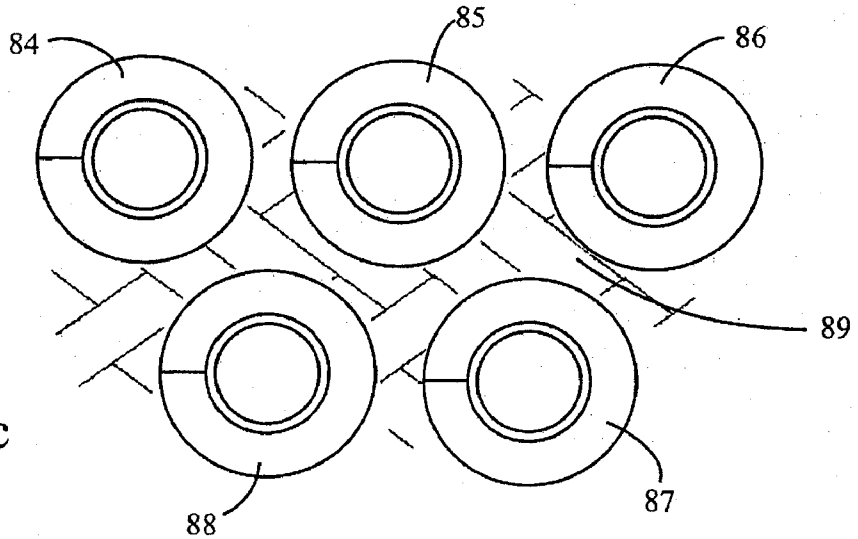

Fig. 8c

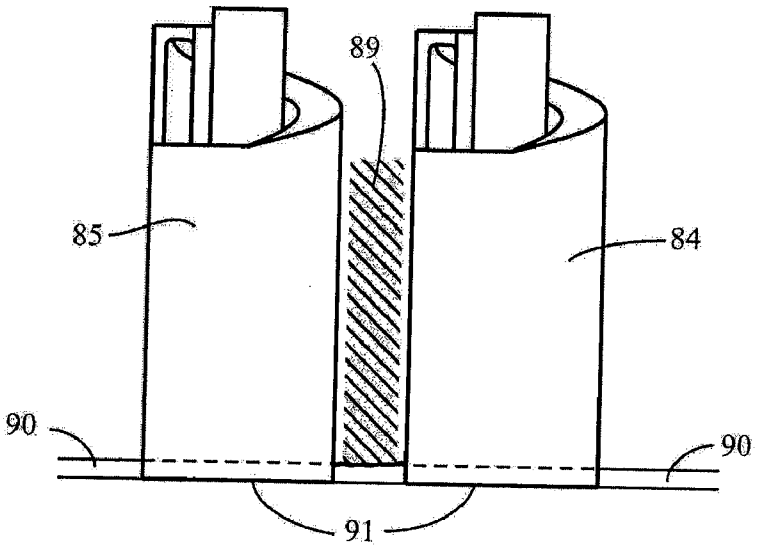

Fig. 8d

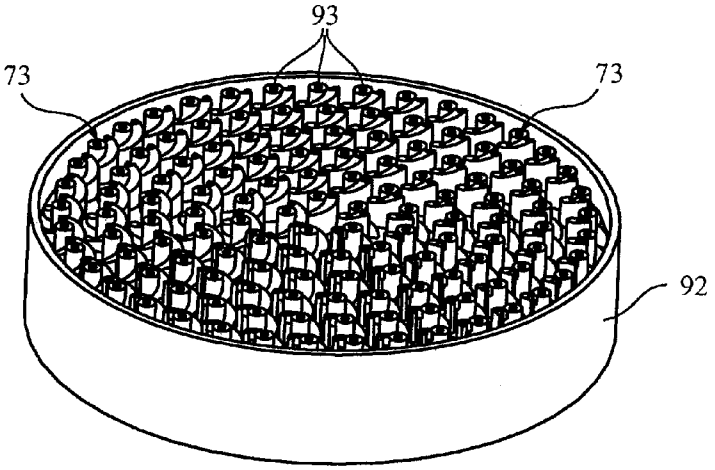

Fig. 9a

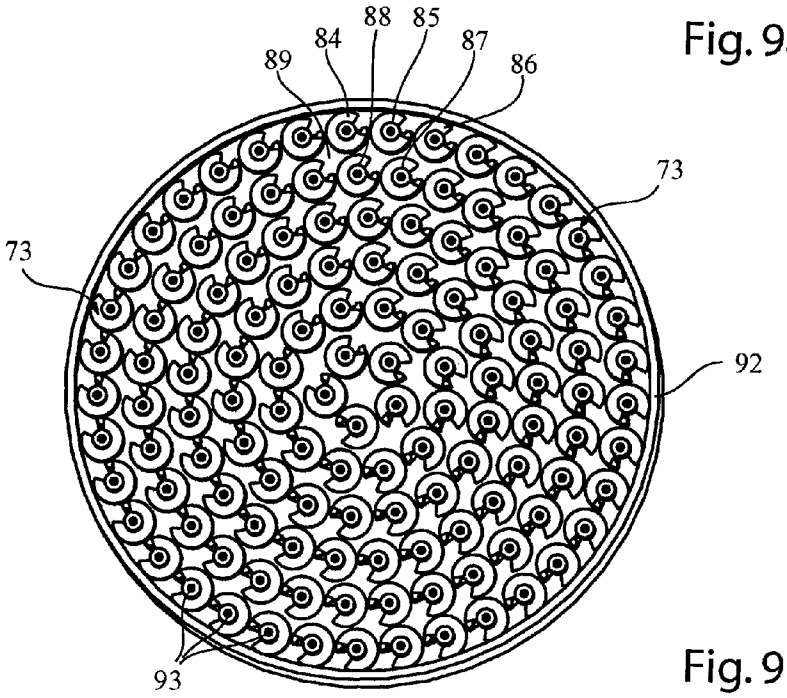

Fig. 9

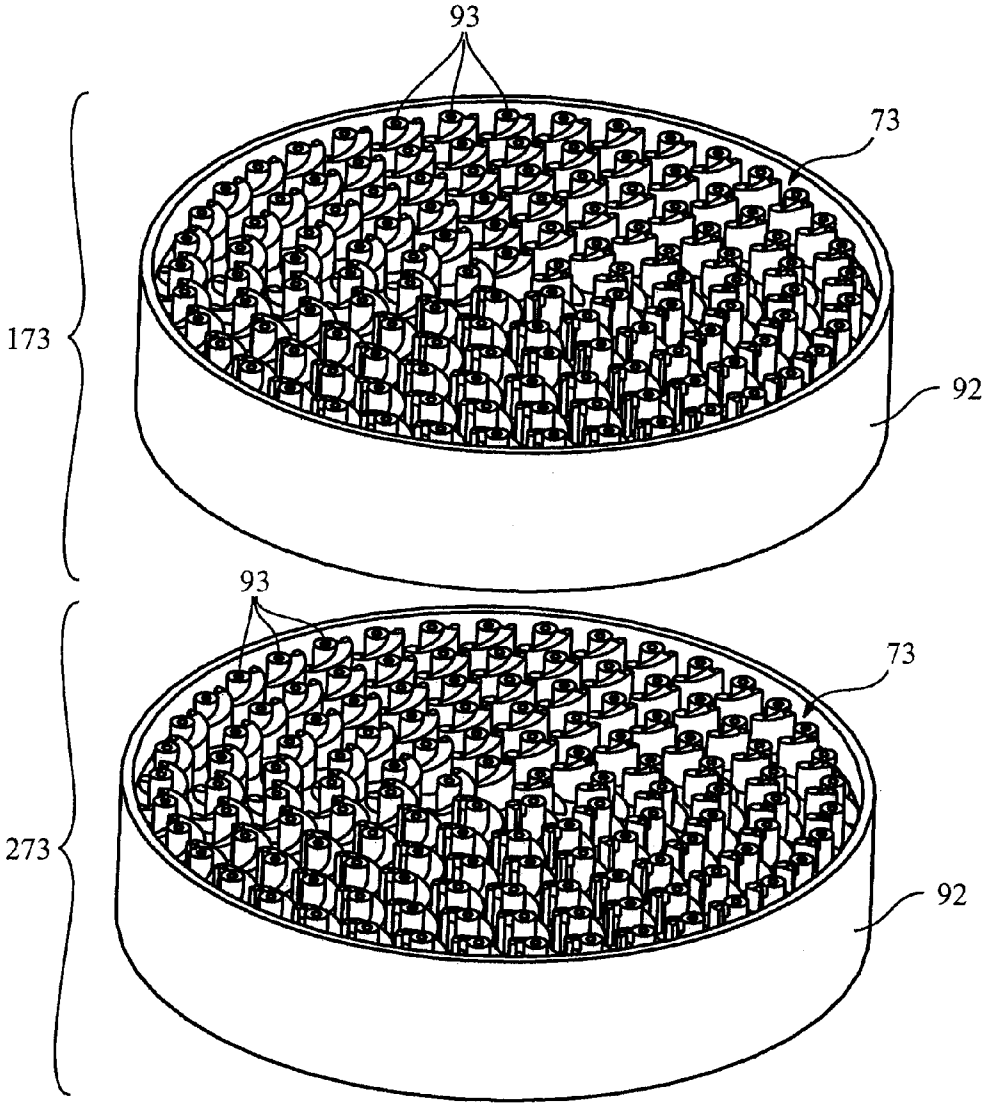

Fig. 10

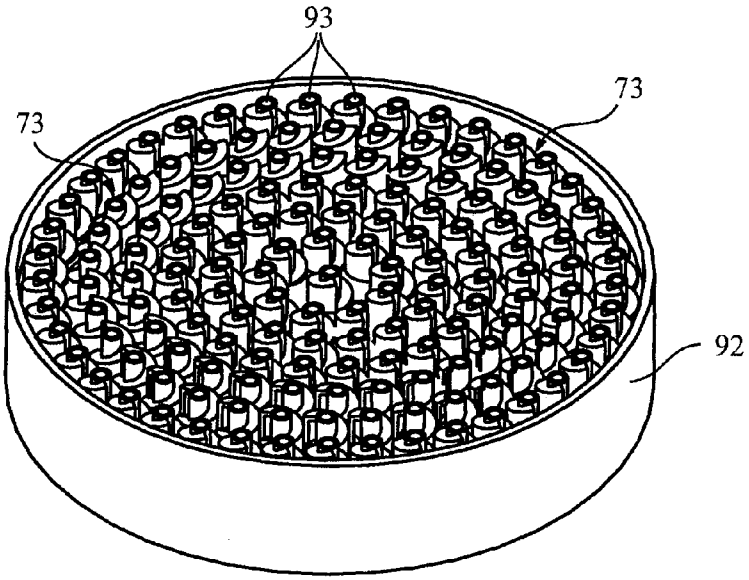

Fig. 11a

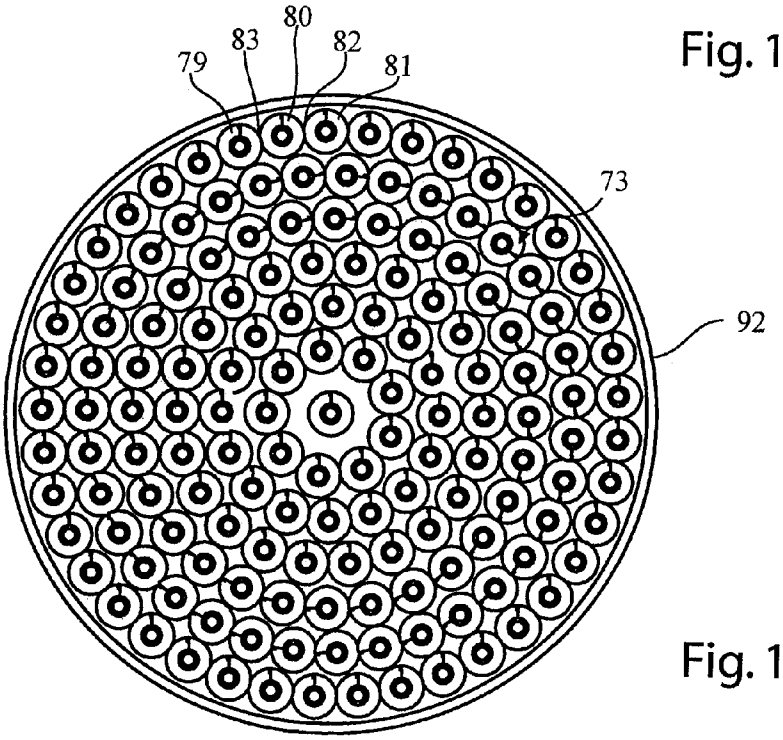

Fig. 11

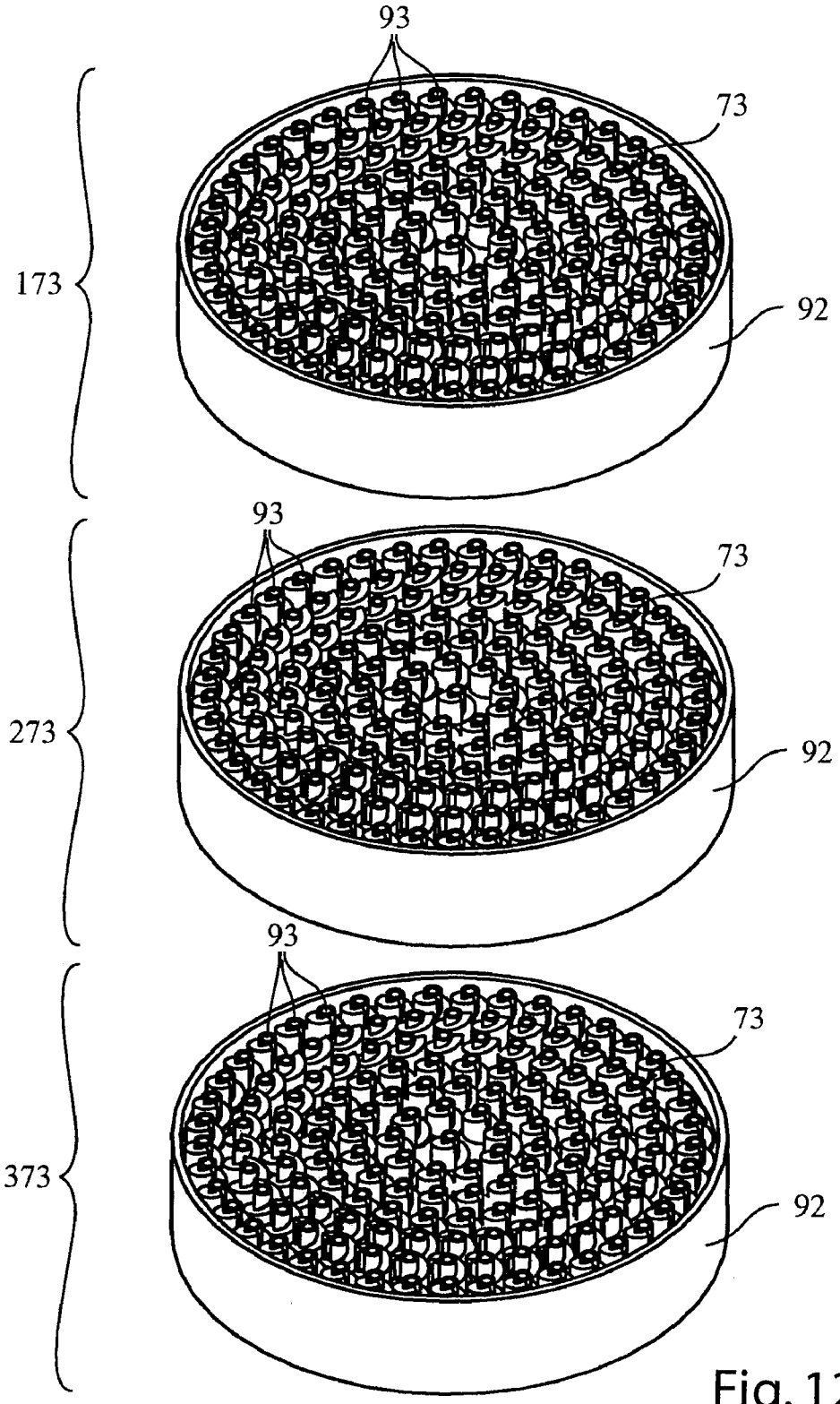

Fig. 12

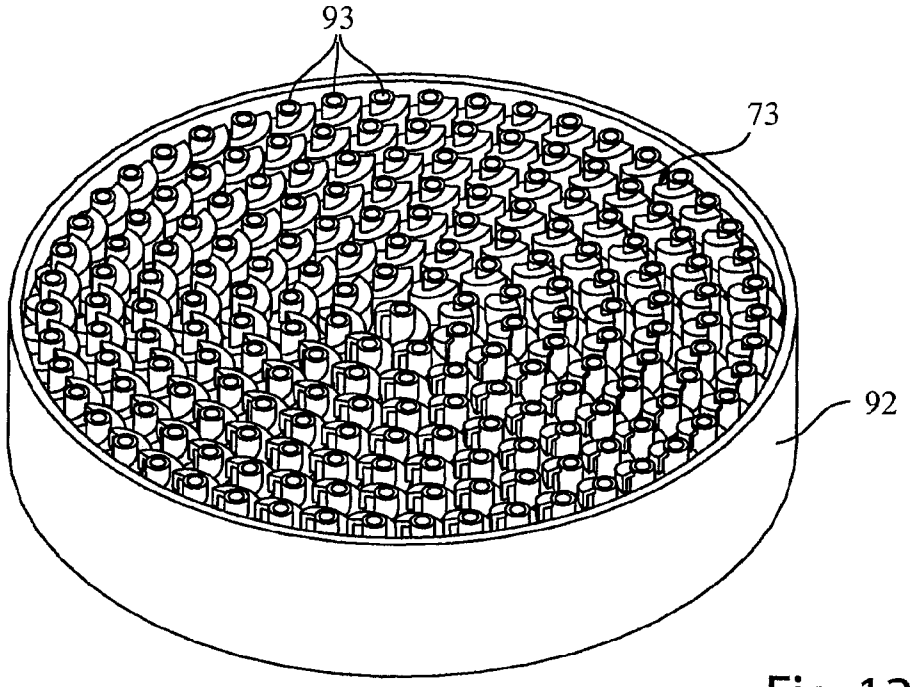

Fig. 13a

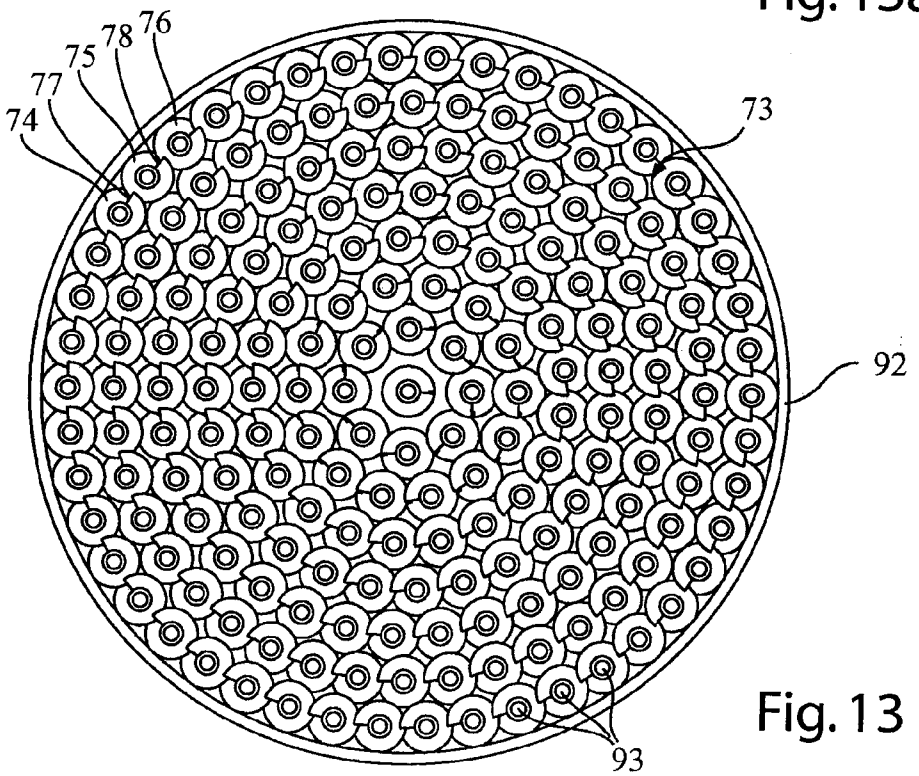

Fig. 13

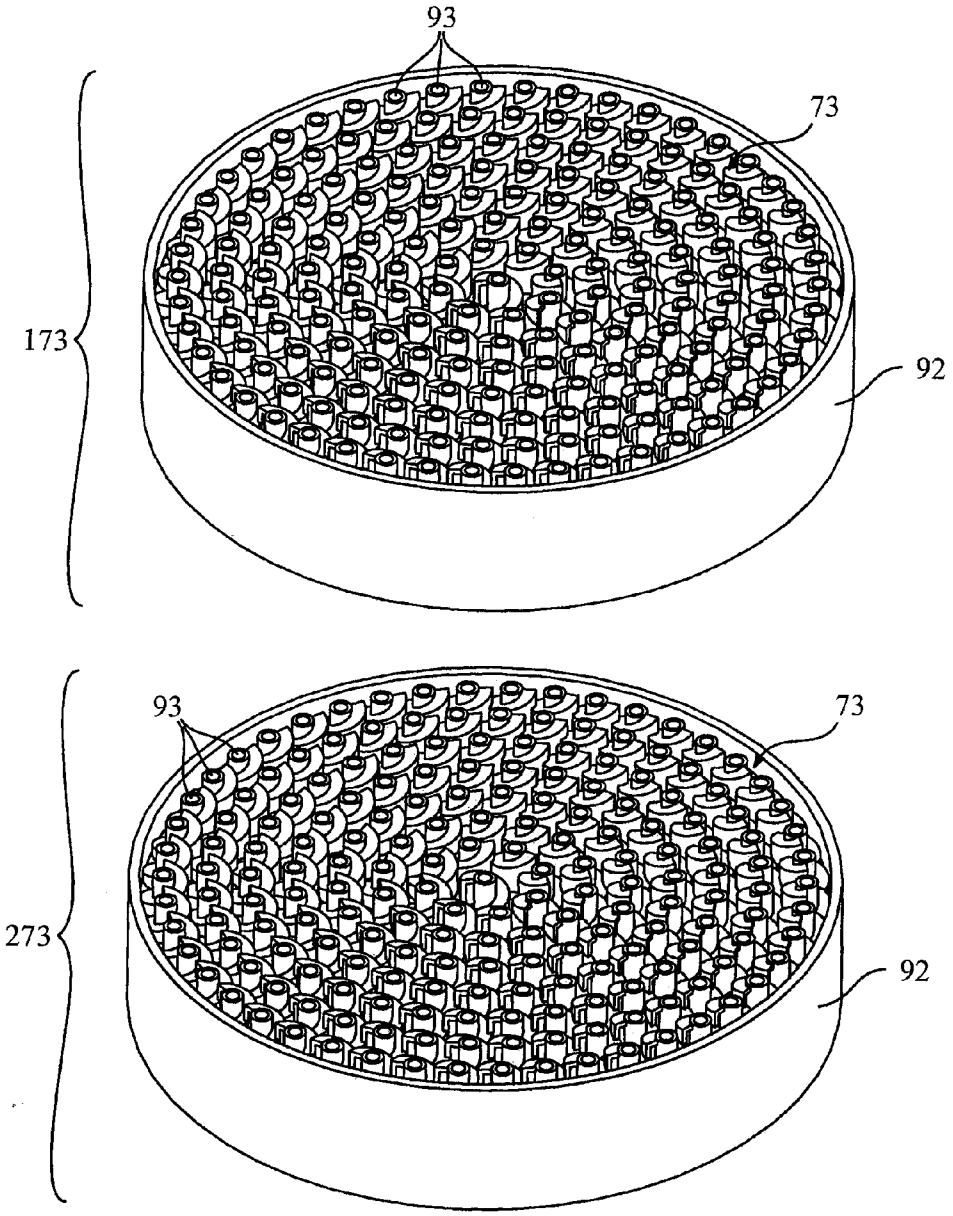

Fig. 14

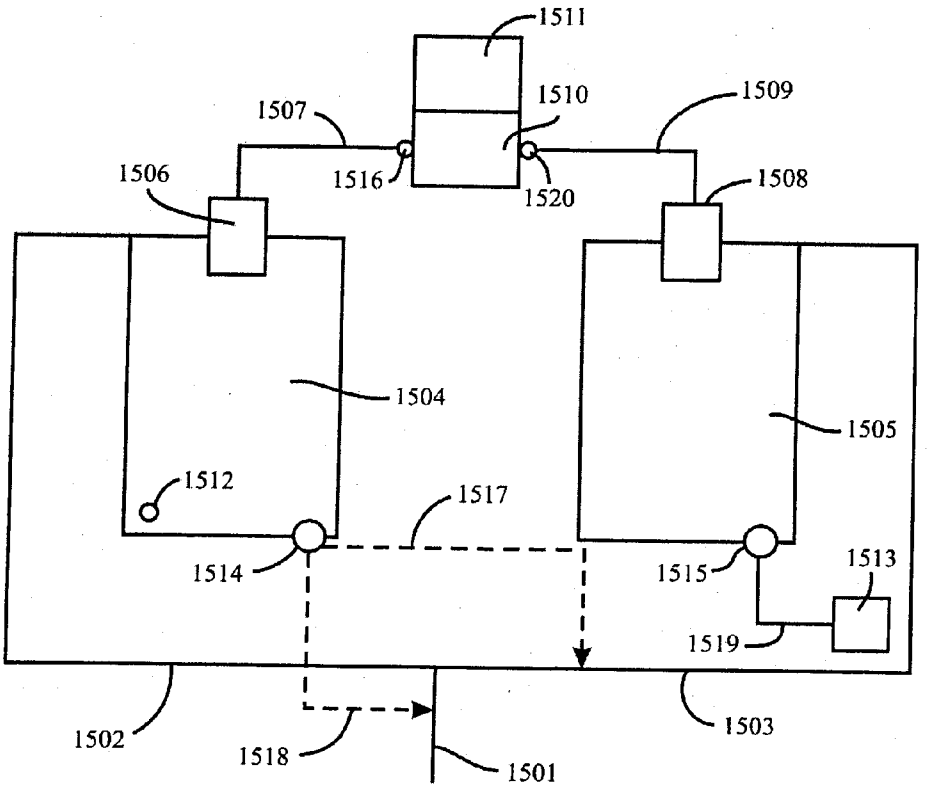
1511
1510
1509
1507
1506
1516
1520
1508
1504
1505
1512
1517
1514
1515
1513
1519
1502
1518
1501
1503

Fig. 15

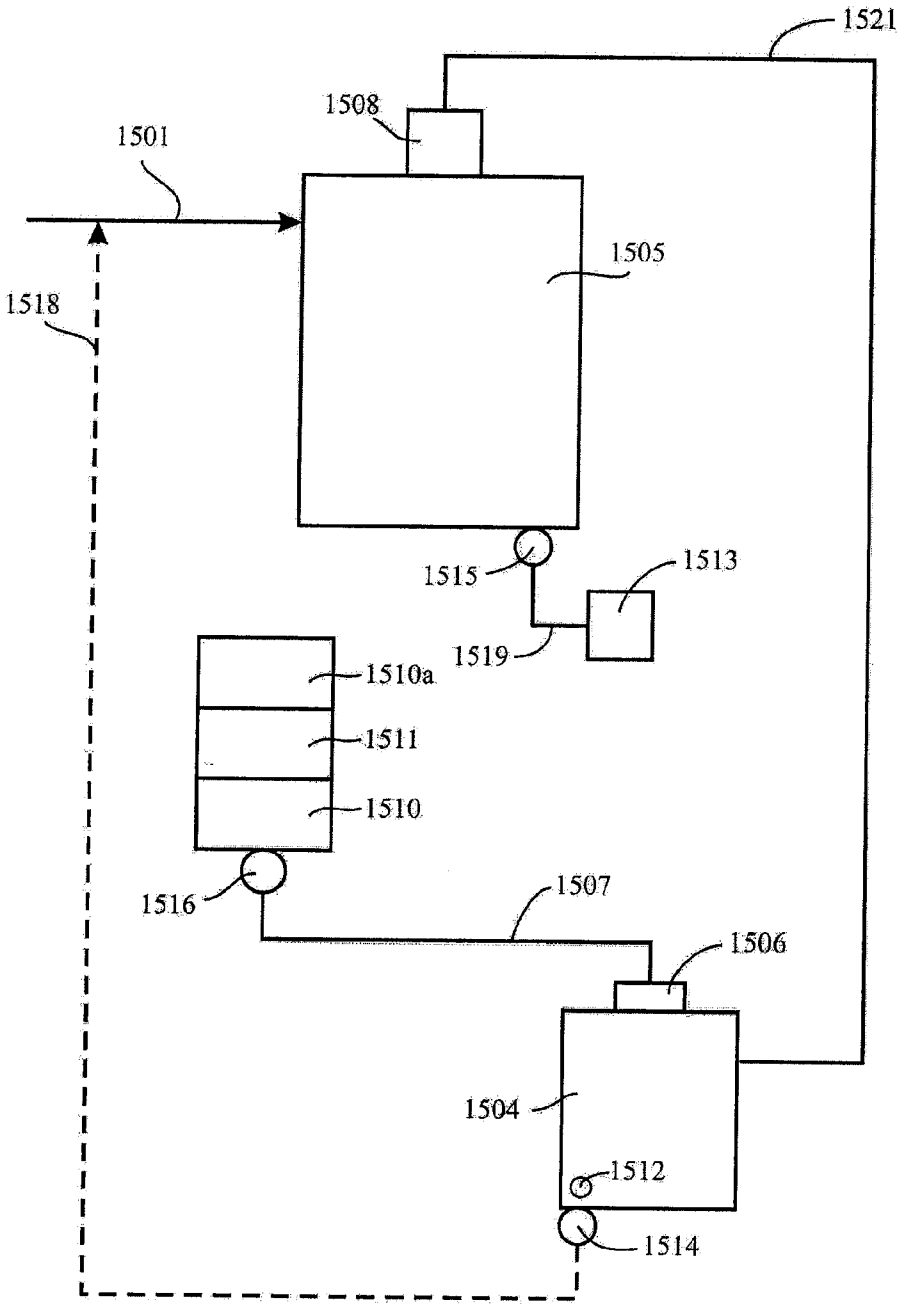
1521
1508
1501
1505
1518
1515
1513
1519
1510a
1511
1510
1516
1507
1506
1504
1512
1514

Fig. 15a

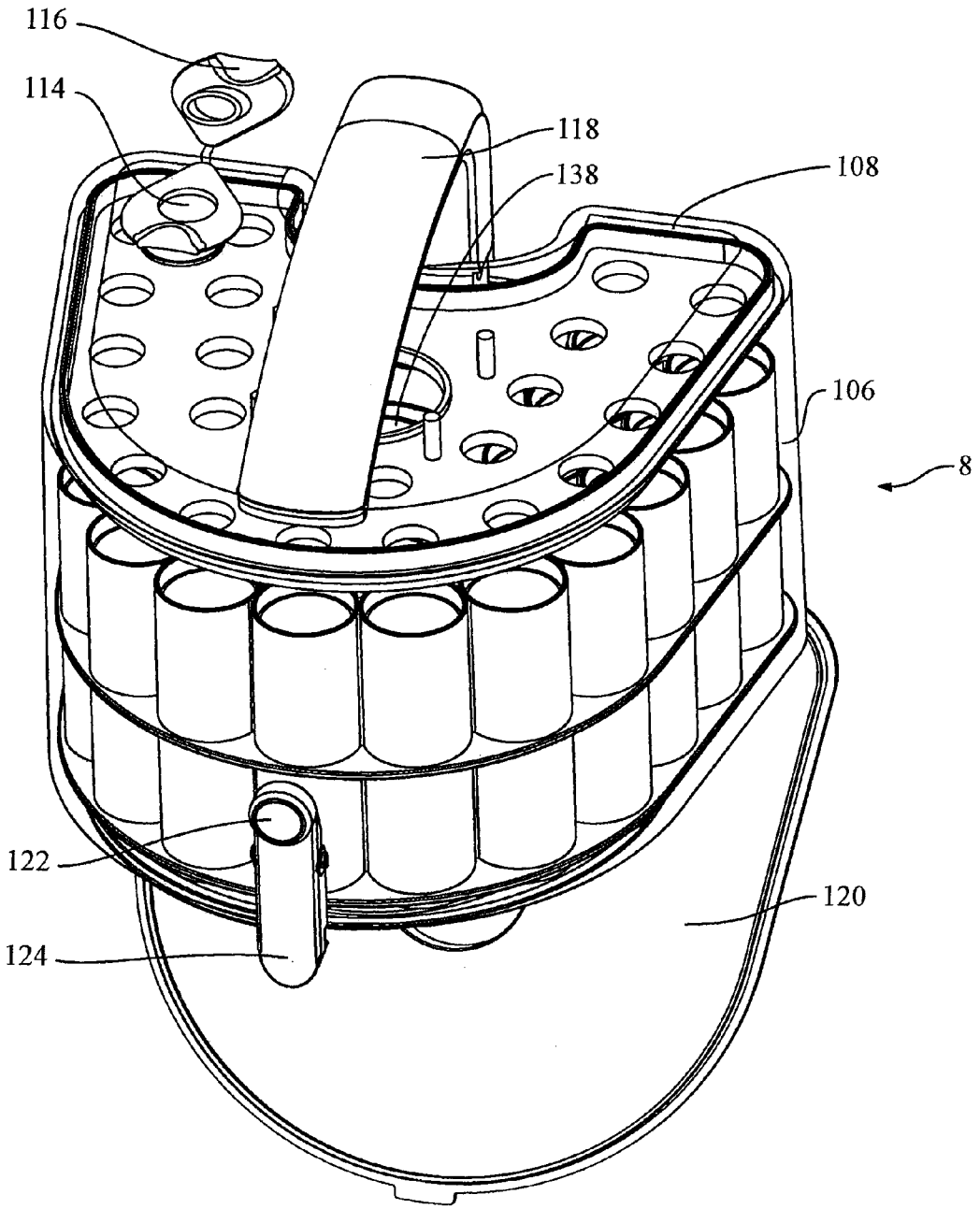

Fig. 16

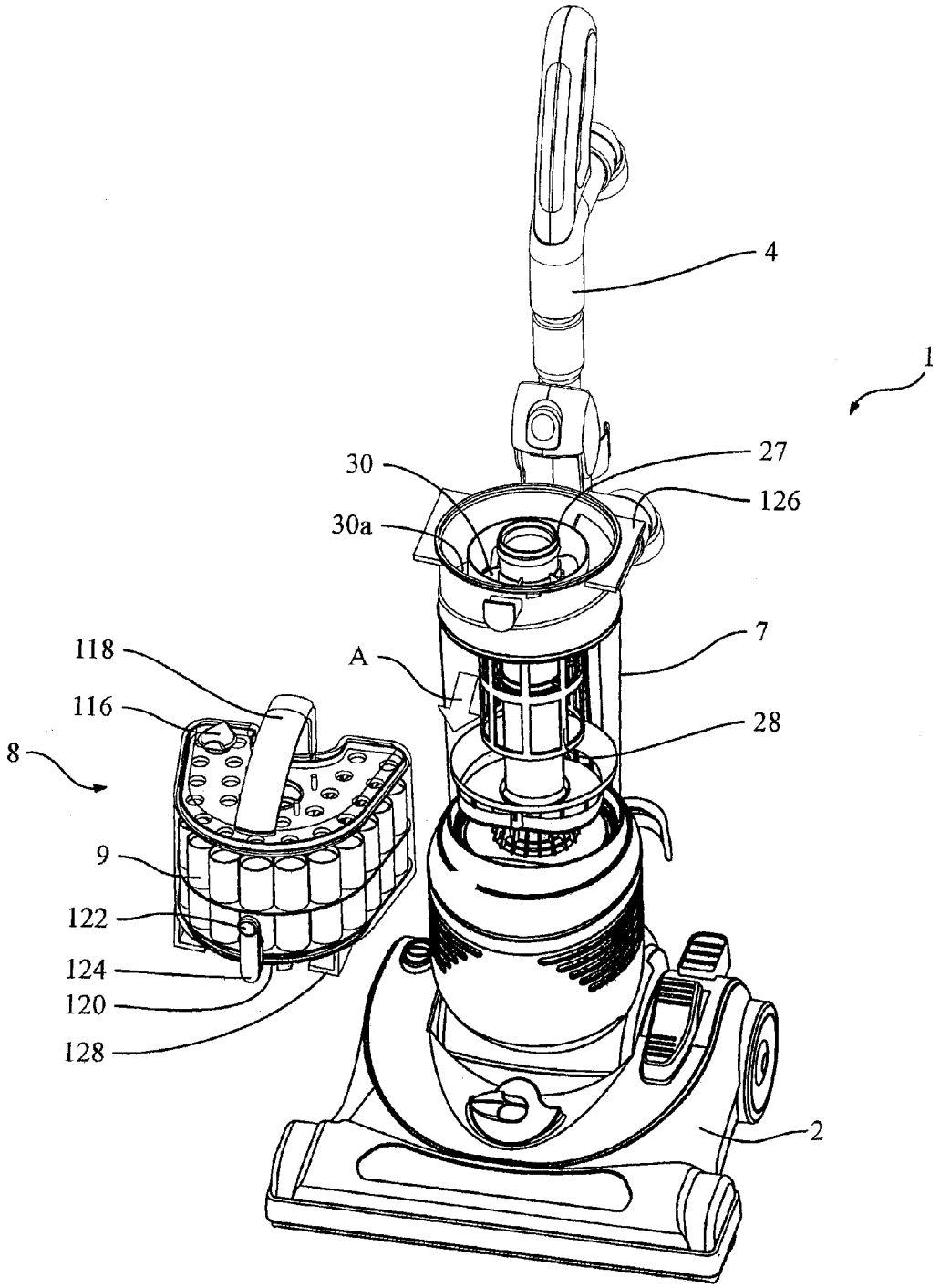

Fig 17

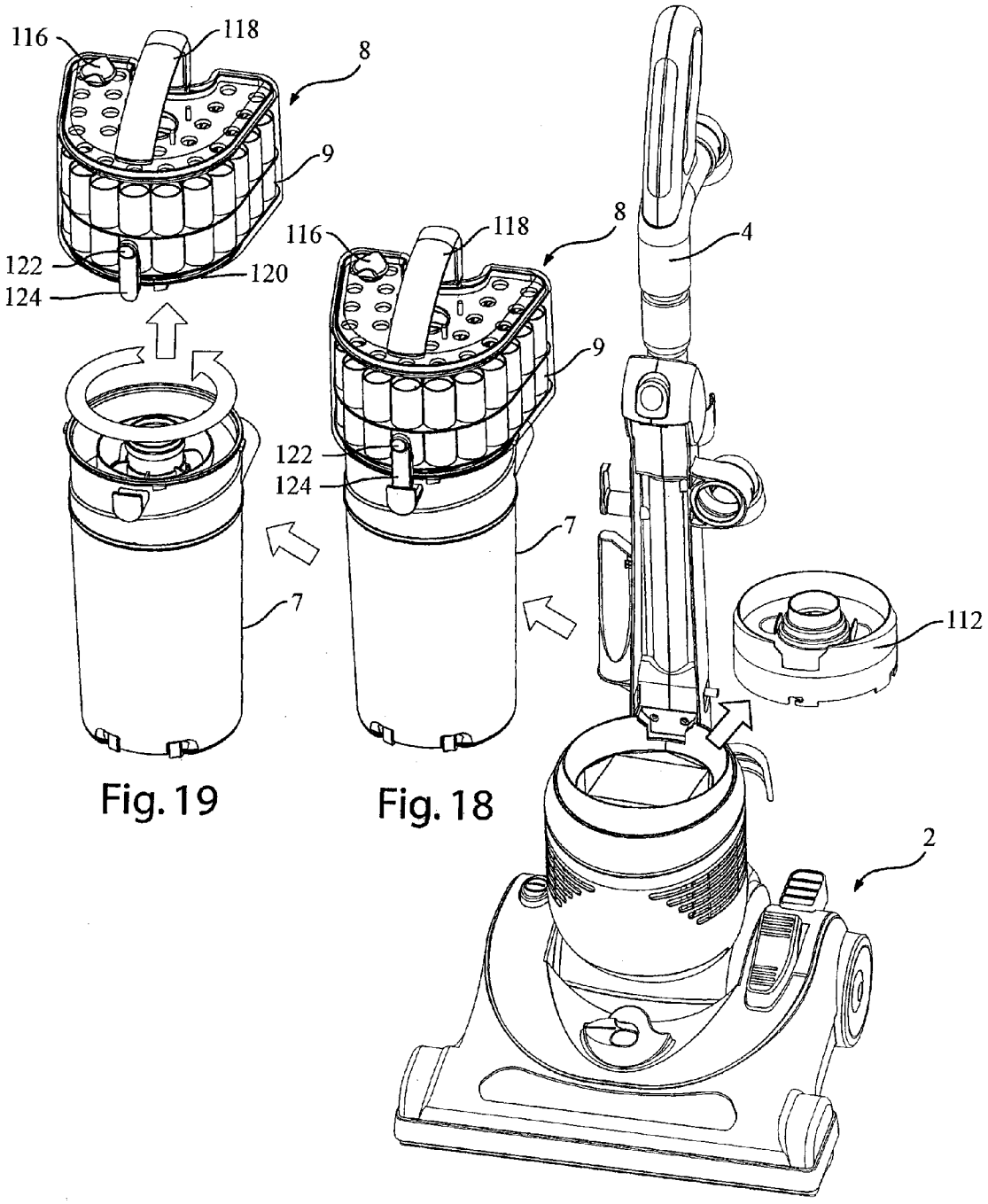

Fig. 19

Fig. 18

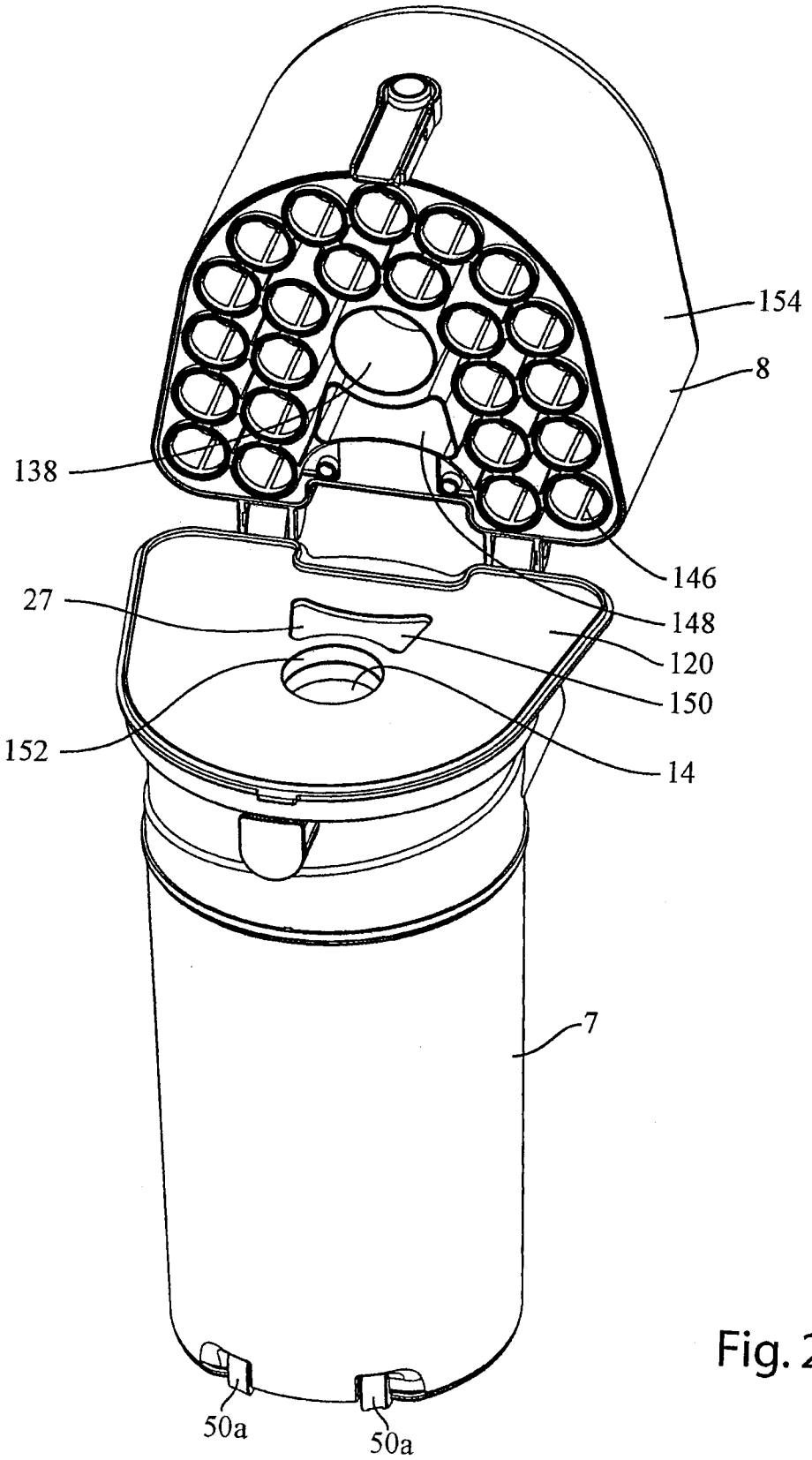

Fig. 20

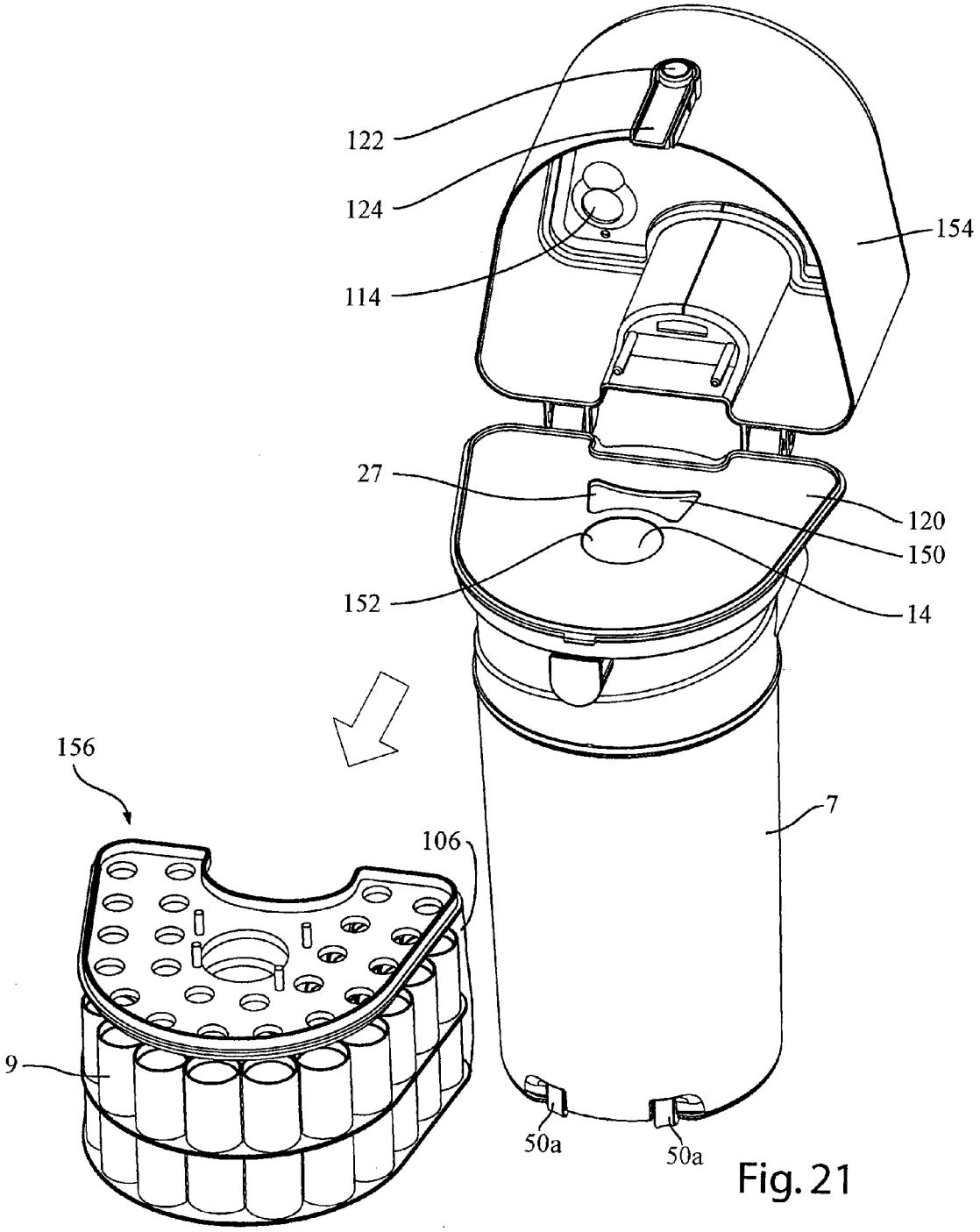

Fig. 21

VACUUM CLEANER WITH A MOVEABLE DIVIDER PLATE

FIELD OF THE INVENTION

[0001] In one aspect, this invention relates to a cyclonic surface cleaning apparatus, such as a vacuum cleaner that has a plate to divide a dirt collection chamber from a cyclone chamber. The vacuum cleaner may have a cyclonic stage that comprises a plurality of cyclones in parallel or a plurality of cyclonic stages wherein at least two cyclonic stages comprise a plurality of cyclones in parallel. In another aspect, this invention relates to improved cyclone designs. In a further aspect, this invention relates to improved designs for an array of cyclones, including designs wherein the cyclones are positioned side by side, wherein some, and preferably all of the cyclones are connected in parallel.

BACKGROUND OF THE INVENTION

[0002] Cyclonic vacuum cleaners are known in the art. In addition, cyclonic vacuum cleaners which comprise a first stage cyclone and plurality of second stage cyclones are known. An example is shown in Conrad (U.S. Pat. No. 6,782,585). As shown therein, a vacuum cleaner has a first cyclonic cleaning stage comprising a single first stage cyclone and a second cyclonic cleaning stage downstream from the first cyclonic cleaning stage and comprising a plurality of cyclones in parallel.

[0003] The plurality of second stage cyclones typically remove particulate matter finer than the particulate matter that is removed in the first cyclonic cleaning stage. Accordingly, the coarsest particulate matter that is entrained in an air stream is removed in the first cyclonic cleaning stage and finer particulate matter is removed in the downstream cyclonic cleaning stage. However, the air exiting the second cyclonic cleaning stage may still contain sufficient particulate matter to damage a suction motor positioned downstream from the second cyclonic cleaning stage. Accordingly, as shown in Conrad, a filter may be positioned downstream from the second cyclonic cleaning stage and upstream from the suction motor.

SUMMARY OF THE INVENTION

[0004] In accordance with a first embodiment, a cyclone chamber for a vacuum cleaner may have a plate positioned intermediate the opposed ends (the top end and the bottom end) of the casing of a cyclone separator so as to divide the interior of the cyclone casing into an upper cyclone chamber and a lower dirt collection area or chamber positioned beneath the upper cyclone chamber. The plate, in conjunction with the structure of the cyclone separator, produces a passage that connects the cyclone chamber and the dirt collection chamber in communication such that dirt that enters the cyclone chamber is conveyed to the dirt collection chamber. All, or at least a portion of the passage, extends laterally or outwardly.

[0005] The plate may be any of those known in the art such as those disclosed in U.S. Pat. No. 6,874,197. The plate may have a plurality of openings therein or, preferably, it is solid. The plate is positioned inward from the outer wall of the casing so as to define an annular gap between the outer peripheral edge of the plate and the inner wall of the cyclone casing. The plate overlaps a portion of a flow director or a portion of an outwardly extending portion of the casing to define the passage. The peripheral wall of the plate may be of varying geometries and orientations to assist in particle removal.

[0006] In an alternate embodiment, instead of a plate, the central portion of the bottom of the cyclone casing may be raised inwardly so as to define a plateau. Accordingly, the dirt collection chamber need not extend under the plate or plateau.

[0007] In accordance with a first embodiment of this aspect, there is provided an indoor vacuum cleaner comprising:

[0008] (a) a dirty air inlet;

[0009] (b) a handle;

[0010] (c) a cyclone separator having an outer wall, a fluid inlet downstream from the dirty air inlet and a fluid outlet;

[0011] (d) a plate having a cyclone chamber surface and positioned to substantially divide the cyclone separator into a cyclone chamber and a dirt collection chamber, each of the cyclone chamber and the dirt collection chamber having an outer wall, the outer wall of each of the cyclone chamber and the dirt collection chamber having an outer perimeter, the dirt collection chamber having a cyclone chamber end spaced from a dirt collection floor;

[0012] (d) a passage extending between the cyclone chamber and the dirt collection chamber, the passage configured such that separated dirt travels at least outwardly as the dirt travels through the passage; and,

[0013] (e) an air flow motor.

[0014] In one embodiment, the passage is formed between the cyclone chamber surface of the plate and an outwardly extending portion of the outer wall of the cyclone separator.

[0015] In another embodiment, the dirt collection chamber and the cyclone chamber each have an outer perimeter, the plate is positioned below the outwardly extending portion and the outer perimeter of the dirt collection chamber is larger then the outer perimeter of the cyclone chamber.

[0016] In another embodiment, the plate comprises a disc positioned adjacent the cyclone chamber end of the dirt collection chamber and the dirt collection chamber extends under at least a portion of the disc.

[0017] In another embodiment, the plate comprises a floor of the cyclone chamber and the dirt collection chamber does not extend under all of the floor.

[0018] In another embodiment, the plate comprises a floor of the cyclone chamber and the dirt collection chamber does not extend under the floor.

[0019] In another embodiment, the vacuum cleaner further comprises a flow director having a flow directing surface that extends inwardly and downwardly into the cyclone chamber from the outer wall of the cyclone chamber to a position above the plate and the passage is formed between the flow director and the cyclone chamber surface of the plate.

[0020] In another embodiment, the vacuum cleaner further comprises an annular dirt collection region collinear with the

cyclone chamber and separated therefrom by an inner annular wall that has a terminal end spaced from the plate and the passage is formed between the terminal end and the cyclone chamber surface of the plate.

[0021] In another embodiment, the fluid outlet comprises a tube having an inlet and the tube extends along the axis of the cyclone chamber to a position below the fluid inlet and has an end that is spaced from the plate. Preferably, a screen is provided in covering relation to the inlet of the air flow tube and the screen is spaced from the plate.

[0022] In another embodiment, the cyclone separator has a diameter adjacent the fluid inlet and the passage has a height that is less than ⅓ the diameter, preferably, less than ⅙ the diameter, more preferably less than 1/10 the diameter and most preferably less than 1/20 the diameter.

[0023] In another embodiment, the dirt collection chamber has a bottom that is openable.

[0024] In another embodiment, the plate is removably subsequent to the bottom being opened.

[0025] In accordance with a second embodiment of this aspect, there is provided a cyclone separator comprising:

[0026] (a) an outer wall, a fluid inlet and a fluid outlet, the fluid outlet comprises a tube having an inlet and the tube extends along the axis of the cyclone separator to a position below the fluid inlet;

[0027] (b) a plate having a cyclone chamber surface and positioned to substantially divide the cyclone separator into a cyclone chamber and a dirt collection chamber, each of the cyclone chamber and the dirt collection chamber having an outer wall, the outer wall of each of the cyclone chamber and the dirt collection chamber having an outer perimeter, the dirt collection chamber having a cyclone chamber end spaced from a dirt collection floor, the fluid outlet has an end that is spaced from the plate; and,

[0028] (c) a passage extending between the cyclone chamber and the dirt collection chamber, the passage configured such that separated dirt travels at least outwardly as the dirt travels through the passage.

[0029] In another embodiment, the plate is removably subsequent to the bottom being opened.

[0030] It will be appreciated that any of the alternate embodiments set out with respect to the first embodiment may be used with this second embodiment. and that they may be combined in an apparatus in any combination or sub-combination.

[0031] In accordance with a third embodiment of this aspect, there is provided a cyclone separator comprising:

[0032] (a) an outer wall, a fluid inlet and a fluid outlet, the cyclone separator has a diameter adjacent the fluid inlet;

[0033] (b) a plate having a cyclone chamber surface and positioned to substantially divide the cyclone separator into a cyclone chamber and a dirt collection chamber, each of the cyclone chamber and the dirt collection chamber having an outer wall, the outer wall of each of the cyclone chamber and the dirt collection chamber having an outer perimeter, the dirt collection chamber having a cyclone chamber end spaced from a dirt collection floor; and,

[0034] (c) a passage extending between the cyclone chamber and the dirt collection chamber, the passage configured such that separated dirt travels at least outwardly as the dirt travels through the passage, the passage has a height that is less than ⅓ the diameter.

It will be appreciated that any of the alternate embodiments set out with respect to the first embodiment may be used with this third embodiment and that they may be combined in an apparatus in any combination or sub-combination.

[0035] In accordance with a second embodiment of the instant invention, a plate of the first embodiment, or any plate known in the art, is moveably mounted in a cyclone casing independent of the movement of a bottom opening door, or may be removably mounted. For example, the plate may be secured in position by means of magnets. Alternately, the plate may be held in position mechanically, such as by the plate having one or more members that are received in an opening and secured therein by, e.g., a releasable snap fit. Thus the plate may be snapped into position and removed therefrom as required. Alternately, or in addition, the plate may be mounted on a mechanical member for movement from a first position wherein the plate divides the cyclone casing interior into a cyclone chamber and a dirt collection chamber and a second position wherein the plate has been moved to a position wherein the plate is positioned such that dirt may pass generally freely from one chamber to the other and then out an open end of the cyclone casing. For example, the plate may be pivoted to a position generally parallel to the longitudinal axis of the cyclone casing.

[0036] One advantage of this design is that the magnets permit the plate to be removed for disposal and/or cleaning. In addition, a further advantage of using magnets is that the magnets will assist in attracting and retaining magnetic particles in the cyclone chamber, thereby increasing the efficiency of the cyclone. In particular, carbon dust, which is produced by electric motors that have brushes, is magnetic. Accordingly, the use of a cyclone or cyclones incorporating magnets will assist in the removal of carbon dust from an air stream. Accordingly, it is preferred to utilize a cyclone or array of cyclones containing magnets downstream from a motor and, optionally, in place of a filter, such as a HEPA filter. It will be appreciated that magnets may be used to assist in particle capture in any of the embodiments set out herein.

[0037] In accordance with a first embodiment of this aspect, there is provided a surface cleaning apparatus comprising:

[0038] (a) a dirt inlet;

[0039] (b) a handle;

[0040] (c) a cyclone separator having an outer wall, a fluid inlet downstream from the dirt inlet and a fluid outlet;

[0041] a plate having a cyclone chamber surface and positioned to substantially divide the cyclone separator into a cyclone chamber and a dirt collection chamber, the plate being removably mounted in the cyclone separator;

[0042] (d) a passage extending between the cyclone chamber and the dirt collection chamber; and,

[0043] (e) a fluid flow motor.

[0044] In one embodiment, the plate is retained in position in the cyclone separator by magnets.

[0045] In another embodiment, the plate is mechanically retained in position. For example, the cyclone separator has a mechanical engagement member and the plate has a portion that is engageable with the mechanical engagement member.

[0046] In another embodiment, the plate has a hand grip portion. Preferably, the hand grip portion comprises a shaft extending away from the plate.

[0047] In another embodiment, the dirt collection chamber extends under the plate.

[0048] In another embodiment, a flow director having a flow directing surface that extends inwardly and downwardly into the cyclone chamber from the outer wall of the cyclone chamber to a position above the plate.

[0049] In another embodiment, the surface cleaning apparatus is selected from the group consisting of a vacuum cleaner, a sweeper and a carpet extractor.

[0050] In another embodiment, the dirt collection chamber has a bottom that is openable.

[0051] In another embodiment, the plate is removably subsequent to the bottom being opened.

[0052] In accordance with a second embodiment of this aspect, there is provided a surface cleaning apparatus comprising:

[0053] (a) a dirt inlet;

[0054] (b) a handle;

[0055] (c) a cyclone separator having an outer wall, a fluid inlet downstream from the dirt inlet, an openable bottom and a fluid outlet;

[0056] (d) a plate having a cyclone chamber surface and positioned to substantially divide the cyclone separator into a cyclone chamber and a dirt collection chamber, the plate being movably mounted in the cyclone separator independent of the bottom;

[0057] (e) a passage extending between the cyclone chamber and the dirt collection chamber; and,

[0058] (f) a fluid flow motor.

[0059] It will be appreciated that any of the alternate embodiments set out with respect to the first embodiment may be used with this second embodiment. and that they may be combined in an apparatus in any combination or sub-combination.

[0060] In accordance with a third aspect of the instant invention, a filtration unit for a surface cleaning apparatus, preferably a vacuum cleaner, uses at least two cyclonic stages wherein each stage comprises a plurality of cyclones in parallel. An advantage of this design is that the backpressure across the cyclones is reduced. For example, the cyclonic separation construction of the filtration unit, may include a first stage comprising a plurality of cyclones in parallel and a second stage comprising a plurality of cyclones in parallel. In current known design, a single first stage cyclone is used. In comparison, pursuant to this third embodiment, the dirty air in a surface cleaning apparatus may be first subjected to treatment in a cyclonic stage comprising a plurality of cyclones in parallel and subsequently treated in a cyclonic stage comprising a plurality of cyclones in parallel wherein both stages are preferably upstream of the air flow motor. A third cyclonic stage comprising a plurality of cyclones in parallel may be positioned downstream from the air flow motor.

[0061] Preferably, each cyclone of one stage is not in fluid flow communication with all of the cyclones of the subsequent stage. More preferably, each of the cyclones of one stage is in fluid communication with only one downstream cyclone. Accordingly, the air exiting one cyclone is fed to only one downstream cyclone.

[0062] In accordance with this preferred design, the outlet from an upstream cyclone is connected in fluid communication with the inlet to a downstream cyclone. The outlet of the upstream cyclone may be tangential or a spiral, which extends for less than a full revolution. More preferably, the outlet of the upstream cyclone and the inlet of the downstream cyclone each are configured such that they individually extend for less than a full revolution. When the outlet and the inlet are directly connected together, together they may comprise a continuous spiral that extends more than one revolution. Accordingly, the outlet from the upstream cyclone and the inlet to the downstream cyclone, when merged, may form a continuous spiral. One advantage of this design is that the rotational momentum of the air developed in an upstream cyclone may be utilized and, preferably, enhanced in a downstream cyclone. For example, when an air stream enters a first cyclone, energy will be expended to produce rotational motion in the air. If a tangential outlet is utilized, then some of the rotational momentum may be preserved and in fact enhanced, as the air travels through the tangential outlet. If the tangential outlet merges or is fed to the inlet of a downstream cyclone, then the rotational momentum may be preserved and enhanced without having a substantially longer spiral or tangential inlet. It will be appreciated that the use of a tangential outlet from an upstream cyclone and a tangential inlet to a downstream cyclone wherein they are connected to maintain at least some rotational momentum, and preferably are connected together, may be used in alternate constructions. For example, they may be used with any embodiment disclosed herein. They may be used in embodiments wherein one cyclone is in communication with more than one downstream cyclone and in other fields of application.

[0063] In accordance with a first embodiment of this aspect, there is provided a household appliance comprising:

[0064] (a) a dirt inlet;

[0065] (b) first and second cyclonic stages wherein each cyclonic stage comprises a plurality of cyclones in parallel and the second cyclonic stage is downstream from the first cyclonic stage; and,

[0066] (c) a fluid flow motor.

[0067] In one embodiment, at least one of the cyclones has a dirt collection chamber that, during operation of the portable appliance, is not in communication with any other cyclone.

[0068] In another embodiment, each cyclone of at least one of the cyclonic stages has an associated dirt collection chamber and each dirt collection chamber is associated with only one cyclone. Preferably, all of the dirt collection chambers are emptied concurrently. More preferably, the dirt collection chambers have a common openable bottom.

[0069] In another embodiment, each cyclone in the second cyclonic stage is connected in fluid flow communication with one cyclone in the first cyclonic stage.

[0070] In another embodiment, each cyclone of the first cyclonic stage has a fluid outlet and each cyclone of the second cyclonic stage has a fluid inlet and the outlet of a cyclone of the first cyclonic stage and the inlet of a cyclone of the second cyclonic stage form a continuous passage. Preferably, the fluid outlet is configured to maintain at least some of the cyclonic flow produced by fluid flowing through an associated cyclone. More preferably, the passage comprises a continuous curve.

[0071] In another embodiment, at least one of the cyclonic stages comprises at least 15 cyclones in parallel, preferably at least 20 and more preferably about 25 or more.

[0072] In another embodiment, at least one of the cyclonic stages comprises at least one cyclone per square inch and, preferably, at least two cyclones per square inch.

[0073] In another embodiment, the appliance is a surface cleaning apparatus, a household air cleaner or a breathing mask.

[0074] In another embodiment, the appliance is a surface cleaning apparatus.

[0075] In another embodiment, the surface cleaning apparatus is selected from the group consisting of a vacuum cleaner, a sweeper and a carpet extractor.

[0076] In another embodiment, the cyclonic stages are positioned upstream from the motor. Preferably, the air travels from the cyclonic stages to the motor without passing through a filter.

[0077] In another embodiment, the portable appliance further comprises an additional cyclonic stage wherein three cyclonic stages are positioned upstream from the motor.

[0078] In another embodiment, the air travels from the three cyclonic stages to the motor without passing through a filter.

[0079] In another embodiment, the portable appliance further comprises a post motor cyclonic stage. Preferably, fluid exiting the post motor cyclonic stage has a level of filtration at least equal to HEPA without the use of a HEPA filter. Alternately, or in addition, the post motor cyclonic stage comprises a plurality of cyclones in parallel.

[0080] In another embodiment, the first and second cyclonic stages are each separately removable from the appliance.

[0081] It will be appreciated that any of these alternate embodiments may be combined in an apparatus in any combination or sub-combination.

[0082] In accordance with a fourth aspect of the instant invention, a surface cleaning apparatus, preferably a vacuum cleaner, has two cyclonic stages wherein one of the cyclonic stages comprises a plurality of cyclones in parallel and at least one dirt collection chamber associated therewith, wherein the plurality of cyclones and associated dirt collection chamber or chambers comprise a cyclonic unit which is removable from the surface cleaning apparatus as a sealed unit, other than openings for fluid flow passages leading to and from the cyclones. In a preferred embodiment, the dirt collection chambers have a sufficient capacity such that they may require emptying only once a month, during normal use, preferably once every three months and more preferably once every four months. Once advantage of this design is that, due to the increased storage capacity, the cyclonic unit need only be removed and emptied occasionally and therefore may remain in the surface cleaning apparatus much of the time when a main or first stage collection chamber is removed for emptying. For example, if a first cyclonic stage is removed for emptying, retaining a second cyclonic stage in the surface cleaning apparatus reduces the weight and size of the component that is removed from the surface cleaning apparatus when the first stage is to be emptied.

[0083] Alternately, or in addition, in accordance with this fourth embodiment, a surface cleaning apparatus, preferably a vacuum cleaner, has at least first and second cleaning stages wherein the first cleaning stage has a dirt collection member and the second cleaning stage comprises a plurality of cyclones and at least one dirt collection chamber, wherein the first and second cleaning stages are emptied separately. Preferably, each stage comprises a plurality of cyclones and, more preferably, each stage comprises a plurality of dirt collection chambers.

[0084] In accordance with a first embodiment of this aspect, there is provided a portable vacuum cleaner comprising:

[0085] (a) a dirty air inlet;

[0086] (b) a handle;

[0087] (c) at least first and second cleaning stages wherein the first cleaning stage has a dirt collection member and the second cleaning stage comprises a plurality of cyclones and at least one dirt collection chamber, wherein the first and second cleaning stages are emptied separately; and,

[0088] (d) an air flow motor.

[0089] In one embodiment, the second cleaning stage is removed from the first cleaning stage prior to emptying the second cleaning stage.

[0090] In another embodiment, the second cleaning stage is removed by itself from the vacuum cleaner. Preferably, second cleaning stage includes at least one filter.

[0091] In another embodiment, the first and second cleaning stages are each separately removable from the vacuum cleaner. Preferably, the second cleaning stage is downstream from the first cleaning stage. Alternately, or in addition, the first cleaning stage comprises at least one cyclone and the dirt collection member comprises a dirt collection chamber.

[0092] In another embodiment, the first cleaning stage has a capacity to store dirt for a predetermined number of one hour sessions of use of the vacuum cleaner for regular household cleaning and the second cleaning stage has a

capacity to store dirt for at least three times and, preferably ten times, the predetermined number.

[0093] In another embodiment, each of the first and second cleaning stages has a storage volume and the storage volume of the second stage is selected such that, when the vacuum cleaner is used to collect particulate matter for which the vacuum cleaner is designed, the second cleaning stage requires emptying not more than once for every three times, and preferably not more than once every ten times, the first stage is emptied.

[0094] In another embodiment, the second cleaning stage has a capacity to store dirt for at least one month of regular use of the vacuum cleaner.

[0095] In another embodiment, the second cleaning stage has a capacity to store dirt for at least three months of regular use of the vacuum cleaner.

[0096] In another embodiment, the second cleaning stage has a plurality of dirt collection chambers that are emptied concurrently.

[0097] In another embodiment, each cyclone of the second cleaning stage has an associated dirt collection chamber and each dirt collection chamber is associated with only one cyclone and all of the dirt collection chambers of the second cleaning stage are emptied concurrently.

[0098] In another embodiment, the plurality of cyclones and at least one dirt collection chamber are removable as a closed unit from the vacuum cleaner. Preferably, the dirt collection chamber has an openable bottom. Alternately, or in addition, the second cleaning stage has a plurality of dirt collection chambers that are emptied concurrently.

[0099] In another embodiment, the second cleaning stage is sealed when removed from the vacuum cleaner other than fluid flow passages leading to and from the cyclones.

[0100] In another embodiment, the vacuum cleaner is selected from the group consisting of an upright vacuum cleaner, a wet/dry vacuum cleaner and a canister vacuum cleaner.

[0101] In another embodiment, the vacuum cleaner further comprises a door moveable to an open position wherein the second cleaning stage is removable when the door is in the open position.

[0102] In another embodiment, the second cleaning stage is slidably removable from the vacuum cleaner.

[0103] In another embodiment, the second cleaning stage is removably mounted to the first cleaning stage. Preferably, the second cleaning stage is moveable upwardly from the first cleaning stage.

[0104] It will be appreciated that any of these alternate embodiments may be combined in an apparatus in any combination or sub-combination.

[0105] In accordance with a second embodiment of this aspect, there is provided a surface cleaning apparatus comprising:

[0106] (a) a dirt inlet;

[0107] (b) a handle;

[0108] (c) at least first and second cleaning stages wherein the second cleaning stage comprises a plurality of cyclones and at least one dirt collection chamber, wherein, other than fluid flow passages leading to and from the cyclones, the second cleaning stage is removable from the surface cleaning apparatus as a sealed unit for emptying; and,

[0109] (d) an air flow motor.

[0110] It will be appreciated that any of the alternate embodiments set out with respect to the first embodiment may be used with this second embodiment. and that they may be combined in an apparatus in any combination or sub-combination

[0111] In accordance with a fifth aspect of this invention, a surface cleaning apparatus is constructed with a plurality of cyclones in parallel that have at least one associated dirt collection chamber, and preferably a plurality of dirt collection chambers, wherein the interior of the at least one dirt collection chamber, and preferably each dirt collection chamber, is visible from a position exterior to the surface cleaning apparatus. Therefore, a consumer can see the amount of dirt collected in the dirt chamber and determine when the dirt chamber should be emptied. This is particularly advantageous if the surface cleaning apparatus has two cyclonic stages and the stages are separately emptyable and, more preferably, separately removable. Therefore, a consumer will be able to visually determine when the stage should be emptied. This aspect is particularly preferred if combined with the fourth aspect, especially if the second stage has a dirt capacity wherein it need not be emptied every time the first stage is emptied.

[0112] While all or part of the associated cyclone(s) and the dirt collection chamber(s) may be transparent (i.e., see through), in a particularly preferred embodiment, the only transparent portion need be the upper end of the dirt collection chamber (e.g., the portion extending below a maximum fill line). Thus only the top, or all of, the dirt collection chamber(s) may be transparent. One advantage of this design is that when the dirt collection bin is full, a user will not see into the interior of any of the dirt collection chamber and will have a visual signal to empty the cyclonic stage. If both the interior of the cyclone and the dirt collection chamber are visible, then a consumer may overfill the dirt collection chamber thereby decreasing the efficiency of the surface cleaning apparatus. Preferably, the portion above a predetermined fill line is not transparent. For example, all of the cyclone casing may be made from transparent plastic and the required portion may be masked by coating it (e.g., paint) and/or by applying a label.

[0113] In accordance with a first embodiment of this aspect, there is provided a surface cleaning apparatus comprising:

[0114] (a) a dirt inlet;

[0115] (b) a handle;

[0116] (c) a cyclonic cleaning unit comprising a plurality of cyclones and at least one dirt collection chamber, each of the plurality of cyclones having an outer wall, an interior, a fluid inlet downstream from the dirt inlet and a fluid outlet;

[0117] (d) the at least one dirt collection chamber having an outer wall and an interior, wherein the surface cleaning apparatus is constructed such that the interior of the at least one dirt collection chamber is visible from a position exterior to the surface cleaning apparatus; and,

[0118] (e) a fluid flow motor.

[0119] In one embodiment, the outer wall of the at least one dirt collection chamber has at least a transparent portion.

[0120] In another embodiment, the at least one dirt collection chamber has a maximum recommended dirt capacity and the transparent portion extends downwardly from a position defining the maximum recommended dirt capacity.

[0121] In another embodiment, the at least one dirt collection chamber has a maximum recommended dirt capacity and the outer wall of the at least one dirt collection chamber is opaque above a position defining the maximum recommended dirt capacity.

[0122] In another embodiment, the outer wall of the at least one dirt collection chamber is an outer wall of the surface cleaning apparatus. Preferably, all of the outer wall of the at least one dirt collection chamber is transparent. More preferably, the surface cleaning apparatus further comprises a transparent wall positioned radially outwardly of the outer wall of the at least one dirt collection chamber.

[0123] In another embodiment, the surface cleaning apparatus further comprises a wall positioned exterior to the outer wall of the at least one dirt collection chamber, at least a sufficient portion of which is transparent to permit a user to view the transparent portion of the outer wall of the at least one dirt collection chamber.

[0124] In another embodiment, each of the plurality of cyclones has an associated dirt collection chamber. Preferably each of the associated dirt collection chambers has an outer wall, at least a portion of which is transparent. Alternately, or in addition, each of the associated dirt collection chambers has a bottom that is openable.

[0125] In another embodiment, each of the plurality of cyclones has a plate positioned to substantially divide the cyclone separator into a cyclone chamber and a dirt collection chamber.

[0126] In another embodiment, the surface cleaning apparatus has at least first and second cyclonic stages and the cyclonic cleaning unit comprises the second cyclonic stage.

[0127] In another embodiment, the first and second cyclonic stages are each separately removable from the surface cleaning apparatus.

[0128] In another embodiment, the first cyclonic stage comprises a single cyclone.

[0129] In another embodiment, the first cyclonic stage comprises a plurality of cyclones in parallel. Preferably, the plurality of cyclones of the first cyclonic cleaning unit have at least one first stage dirt collection chamber, the at least one first stage dirt collection chamber having a first stage outer wall and a first stage interior, wherein the surface cleaning apparatus is constructed such that the first stage interior is visible from a position exterior to the surface cleaning apparatus.

[0130] In another embodiment, at least a portion of the outer wall of each of the cyclones is transparent.

[0131] In another embodiment, the outer wall of each of the cyclones is transparent.

[0132] In another embodiment, the portion of the outer walls of the cyclones form an outer wall of the surface cleaning apparatus.

[0133] In another embodiment, the surface cleaning apparatus further comprises a wall positioned exterior to the outer wall of the cyclones, at least a sufficient portion of which is transparent to permit a user to view the transparent portion of the outer wall of the cyclones.

[0134] In another embodiment, each cyclone and associated dirt collection chamber is integrally molded from transparent plastic. Preferably, the outer walls of the dirt collection chambers are a portion of an outer surface of the surface cleaning apparatus and the transparent plastic of the cyclone is treated to render the sidewalls of the cyclones opaque. Alternately, or in addition, the surface cleaning apparatus further comprises a wall positioned exterior to the cyclonic cleaning unit, at least a sufficient portion of which is transparent to permit a user to view the interior of only the dirt collection chambers.

[0135] In another embodiment, the surface cleaning apparatus further comprises a header in fluid flow communication with the fluid outlets from the cyclones wherein the header is transparent.

[0136] In another embodiment, the surface cleaning apparatus further comprises a filter housing, at least a portion of which is transparent. Preferably, the transparent portion of the filter housing is visible when the vacuum cleaner is in use.

[0137] In another embodiment, the surface cleaning apparatus further comprises a filter housing, at least a portion of which is transparent wherein the transparent portion of the filter housing is visible when at least one of the cyclonic stages is removed.

[0138] It will be appreciated that any of these alternate embodiments may be combined in an apparatus in any combination or sub-combination.

[0139] In accordance with a second embodiment of this aspect, there is provided a surface cleaning apparatus comprising:

[0140] (a) a dirt inlet;

[0141] (b) a handle;

[0142] (c) at least one cyclonic cleaning stage;

[0143] (d) a filter housing, at least a portion of which is transparent; and,

[0144] (e) a fluid flow motor.

[0145] In one embodiment, the transparent portion of the filter housing is visible when the vacuum cleaner is in use.

[0146] In another embodiment, the cyclonic cleaning stage is removable from the surface cleaning apparatus and the transparent portion of the filter housing is visible when the cyclonic cleaning stage is removed.

[0147] In another embodiment, the surface cleaning apparatus further comprises an openable door and the transparent portion of the filter housing is visible when the door is open.

[0148] In another embodiment, filter is a pre-motor filter.

[0149] In another embodiment, all of the filter housing is transparent.

[0150] In another embodiment, the surface cleaning apparatus has at least first and second cyclonic cleaning stages. Preferably, the first and second cyclonic cleaning stages are each separately removable from the surface cleaning apparatus. Alternately, or in addition, the first cyclonic cleaning stage comprises a single cyclone. Alternately, or in addition, at least one cyclonic cleaning stage comprises a plurality of cyclones in parallel.

[0151] It will be appreciated that any of the alternate embodiments set out with respect to the first embodiment may be used with this second embodiment and that they may be combined in an apparatus in any combination or sub-combination.

[0152] In accordance with a sixth aspect of this invention, a surface cleaning apparatus is provided with at least a visible portion of the interior of a cyclone separator and an illumination member that is positioned to provide illumination to at least a portion of the cyclone separator interior. One advantage of this design is that it enhances the ability of a user to view the cyclonic action in the cyclone chamber (and know if there is a problem by the air flow pattern) and/or to know when the dirt collection chamber requires emptying. For example, if a vacuum cleaner is used under low light conditions, e.g. at night in a room, then it may be difficult for a consumer to view the interior of the cyclone separator. It will be appreciated that this aspect is particularly useful if combined with one or both of the fourth and fifth aspects.

[0153] If too much dirt accumulates in a dirt collection chamber, then the efficiency of the cyclone decreases and the amount of dirt that travels through the cyclone without being captured increases. This may result in excessive dirt passing through the suction motor of an appliance, such as a vacuum cleaner, thereby shortening the life expectancy of the appliance. Enhancing the ability of a consumer to monitor the dirt that has been captured by a cyclone separator reduces the likelihood of a consumer allowing too much dirt to accumulate in a dirt collection bin of a cyclone.

[0154] In accordance with this aspect, all or a portion of the cyclone separator casing may be constructed from an electroluminescent material. Alternately, the inner wall of all or a portion of a cyclone may be coated with an electroluminescent material.

[0155] For example, all or a portion of the front portion of the cyclone may be transparent and all or a portion of the rear portion may have an electroluminescent coating. The illumination provided by the electroluminescent material enhances the ability of a consumer to view the interior of the cyclone chamber and determine the amount of dirt that has accumulated therein. Accordingly, it will be more apparent to a consumer when the dirt collection chamber or bin (which is preferably part of the cyclone separator casing) needs to be emptied. Alternately, only the cyclone separator casing housing the cyclone chamber may be so treated or made of an electroluminescent material, whereby the appearance of dirt accumulating in the cyclone chamber may be a visible signal to a user to empty the dirt collection chamber.

[0156] Alternately, or in addition, one or more lights may be provided internal of a cyclone chamber and/or directed at the interior of a cyclone chamber so as to enhance the ability of a consumer to determine the amount of dirt present in the cyclone chamber. Preferably, the light comprises one or more LEDs.

[0157] In accordance with an embodiment of this aspect, there is provided a surface cleaning apparatus having an outer surface and comprising:

[0158] (a) a dirt inlet;

[0159] (b) a handle;

[0160] (c) a cyclone separator having a cyclone separator interior and an outer wall having an inner surface, the cyclone separator comprising a cyclone chamber and a dirt collection chamber, the dirt collection chamber and the cyclone chamber each having an outer wall, the surface cleaning apparatus is constructed such that the cyclone separator interior is visible from a position exterior to the surface cleaning apparatus;

[0161] (d) an illumination member positioned to provide illumination to at least a portion of the cyclone separator interior; and,

[0162] (e) a fluid flow motor.

[0163] In one embodiment, the illumination member comprises electroluminescent material and a portion of the cyclone separator is constructed from the electroluminescent material. Preferably, the cyclone separator has a front portion and a rear portion and the rear portion is constructed from the electroluminescent material and the front portion is transparent.

[0164] In another embodiment, the illumination member comprises an electroluminescent coating and a portion of the cyclone separator is coated with the electroluminescent coating. Preferably, the cyclone separator has a front portion and a rear portion and the rear portion is coated with the electroluminescent coating and the front portion is transparent.

[0165] In another embodiment, the illumination member comprises at least one light.

[0166] In another embodiment, the light is positioned within the cyclone separator.

[0167] In another embodiment, the light is positioned exterior to the cyclone separator and light produced thereby is directed inwardly to the cyclone separator interior.

[0168] In another embodiment, the light comprises at least one LED.

[0169] In another embodiment, the dirt collection chamber has a dirt chamber interior, wherein the surface cleaning apparatus is constructed such that the interior of the dirt collection chamber is visible from a position exterior to the surface cleaning apparatus and the illumination member is positioned to provide illumination to at least a portion of the dirt chamber interior.

[0170] In another embodiment, the outer wall of the cyclone separator has at least a transparent portion and the transparent portion forms a portion of the outer surface of the surface cleaning apparatus.

[0171] In another embodiment, the outer wall of the dirt collection chamber has at least a transparent portion and the transparent portion forms a portion of the outer surface of the surface cleaning apparatus.

[0172] In another embodiment, the outer wall of the cyclone separator has at least a transparent portion and the surface cleaning apparatus further comprises a wall positioned exterior to the outer wall of the cyclone separator, at least a sufficient portion of which is transparent to permit a user to view the transparent portion of the outer wall of the cyclone separator.

[0173] In another embodiment, the outer wall of the dirt collection chamber has at least a transparent portion and the surface cleaning apparatus further comprises a wall positioned exterior to the outer wall of the dirt collection chamber, at least a sufficient portion of which is transparent to permit a user to view the transparent portion of the outer wall of the dirt collection chamber.

[0174] In another embodiment, all of the outer wall of the dirt collection chamber is transparent. Preferably, the surface cleaning apparatus further comprises a transparent wall positioned radially outwardly of the outer wall of the dirt collection chamber. Alternately, or in addition, all of the outer wall of the cyclone separator is transparent and at least one of the transparent plastic of the cyclone separator and the transparent wall is treated to inhibit a user viewing the cyclone chamber.

[0175] In another embodiment, all of the outer wall of the cyclone separator is transparent plastic, the outer wall of the cyclone separator is a portion of the outer surface of the surface cleaning apparatus and the transparent plastic of the cyclone separator is treated to render the outer wall of the cyclone chamber opaque.

[0176] It will be appreciated that any of these alternate embodiments may be combined in an apparatus in any combination or sub-combination.

[0177] In accordance with a seventh aspect of this invention, a surface cleaning apparatus is provided with a cyclonic stage comprising a plurality of cyclones in parallel and a plurality of dirt collection chambers that are emptied concurrently wherein the plurality of cyclones and the plurality of dirt collection chambers are removable as a unit from the surface cleaning apparatus. One advantage of this design is that by using a plurality of dirt collection chambers, cross flow between cyclones via the dirt exit of the cyclones is reduced. In a particularly preferred embodiment, each cyclone has its own dirt collection chamber. In practice, there may be a different vacuum level in each cyclone of a plurality of cyclones. If there is a common dirt collection chamber for a plurality of cyclones, then some air will tend to travel out the dirt exit of one cyclone and across the common dirt collection chamber and enter a second cyclone via the dirt exit of the second cyclone, resulting in some dirt reentering the second cyclone. A further advantage is that the cyclone dirt chambers are removed from the surface cleaning apparatus while closed so that they may be transported to a garbage can or the like for emptying without the contents being scattered during transport.

[0178] In accordance with an embodiment of this aspect, there is provided a surface cleaning apparatus comprising:

[0179] (a) a dirt inlet;

[0180] (b) a handle;

[0181] (c) at least a first cleaning stage comprising a plurality of cyclones in parallel and a plurality of dirt collection chambers that are emptied concurrently wherein the plurality of cyclones and the plurality of dirt collection chambers are removable as a unit from the surface cleaning apparatus; and,

[0182] (d) an air flow motor.

[0183] In one embodiment, each cyclone has an associated dirt collection chamber and each dirt collection chamber is associated with only one cyclone and all of the dirt collection chambers are emptied concurrently. Preferably, the dirt collection chambers have a common bottom that is openable.

[0184] In another embodiment, the surface cleaning apparatus further comprises a second cleaning stage and the first cleaning stage is removed from the second cleaning stage prior to emptying the plurality of dirt collection chambers.

[0185] In another embodiment, the surface cleaning apparatus further comprises a second cleaning stage and the first cleaning stage is removed by itself from the surface cleaning apparatus. Preferably, the first and second cleaning stages are concurrently removed from the surface cleaning apparatus and the first cleaning stage is removed from the second cleaning stage prior to emptying the plurality of dirt collection chambers.

[0186] In another embodiment, first cleaning stage comprises a cyclonic cleaning unit that is sealed when removed from the surface cleaning apparatus other than fluid flow passages leading to and from the cyclones.

[0187] In another embodiment, the first cleaning stage includes at least one filter removable with the first cleaning stage.

[0188] In another embodiment, the surface cleaning apparatus further comprises a door moveable to an open position wherein the first cleaning stage is removable when the door is in the open position.

[0189] In another embodiment, the first cleaning stage is slidably removable from the surface cleaning apparatus.

[0190] In another embodiment, the cyclonic cleaning unit is removably mounted to a second cleaning stage and the first cleaning stage is moveable upwardly from the first cleaning stage.

[0191] In another embodiment, the first cleaning stage comprises at least 15 cyclones in parallel.

[0192] In another embodiment, the first cleaning stage comprises at least one cyclone per square inch, preferably at least two cyclones per square inch, and more preferably at least four cyclones per square inch.

[0193] In another embodiment, the surface cleaning apparatus is selected from the group consisting of a vacuum cleaner, a sweeper and a carpet extractor.

[0194] In another embodiment, cyclones of the first cleaning stage are spaced apart to define a region between adjacent cyclones in which particulate matter collects. Preferably the region has a floor that is moveable, whereby the collection area may be emptied when the floor is moved. Preferably, the dirt collection chambers of the first cleaning stage have a common bottom that is openable and the floor is moved when the common bottom is opened. Preferably the common bottom and the floor comprise a continuous member that is moveably mounted, and preferably pivotally mounted, to the first cleaning stage.

[0195] In another embodiment, the surface cleaning apparatus further comprises a second cleaning stage and the first cleaning stage is positioned exterior to the second cleaning stage.

[0196] In another embodiment, the surface cleaning apparatus further comprises a second cleaning stage comprising at least one cyclone and the plurality of cyclones are positioned exterior to the at least one cyclone.

[0197] In another embodiment, the surface cleaning apparatus further comprises a second cleaning stage comprising at least one cyclone and the first cleaning stage is positioned exterior to the at least one cyclone.

[0198] It will be appreciated that any of these alternate embodiments may be combined in an apparatus in any combination or sub-combination.

[0199] In accordance with an eighth aspect of the instant invention, a cyclone chamber is provided with a screen that covers all or a portion of the outlet from the cyclone chamber and which is removable and, optionally, replaceable, preferably through the top (air entrance end) of the cyclone chamber. In a preferred embodiment, the screen is formed with a handle (e.g., the air outlet conduit) so that a consumer need not touch the screen during removal. A part of the top panel of the cyclone casing may be removable with the screen as an assembly and may be used to secure the assembly in position (e.g., by a screw thread, bayonet mount or other releasable means that engages with the portion of the cyclone separator casing that is not removed with the screen). The screen may have longitudinally extending side walls to define an outer perimeter screen and a transversely extending wall to define a central screen, which are connected together so as to define a screen member that has an open volume (a capture region) that is surrounded on its length, width and height by a screen material. For example, the screen may be H shaped, a square U shape or a square inverted U shape.

[0200] Alternately, or in addition, in accordance this aspect, the screen is provided in a cyclone chamber such that the air travels into an open enclosure of the screen prior to traveling through the screen to the outlet from the cyclone chamber. For example, the screen may be H shaped or a square inverted U shape. The open enclosure is surrounded on all sides (other than the bottom), by screen material, thereby enlarging the surface area of screen through which the air may travel prior to entering the cyclone outlet. The air will initially tend to travel upwardly into the open enclosure, and through the transverse member to the cyclone outlet. If the transverse member becomes clogged, the air may pass through the side wall of the open enclosure and then travel back inwardly through additional screen material into the interior of the screen prior to exiting through the cyclone outlet.

[0201] The screen is preferably constructed from a material that will assist in retaining or trapping particulate matter. For example, the screen may be made from an adhesive material. Alternately, or in addition, the screen may be provided with microfilaments that extend outwardly therefrom. The microfilaments create a surface (for example like a very fine Velcro™) material on which elongate material such as hair may become trapped.

[0202] In accordance with a first embodiment of this aspect, there is provided a surface cleaning apparatus comprising:

[0203] (a) a dirt inlet;

[0204] (b) a handle;

[0205] (c) a cyclone separator having an outer wall, a top, a fluid inlet downstream from the dirty inlet and a fluid outlet;

[0206] (d) a screen positioned around the fluid outlet such that fluid exiting the cyclone separator passes through the screen and the screen is removable through the top of the cyclone separator; and,

[0207] (e) a fluid flow motor.

[0208] In one embodiment, the fluid outlet has an upper portion positioned above the top of the cyclone separator and is removable with the screen.

[0209] In another embodiment, the upper portion of the fluid outlet is a handle for the screen.

[0210] In another embodiment, a fluid flow conduit is collinear with the fluid outlet, extends through the cyclone chamber and has an upper portion positioned above the top of the cyclone separator and the upper portion of the fluid outlet is a handle for the screen.

[0211] In another embodiment, the screen is rotatably mounted to the cyclone separator.

[0212] In another embodiment, the screen has a larger diameter than the fluid outlet. Preferably, the top of the cyclone chamber has a removable annular band that has a diameter larger than the diameter of the screen. More preferably, the removable annular band is removable with the fluid conduit and may form a one piece assembly with the fluid conduit (e.g., they may be integrally molded).

[0213] In another embodiment, the screen has an outer perimeter defining a cavity and a transverse member extending across the cavity.

[0214] In another embodiment, the fluid outlet has an inlet and the screen has a longitudinal surface that is parallel to the fluid outlet, extends past the inlet of the fluid outlet, and first and second opposed ends and the transverse member is positioned between the first and second opposed ends and the inlet to the fluid outlet is surrounded by the longitudinal surface and the transverse member. The transverse member may be positioned mid way along the longitudinal surface. Alternately the first opposed end is positioned towards the top and the transverse member is positioned adjacent the first opposed end. Alternately, the second opposed end is positioned distal from the top and the transverse member is positioned adjacent the second opposed end.

[0215] It will be appreciated that any of these alternate embodiments may be combined in an apparatus in any combination or sub-combination.

[0216] In accordance with a second embodiment of this aspect, there is also provided a surface cleaning apparatus comprising:

[0217] (a) a dirt inlet;

[0218] (b) a handle;

[0219] (c) a cyclone separator having an outer wall, a top, a fluid inlet downstream from the dirty inlet and a fluid outlet, the fluid outlet having an inlet;

[0220] (d) a screen positioned around the inlet of the fluid outlet, the screen having a longitudinal surface that is parallel to the fluid outlet, extends past the inlet of the fluid outlet, first and second opposed ends and a transverse member positioned to define a cavity interior of the longitudinal surface that is open to the fluid in the cyclone separator without passing through the screen; and,

[0221] (e) a fluid flow motor.

[0222] It will be appreciated that any of the alternate embodiments set out with respect to the first embodiment may be used with this second embodiment and that they may be combined in an apparatus in any combination or sub-combination.

[0223] It will be appreciated that any one of these aspects may be combined with one or more of the other aspects in any combination or sub-combination.

[0224] In accordance with another aspect of this invention, there is provided an improved cyclone, which may be used in a vacuum cleaner. In particular, a cyclone may have an inlet that is positioned exterior to the cyclone chamber. For example, it may be positioned on top of the cyclone. It may be formed as the upper portion of the cyclone chamber casing or it may be mounted on top of the upper casing of the cyclone and be in air flow communication with the cyclone chamber formed in the casing. The inlet comprises a spiral or tangential inlet. Preferably, the spiral ramp may extend through an arc from 15 to 360° and, preferably from 25 to 270° and, more preferably from 25 to 90°. It will be appreciated that in an alternate embodiment, the spiral inlet that extends for less than a full revolution may be constructed in the side wall of a cyclone bin. This construction may be used in conjunction with any of the aspects set out herein or, alternately, on its own.

[0225] In accordance with another aspect of the instant invention, a cyclone or a plurality of cyclones may be made from a biodegradable material. An advantage of this design is that the cyclones may be disposable. Accordingly, when deposited in a land fill site, the cyclone casing will eventually biodegrade. For example, a cyclone may be made of a paper based material that is compression molded or an injection molded starch or glucose based material so that the product is biodegradable. This construction may be used in conjunction with any of the aspects set out herein or, alternately, on its own.

[0226] In accordance with another aspect of the instant invention, the casing of a cyclone chamber, or a portion thereof, may be made from a deformable material, such as an elastomeric material. Preferably, the casing has sufficient rigidity to maintain its shape during storage and transportation of a vacuum cleaner and, more preferably, during normal operation of a vacuum cleaner. This construction may be used in conjunction with any of the aspects set out herein or, alternately, on its own.

[0227] In accordance with another aspect of the instant invention, the inner surface of the outer wall of a cyclone separator, or a portion thereof, and/or the inlet and outlet and any components therein may be coated with an adhesive material or may be lined with a removable adhesive material. For example, the adhesive material may be agar or pectin or a rubber based adhesive. One advantage of this embodiment is that particulate matter will adhere to the adhesive material as the air rotates in the cyclone chamber and contacts the outer wall of the cyclone casing or other portion having adhesive material associated therewith. Accordingly, the efficiency of the cyclone will be increased by dirt adhering to the outer wall of the cyclone. In accordance with this aspect of the invention, the cyclone, or an adhesive liner inserted in the cyclone, may be disposable. Accordingly, the cyclone casing may be constructed from a thin walled plastic (e.g. a vacuum molded plastic). Alternately, the adhesive that is selected may release dirt on contact with water. Accordingly, if a user washes out the interior of the cyclone, then the dirt, which has adhered to the outer wall of the cyclone chamber, will be removed. In a particularly preferred embodiment, it is preferred that the adhesive be provided on a downstream cyclone which is designed to remove finer particulate mater. Accordingly, this embodiment is particularly preferred for use in the second, third, fourth or other sequential stage(s) of a multistage cyclone separator where small quantities of fine particles are to be collected. This construction may be used in conjunction with any of the aspects set out herein or, alternately, on its own.

[0228] In accordance with another aspect of the instant invention, the cyclone casing may be constructed from, or may be coated with, a biocidal material. The biocidal material will prevent the growth of microbiologics, or reduce the tendency of microbiologics to grow, in the cyclone chamber. For example, a biocidal agent such as a tin arsenic compound may be added to the plastics of which the cyclone bins are molded, or biocidal materials such as surfactant lipid preparations may be applied to the interior and/or exterior surfaces of the cyclones to inhibit the growth of bacteria, molds, or viruses. This construction may be used in conjunction with any of the aspects set out herein or, alternately, on its own.

[0229] In accordance with another aspect of the instant invention, all or a portion of a cyclone casing, which may include the inlet and/or outlets of the cyclone casing and any screen material utilized therein, may be manufactured from or coated with an electret material. Electret materials are constructed so as to have a permanent electric charge polarization. For example, a plastic may be heated in the presence of an electric field and allowed to cool, resulting in permanent polarization of the plastic. One advantage of this embodiment is that all or a portion of the cyclone casing may be constructed to function as a magnet thereby increasing the efficiency of a cyclone by removing electrically charged particles. Typically, particulate matter that travels through a cyclone becomes charged due to the passage of the material at high speed through the cyclone separator. Accordingly,

the use of a cyclone casing or portions thereof, which are made from materials that have a permanent electrostatic field, enhances the separation efficiency of the cyclone, particularly finer particulate matter, by combining electrostatic attraction and cyclonic separation. Accordingly, this embodiment is particularly preferred for use in the second, third, fourth or other sequential stage(s) of a multistage cyclone separator where small quantities of fine particles are to be collected. This construction may be used in conjunction with any of the aspects set out herein or, alternately, on its own.

[0230] In accordance with another aspect of the instant invention, some or all of the particle collected in one cyclone are conveyed to another cyclone, which may be upstream or downstream, whereby at least some of the particulate matter conveyed to the upstream or downstream cyclone is collected in the particle collector for the upstream or downstream cyclone. One advantage of this embodiment is that a consumer may need to only empty a single cyclone bin of a surface cleaning apparatus. This construction may be used in conjunction with any of the aspects set out herein or, alternately, on its own.

[0231] In accordance with another aspect of the instant invention an array of cyclones is provided wherein the cyclones may be sized such that there are at least 2 cyclones, preferably at least 5 cyclones, more preferably at least 10 cyclones and most preferably at least 25 cyclones per square inch measured in a plane transverse to the longitudinal axis of the cyclone separators. This construction may be used in conjunction with any of the aspects set out herein or, alternately, on its own.

[0232] In any aspect of this invention, a cyclone separator may include any plate known in the art for defining a dirt collection chamber in a cyclone separator below the cyclone chamber. The plate is preferably positioned inward from the outer wall of the cyclone separator casing so as to define an annular gap between the outer peripheral edge of the plate and the inner wall of the cyclone casing. If the plate is spaced from the inner wall of the cyclone separator casing, then the plate has an upper surface and a lower surface and a peripheral wall that extends between the upper and lower surfaces. The peripheral wall may be of varying geometries and orientations to assist in particle removal.

BRIEF DESCRIPTION OF THE DRAWINGS

[0233] These and other advantages of the instant invention will be more fully and completely understood in association with the following description of preferred embodiments of this invention wherein:

[0234] FIG. **1** is a perspective view of a preferred embodiment of a vacuum cleaner incorporating two cyclonic cleaning stages;

[0235] FIG. **2** is a cross section along line **2-2** of the vacuum cleaner of FIG. **1**;

[0236] FIG. **2***a* is an exploded view of the cyclonic cleaning stages of the vacuum cleaner of FIG. **1**;

[0237] FIGS. **3**, **3***a* and **3***b* are perspective views of a cyclone inlet according to an alternate preferred embodiment of the instant invention;

[0238] FIG. **4** is a perspective view of a cyclone separator in accordance with an alternate preferred embodiment of the instant invention, wherein the outer casing of the cyclone separator is transparent;

[0239] FIG. **5** is a perspective view of a cyclone separator in accordance with an alternate preferred embodiment of the instant invention;

[0240] FIG. **6** is a perspective view of a cyclone separator in accordance with an alternate preferred embodiment of the instant invention;

[0241] FIG. **6***a* are side views of plates that are used in accordance with alternate embodiments of this invention to divide the interior of a cyclone separator into a cyclone chamber and a dirt collection region;

[0242] FIGS. **6***b* and **6***c* are perspective views of plates that are used in accordance with alternate embodiments of this invention to divide the interior of a cyclone separator into a cyclone chamber and a dirt collection region;

[0243] FIG. **6***d* is a vertical section through a cyclone separator showing an alternate position for a plate in accordance with an alternate preferred embodiment of the instant invention;

[0244] FIG. **6***e* is a vertical section through a cyclone separator showing an alternate preferred embodiment of the instant invention wherein the plate is mounted by means of magnets;

[0245] FIG. **6***f* is a side view of a cyclone separator showing an alternate preferred embodiment of the instant invention wherein a magnet is used to assist in particle capture;

[0246] FIG. **6***g* is a vertical section through a cyclone separator showing an alternate preferred embodiment of the instant invention wherein the plate is mounted by mechanical means to the inner surface of the side wall of the dirt collection chamber wherein the bottom door is closed;

[0247] FIG. **6***h* is a vertical section through a cyclone separator of FIG. **6**(*g*) wherein the bottom door is open;

[0248] FIG. **7** is a vertical section of a cyclone separator showing an alternate preferred embodiment of the instant invention wherein the bottom of the cyclone casing is raised to form an annular dirt collection chamber;

[0249] FIG. **7***a* is a vertical section of a cyclone separator showing an alternate preferred embodiment of the instant invention wherein the lower portion of the side walls of the cyclone casing have a larger diameter to form an enlarged dirt collection chamber;

[0250] FIG. **7***b* is a vertical section of a cyclone separator showing an alternate preferred embodiment of the instant invention wherein the bottom of the cyclone casing is raised to form an annular dirt collection chamber and a longitudinally extending annular dirt collection chamber is provided;

[0251] FIG. **7***c* is a vertical section of a cyclone separator showing an alternate preferred embodiment of the instant invention wherein a redirector is provided;

[0252] FIG. **7***d* is a vertical section of a cyclone separator showing an alternate preferred embodiment of the instant

invention wherein a redirector is provided and the outlet is in the bottom of the cyclone casing;

[0253] FIG. **8** is a perspective view of an array of cyclone separators in accordance with alternate preferred embodiment of the instant invention;

[0254] FIG. **8***a* is a top plan view of a construction detail for the array of cyclones of FIG. **8**;

[0255] FIG. **8***b* is a top plan view of an alternate construction detail for the array of cyclones of FIG. **8**;

[0256] FIG. **8***c* is a top plan view of an alternate construction detail for the array of cyclones of FIG. **8**;

[0257] FIG. **8***d* is a side view of the alternate construction detail of FIG. **8***c;*

[0258] FIG. **9** is a top plan view of the cyclone array of FIG. **8***c;*

[0259] FIG. **9***a* is a perspective view of the cyclone array of FIG. **8***c;*

[0260] FIG. **10** is an exploded perspective view of the cyclone array of FIG. **8***c* constructed as two sequential stages with a common manifold between the stages;

[0261] FIG. **11** is a top plan view of the cyclone array of FIG. **8***b;*

[0262] FIG. **11***a* is a perspective view of the cyclone array of FIG. **8***b;*

[0263] FIG. **12** is an exploded perspective view of the cyclone array of FIG. **8***b* constructed as three sequential stages with a common manifold between the stages;

[0264] FIG. **13** is a top plan view of the cyclone array of FIG. **8***a;*

[0265] FIG. **13***a* is a perspective view of the cyclone array of FIG. **8***a;*

[0266] FIG. **14** is an exploded perspective view of the cyclone array described in FIG. **8***a* constructed as two sequential stages with a common manifold between the stages

[0267] FIG. **15** is a schematic drawing of a vacuum cleaner having a plurality of cyclones in accordance with an alternate preferred embodiment of this invention;

[0268] FIG. **15***a* is an alternate schematic drawing of a vacuum cleaner having a plurality of cyclones in accordance with an alternate preferred embodiment of this invention;

[0269] FIG. **16** is a perspective view of a cyclone array removed from a vacuum cleaner wherein the water inlet port is open;

[0270] FIG. **17** is a perspective view of a vacuum cleaner wherein the second cyclonic stage is removed while the first cyclonic stage is retained in position on the vacuum cleaner;

[0271] FIGS. **18** and **19** are perspective views of a vacuum cleaner wherein the first and second cyclonic stages are removed and the first and second cyclonic stages are subsequently separated for separate emptying;

[0272] FIGS. **20** and **21** are perspective views of an alternate embodiment of a vacuum cleaner wherein the second cyclonic stage is removed while the first cyclonic stage is retained in position on the vacuum cleaner

DETAILED DESCRIPTION OF THE INVENTION

[0273] The following description of the preferred embodiments of the improvements in cyclones and arrays of cyclones are described herein with reference to their application in a surface cleaning apparatus and, in particular, a vacuum cleaner. It will be appreciated, that in different embodiments, the improvements may be used in other household appliances, such as air cleaners including portable room air cleaners, air cleaners for furnaces and the like, as well as other commercial and industrial uses including breathing masks, such as for use in hospitals and in toxic environments and air treatment systems for cars and the like.

Description of Exemplified Upright Vacuum Cleaner

[0274] In a preferred embodiment, the improvements are used in a surface cleaning apparatus and, preferably, a vacuum cleaner and, more preferably, a vacuum cleaner having a plurality of cyclonic cleaning stages. A preferred embodiment of a multi stage cyclonic vacuum cleaner that is used to exemplify the different aspects is shown in FIGS. **1** and **2**. As shown therein, vacuum cleaner **1** is an upright vacuum cleaner having a ground engaging head **2**, a main casing **3** pivotally mounted with respect to ground engaging head **2**, a handle **4** for steering vacuum cleaner **1** and an electric cord **5**. Main casing **3** has a cyclonic cleaning unit **6** comprising a first cyclonic cleaning stage **7** comprising a single cyclone and a second cyclonic cleaning stage **8** comprising a plurality of cyclones **9** in parallel. Dirty air may be introduced into first cyclonic cleaning stage **7** by any means known in the art. Referring to FIGS. **1** and **2**, vacuum cleaner **1** has a ground engaging head **2** having a dirty air inlet (not shown) which is in airflow communication with the first stage cyclone inlet **10**. The air travels through first cyclonic cleaning stage **7**, which is exemplified as comprising a single cyclone, and exits upwardly via first stage cyclone outlet **27**. The air travels upwardly to enter second stage cyclones **9** via second stage cyclone inlets **12**. The air travels through second stage cyclones **9** and exists second stage cyclones **9** via second stage cyclone outlets **13**. The treated air then travels downwardly via conduit **14** into the ground engaging head to a fluid flow motor that is preferably a suction motor **15** prior to exiting vacuum cleaner **1**.

[0275] Ground engaging head **2** may be of any construction known in the art and may include a rotating brush or the like to assist in entraining dirt in the dirty air inlet (not shown) in ground engaging head **2**. In addition, vacuum cleaner **1** may include an extension wand or the like for above the floor cleaning as is known in the art. It will also be appreciated that in an alternate embodiment, vacuum cleaner **1** may be a canister vacuum cleaner, a back pack vacuum cleaner, a carpet extractor, a wet/dry vacuum cleaner, or other vacuum cleaner or surface cleaning equipment utilized in household and commercial applications which may use a surface cleaning head (i.e. a head that may be used to clean a surface that may be a floor, wall, furniture or other surface as is known in the art), and which are preferably used in domestic applications and, in particular, indoor applications.

Combinations of Cyclones

[0276] In accordance with an aspect of the instant invention, which may be used individually or with any other aspect, a plurality of cyclonic cleaning stages and, preferably, a plurality of arrays of cyclones are provided. Preferably, such constructions are utilized to remove particulate matter in air, particularly in domestic applications, such as surface cleaning apparatus (e.g. vacuum cleaners, carper extractors and the like) and air cleaners (e.g., portable air cleaners or air cleaners connected to a furnace for a house). As shown in FIG. **2**, a vacuum cleaner may has a cyclonic cleaning unit **6** comprising a first cyclonic cleaning stage **7** comprising a single cyclone, a plurality of second stage cyclones **9** and a plurality of third stage cyclones positioned in pre-motor area **16** (e.g. an array **73** as shown in FIG. **8**).

[0277] It will be appreciated that in an alternate embodiment, the first cyclonic stage may comprise a plurality of cyclones in parallel. For example, a vacuum cleaner may comprise two cyclonic cleaning stages wherein each comprises a plurality of cyclones in parallel, preferably the first and second stages in order of fluid flow through the vacuum cleaner.

[0278] As a further example, suction or air flow motor **15** (e.g., a dirty air motor) may be positioned upstream from the cyclonic cleaning unit **6**, wherein unit **6** may contain 1, 2, 3 or 4 cyclonic cleaning stages. In accordance with this example, at least one, preferably a plurality of and, more preferably, all of the cyclonic cleaning stages comprise a plurality of cyclones in parallel.

[0279] Alternately, a cyclone cleaning stage may be provided upstream from motor **15** and a plurality of cyclonic cleaning stages (e.g. 2, 3 or 4), may be positioned downstream from the suction motor **15**. Some, and preferably a plurality of and, more preferably, all of the cyclonic cleaning stages comprise a plurality of cyclones in parallel.

[0280] Alternately, a plurality of cyclonic cleaning stages may be provided upstream from the motor and one or more cyclonic cleaning stages may be provided downstream from motor **15**. For example, two or three cyclonic cleaning stages may be positioned upstream from the motor **15** and one or two cyclonic cleaning stages may be positioned downstream from the motor **15**. Preferably, some, more preferably most and, most preferably all of the cyclonic cleaning stages comprise a plurality of cyclones in parallel.

[0281] In a particularly preferred embodiment, four cyclonic cleaning stages may be provided upstream from a motor **15** wherein at least one, preferably some and, most preferably all of the cyclonic cleaning stages comprise a plurality of cyclones in parallel.

[0282] Preferably, the cyclonic stages are provided exterior to each other (i.e., not nested). Therefore, they may be stacked (one on top of the other) or positioned side by side.

Construction of Cyclone Inlets

[0283] In accordance with another aspect, which may be used individually or with any other aspect, a cyclone separator **20** may have air inlet **21** that is located on the top of the separator **20**, see for example FIGS. **3**, **3***a* and **3***b*. The inlet **21** may be round, oval, square, rectangular, ellipsoid or any other shape in transverse section to the direction of flow, but a rectangular shape, as exemplified in the Figures, is preferred. The particle laden fluid represented by arrow **22** enters into the air inlet **21** and is directed by the spiral ramp **25** that defines inlet **21** so as to create cyclonic circulation **23** in cyclone separator **20**. The spiral ramp **25** can be configured to occupy an arc of from 10° to 360° of the perimeter of the circumference of the cyclone separator **20** as seen from above. Preferably, the spiral ramp **25** extends through an arc from 15 to 360° and, more preferably from 25° to 270° and, most preferably from 25° to 90°. In the embodiment of FIG. **3***a*, air or fluid inlet **21** extends through an arc of 90° and in the embodiment of FIG. **3***b*, air inlet extends through an arc of 270°. The spiral ramp **25** may be configured in either a clockwise or counterclockwise direction. As exemplified in the drawings, at least a portion of, and preferably all of, inlet **21** is positioned exterior to the cyclone chamber, which chamber is located inside cyclone separator **20**. For example, the inlet may be on the outer surface of cyclone separator **20** but is preferably positioned at the top of cyclone separator **20**.

[0284] Cyclonic circulation **23** in cyclone separator **20** causes at least a portion of the particles **24** within the particle laden fluid stream **22** to be disentrained from the fluid flow stream and accumulate within the lower region of the cyclone separator **20**. The fluid stream **26**, which exits the cyclone separator **20** through the fluid outlet **27** that is located adjacent to the inlet **21**, has a reduced concentration of the particles **24** than particle laden fluid stream **22**. It is understood that this construction can be applied to a single cyclone or a plurality of cyclones in parallel. In another embodiment, it will be appreciated that outlet **27** may be provided in the bottom of cyclone separator **20** or any other location known in the art.

[0285] An advantage of having the spiral ramp **25** occupy only a portion of the circumference of the cyclone separator **20** is that the inlet **21** can be more readily connected to air intakes, manifolds, or ducts which may lead from the floor engaging nozzle (e.g. a surface cleaning head), from another cyclone, a filter bag, a plurality of other cyclones, a fan, a pump or other pressure source, or from any other source of particle laden fluid.

[0286] Another advantage of this embodiment is that by reducing the arc of the inlet **21**, the volume of the inlet is reduced thereby effectively increasing the volume of a cyclone chamber. Accordingly, by using a spiral inlet that extends through an arc less than one full revolution, the volume of a cyclone separator **20**, and accordingly, the amount of dirt which may be contained in the separator **20** may be increased without increasing the outer dimension of the cyclone casing or the appliance in which the cyclone casing is provided. It will be appreciated that in surface cleaning appliances, such as vacuum cleaners and carpet extractors, air cleaners and the like, the foot print that the appliance may occupy is limited. Accordingly, in order to enhance the dirt retaining capacity of the appliance, it is preferred to maximize the available dirt collection area without increasing the volume of the appliance. It will be appreciated that in an alternate embodiment, the spiral inlet **21** that extends for less than a full revolution may be constructed in the side wall of a cyclone bin (see, e.g., FIG. **5**).

Internal Screen for a Cyclone Separator

[0287] In accordance with another aspect, which may be used individually or with any other aspect, an improved

internal screen for a cyclone separator **20** is provided, see for example FIG. **4**. In this alternative construction, a screen member **28** is preferably constructed from a fine mesh having a square area per opening or a hole of 0.000001 to 0.04 square inches. The screen openings or holes may be round, oval, triangular, square, pentagonal, heptagonal, or hexagonal or the like and are preferably multisided.

[**0288**] Alternately, or in addition, the screen **28** may comprise a central screen **28***a* and an outer perimeter screen **28***b* that has a longitudinal surface that is parallel to the cyclone outlet. The central screen **28***a* extends transversely to extend across the cross section of outer perimeter screen **28***b* so as to provide a complete screen surface extending between opposed parts of outer perimeter screen **28***b*. Central screen **28***a*, which is a transverse member, may be positioned at the lower terminal end **28'** of the outer perimeter screen **28***b* (to define a generally square U-shaped screen), towards the upper terminal end **28"** of the outer perimeter screen **28** but below the entrance to the fluid outlet (to define a generally square inverted U-shaped screen), or any position between the two, and preferably proximate the midpoint along the longitudinal length of outer perimeter screen **28***b* as exemplified (to define a generally H-shaped screen). It is preferred that the central screen **28***a* be positioned between the terminal ends of the outer perimeter screen **28***b* so as to form a capture region **29** interior of the outer perimeter screen **28***b* to assist in the entrapment of fibers, hairs or particles. Capture region **29** is a cavity interior of the longitudinal surface, namely outer perimeter screen **28***b*, that is open to the fluid in the cyclone separator without passing through the screen. It is understood that the cross sectional shape of the screen member **28** may be round, oval, square or any other shape.

[**0289**] As exemplified in FIGS. **2** and **4**, the cyclone separator **20** is generally vertically disposed, the outlet is provided in the top of the cyclone chamber, and the screen **28** comprises a longitudinally extending wall **28***b* constructed of a screen material (which is preferably circular in cross-section) and a transversely extending central screen **28***a* which is positioned interior of the longitudinally extending outer perimeter screen **28***b*, extends across the entire cross-section of the interior of the longitudinally extending outer perimeter screen **28***b* and between the opposed ends of the longitudinally extending outer perimeter screen **28***b* so as to create a shape which is generally H shaped in vertical section. Accordingly, air that has traveled through the cyclone chamber to the bottom of the cyclone casing will travel upwardly through the central portion of the cyclone and, preferably, enter the capture region **29** of the screen **28** (i.e., travel upwardly between the longitudinally extending outer perimeter screen **28***b*). The air will encounter central screen **28***a* and pass therethrough. If central screen **28***a* becomes clogged, then some or all of the air will commence traveling out the lower portion **132** of outer perimeter screen **28***b* and may then travel back inwardly through the upper portion **134** of outer perimeter screen **28***b* towards the centre of the cyclone chamber at a position above central screen **28***a* so as to travel to the cyclone outlet. Accordingly, the use of a generally H shaped screen in vertical section enhances the amount of screen area which may be utilized.

[**0290**] In accordance with an alternate preferred embodiment, the central screen **28***a* may be positioned adjacent the bottom of the outer perimeter screen **28***b* so as to create a screen, which in vertical section, comprises a generally square U shaped member. Accordingly, the air that is traveling through the cyclone chamber towards the cyclone outlet must travel through the screen material **28***a* or **28***b* to reach the cyclone outlet **27**. In accordance with this embodiment, the air may travel through the central screen **28***a* or the outer perimeter screen **28***b* so as to reach the cyclone outlet **27** thereby utilizing the enhanced surface area of the screen member **28**. Accordingly, fluid may travel back inwardly through the upper portion **134** of outer perimeter screen **28***b* towards the centre of the cyclone chamber at a position above central screen **28***a* so as to travel to the cyclone outlet.

[**0291**] In a further alternate embodiment, the central screen **28***a* may be positioned at the top end of the outer perimeter screen **28***b* so as to create in a vertical section a generally square inverted U shaped filter. Accordingly, in order to reach the cyclone outlet, the air may travel upwardly through the capture region **29** interior of outer perimeter screen **28***b* to reach the central screen **28***a* and to pass therethrough to the outlet **27**. Alternately, some of the air may travel through the outer perimeter screen **28***b* so as to reach the capture region **29** and to then travel upwardly to the cyclone outlet through the central screen **28***a*.

[**0292**] In accordance with a further embodiment of the instant invention, the outer perimeter screen **28***b* may flare outwardly in a direction away from the outlet. Accordingly, a portion of the outer perimeter screen **28***b* distal to the outlet **27** may have a diameter larger in cross section than the portion of the outer perimeter screen **28***b* adjacent to the outlet. One advantage of this design is that material that accumulates in the interior volume of the screen is more likely to fall downwardly to the bottom **31** of the cyclone casing when the air flow through the cyclone chamber is terminated. Accordingly, for example, if the cyclone is utilized as a cleaning stage in the surface cleaning apparatus or an air cleaner, the user may remove the dirt collection chamber of the cyclone bin (e.g. the cyclone casing itself may be removed if the bottom **31** of the cyclone casing defines the dirt collection chamber) permitting the dirt to flow out of the interior volume of the flared screen into the bottom of the cyclone casing. Alternately, if the screen **28** is removable, such as is disclosed herein, then the screen **28** may be removed permitting the dirt that has accumulated in the interior volume (capture region **29**) of the flared screen to fall to the bottom **31** of the cyclone casing. Alternately, the screen may be placed over a garbage can and banged against the side to loosen the dirt contained therein and permit the dirt to fall out of the flared capture region **29**.

[**0293**] It will be appreciated that transverse central screen **28***a* need not be perpendicular to the longitudinal axis of the outlet conduit **27**.

Removable Screen

[**0294**] In accordance with another aspect of the instant invention, which may be used individually or with any other aspect and, preferably, the screen construction disclosed herein, a cyclone separator **20** is provided with a screen **28** that covers all or a portion of the outlet **27** from the cyclone chamber and which is removable and, optionally, replacable. In accordance with this alternate preferred embodiment, the screen **28** is configured so as to be removable through or with the fluid outlet **27** of the cyclone chamber. For example, as exemplified in FIG. **4**, cyclone separator **20** has an outlet

conduit **27** that extends partially into the cyclone chamber and has a screen **28** attached or associated therewith. The screen may have the same diameter as the outlet conduit **27** or slightly less so as to be removable therethrough, or may be larger and removable with the outlet **27**. The outlet conduit **27** may be removably mounted to the cyclone casing, such as by a screw or bayonet mount. Accordingly, a user may remove the outlet **27**, and the screen **28** attached hereto by rotating the outlet conduit **27** and longitudinally withdrawing the outlet conduit **27** upwardly from the cyclone separator **20**. Accordingly, one advantage of this embodiment is that the screen is removably mounted in the cyclone chamber and may be easily removed to permit the cleaning of the screen. In particular, it is not necessary for a user to reach into a cyclone chamber so as to remove the screen or to clean elongate material, such as hair and other fibrous material, from the screen while the screen is mounted in the cyclone chamber.

[**0295**] A further advantage of the instant invention is that outlet conduit **27** may function as a handle for the screen. For example, if the outlet conduit **27** extends above the top of the cyclone separator **20**, the user may grasp the upper end of outlet conduit **27** and use that as a handle. Accordingly, the user need not touch the screen. Instead, the screen may be cleaned, by means of a brush and/or washing the screen under water. Once clean, the screen may be reinserted into the cyclone chamber without the user touching the screen. It will be appreciated that other means known in the art to secure the outlet conduit **27** and the cyclone separator **20** together may be utilized.

[**0296**] In addition, it will be appreciated that if the screen **28** has a larger diameter than the outlet conduit **27**, then the wall of the cyclone casing in which the outlet conduit **27** is provided will have a removable annular band **30** wherein the diameter of the removable annular band **30** is greater than the diameter of the screen **28**. Accordingly, when the annular band **30** is removed, an opening is provided in the outer wall **30***a* of the casing, which is sized to allow the passage therethrough of the screen **28** (see for example FIGS. **2***a* and **17**). Preferably, the annular band **30** forms a one piece assembly with the outlet conduit **27** and may be integrally molded therewith. Accordingly, only a single element needs to be removed from the cyclone casing in order to remove the screen for cleaning. Annular band **30** may be lockingly affixed to outer wall **30***a* by any means known in the art, such as by a bayonet mount, a screw mount, magnets or locking tabs.

[**0297**] In the embodiment of FIG. **2***a*, the first cyclonic cleaning stage includes a down flow conduit **14**. Down flow conduit **14** is collinear with the fluid outlet **27**, extends through the cyclone chamber **53** and has an upper portion **19** positioned above the top of the cyclone separator **20**. Accordingly, in this alternate embodiment, the down flow conduit **14** has an upper end **19** that forms the handle for the unit that is removed. As exemplified in FIG. **2***a*, a user may grasp end **19** and, e.g., rotate conduit **14** to unlock tab **148** from a recess, not shown, and then pull upwardly such that screen **28** is removed leaning an opening **144** in the top of the cyclone, through which dirt in the cyclone chamber **53** may be emptied.

[**0298**] If a second stage cyclonic stage **8** is mounted on top of the first cyclonic cleaning stage **7**, and the second cyclonic cleaning stage includes a down flow tube **138**, then the second cyclonic cleaning stage **8** is first removed. It will be appreciated that end **19** may have a gasket or O-ring **18** to seal down flow tube **138** of the second cyclonic cleaning stage **8** and the upper end **18** of down flow conduit **14** of the first cyclonic cleaning stage **7**.

[**0299**] In accordance with an alternate embodiment, it will be appreciated that the screen **28** may be permanently adhered to a screen mount (e.g. it may surround the outlet conduit **27** of a cyclone chamber and be disposable therewith). It will be appreciated that as used herein, a screen **28** comprises a material that preferably has a generally open pore size, which is selected to permit the passage therethrough of finer dirt material but to prevent the passage therethrough of elongate material. Accordingly, the screen does not filter particulate matter and does not substantially affect the back pressure of the air traveling therethrough when the screen is clean.

[**0300**] It will be appreciated that the cyclone outlet **27** may be provided at different positions in the cyclone casing and that the orientation of the screen in accordance with these embodiments may be accordingly adjusted so as to cover the outlet **27**. Further, transverse central screen **28***a* need not be perpendicular to the longitudinal axis of the outlet conduit **27**.

Geometry for a Cyclone Separator

[**0301**] In accordance with another aspect, which may be used individually or with any other aspect, an improved configuration for a cyclone separator **20** is provided, see for example FIG. **6**. In accordance with this embodiment, different geometries of cyclone separators **20** are provided. In particular, it is preferred that the geometry of a cyclone separator **20** is selected based on the size of cyclone separator **20**. According, it is preferred that for cyclone separators **20** that are greater than 1 inches in internal diameter (D), the geometry of the cyclone is as follows:

[**0302**] the inlet width (W) is preferably between D/3 and D/5,

[**0303**] the inlet height (H) is preferably between 2W to 5W, and

[**0304**] the height (h) above the floor or bottom **31** of the cyclone separator **20** is preferably greater than 2H, more preferably more than 4H and most preferably more than 8H.

[**0305**] If an optional plate **32** is employed, then:

[**0306**] the height (h) above the plate **32** is preferably greater than 2H, more preferably more than 4H and most preferably more than 8H;

[**0307**] the height (i) below the plate **32** is preferably greater than 1H, more preferably more than 2H and most preferably more than 4H; and,

[**0308**] the gap between the peripheral wall of plate **32** and the inner surface of the wall of the cyclone separator **20** is preferably 0.025" to 0.075", more preferably 0.035" to 0.050", and most preferably 0.040".

[**0309**] Alternately, it is preferred that for cyclone separators **20** that are equal to or smaller than 1 inch in internal diameter (D), the geometry of the cyclone is as follows:

[0310] the inlet width (W) is preferably between D/5 and D/15 and more preferably D/8 to D/12;

[0311] the inlet height (H) is preferably between 2W to 5W and preferably 3W to 4W; and,

[0312] the height (h) above the floor or bottom **31** of the cyclone separator **20** is preferably greater than 2H, more preferably more than 4H and most preferably more than 8H.

[0313] If an optional plate **32** is employed, then:

[0314] the height (h) above the plate **32** is preferably greater than 2H, more preferably more than 4H and most preferably more than 8H;

[0315] the height (i) below the plate **32** is preferably greater than 1H, more preferably more than 2H and most preferably more than 4H; and,

[0316] the gap between the peripheral wall of plate **32** and the inner surface of the wall of the cyclone separator **20** is preferably 1W to W/10, more preferably W/1.5 to W/4 and most preferably W/2 to W/3.

[0317] It is understood that for cyclones separators **20** between 0.75" and 1.5 inches in diameter, good but not optimal performance can be achieved by applying the parameters for cyclone separators **20** smaller or larger than 1 inch in diameter.

Configuration of a Divider Plate for Cyclone Separators

[0318] In accordance with another aspect, which may be used individually or with any other aspect, improved configurations for a plate **32** that is included in a cyclone separator **20** to divide the interior of a cyclone separator **20** into a cyclonic region or cyclone chamber **53** and a dirt collection region or chamber are provided, see for example FIG. **6***a*. As illustrated therein, plate **32** has an upper or cyclone chamber surface **32***a*, a lower or dirt collection chamber surface **32***b* and a peripheral wall **32***c*. Each of these different configurations beneficially assist in capturing different particle sizes. For example, the peripheral wall **32***c* of plate **33** is flat (i.e. it may extend generally vertically). Plate **33** is preferred for use in a cyclone separator **20** to capture general particles found in carpets and homes where the particle size is 3 or more microns. Alternately, the peripheral wall **32***c* may meet upper and/or lower surfaces **32***a*, **32***b* at an angle. See for example plates **34**, **35** and **36**. As shown, plate **35** comprises an upper portion and a lower portion that intersect at an intermediate location along the thickness of the plate so as to define a sharp edge (e.g. it is generally V shaped). As the size of the particles decreases, plates **33**, **34** and **35** are more effective in that the discontinuity at the outer perimeter improves ultra fine particle separation. Alternately, the peripheral edge may be curved (e.g. it may bow out in the centre so as to be generally C shaped as shown in plate **37**). When the specific gravity of the particles being removed from the fluid stream is similar to the specific gravity of the fluid, curved surfaces such as **37**, **38**, **39**, **40**, and **41** tend to provide more efficient separation.

[0319] It has also been found that for mixtures including a wide range of particle specific gravities, creating regular or irregular, symmetrical or non-symmetrical curves or angled discontinuous surfaces on the upper surface **32***a* of the plate **32**, i.e. the face disposed towards the cyclone chamber, can enhance separation efficiency. Examples are shown in FIGS. **6***b* and **6***c*. In the example of FIG. **6***b*, a discontinuity **42***a* curves upwardly from upper surface **32***a* and a discontinuity **42***b* curves downwardly into upper surface **32***a*. In the example of FIG. **6***c*, a discontinuity **43***a* is angled upwardly from upper surface **32***a* and a discontinuity **42***b* is angled downwardly into upper surface **32***a*.

[0320] While plate **32** may be mounted transverse to the longitudinal axis of a cyclone separator **20** (e.g., if cyclone separator extends vertically, plate **32** extends horizontally), it will be appreciated that in an alternate embodiment that plate **32** may be other than in a plane transverse to the longitudinal axis of a cyclone separator **20**. For example, as shown in FIG. **6***d*, the plate **44** is mounted on an angle relative to the wall **45** of the cyclone separator **20**. It is understood that the cyclone separator wall **45** may optionally be curved or angled towards the top or towards the bottom of the cyclone separator **20**.

[0321] In accordance with a further alternate embodiment of the instant invention, the plate **32**, which may be of any particular configuration and/or one of the configurations disclosed herein, may be positioned so as to define an annular gap between the peripheral wall of the plate **32***c* and the inner surface of wall **45** of the cyclone casing that is not uniform in thickness. For example, the plate **32** may be closer to the wall **45**, or may touch the wall **45**, at one or more locations or along in an arc of the wall **45**. Alternately, or in addition, the plate **32** may be angled, as shown in FIG. **6***d*, such that one end is at an elevated distance above the bottom **31** of the cyclone casing compared to an opposed end. Accordingly, if the plate **32** is circular and centrally positioned, the annular gap at the raised end and the lower end will be larger than at the central portion that is not vertically displaced. Alternately, the plate **32** may be angled upwardly from adjacent one arc of wall **45**. Alternately, or in addition, it will be appreciated that the plate need not be circular in cross section. Instead, the plate may have an irregular outer surface so as to provide variation in the gap between the peripheral wall **32***c* of the plate and the inner surface of wall **45** of the cyclone casing.

[0322] It will be appreciated that in one embodiment, the plate **32** may be secured to the bottom **31** of a cyclone casing. Alternately, the plate **32** may be attached to inner surface **56** of the wall **45** of the cyclone casing (see for example FIGS. **6***g* and **6***h*).

[0323] In an alternate embodiment, instead of a plate **32**, the central portion e.g., **27***e* of FIG. **7***d* and **55** of FIG. **7**, of the bottom **31** of the cyclone casing may be raised inwardly so as to define a plateau. The raised floor **55** may have a continuous wall, e.g., **27***b* of FIG. **7***d*, which extends downwardly adjacent the periphery of the raised floor **27***e* so as to define a side wall, which may be generally vertical, and which extends upwardly from the floor **52***a* of the cyclone bin to the raised floor **27***e*. Alternately, the side wall **27***b* may be recessed underneath the raised floor. The side wall may have any of the configurations referred to above for the peripheral edge **32***c* of a plate **32**. In addition, the raised floor a may be circular in cross section. However, the cross section of the floor may be varied so as to define a variable annular gap between the side wall and the inner surface **56** of the wall **45** of the cyclone casing.

Positioning of a Divider Plate for Cyclone Separators

[0324] In accordance with another aspect, which may be used individually or with any other aspect, a passage, all or a portion of which extends outwardly, is preferably provided for connecting the cyclone chamber **53** in communication with the dirt collection chamber **52**. Preferably, as shown in FIGS. **2** and **6***e,* the cyclone chamber includes a fluid outlet **27**, which has a lower end that may comprise an entrance **27***a* to the fluid outlet **27**, which is positioned above plate **32**. The entrance to fluid inlet **27** may be covered by a screen, such as screen **28**. The gap between plate **32**, and the lower extent of fluid outlet **27**, or screen **28** if provided, may be greater than 0.5", preferably greater than 1" and, more preferably greater than 2". In any such embodiment, the lower extent of fluid outlet **27** is preferably positioned below the bottom of cyclone inlet **21**. The passage defines a vertical annular gap that has a height that may be less than 2" and, preferably less than 1". In any embodiment, the height may be less than ⅓, preferably less than ⅙, more preferably less than 1/10 and, most preferably less than 1/20 the diameter of the cyclone immediately below the bottom of the cyclone inlet **21**.

[0325] It will be appreciated that the passage may be produced in several ways. For example, the outer circumference of the cyclone casing may be increased proximate to the height of the raised floor so as to create an outer annular region which functions as a dirt collection chamber. An example of such a construction is shown in FIG. **7** wherein a passage **61** having a vertical annular gap g and a length RO is positioned between the raised bottom wall **55** and the laterally extending wall **59***b* of the cyclone separator **20**. In this embodiment the plate (raised floor **55**) is formed by a step in the floor **59***a* of the cyclone separator **20**.

[0326] An alternative construction is shown in FIG. **7***a* wherein the passage **61** having the vertical annular gap g is formed between the plate **54** and the wall **59***b* of the cyclone separator **20**. The plate may be a molded or formed part and the gap (g) is formed between the plate **54** and the wall **59***b* of the cyclone separator **20** wherein plate **54** may be affixed to the wall **57***a* by support arms **58** extending inwardly from wall **57***a* or affixed to an optional screen member (not shown) which would be affixed or removably affixed to or mounted to, e.g., wall **57***a,* wall **45**, the top of the cyclone, or a combination thereof. The plate **54** may optionally be held in place by magnets or other means described elsewhere herein.

[0327] Another alternative construction is shown in FIG. **7***b* wherein the passage **61** having a vertical annular gap g is formed between the raised bottom **55** and the wall **59***b* of the cyclone separator **20**. A particle collection region **62** is formed in the annular space between the wall **59** and the wall **60**. One advantage of this design is that the cyclone may be oriented with its longitudinal axis extending horizontally so that particulate matter may accumulate in collection region **62**.

[0328] Another alternative construction for a plate **32** is shown in FIG. **7***c* wherein the passage **61** having a vertical annular gap g is formed between the plate **63** and the airflow redirector ring **64** of the cyclone separator **20**. In this embodiment the plate comprises a disc attached, e.g., to the cyclone separator floor **59** of the cyclone separator **20**. A particle collection region is marked **66**. The airflow redirector ring creates and angle (A) with the wall **65** of, preferably, between 15° to 75° and, more preferably, 30° to 60° and most preferably 40° to 50°. It is understood that the airflow redirector ring **64** can take different geometries including those illustrated as **67**, **68**, **69**, **70**, **71** or **72**.

[0329] Another alternative construction for a cyclone and dirt collection region is shown in FIG. **7***d* wherein the air exits from the end of the cyclone opposed to the end of the cyclone separator **20** having inlet **21**. If the cyclone separator is vertically aligned, then the air enters the cyclone through an inlet air inlet **21** that is located on the top of the cyclone separator **20**. The cyclonic circulation **23** causes at least a portion of the particles **24** within the particle laden fluid stream **22** to become removed and trapped within the collection region **66***a* of the cyclone separator **20**. The fluid stream **26** which exits the cyclone through the outlet or entrance **27***a* to down flow tube **27***c* located in the bottom of the cyclone separator **20** at the end opposite to the inlet **21**. Thus, a portion of the particles **24** originally entrained in the particle laden fluid **21** are removed. In this embodiment, the air travels down flow director **64***a* and then travel downwardly towards laterally extending wall **27***e.* The air then travels outwardly in the passage **61** between flow director **64***a* and lateral wall **27***e* that has a vertical annular gap g**2**.

[0330] The passage may have a height that is less than ⅓ the diameter, preferably, less than ⅙ the diameter, more preferably less than 1/10 the diameter and most preferably less than 1/20 the diameter. Accordingly, the height may be 2 inches or less and preferably 1 inch or less. In a particularly preferred embodiment, preferably, the height of the gap (g) is 0.015" to 0.250" for cyclones larger than 1 inch in diameter D, especially for use in vacuum cleaners. A radial overlap (RO) that defines the length of the passage **61** is defined by the overlap of the raised bottom floor or plate and the outwardly extending portion **59***b* of wall **59** of the cyclone separator and/or the flow director. Preferably, this radial overlap is 0.015" to 0.250" for cyclones larger than 1 inch in diameter D. Preferably, the height of the gap (g) is 0.002" to 0.040" for cyclones smaller than 1 inch in diameter D, and raised bottom floor **55** extends outwardly to extend slightly underneath the lower portion **59***b* of wall **59**. More preferably the radial overlap between the lower portion **59***b* of wall **59** and the outer radial edge of the raised floor **55** is 0.005" to 0.125" for cyclones equal to or smaller than smaller than 1 inch in diameter D. In an alternate embodiment exemplified in FIG. **7***d,* it has been found that the gap g**2** is preferably 0.025" to 0.075" for cyclones greater than one inch in diameter D for collecting particles between 4 and 100 microns in size. It has been found that the gap g**2** is preferably 0.025" to 0.075" for cyclones greater than one inch in diameter D for collecting particles between 4 and 100 microns in size. It has been found that the gap g**2** is preferably 0.005" to 0.040" for cyclones smaller greater than one inch in diameter D for collecting particles between 0.1 and 10 microns in size, and more preferably 0.015" to 0.025".

[0331] It is also understood that the dimensions of the gap (g) and the radial overlap may be varied around the perimeter of the raised bottom wall **55** to create conditions which are optimal for the collection of a band of particle sizes or particle densities.

[0332] The distance between the floor of the dirt collection region and the bottom of flow director **64***a* is preferably not

less than the height of the inlet H2 and the height of section **27***c* is preferably greater than 2H, more preferably 4H and most preferably greater than 8H and the gap g3 between the bottom of the inlet **21** and the top of the down flow tube section **27***c* is preferably 0.5H2 to 1.5H2, and more preferably approximately 0.9H2. The internal area of the down flow tube **27***c* is preferably at least equal to the area of the spiral inlet **21** and more preferably is 1.5 to 2.5 times larger than the area of the spiral inlet **21**. This cyclone design may optionally incorporate an airflow redirector **64***a,* which may be shaped as **67**, **68**, **69**, **70**, **71** or **72** or any similar shape, which creates a barrier to the re-entrainment of particles **24** captured in the region **66***a.*

[**0333**] The height of the gap (g2) is preferably 0.002" to 0.040" for cyclones smaller than 1 inch in diameter D, and the radial overlap RO2 between the airflow redirector ring **64***a* and the edge of the down flow tube **27***b* is preferably 0.005" to 0.125" for cyclones equal to or smaller than smaller than 1 inch in diameter D. It is also understood that the dimensions of the gap (g2) and the radial overlap (RO2) may be varied around the perimeter of the down flow tube **27***b* to create conditions which are optimal for the collection of a band of particle sizes or particle densities.

[**0334**] In alternate embodiments, a cyclone separator **20** having a passage **61** may be used as a particle filter in the outlet conduit from a combustion chamber, preferably downstream from the outlet of a wood stove, a furnace, a car engine and a producer gas unit (partial oxidation reactor).

Moveable Divider Plates for a Cyclone Separator

[**0335**] In accordance with another aspect, which may be used individually or with any other aspect, it is understood that plate **32** may be permanently, removably, translatably or pivotally affixed in cyclone separator **20**, such as by being permanently, removably, translatably or pivotally affixed to screen **28** or side wall **45**.

[**0336**] The plate **32** may be held in position by means of magnets and or magnets may be used to assist in particle capture. For example, the plate **32** may have one or more magnets provided thereon and positioning magnets may be provided over and/or below the plate **32** wherein the faces of the positioning magnets that face the plate **32** have the same polarity as the faces of the magnet or magnets on plate **32** which are spaced from but facing the positioning magnets. Accordingly, the plate **32** may be held in place by magnetic repulsion. Alternately, it will be appreciated that the plate may be held in position by magnetic attraction.

[**0337**] FIG. **6***e* exemplifies a construction wherein a plate magnet **46** is affixed to or embedded within the plate **47** and is magnetically suspended between the positioning magnets **48** and **49** by means of magnetic repulsion. The magnet **49** may be affixed to or embedded within the floor **50** of the cyclone separator **20**. One advantage of this construction is that the magnets **46**, **47**, **48** and **49** create a magnetic field within the cyclone chamber to enhance the collection of magnetic and paramagnetic particles.

[**0338**] If the floor **50** is removable or moveable (e.g. pivotally mounted such as by pivot hinge **50***a* as shown in FIG. **2***a*), then when dirt collection chamber **52** is opened (e.g. floor is pivoted open), the plate **47** could be removed (e.g., if it is not attached by any means to the cyclone separator it would fall out) or if it is mechanically retained (not shown) it could be translated some distance either vertically, laterally, or both to facilitate the removal of particles collected both in the cyclone chamber **51** above plate **47** and in the dirt collection region **52** below plate **47**.

[**0339**] Similarly, if upper positioning magnet **48** is associated with a screen (not shown), such as by being affixed thereto or embedded therein, and the screen is removed through or with the outlet **27**, plate **47** could be removed or if it is mechanically retained (not shown) it could be translated some distance either vertically, laterally, or both to facilitate the remove of particles collected both in the main collection region **51** and in the dirt collection region **52**. Alternately, plate **32** may be moveable when a door, e.g., a bottom opening door **50**, is pivoted open about, e.g. pivot hinges **50***a*. Accordingly, plate **32** may be secured to inner surface **56** of wall **45** of the dirt collection chamber **52** by any means known in the art, such as by a pivot hinge **158** (see for example FIGS. **6***g* and **6***h*). Plate **32** may be supported in a generally horizontal, or other desired, position by a column **160** extending upwardly from door **50**. When door **50** is opened, such as by pushing button to move lever **164** outwardly and release the engagement of flange **166**, and which may be by any means known in the art, plate **132** may pivot down, e.g., to a position generally parallel to or, as exemplified, inclined with respect to the axis of the cyclone separator.

[**0340**] It is understood that the plate **47** may be any type of plate including but not limited to those described in FIG. **6**, **6***a,* **6***b,* **6***c* and **6***d.* It is also understood that this configuration may be employed with any top inlet or a side wall inlet cyclone geometry. It is understood that magnetic attraction to another magnet or to a magnetically permeable material such as steel may also be used to movably or removably fix the plate **47** in position. It is also understood that a single positioning magnet may be used to produce a repulsive or attractive force to force the plate **47** against a fixed, movable or removable stop thereby permanently, movably or removably fixing the plate into position. An advantage of magnetic mounting is that the translation of the plate **47** to facilitate the removal of trapped particles makes cleaning such a unit much easier.

Magnetic Separation

[**0341**] In accordance with another aspect, which may be used individually or with any other aspect, one or more magnets may be provided in an air flow passage so as to assist in attracting and retaining metallic and paramagnetic particles. For example, one or more magnets may be provided adjacent the inlet or outlet, or inside the inlet or outlet, of a cyclone. Alternately, or in addition, it will be appreciated that one or more magnets may be provided at any desired location inside a cyclone chamber, or exterior to a cyclone chamber or air flow passage, provided that the magnetic field extends inside the cyclone chamber or air flow passage.

[**0342**] In accordance with another embodiment of the instant invention, one or more magnets may be removably attached to the plate **47**, the cyclone separator **20** and/or an air flow passage. When the magnet is removed, magnetic particles that have accumulated may fall off any surface to which they are adhered by magnetic force and/or may be removed by mechanical means. Accordingly, removal of the magnet assists in cleaning the cyclone separator.

[0343] For example, as exemplified in FIG. **6***f*, a cyclone separator **20** has a magnet **49***a* affixed to the floor **50**, and optionally to the wall, (not shown) to assist in the collection of metallic and magnetic particles wherein the magnet **49***a* can be translated away from or removed from the floor **50** thereby eliminating the magnetic influence and allowing the particles captured in the cyclone separator **20** to be easily removed by either removing the floor **50** or by removing the inlet/outlet elements and pouring the contents of the cyclone.

Cyclone Separator Arrays

[0344] In accordance with another aspect, which may be used individually or with any other aspect, an array of cyclones is provided. Referring to FIG. **8***a* plurality of parallel cyclones **73** is provided, which may be of any construction know in the art or described elsewhere in this specification, and preferably are designed and configured to create a high separation efficiency and a high airflow rate with a minimum back-pressure. Preferably, the array comprises a large number of cyclones **73** in parallel. In particular, the array may comprises more than 1 cyclone per square inch, preferably more than 4 cyclones per square inch, more preferably 9 or more cyclones per square inch such that high airflow rates and high separation efficiencies for very small particles can be achieved. If the array is designed to separate particles smaller than 1 micron, the use of cyclone densities of 9 to 64 cyclones per square inch is preferred. Such arrays may be useful as a pre and/or post motor filter in a vacuum cleaner or in a breathing mask. For example, such an array may be positioned in the pre-motor area **16** (see FIG. **2**).

[0345] Alternately, or in addition, an array of cyclones may be of various constructions to increase the compactness of the cyclone array or to increase the efficiency of the cyclone array. As exemplified in the embodiment of FIG. **8***a*, the construction of a cyclone array may employ a common wall between some and preferably all of the cyclones as shown in FIG. **8***a* where three cyclones **74**, **75** and **76** within the array **73** are shown with a portion of their walls overlapping in areas **77** and **78** to allow a very compact geometry. Alternately, or in addition, the construction of a cyclone array **73** can employ a touching wall between some, and preferably all, of the cyclones. An example is shown in FIG. **8***b* where three cyclones **79**, **80** and **81** are positioned with their walls touching at positions **82** and **83**, which creates a stronger construction with fewer cyclones. Alternately, or in addition, the construction of a cyclone array **73** may employ spaced apart cyclone walls as shown in FIG. **8***c* where the cyclones **84**, **85**, **86**, **87**, and **88** are spaced apart which makes them easier to mold. An advantage of spacing the cyclones apart is that the space between the cyclones **84**, **85**, **86**, **87**, and **88** may form a region **89** where further particle collection can occur as the air travels (e.g., "spins") to enter the cyclonic inlets of each individual cyclone (e.g., if a manifold is provided which covers all of the cyclone inlets) as opposed to each inlet being connected directly to a fluid flow conduit. If the common floor **90** between the cyclones **84**, **85** and the others from FIG. **8** is moved to the bottom of the cyclones **91**, the capacity of the annular space **89** for the collection of fine particles will be increased. Preferably, the cyclone arrays described in FIGS. **8**, **8***a*, **8***b*, **8***c* and **8***d* are constructed using one or more of the configurations described in FIGS. **7**, **7***a*, **7***b*, **7***c*, and **7***d*.

[0346] If an array of cyclones is provided, then the cyclones are preferably cleaned by passing water therethrough. Accordingly, at least one water port may be provided to permit water to enter or exit the cyclone array. For example, as shown in FIG. **16**, water inlet port **114** may be provided with a closable cap, or other closure member, **116**. Water inlet port **114** is preferably provided on top surface **108** and is in communication with the fluid flow passage leading to the cyclones (e.g., the dirty air flow passage in a vacuum cleaner extending to the cyclone inlets). The inlets preferably are downstream from a header **130** and the water inlet port **114** is provided in the header. When cap **116** is open, a user may pour water into port **114**. The water will flow through a passage to the cyclones. The user may then use handle **118** to move away, e.g., in a swirling motion. Thereafter, the water may be drained, e.g., by pushing button **122** that moves lever outwardly so that bottom door **120** pivots open to permit water and suspended dirt to be removed by passing downwardly out of bottom of stage cyclones **9** (see for example FIG. **20**).

[0347] In accordance with this aspect, a plurality of cyclones in parallel may be provided wherein the cyclones have at least two dirt collection chambers, wherein the at least two dirt collection chambers are emptied at the same time. For example, the dirt collection chambers may have a common bottom **120** that is openable. Preferably, as exemplified in FIG. **20**, each cyclone has a dirt collection chamber and all of the dirt collections chambers have a single common door so that, by opening a single door, all of the chambers are emptied at the same time. For example, in the embodiment of any of FIGS. **9**, **9***a*, **10**, **11**, **11***a*, **12**, **13**, **14**, the bottom **120** (not shown) may be pivotally mounted to peripheral wall **92** such that all cyclones are emptied concurrently.

[0348] The surface cleaning apparatus may have two cleaning stages wherein one of the stages, preferably the second, comprises a plurality of cyclones in parallel. The other cleaning stage, preferably the first cleaning stage may be any filtration or dirt collection member known in the art. It will be appreciated that, in another aspect, the surface cleaning apparatus may have only one cyclonic cleaning stage comprising a plurality of cyclones in parallel wherein the plurality of cyclones are removable as a unit, preferably with the associated dirt collection chamber or chambers.

[0349] In accordance with this aspect, it is preferred that two cyclonic stages are provided wherein at least one comprises a plurality of cyclones in parallel and the stages are emptied separately. For example, as shown in FIG. **17**, second cyclonic cleaning stage **8**, which comprises a plurality of cyclones in parallel, may be removed from vacuum cleaner **1** while the first stage cyclone **7** is retained in position in vacuum cleaner **1**. The second cyclonic cleaning stage may be slidably mounted on flanges **126** that are received in L-shaped members **128** that are provided on the bottom panel of the stage **8**, which is preferably a pivoting door **120**. Accordingly, when second cyclonic cleaning stage **8** is removed, e.g., slide in the direction of arrow A, it may be carried to a garbage can, button **122** pressed and door **120** opened so that the second stage cyclones **9** may be emptied. Any locking member known in the art may be used to secure second cyclonic cleaning stage **8** in position on the vacuum cleaner and to connect the cyclone array **156** in air flow communication with the respective passages in the surface

cleaning apparatus. For example, the cyclone array may be sealed in position by means of angled seals, a lifter mechanism or other sealing means known in the art. It will be appreciated that this design may be used if the vacuum cleaner only has one cyclonic cleaning stage.

[0350] Alternately, as shown in FIGS. **18** and **19**, first and second cyclonic stages **7**, **8** may be removed at the same time from the vacuum cleaner **1**. Cyclonic stage **7** may then be emptied, e.g., by opening a bottom pivoting door **50**. The cyclonic stages **7**, **8** may first, or subsequently, be separated, such as by rotating cyclonic stage **8** relative to cyclonic stage **7** in the direction of arrow B as shown in FIG. **19**. The second stage **8** may then be emptied. It will be appreciated that stages **7** and **9** may be emptied in any particular manner known in the art, such as by a bottom pivoting door or the dirt collection chamber being removed from the cyclone chamber.

[0351] In accordance with this aspect of the invention, it is preferred that the cyclone array is removed as a sealed unit, other than the other than fluid flow passages leading to and from the cyclones. For example, as shown in FIG. **2**, air that exits the first stage cyclone **7** travels upwardly from outlet **27**, through opening **150** in bottom **120** to one or more openings **148** in the bottom of second cyclonic cleaning stage **8** (See FIG. **20**) that are upstream of header **130** and are connected thereto by a conduit. The air travels through the cyclones **9** and exits second cyclones **9** via outlets **13** to header **136** and then to down flow tube **138**, which is upstream of conduit **14** and exits second cyclonic stage **8** via opening **152** in bottom **120**. Thus, when second stage **8** is removed from the vacuum cleaner and/or the first stage, second stage **8** is sealed, other then the one or more openings in the bottom of second cyclonic cleaning stage **8** and the bottom **140** of down flow tube **138**. The array may have a filter that is removable therewith.

[0352] Another removal method is exemplified in accordance with the embodiment of FIGS. **20** and **21**, wherein housing **154** of second cyclonic stage **8** is pivotally mounted to bottom **120** and, when opened, cyclone array **156** may be pulled downwardly out of housing **154** for emptying. Alternately, it will be appreciated that the top of housing **154** may pivot upwardly or otherwise open to permit cyclone array **156** to be pulled upwardly out of housing **154**. It will be appreciated that, if the cyclone array **156** is preferably a sealed unit, then a bottom opening panel, with holes aligned with conduits **138** and **146**, may be provided. In an alternate embodiment, the housing **154** may pivot upwardly leaving cyclone array **156** in position on top of the first stage cyclone **7** (or other filtration member or housing member). A consumer may then pick up cyclone array **156**, such as by a handle, and remove it for emptying. It will be appreciated that this design may be used if the vacuum cleaner only has one cyclonic cleaning stage.

Transfer of Material between Cyclone Stages

[0353] In accordance with another aspect, which may be used individually or with any other aspect, a plurality of cyclones are configured such that material that is disentrained by one cyclone is conveyed to another cyclone by introducing the separated material into the fluid flow stream that travels to the other cyclone. An example of such an arrangement is shown in FIG. **15**. As shown therein, a fluid flow duct **1501** branches into ducts **1502** and **1503**, which in turn lead to cyclones **1504** and **1505**. The fluid flowing within duct **1501** continuously or periodically contains one or more types of particles or other materials **1512** which are desired to be removed from the fluid flow stream. The cyclone separators **1504** or **1505**, may be any cyclone separators or combination of cyclone separators known in the art, or any individual cyclone design or combination of cyclones described within this specification including but not limited to top inlet cyclones, side wall inlet cyclones, bottom inlet inverted cyclones and cyclones with plates. Optionally, the particles **1512** collected in the cyclone separator **1504** are continuously or periodically transferred into the ducts **1501** and/or **1503** by means **1514** so that over time most of the particles are collected in cyclone **1505** other than those which pass to an optional particle separation member **1510** due to the efficiency limitations of cyclones **1505** and **1504**. Optionally, the air outlet **1506** from cyclone **1504** passes through duct **1507** to the optional particle separation member **1510**, which is adjacent to the suction source **1511**.

[0354] One advantage of this configuration is that, when used, e.g., in a vacuum cleaner, the transfer of particles from cyclone **1504** to cyclone **1505** allows the user to empty a single container, which simplifies emptying the vacuum cleaner.

[0355] In an alternate embodiment, material collected may be conveyed to container **1513**. This container **1513** may be reusable or disposable, made of one or more organic or inorganic polymers, rubber, plastic, paper, cardboard, glass or metal, or any combination thereof, and be in the form of a bag, box, bottle, jar, bin or any other closed or semi closed form for easy disposal of the particles or transfer of the particles for other uses or operations. Accordingly, an advantage of this alternate embodiment is that a single automated mechanism may be used to continuously or periodically transfer the collected particles **1512** into a container **1513** as controlled by particle transfer means **1515**.

[0356] It is understood that the container **1513** could optionally be fully or partially closed or sealed by the action of the user or optionally be automatically partially or fully closed or sealed by the mechanism of the system when the user initiates or carries out the release or removal of the container **1513**. The container **1513** is preferably designed to contain most or all of the particles **1512**. It is understood that the container **1513** or a portion of the container **1513** need not be gas or liquid tight but that it may be porous or contain a porous area or member which may optionally facilitate the entry and or exit of fluids, to optionally facilitate the disinfection of the container **1513** and/or its contents by the use of chlorine gas, ozone gas, pure oxygen or other agents, to optionally facilitate the compacting of the container **1513** and/or its contents by allowing gases to escape, and/or facilitates the container **1513** and/or its contents to biodegrade.

[0357] The particle transfer means **1514** may consist of a door mechanism which periodically opens to allow the particles to fall into a region from which the particles **1512** are drawn into ducts **1501** and/or **1503**, during which time the suction source **1511** may either be turned off or its influence on cyclone separator **1504** interrupted such as by a valve **1516**. The particle transfer means **1514** may alternately comprise a rotating member similar to a revolving door disposed vertically, horizontally, or at any angle which

continuously or periodically transfers particles **1512** into a region from which the particles are conveyed by gravity or conveyed by means of a mechanism such as a screw or plunger into the duct member **1501** and/or **1503** by means of the duct members **1518** and **1517** respectively during which time the suction source **1511** may either be turned off or its influence on cyclone separator **1504** may optionally be interrupted by an optional member such as a valve **1516**.

[**0358**] The particle transfer means **1515** may be the same as or different from particle transfer means **1514** transferring particles **1512** to container **1513** by means of the duct member **1519** during which time the suction source **1511** may either be turned off or its influence on cyclone separator **1505** may be optionally interrupted by an optional member such as a valve **1520**.

[**0359**] The particle transfer means **1514** and **1515** may alternately each comprise a door that opens and closes periodically or by the action of the user, a vibratory plate, or a vibratory plate in combination with a valve or door.

[**0360**] It is understood that the operation of transferring the particles from cyclones **1504** and **1505** may be continuously actuated; automatically actuated on a periodic basis; actuated or halted in response to a particle level within the cyclones or within the container **1513**; actuated in response to a sensor; actuated by the interaction of the user with the system such as attempting the removal of the cyclone **1505**; the optional container **1513**, or by the powering up or powering down of the system, or by a combination of one or more of these methods.

[**0361**] It is also understood that this invention can be applied to groups or arrays of cyclones wherein **1504** and **1505** represent a plurality of cyclones in parallel rather than a single cyclone.

[**0362**] It is understood that the optional particle separation member **1510** may be a cyclone, a plurality of parallel cyclones, two or more cyclones connected in series, two or more cyclonic stages wherein each cyclonic stage comprises a plurality of cyclones in parallel, two or more cyclonic stages wherein each cyclonic stage comprises a plurality of cyclones in parallel and each individual cyclone in an upstream array of cyclones in parallel is in series fluid flow communication with a single cyclone of the downstream array of cyclones in parallel, two or more cyclonic stages wherein each cyclonic stage comprises a plurality of cyclones in parallel and each individual cyclone in an upstream array of cyclones in parallel is in series fluid flow communication with more than one cyclone of the downstream array of cyclones in parallel (e.g. preferably two), two or more cyclonic stages wherein each cyclonic stage comprises a plurality of cyclones in parallel and each individual cyclone in an upstream array of cyclones in parallel is in series fluid flow communication with a manifold which feeds at least one cyclone of the downstream stage, a fibrous filter media, a fibrous media with an adhesive or surface treatment applied to aid in fine particle capture or retention, or a liquid bath through which the fluid stream must pass.

[**0363**] It is also understood that the optional particle separation member **1510** may be physically adjacent to the suction source **1511** or that it may be connected to the suction source **1511** by means of a duct or passage way, which may include one or more bends. It is also understood that the outlet of the cyclones may be through the bottom or side wall of the cyclone, or a combination thereof. It is also understood that the fluid flow **1501** may come from a floor nozzle of a vacuum cleaner or other floor cleaning device, from the wand or hose of a vacuum cleaner or other cleaning device, from the air in a room, from a fluid wherein one or more particles sizes or types is to be separated, from another source similar to those described above with reference to optional particle separation member **1510** or from a liquid bath through which the fluid stream must pass.

[**0364**] An alternate embodiment of a plurality of cyclones that are configured such that material that is disentrained by one cyclone is conveyed to another cyclone by introducing the separated material into the fluid flow stream that travels to the other cyclone is exemplified in FIG. **15***a*. FIG. **15***a* shows a fluid flow duct **1501**, which leads to cyclone separator **1505**. The fluid flowing within duct **1501** continuously or periodically contains one or more types of particles or other materials **1512** which it is desired be removed from said fluid flow stream. The cyclone separator **1504** may be designed to capture finer particles more efficiently as it is in series with and downstream of cyclone separator **1505**.

[**0365**] The particles **1512** collected in the cyclone separator **1504** are continuously or periodically transferred by means **1514** into the duct **1501** so that over time more of the particles collect in cyclone **1505**.

[**0366**] The particle transfer means **1514** operates exactly as described with respect to FIG. **15** except that it only feeds into fluid flow duct **1501** by means of duct member **1518**. The particle transfer means **1515** operates exactly as described with respect to FIG. **15** except that in operation valve **1516** would be used to optionally disrupt the influence of suction source **1516** on cyclone **1505** as the cyclones **1504**, **1505** are in series.

[**0367**] The air outlet **1506** from cyclone **1504** passes through duct **1507** to the optional particle separation member **1510**, which is adjacent to the suction source **1511**. It is also understood that an optional particle separation member **1510***a*, which is adjacent to the outlet of the suction source **1511** can also be provided. It is understood that the members **1510** and **1510***a* may optionally be removed together for cleaning and may be placed mechanically adjacent to each other. It is understood that the optional particle separation member **1510** or **1510***a* may be the same as described with respect to FIG. **15**.

[**0368**] It is also understood in this invention that the optional particle separation member **1510** or **1510***a* may be physically adjacent to the suction source **1511** or that it may be connected to said suction by means of a duct or passage way which may include one or more bends. It is also understood that the outlet of the cyclones way be through the bottom or sidewall of the cyclone, or a combination thereof.

[**0369**] It is also understood that the fluid flow **1501** may come from any source as described with respect to FIG. **15**.

[**0370**] It is also understood in this invention that the cyclone separators **1504** and **1505** may each represent a single or a plurality of parallel cyclones, and that this invention may be applied to more than two sequential cyclones so that the particles **1512** are collected in a number of cyclones or cyclone stages which is less than the total

number of cyclones or cyclone stages. It is also understood that **1510** or **1510***a* may themselves be a plurality of cyclones mounted into the wall or the portion of the wall of a larger cyclone thereby creating a structure which minimizes energy losses in connecting ducts. It is also understood that the structures described in FIGS. **15** and **15**A can be configured to remove nano-sized particles and live virus particles.

Transparent Plastic Sections

[**0371**] In accordance with another aspect, which may be used individually or with any other aspect, a surface cleaning apparatus has a plurality of cyclones in parallel **9** having at least one dirt collection chamber **52** wherein at least a portion of the dirt collection chamber below the maximum fill position (which may be a maximum fill line marked on the housing) is transparent.

[**0372**] For example, in the embodiment of FIG. **2***a,* second stage cyclones each have a dirt collection chamber **52** having an outer wall **100** that is transparent. Further, cyclone chamber **102** has an outer wall **104** that is transparent. Second stage cyclones **9** are provided within a casing or housing having a side wall **106** and a top wall **108** which are transparent. Provided that a portion of side wall **106** that is outward of the maximum fill line of dirt collection chamber **52** is transparent, then a user may view the maximum fill line or position and determine when to empty the second stage dirt collection chambers **52**. It will be appreciated that, as exemplified, each of the second stage cyclones and the second stage cyclone housings may be made from transparent plastic (which may be shaded or tinted but still permit a user to see therethrough) and that part may be masked by a label or coating so as to render part thereof opaque. Provided the user can view when the dirt collection chamber(s) **52** are full, the user will have a visual signal to clean or empty the second stage cyclones. This design is particularly preferred when the plurality of cyclones **9** has an associated plurality of dirt collection chambers **52**, and preferably each cyclone **9** has an associated dirt collection chamber **52**, and, particularly, when the cyclones **9** are emptied separately from another cleaning stage.

[**0373**] Alternately, or in addition, a filter **112** (e.g., foam, HEPA, etc.) may be provided in a housing **110** wherein at least a portion of the housing that is visible, or may be made visible, is transparent. Preferably, all of housing **110** is transparent plastic. This permits a user to notice when filter **112** is dirty and requires cleaning or replacement. Preferably, housing **110** is a pre-motor filter. Accordingly, for example, housing **112** may be provided in pre-motor area **16**. Thus when cyclonic cleaning unit **6** is removed, a user can view housing **110**, e.g., the top thereof. However, it will be appreciated that filter **112**, which is not provided in the cyclone chamber, may be visible through a transparent side wall of the vacuum cleaner or may housing **110** may be visible when a door that is provided in the vacuum cleaner is opened. An advantage of using a housing is that the consumer need not touch filter **112** when removing filter **112** from the vacuum cleaner.

[**0374**] It will be appreciated that one or more filters (e.g., foam) may be removable with the cyclone array **156** and that these may be provided in a housing, a portion or all of which is transparent.

Uses

[**0375**] It is also understood that any or all of the embodiments may be used individually or in combination or subcombinations. In addition to their use in surface cleaning appliances and other domestic appliances and breathing masks, they may also be used, singly or in combination, in other applications.

[**0376**] For example, the cyclonic embodiments described herein may be used in conjunction with a fan or other air moving means to create a sweeper, a sweeper with suction, a vacuum cleaner, a canister vacuum cleaner, an upright vacuum cleaner, a wet/dry vacuum cleaner, a stick vacuum cleaner, a carpet shampooer, a carpet extractor, a hand vacuum, a back pack vacuum, a vehicle mounted vacuum, or any other type of vacuum cleaner or dust extractor or to pick up unwanted particles and to subsequently remove unwanted particles from air.

[**0377**] Alternately, the cyclonic embodiments described herein may be applied to the inlet for cooling air to, and/or the outlet of air from, computers, electronic equipment, or mechanical equipment to protect a computer or equipment from particles, which may damage them or impair their function.

[**0378**] It is also understood that the cyclonic embodiments described herein may be used in conjunction with a fan or other air moving means to create an air cleaner, air purifier, airborne particle capture system, fan with a particle capture system, automotive cabin air filter, heating, cooling or ventilation system to capture unwanted particles from an air stream.

[**0379**] It is also understood that the cyclonic embodiments described herein may be used in conjunction with a fan or other air moving means to create a filter mask to capture unwanted particles from an air stream. A filter mask constructed with the cyclones descried in this specification or with any cyclones known in the art may be designed to filter the air that a person breathes in, breathes out, or both, so as to be able to create a portable means of isolating a person from their surrounding environment. A small fan may optionally be used to reduce the pressure that the person must exert with their lungs to breathe in and/or out through the cyclonic means.

[**0380**] It is also understood that the cyclonic embodiments described herein may be used in conjunction with a fluid moving device to create a means of removing unwanted particles from fluid. The cyclonic embodiments described in this specification may be placed in the duct leading to the fluid moving member, either directly adjacent or some distance away, to protect the fluid moving member from the particles and to remove them. The cyclonic embodiments described herein may alternately or also be placed in the duct leading from a fluid moving member, either directly adjacent or some distance away, to protect equipment downstream from the fluid moving member from the particles which the fluid moving member may introduce to the fluid stream. The positioning of the cyclonic embodiments described herein may be mechanically arranged so that they can both be removed for cleaning or servicing together.

[**0381**] It is also understood that the cyclonic inventions described herein may be used to reduce the particle emissions from any type of burner used to heat homes, heat

water, and to remove emissions from the exhaust gasses from industrial processes, the exhaust gasses from internal combustion engines, the exhaust gasses from external combustion engines and the exhaust gasses from turbine engines. The cyclonic embodiments described herein may be placed in the duct leading to or from the emission source, either directly adjacent or some distance away, to protect the particle emission causing device from particles in the air stream which they require to operate. The cyclonic embodiments described herein may alternately or also be placed in the duct leading from the particle emissions source, either directly adjacent or some distance away, to protect equipment downstream from the emissions source and the environment from the particles which the emissions source may introduce into its exhaust stream.

[0382] The advantage of the multi stage cyclonic separation means described herein is that a vacuum cleaner, filter mask or other apparatus mentioned herein may be produced which can optionally reach HEPA or ULPA separation levels without the use of a filter.

[0383] The cyclonic separation means employed in this manner may be cleaned or disposed of, or a combination thereof.

Optional Fluid Flow Motors

[0384] The fan means used in any aspect may be a two to ten stage fan system operating from one or more motors in series or in parallel and the fan may be a propeller, an impeller, a Prandtl layer turbine also known as a Tesla turbine, or a combination thereof.

[0385] Optionally, the vacuum cleaner may be powered by means of a Stirling engine, a steam engine, or an internal combustion engine wherein said Stirling engine, steam engine, or internal combustion engine may optionally be operated from hydrogen gas produced by electricity from the wall or from a battery or produced by a chemical reaction or which may optionally be withdrawn from a storage vessel. The option to manually or automatically switch the hydrogen source powering the vacuum from one source to another may be provided. It is to be appreciated that a hydrogen powered appliance, including surface cleaning apparatus and other appliances for indoor use, may operate using any design known in the respective arts.

[0386] Hydrogen produced by electricity when an appliance, e.g. a surface cleaning apparatus, preferably a vacuum cleaner, is plugged into an electric outlet may be used to power the surface cleaning apparatus. All or a portion of the hydrogen may be stored for cordless operation. It will be appreciated that some hydrogen may be used as it is generated to operate the device. Such a hydrogen powered surface cleaning apparatus may be used alone or in combination with any other embodiment disclosed herein. The hydrogen produced by electricity when the vacuum is plugged in but not being used is a preferred method of operating. The storage means contemplated is any means known in the art including but not limited to pressurized storage, storage in a metal hydride or other adsorptive storage means. The hydrogen stored may be produced by fuel reforming, chemical reactions or by electrolysis. Alternately, or in addition, a central hydrogen generator which charges a small portable "vessel" which is plugged into the air cleaning device may be provided.

Adhesive Member

[0387] It is also understood that in any embodiment, an adhesive material such as agar or pectin or a rubber based adhesive may be applied to the all or a portion of interior surfaces of cyclone separator **20** to assist in the capture and retention of fine particles. For example, the adhesive can be applied to the interior and exterior of the down flow tubes **27***b* and **27***c* and/or plate **32** which may be removed for cleaning when the bottom of the cyclones is removed or this section may be disposed of and replaced with a clean piece with fresh adhesive. Alternately, or in addition, the mesh used to construct the screen **28** may incorporate an adhesive or micro-filaments, which aid in the entrapment of fibers, hairs or particles. Accordingly, if the screen **28** comprises an adhesive material, it will be appreciated that the screen **28** may be disposable.

[0388] This embodiment is particularly useful in cyclone separators where small quantities of fine particles are to be collected such as in the second, third, or fourth or other sequential stages of a multistage cyclone separator. Alternately, or in addition, the plate may be made from or coated with a fibrous material, such as micro filaments, to assist in retaining dirt in the cyclone casing. It will be appreciated that, in accordance with such embodiments, the plate may be disposable.

Water Mist

[0389] In accordance with another aspect, which may be used individually or with any other aspect, a water mist created, preferably, by means of electrostatically and/or mechanically atomization can be placed upstream of a cyclonic embodiment described herein or any cyclonic separation means known in the art to create a humidification means wherein the particles which do not become collected are cyclonically removed from the fluid flow stream. Optionally, one or more or a combination of the cyclonic embodiments described in this specification or any cyclonic separation means known in the art may be placed upstream of the mist source to prevent airborne particles from contaminating or otherwise interfering with the operation of the mist source.

[0390] The water, which does not evaporate, may be recirculated though a filter and/or ozone disinfection and oxidation system and/or ultra violet light disinfection system before it is reused in the atomization process. If ozonated water is used to create the mist, air disinfection can be achieved before a down stream cyclone separator is employed to remove the remaining ozonated water droplets from the air stream.

[0391] It is also understood that ozone gas can be introduced into an air stream to oxidize pollutants and to disinfect airborne particles upstream and that the down stream cyclone separator can remove oxidized particles and that if optionally, an electrostatic and/or mechanical atomization mist source is employed, the ozone gas can be captured in the water droplets and the water droplets can be removed by means of a down stream cyclone separator.

[0392] The improvements may be used in a single application, or individually or in sub-combinations. In particular, the improvements in the design of cyclones and arrays of cyclones may be used in a single application, or individually or in sub-combinations. For example, one or more of the

improvements may be used in a single vacuum cleaner. The improvements which are selected may be determined based on the degree of particulate removal which is required, whether a pre and/or post motor filter is utilized, the amount of back pressure which may be produced by the air flow path through the vacuum cleaner, the power of the suction motor and the like.

[0393] It will be appreciated that various modifications and alterations of the embodiments known herein may be made and each is within the scope of the following claims.

1. A surface cleaning apparatus comprising:

(a) a dirt inlet;

(b) a handle;

(c) a cyclone separator having an outer wall, a fluid inlet downstream from the dirt air inlet and a fluid outlet;

(d) a plate having a cyclone chamber surface and positioned to substantially divide the cyclone separator into a cyclone chamber and a dirt collection chamber, the plate being removably mounted in the cyclone separator;

(e) a passage extending between the cyclone chamber and the dirt collection chamber; and,

(f) a fluid flow motor.

2. The surface cleaning apparatus of claim 1 wherein the plate is retained in position in the cyclone separator by magnets.

3. The surface cleaning apparatus of claim 1 wherein the plate is mechanically retained in position.

4. The surface cleaning apparatus of claim 3 wherein the cyclone separator has a mechanical engagement member and the plate has a portion that is engageable with the mechanical engagement member.

5. The surface cleaning apparatus of claim 1 wherein the plate has a hand grip portion.

6. The surface cleaning apparatus of claim 5 wherein the hand grip portion comprises a shaft extending away from the plate.

7. The surface cleaning apparatus of claim 1 wherein the dirt collection chamber extends under the plate.

8. The surface cleaning apparatus of claim 1 wherein a flow director having a flow directing surface that extends inwardly and downwardly into the cyclone chamber from the outer wall of the cyclone chamber to a position above the plate.

9. The surface cleaning apparatus as claimed in claim 1 wherein the surface cleaning apparatus is selected from the group consisting of a vacuum cleaner, a sweeper and a carpet extractor.

10. The surface cleaning apparatus of claim 1 wherein the dirt collection chamber has a bottom that is openable.

11. The surface cleaning apparatus of claim 10 wherein the plate is removably subsequent to the bottom being opened.

12. A surface cleaning apparatus comprising:

(a) a dirt inlet;

(b) a handle;

(c) a cyclone separator having an outer wall, a fluid inlet downstream from the dirt air inlet, an openable bottom and a fluid outlet;

(d) a plate having a cyclone chamber surface and positioned to substantially divide the cyclone separator into a cyclone chamber and a dirt collection chamber, the plate being movably mounted in the cyclone separator independent of the bottom;

(e) a passage extending between the cyclone chamber and the dirt collection chamber; and,

(f) a fluid flow motor.

13. The surface cleaning apparatus of claim 12 wherein the plate is moveably mounted between an in use position wherein the plate substantially divides the cyclone separator into a cyclone chamber and a dirt collection chamber and an emptying position wherein the plate is in a potion to permit dirt to in the cyclone chamber and the dirt collection chamber to be removed concurrently.

14. The surface cleaning apparatus of claim 12 wherein the plate is pivotally mounted to the outer wall of the cyclone separator.

15. The surface cleaning apparatus of claim 12 wherein the plate has a hand grip portion.

16. The surface cleaning apparatus of claim 15 wherein the hand grip portion comprises a shaft extending away from the plate.

17. The surface cleaning apparatus of claim 12 wherein the dirt collection chamber extends under the plate.

18. The surface cleaning apparatus of claim 12 wherein a flow director having a flow directing surface that extends inwardly and downwardly into the cyclone chamber from the outer wall of the cyclone chamber to a position above the plate.

19. The surface cleaning apparatus as claimed in claim 12 wherein the surface cleaning apparatus is selected from the group consisting of a vacuum cleaner, a sweeper and a carpet extractor.

20. The surface cleaning apparatus of claim 12 wherein the plate is moveable subsequent to the bottom being opened.

* * * * *