US005078761A

United States Patent [19]

Dyson

[11] **Patent Number: 5,078,761**

[45] **Date of Patent: Jan. 7, 1992**

[54] **SHROUD**

[75] Inventor: **James Dyson,** Bath-Avon, England

[73] Assignee: **Notetry Limited,** Bradford House, England

[21] Appl. No.: **621,375**

[22] Filed: **Dec. 3, 1990**

Related U.S. Application Data

[63] Continuation-in-part of Ser. No. 549,080, Jul. 6, 1990.

[51] **Int. Cl.**[5] **B01D 45/12**

[52] **U.S. Cl.** **55/213;** 55/337; 55/345; 55/429; 55/459.1; 55/DIG. 3

[58] **Field of Search** ..... 15/353; 55/213, 215, 55/216, 337, 345, 429, 452, 459.1, 459.3, DIG. 3

[56] **References Cited**

U.S. PATENT DOCUMENTS

4,643,748 2/1987 Dyson ..... 55/345 X
4,853,008 8/1989 Dyson 55/345

Primary Examiner—Charles Hart
Attorney, Agent, or Firm—Ian C. McLeod

[57] **ABSTRACT**

A disc-shaped shroud having a cylindrical section (**50***c*, **132**) adjacent to an inner surface (**15***b*, **111***b*) of a cyclonic container (**15, 111**) including a preferred combined shroud and disc unit (**50**) for use in a dual inner and outer cyclonic vacuum cleaner (**10**) is described. The combined shroud and disc unit fits on the outside surface (**20***c*) of the inner cyclone (**20**) and aids in removal of dirt and fibrous matter from the airflow in the outer cyclone (**15**). Improved airflow between the outer cyclone (**15**) and inner cyclone (**20**) is achieved because of the shroud and disc unit (**50**).

38 Claims, 8 Drawing Sheets

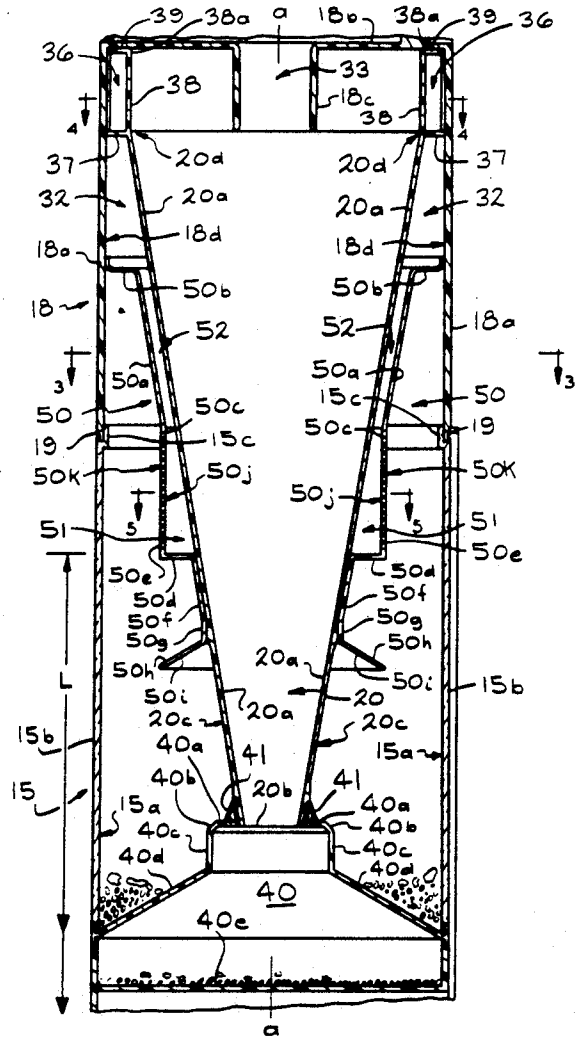

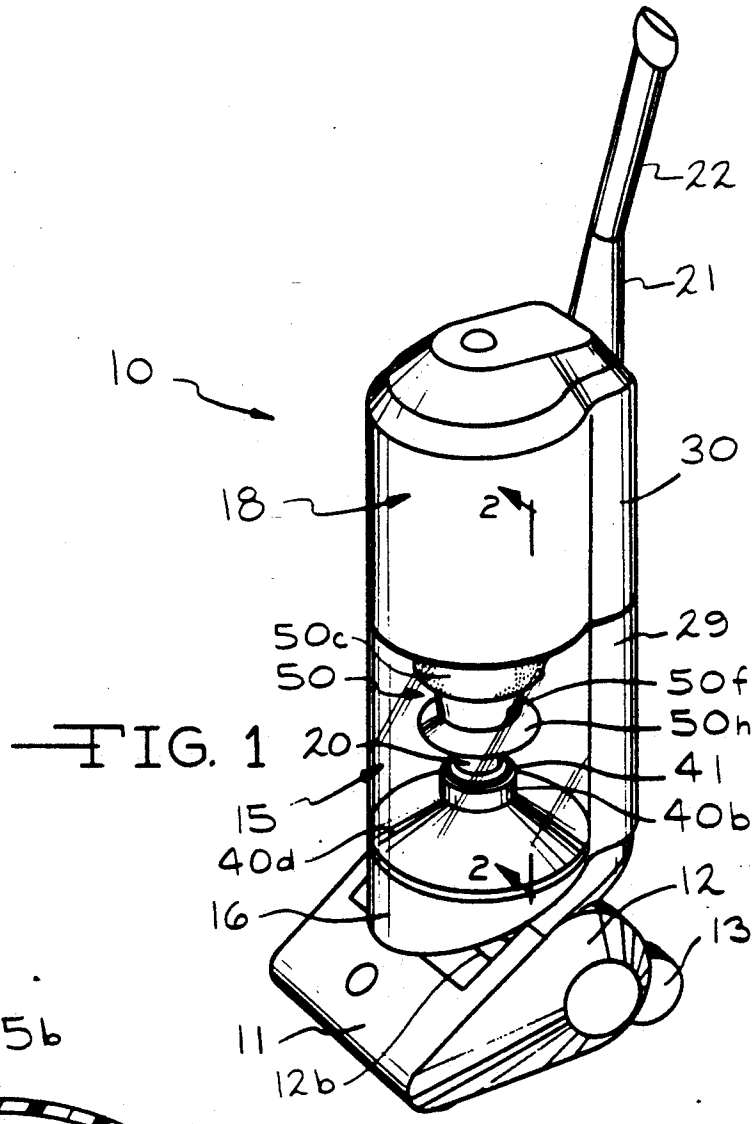
22
21
10
30
18
2
29
50c
50
50f
50h
20
41
15
40b
40d
2
12
16
13
11
12b

FIG. 1

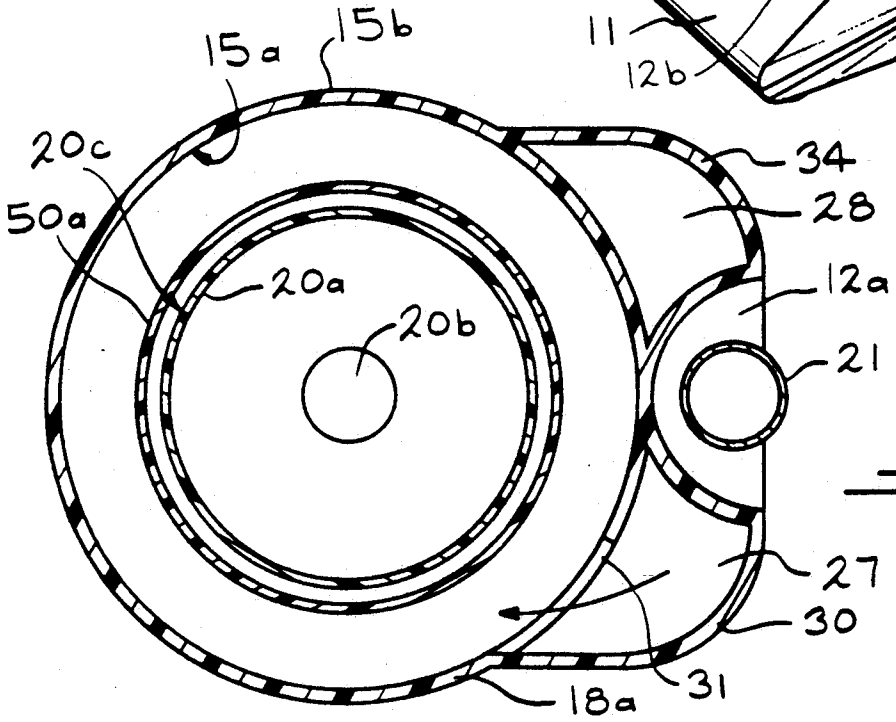
15a
15b
20c
34
50a
28
20a
12a
20b
21
27
30
31
18a

FIG. 3

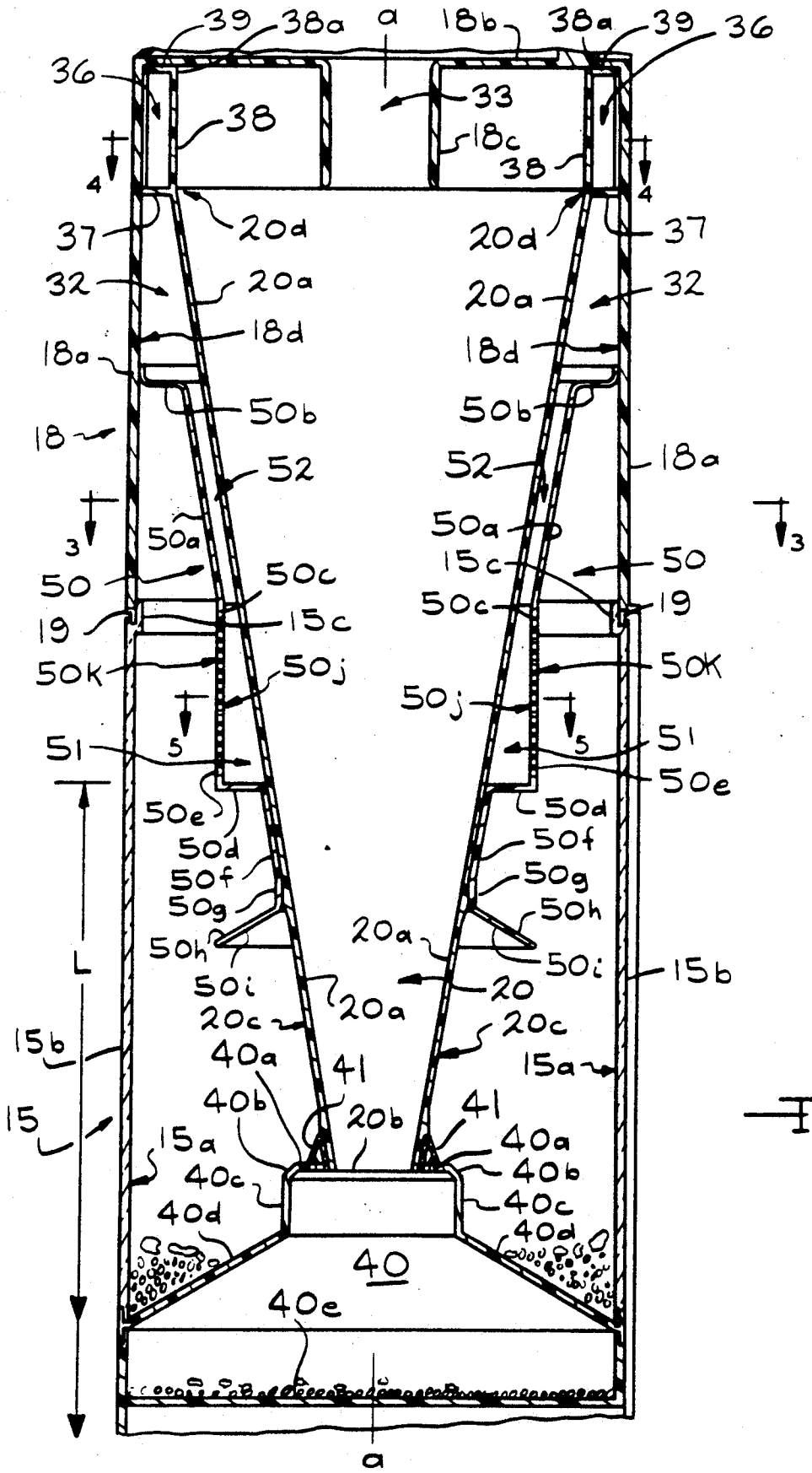
39
38a
a
18b
38a
39
36
36
33
38
18c
38
4
4
37
20d
20d
37
32
20a
20a
32
18d
18d
18a
50b
50b
18
52
52
18a
3
50a
50a
3
50
50c
15c
50
50c
19
15c
19
50K
50j
50K
50j
5
5
51
51
50e
50e
50d
50d
50f
50f
50g
50g
50h
20a
50h
50i
50i
15b
L
20a
20
20c
20c
15b
40a
41
15a
40b
20b
41
15
15a
40a
40c
40b
40c
40d
40d
40
40e
a

FIG. 2

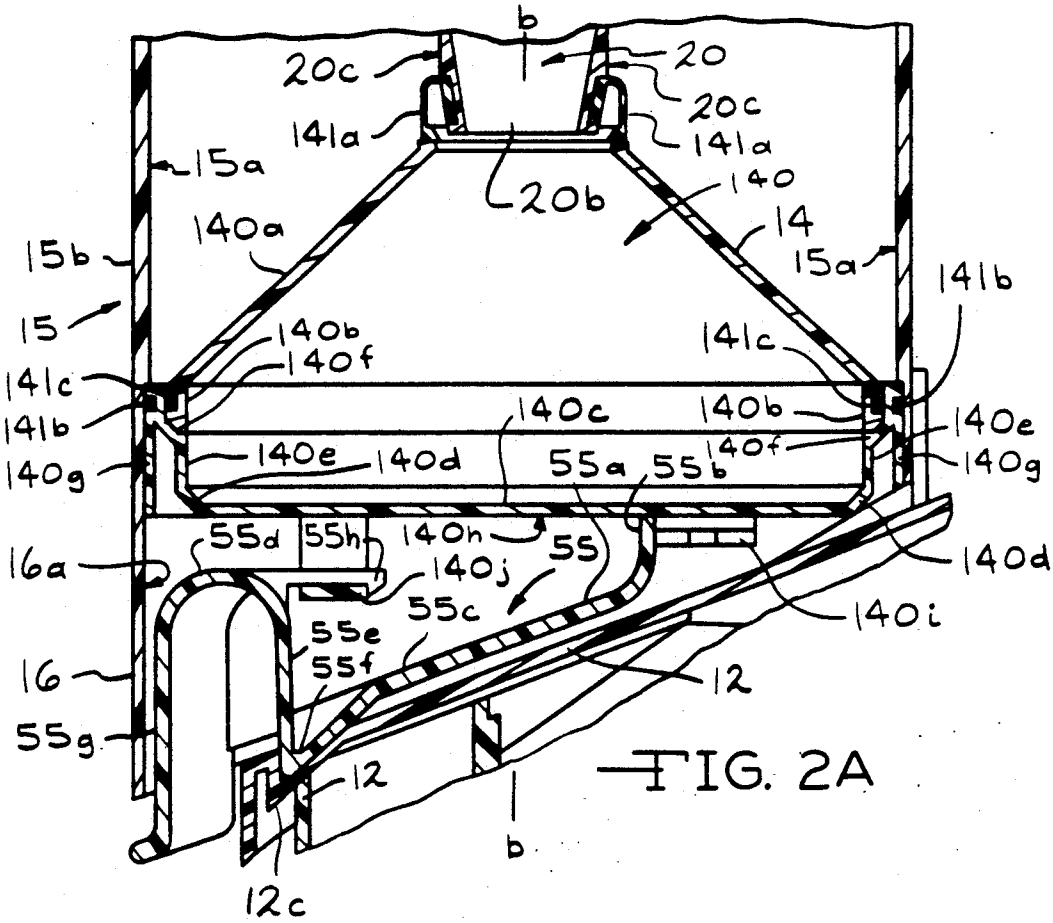

FIG. 2A

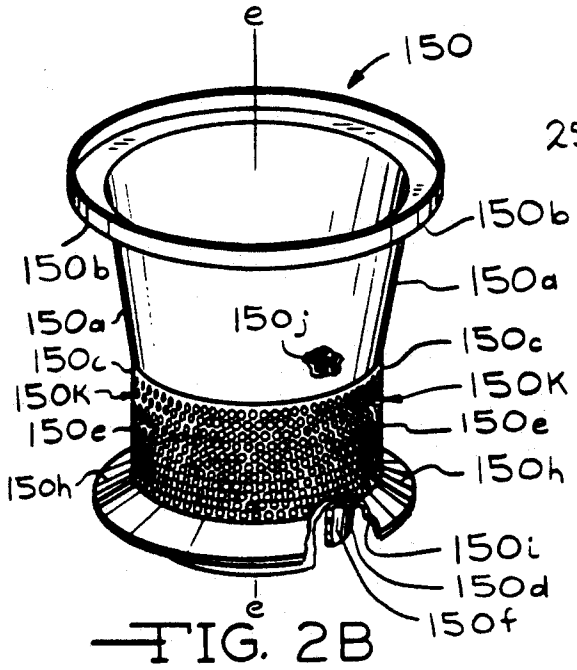

FIG. 2B

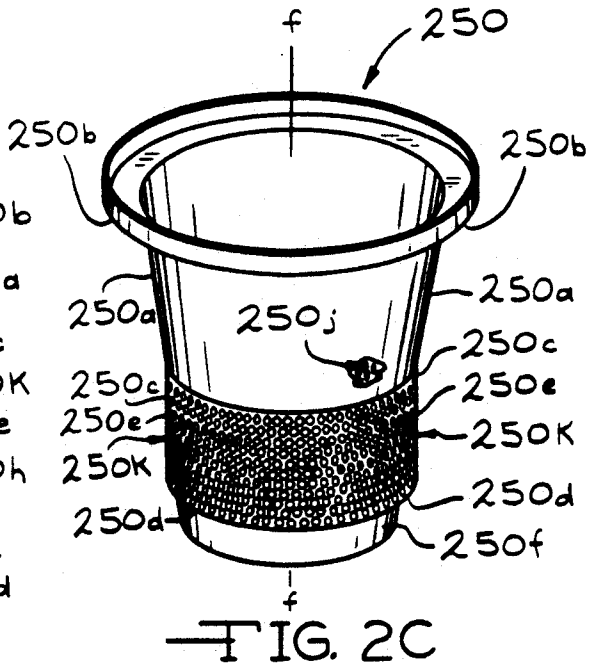

FIG. 2C

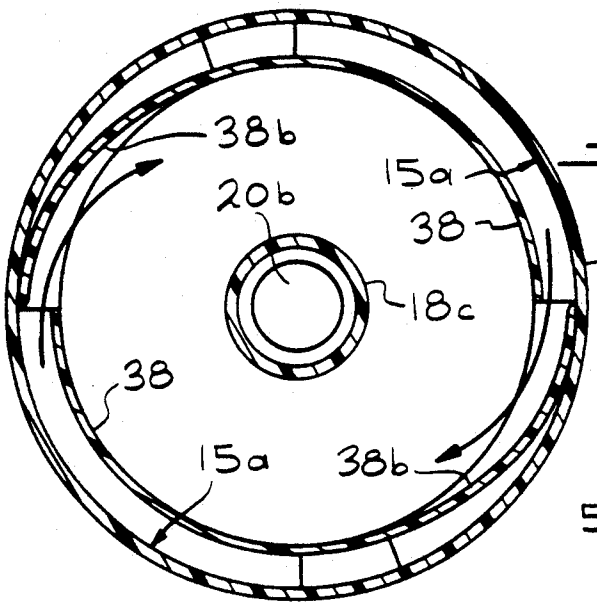

FIG. 4

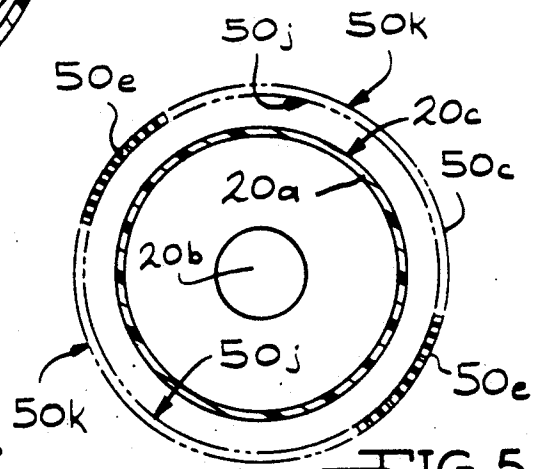

FIG. 5

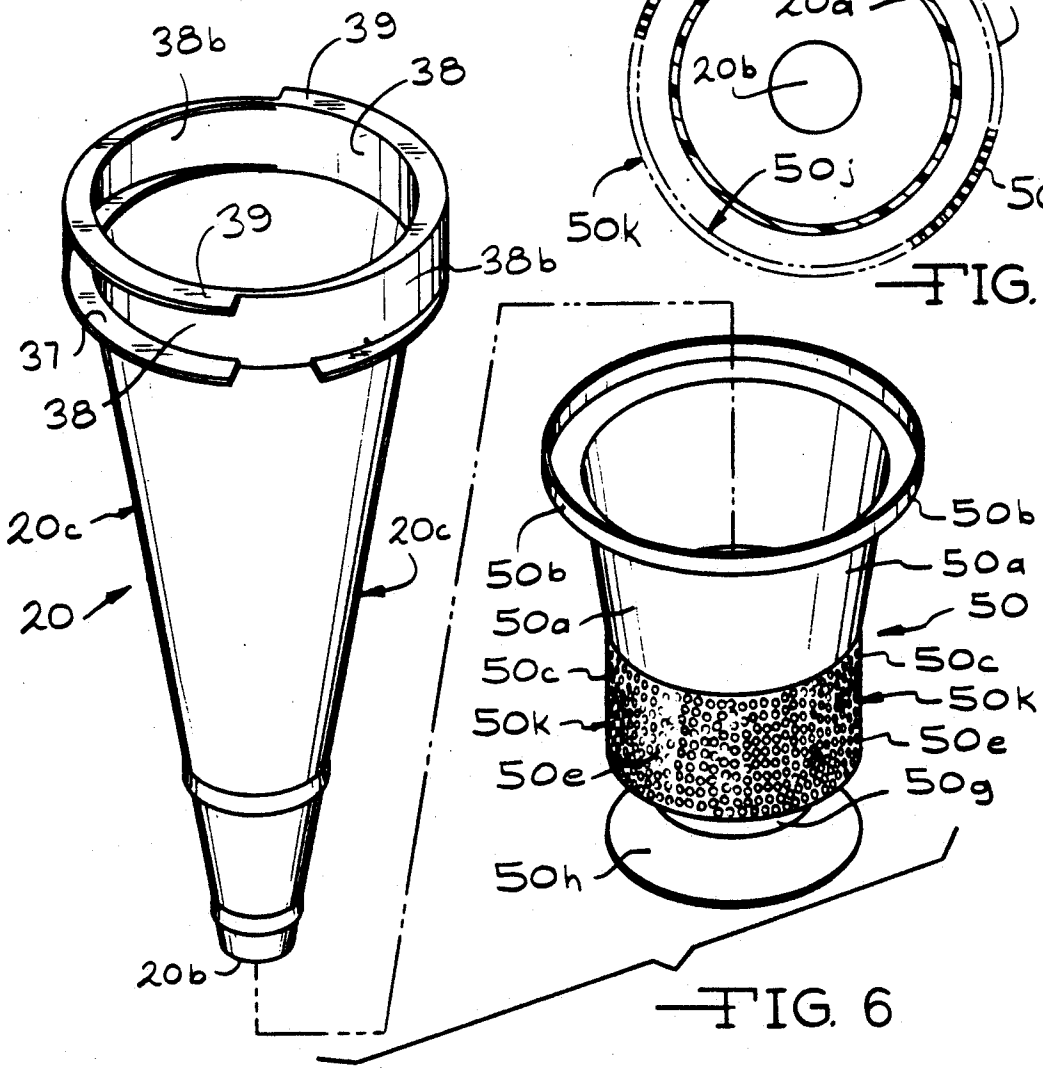

FIG. 6

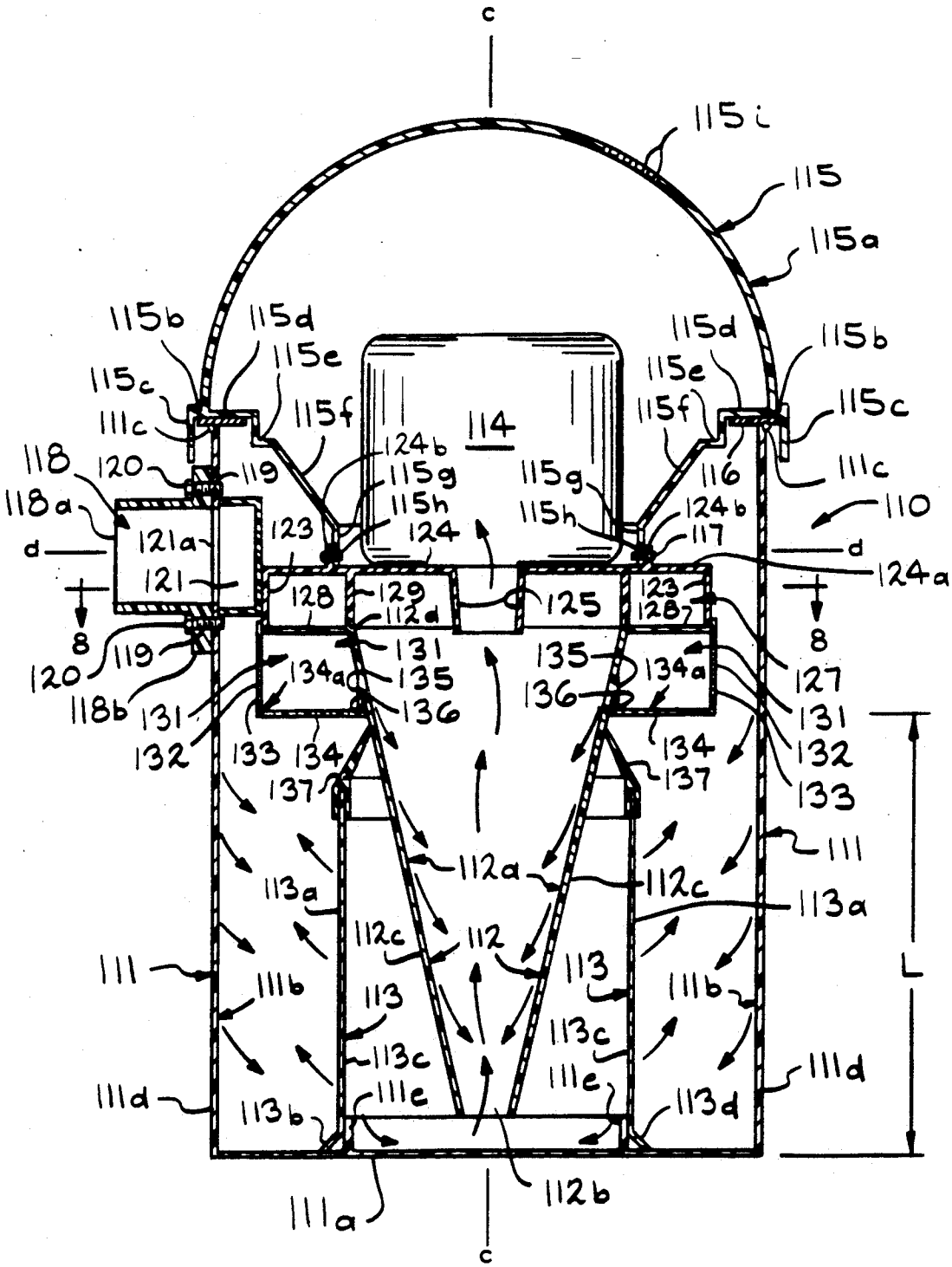
c
115i
115
115a
115b
115d
115e
115c
111c
115f
114
124b
115g
115h
118
120
119
118a
121a
121
123
124
116
117
110
124a
d
8
128
129
112d
125
127
131
135
134a
136
132
133
134
137
118b
111
112a
112c
113a
112
113
111b
113c
111d
111e
113b
113d
112b
111a
L

FIG. 7

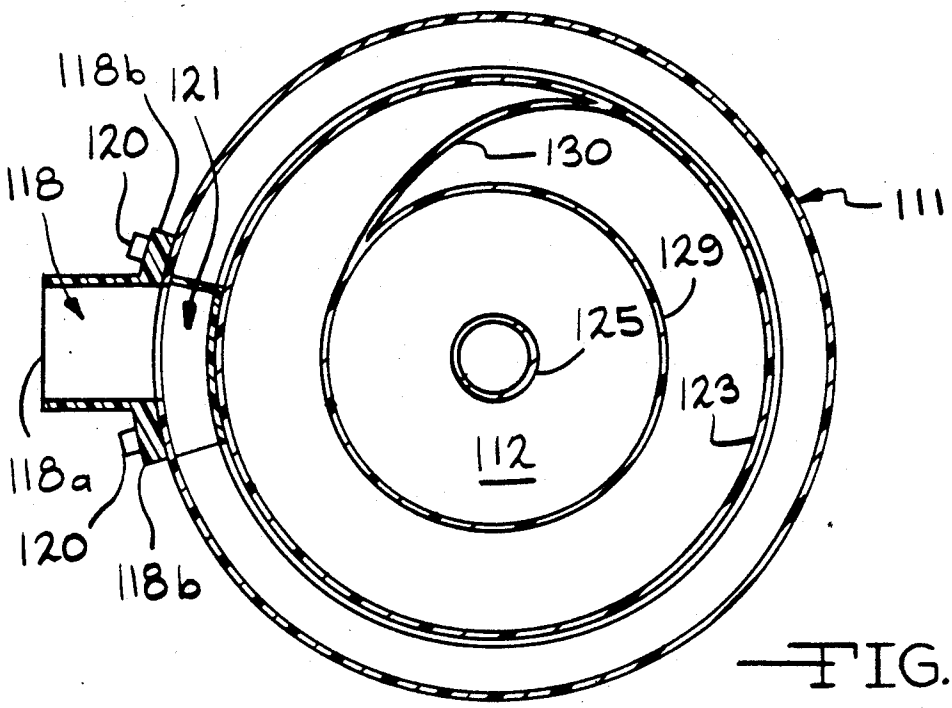
118b
121
120
118
130
111
129
125
123
112
118a
120
118b

FIG. 8

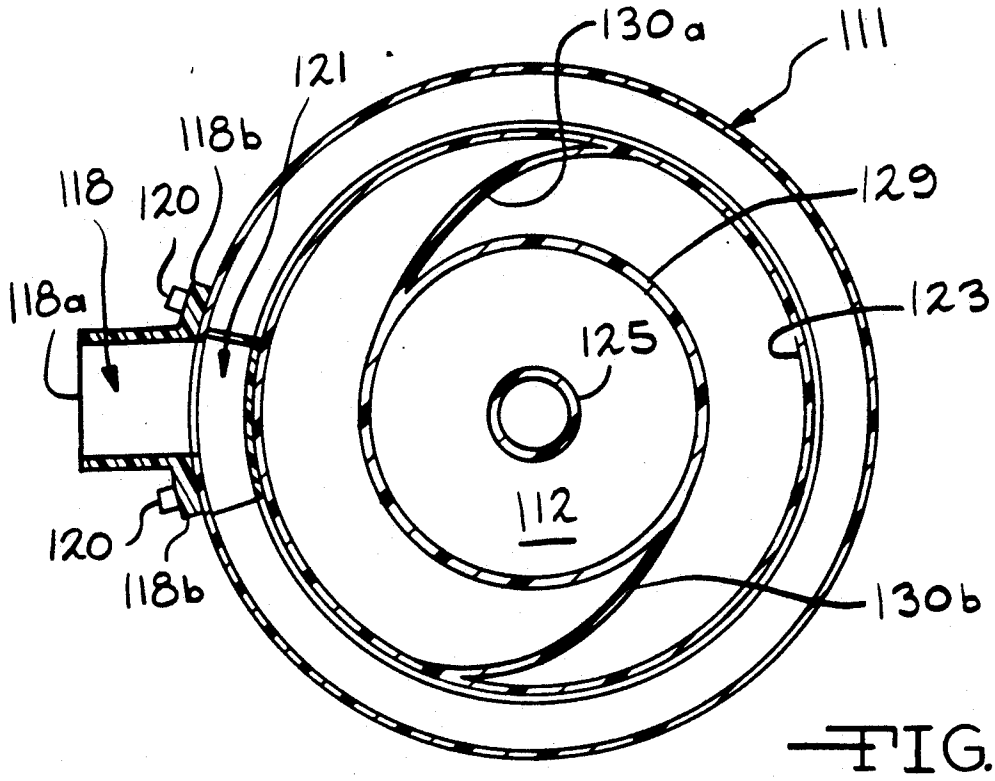
130a
111
121
118b
118
120
129
118a
123
125
112
120
118b
130b

FIG. 8A

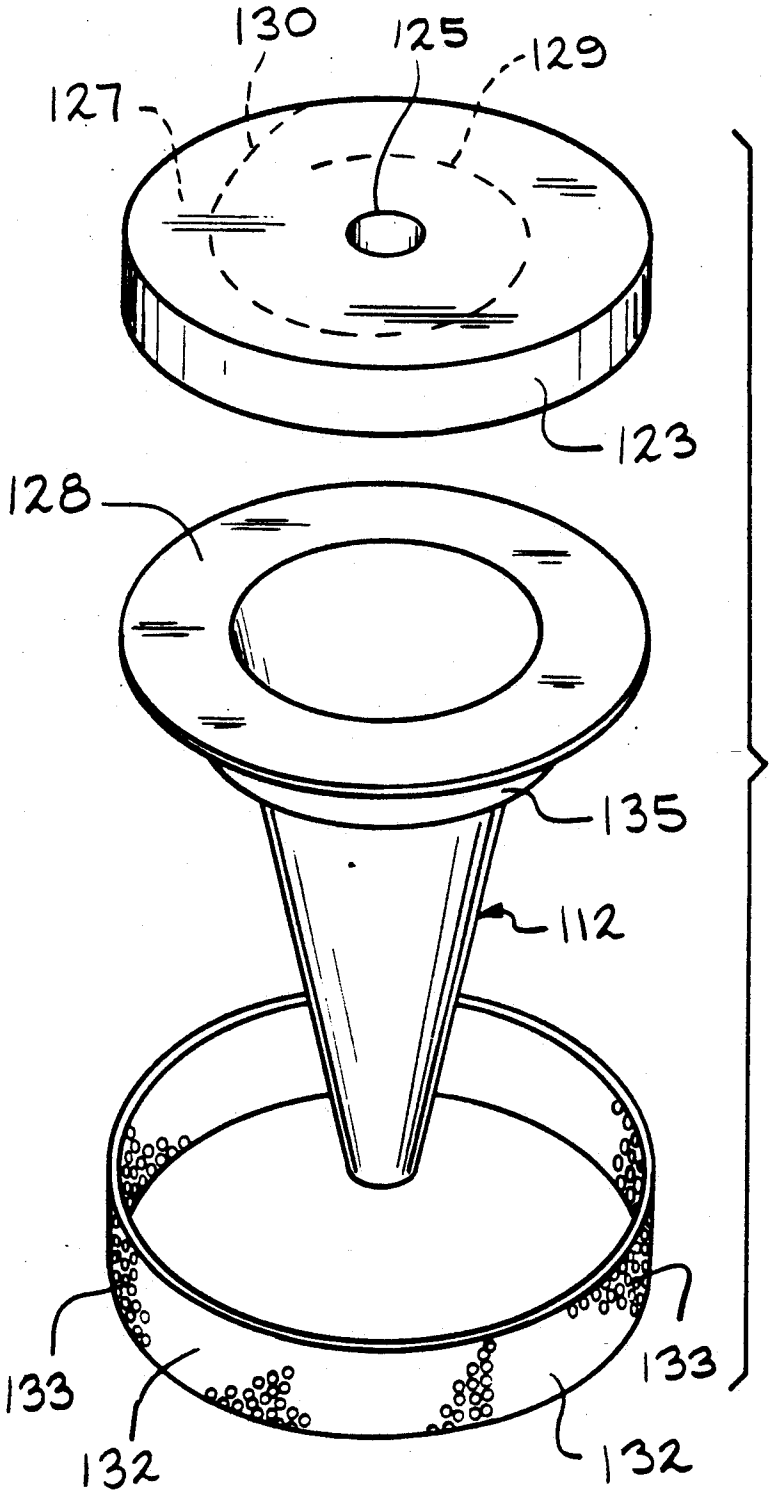

FIG. 9

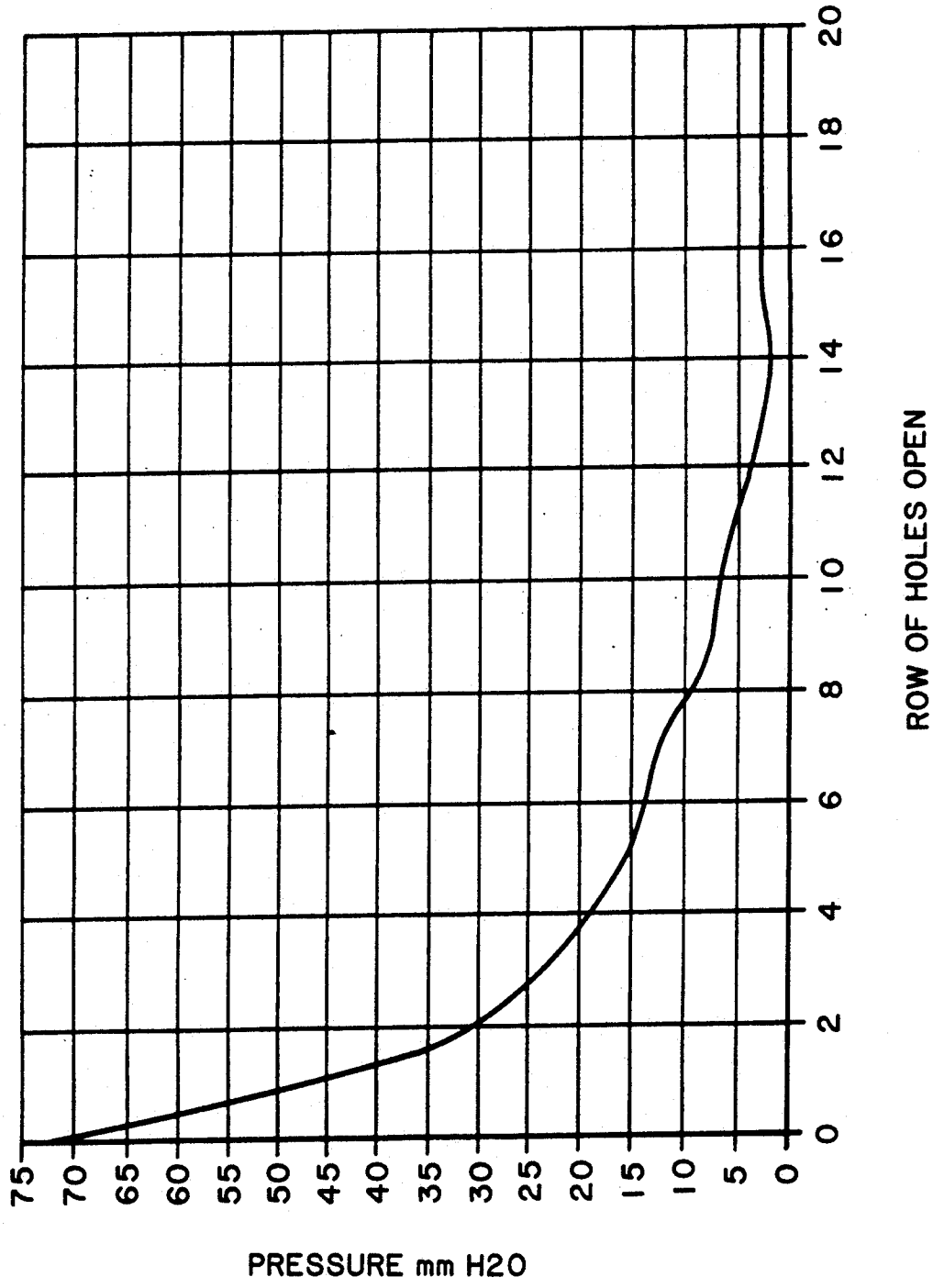
75
70
65
60
55
50
45
40
35
30
25
20
15
10
5
0
PRESSURE mm H2O
0
2
4
6
8
10
12
14
16
18
20
ROW OF HOLES OPEN

FIG. 10

SHROUD

CROSS-REFERENCE TO RELATED APPLICATION

This application is a continuation-in-part of U.S. application Ser. No. 07/549,080, filed July 6, 1990.

BACKGROUND OF THE INVENTION

(1) Field of the Invention

The present invention relates to an improved shroud for a dual inner and outer cyclonic cleaning apparatus. In particular, the present invention relates to a shroud which has a perforated section that is parallel with and purposely spaced from the inside surface of the outer cyclone or container and which allows air to pass into a frusto-conically shaped inner cyclone without plugging the inlet openings to the inner cyclone through the apparatus.

(2) Prior Art

Cyclonic vacuum cleaning apparatus are shown in my U.S. Pat. Nos. 4,573,236; 4,593,429; 4,571,772; 4,643,748; 4,826,515; 4,853,011 and 4,853,008. My U.S. Pat. No. 4,853,008 describes a dual cyclonic cleaning apparatus wherein a combined disc and shroud unit is mounted on the outside of the inner cyclone in order to retain dirt in an outer cyclonic cleaner. The shroud has a perforated lower section adjacent to and above the disc which is parallel to the conical outside surface of the cyclone. The perforated section acts as an air inlet to the inner cyclone while the disc keeps large dirt particles and fibrous matter in the outer cyclone. The combined disc and shroud work well; however, there was a need for an improved design which would not allow the shroud perforations to be filled with dirt before the outer cyclone was full of separated dirt.

OBJECTS

It is therefore an object of the present invention to provide an improved cleaning apparatus wherein the shroud is designed to substantially reduce the tendency for dirt particles and fibrous matter to obstruct the shroud openings leading to the inner cyclone air inlet. Further, it is an object of the present invention to provide a combined disc and shroud which is easily mounted on the outside of the inner cyclone. Still further, it is an object of the present invention to provide an improved shroud which is simple and inexpensive to construct and easy to clean and which at the same time prevents escape of fibrous matter from the outer cyclone. These and other objects will become increasingly apparent to those skilled in the art and by reference to the drawings.

IN THE DRAWINGS

FIG. **1** is a left side perspective view of a preferred upright type vacuum cleaning appliance of the present invention, particularly showing an outer cyclone **15** surrounding the combined shroud and disc unit **50** mounted on the outside of an inner cyclone **20**.

FIG. **2** is a front cross-sectional view along line **2—2** of FIG. **1** showing the shroud and disc unit **50** positioned between the inner cyclone **20** and the outer cyclone **15**.

FIG. **2A** is a front cross-sectional view along a plane perpendicular to line **2—2** of FIG. **1** showing the spring catch **55** for removing the outer cyclone **15** and receiver **140** from the inner cyclone **20**.

FIG. **2B** is a front cross-sectional view along line **2—2** of FIG. **1** showing another version of the shroud and disc unit **150**.

FIG. **2C** is a front cross-sectional view along line **2—2** of FIG. **1** showing another version of the shroud **250**.

FIG. **3** is a plan cross-sectional view along line **3—3** of FIG. **2** showing the dirty air inlet passage **27**, the clean air exhaust passage **28** and the intermediate handle **21** mounted on the outside of the outer cyclone **15**.

FIG. **4** is a plan cross-sectional view along line **4—4** of FIG. **2** showing the tangential air inlet into the inner cyclone **20**.

FIG. **5** is a plan cross-sectional view along line **5—5** of FIG. **2** showing the perforated openings **50*e*** through the shroud,,member **50*c***.

FIG. **6** is a separated perspective view showing the positioning of the inner cyclone **20** inside of the shroud and disc unit **50**.

FIG. **7** is a front cross-sectional view of a preferred tank type cleaning apparatus of the present invention and particularly showing an outer cyclone **111**, an inner cyclone **112**, a dirt collection receiver **113**, and an inlet scroll **127** and associated shroud **131** to the inner cyclone **112**.

FIG. **8** is a plan cross-sectional view along line **8—8** of FIG. **7** showing the inlet passage **121** to the outer cyclone **111** with spiral member **130** for inlet into the inner cyclone **112**.

FIG. **8A** is a plan cross-sectional view showing the inlet scroll **127** having two spiral members **130*a*** and **130*b*** rather than one as shown in FIG. **8**.

FIG. **9** is an isometric, separated view of the inner cyclone **112**, inlet scroll **127**, and the ring **132** with openings **133**.

FIG. **10** is a graph showing area of openings **50*e*** versus pressure drop across a cylindrical section **50*c*** of the shroud and disc unit **50**.

GENERAL DESCRIPTION

The present invention relates to an improvement in a cleaning apparatus including a container comprising a bottom and a sidewall extending to and meeting the bottom, the sidewall having an interior surface, a dirty air inlet which is oriented for supplying dirt laden air into the container tangentially to the interior surface of the container which has a circular cross-section and an air outlet from the container; a cross-sectioned cyclone having a longitudinal axis mounted inside the container, the cyclone comprising a cyclone air inlet at an upper end having a first diameter of the cyclone in air communication with the air outlet of the container, an interior dirt rotational surface of frusto-conical shape for receiving an airflow from the air inlet and for maintaining its velocity to a cone opening smaller in diameter than the diameter of the upper end of the cyclone, the air inlet being oriented for supplying air tangentially to the surface, an outer surface of frusto-conical shape, and a cyclone air outlet communicating with the interior of the cyclone adjacent the upper end of the cyclone; a dirt collecting receiver extending from the cone opening; and means for generating an airflow which passes through the casing, the dirty air inlet, the cyclone, the dirt receiver and the cyclone air outlet, the airflow rotating around the frusto-conical interior surface of the cyclone and depositing the dirt in the receiver the im-

provement which comprises: a shroud means mounted on and around the outer surface of the cyclone, having opposed ends along the longitudinal axis and providing an air outlet from the container into the air inlet to the cyclone, wherein a portion of the shroud has a cylindrical section between the ends with perforations which allow for the flow of the air from the container to the cyclone air inlet and which is spaced from and parallel to the inside wall of the container and wherein the other end of the shroud means is closed.

Further, the present invention relates to a shroud means for use in a cleaning apparatus including a container comprising a bottom and a sidewall extending to and meeting the bottom, the sidewall having an interior surface, a dirty air inlet which is oriented for supplying dirt laden air into the container tangentially to the interior surface of the container which has a circular cross-section and an air outlet from the container; a circular cross-sectioned cyclone having a longitudinal axis mounted inside the container, the cyclone comprising a cyclone air inlet at an upper end having a first diameter of the cyclone in air communication with the air outlet of the container, an interior dirt rotational surface of frusto-conical shape for receiving an airflow from the air inlet and for maintaining its velocity to a cone opening smaller in diameter than the diameter of the upper end of the cyclone, the air inlet being oriented for supplying air tangentially to the surface, an outer surface of frusto-conical shape, and a cyclone air outlet communicating with the interior of the cyclone adjacent the upper end of the cyclone; a dirt collecting receiver extending from the cone opening; and means for generating an airflow which passes sequentially through the dirty air inlet, the container, the cyclone air inlet, the cyclone, the dirt receiver and the cyclone air outlet, the airflow rotating around the frusto-conical interior surface of the cyclone and depositing the dirt in the dirt receiver the improvement which comprises: a shroud means to be mounted on and around the outer surface of the cyclone, having opposed ends along the longitudinal axis and providing an air outlet from the container into the air inlet to the cyclone, wherein a portion of the shroud has a cylindrical section with perforations which allow for the flow of the air from the container to the cyclone inlet and which is spaced from and parallel to the inside wall of the container and wherein the cylindrical section is joined to a web section an inside edge of which contacts the outside wall of the cyclone and an outside edge of which is joined to the cylindrical section.

It is unexpected that the perforated section could be directly facing the parallel inside wall of the container and have a relatively close spacing of 0.6 inches to 1.4 inches (1.5 cm to 3.6 cm) to the inside wall and still be so effective in dirt separation. For upright vacuum cleaners as shown in FIGS. 1 and 2, the preferred diameter of the cylindrical section of the wall of the shroud and the diameter of the inside surface of the container is about 4.3 inches and 6.4 inches (10.9 and 16.3 cm), respectively. For tank type vacuum cleaners as shown in FIG. 7, the diameter of the cylindrical section of the wall of the shroud and the diameter of the inside surface of the container is about 8.2 inches and 10.6 inches (20.8 cm and 26.9 cm), respectively.

It was found that as low a pressure drop as possible through the shroud is preferred. This means that a large number of openings, preferably round, should be provided in the perforated section of the shroud.

SPECIFIC DESCRIPTION

FIGS. 1 and 2 show an upright type vacuum cleaning apparatus **10** which is adapted for use in both the vertical mode and the horizontal mode, the vertical mode being illustrated. The functioning of the appliance will be described with reference to this vertical mode. The cleaning appliance **10** includes a cleaning head **11** connected to a casing **12** which supports a motor fan unit (not shown) that is mounted behind conventional floor engaging brushes (not shown) and inside wheels (not shown). Exterior wheels **13** are mounted behind the casing **12**.

An outer cyclone or container **15** is mounted on the casing **12**. The outer cyclone **15** is preferably made of clear plastic so that a person can see the outer cyclone **15** fill with dirt. The outer cyclone **15** has a circular cross-section along a longitudinal axis a—a and more preferably is cylindrical, or it can be outward tapering if space and dimensions permit. A skirt **16** is mounted on the outer cyclone **15** and extends to the casing **12**. The outer cyclone **15** has a bottom wall formed by the frusto-conical section **40*d*** of a receiver **40** that tapers downwardly and outwardly from the axis a—a, and a cylindrical inner surface **15*a*** (FIG. 3) which extends from the bottom wall **40*d*** of the receiver **40**. Supported on the outer cyclone **15** is a circular cross-sectioned airflow directing head **18** that is sealed to the end surface of the outer cyclone **15** by a flexible inverted L-shaped seal **19** and an annular lip member **15*c*** of the outer cyclone **15** (FIG. 2). Positioned radially inward from the outer cyclone **15** and head **18** is an inner cyclone **20**. The outer cyclone **15** and the inner cyclone **20** are preferably relatively long and slender along the longitudinal axis a—a.

The casing **12** is provided with a vertical extension **12*a*** (FIG. 3) which forms a rigid socket for slideably receiving the lower end of a tubular pipe or wand **21**. The pipe **21** includes a grip **22**. When the pipe **21** is fitted in the extension **12*a***, the hand grip **22** enables the appliance to be used as an upright type machine. In contrast, when the pipe **21** is slideably removed from the extension **12*a*** the pipe **21** is then used as a cleaner head at the end of a flexible hose (not shown) thus converting the appliance into a cylinder type machine. The conversion of the appliance from one mode of operation to the other and vice versa is described more fully in my U.S. Pat. No. 4,377,882.

Positioned adjacent to the outside wall **15*b*** of the outer cyclone **15** and mounting the outside wall **18*a*** of the head **18** on opposed sides of pipe **21** are spaced apart dirty air inlet and clean air exhaust passages **27** and **28**, respectively. The lower half of dirty air inlet passage **27** is formed by a rigid tube **29** adjacent to the outside wall **15*b*** of the outer cyclone **15**, as shown in FIG. 1. Tube **29** extends from a dirty air inlet passage (not shown) in casing **12** to a tube **30** mounted on the outside wall **18*a*** of the head **18** which forms the upper half of dirty air inlet passage **27**, (FIG. 3). Tube **30** communicates through the upper part of the outside wall **18*a*** of the head **18** through inlet passage **31** so as to make a tangential entry and set up a swirling, cyclonic flow of air in passage **32** of the head **18** leading to the outer cyclone **15**.

As shown in FIG. 2, depending from the circular plate **18*b*** of head **18** is conduit **18*c*** which forms a clean air exhaust passage **33** from the inner cyclone **20**. Exhaust passage **33** is in communication through head **18**

with the upper half of clean air exhaust passage **28** (FIG. **3**) which is formed by tube **34** mounted on the outside wall **18***a* of the head **18**. The lower part of tube **34** leads to a rigid lower exhaust tube (not shown) which is mounted on the outside wall **15***b* of the outer cyclone **15**. The lower exhaust tube (not shown) forms the lower half of clean air exhaust passage **28** and connects to a clean air exhaust outlet (not shown) in the casing **12** which cools the motor fan unit and exhausts at casing vents **12***b* below skirt **16** as shown in FIG. **1**.

The inner cyclone **20** has a frusto-conical body extending radially downwardly and inwardly to the axis a—a and an inlet scroll **36**. The inner cyclone **20** comprises an inner wall **20***a* leading to a cone opening **20***b* and an outer surface **20***c* of the inner wall **20***a*. The inlet scroll **36** comprises a horizontal web **37** (FIG. **6**) which extends from the upper end surface **20***d* of the inner cyclone **20** to the inner surface **18***d* of the head **18**. A sleeve **38** extends through the majority of its length from the junction of the upper end surface **20***d* of the inner cyclone **20** and web **37** to the bottom side of plate **18***b*. A second horizontal web **39** extends from the upper end **38***a* of sleeve **38** to the junction where the inside wall **18***d* of head **18** meets plate **18***b*. A portion **38***b* (FIG. **4**) of sleeve **38** extends in the form of a spiral, from the junction of the upper end surface **20***d* of the inner cyclone **20** and the web **37** to the inside wall **18***d* of the head **18** thereby completing the inlet scroll **36** and providing a tangential entry to the inner cyclone **20** in order to be capable of setting up a swirling cyclonic flow of air.

The cone opening **20***b* of the inner cyclone **20** is connected to a dirt collecting receiver **40** for collecting dirt from the inner cyclone **20**. The lower end of the outer surface **20***c* the inner cyclone **20** engages a circular plate **40***a* which meets a frusto-conical member **40***b* that tapers downwardly and outwardly from the axis a—a. The lower edge of frusto-conical member **40***b* meets the upper edge of a short cylindrical member **40***c* of the receiver **40**. Interposed between the inner cyclone **20** and the plate **40***a* of receiver **40** is a flexible annular sealing member **41**. Depending from the bottom edge of the cylindrical member **40***c* is the frusto-conical section **40***d* which forms the bottom wall of the outer cyclone **15** and which extends downwardly and outwardly from the axis a—a to the inner surface **15***a* of outer cyclone **15** about 1.1 inches (2.7 cm) above the bottom wall **40***e* of receiver **40**. The diameter of the cone opening **20***b* is preferably at least three times the diameter of frusto-conical section **40***d*, as described in U.S. Pat. No. 4,826,515.

FIG. 2A shows another preferred version of the connection between the cone opening **20***b* of the inner cyclone **20** and a receiver **140** which is similar to receiver **40**. The receiver **140** is formed of a frusto-conical section **140***a* secured directly to the cone opening **20***b* through inverted U-shaped annular seal **141***a*. The frusto-conical section **140***a* tapers downwardly and outwardly from the axis b—b to an inner annular ring member **140***b*. A bottom plate **140***c*, circular in plan view, extends to and meets a first frusto-conical member **140***d* which tapers upwardly and outwardly from the axis b—b. The upper edge of the first frusto-conical member **140***d* meets a first cylindrical member **140***e* which extends to and meets a second frusto-conical member **140***f*. The second frusto-conical member **140***f* tapers upwardly and outwardly from the axis b—b to a second cylindrical member **140***g*. The second cylindrical member **140***g* seals against the inner surface **16***a* of skirt **16** through annular ring seal **141***b*. The receiver **140** is completed by annular ring seal **141***c* which is disposed between the inner annular ring member **140***b* and the second cylindrical member **140***g* thereby sealing the outer cyclone **15** from the receiver **140**.

A combined shroud and disc unit **50** is mounted intermediate the passage **32** leading to inlet scroll **36** and the cone opening **20***b* as particularly shown in FIG. **2**. The upper part of the unit **50** is tapered with wall **50***a* preferably parallel to the outer surface **20***c* of the inner cyclone **20** and forming passage **52**. The wall **50***a* ends in a flange **50***b* which surrounds and encloses the inlet passage **32** to the inner cyclone **20**. Cylindrical section **50***c* depends from the lower end of wall **50***a* to an annular web **50***d*. A plurality of openings **50***e* (partially shown in FIG. **5**) that are in and around the circumference of the cylindrical section **50***c*, serve as an outlet from the outer cyclone **15** to passage **51** leading to passage **52**. Web **50***d* extends between the cylindrical section **50***c* and the outer surface **20***c* of the inner cyclone **20** where it meets conical member **50***f* leading to a cylindrical section **50***g*. Depending from the cylindrical section **50***g* is a disc **50***h* which can be conically shaped with a large downwardly tapered portion **50***i* facing the bottom wall **40***d* of the outer cyclone **15**. The disc **50***h* can have a downwardly inclined angle alpha between about 97½° to 110° from the axis a—a or 7½° to 20° from a line perpendicular to the axis a—a. The disc **50***h* can also be perpendicular to the axis a—a (not shown).

FIG. 2B shows another version of the combined shroud and disc unit **150** that fits over the outer surface **20***c* of the inner cyclone **20**, inside of head **18** and the outer cyclone **15**, similar to the shroud and disc unit **50** shown in FIG. **2**. The upper part of the unit **150** if formed by a frusto-conical section **150***a* that tapers upwardly and outwardly from the axis e—e to a flange **150***b*. A cylindrical section **150***c* depends from the lower end of the frusto-conical section **150***a* to an annular web **150***d*. A plurality of openings **150***e* that are in and around the circumference of the cylindrical section **150***c*, serve as an outlet from the outer cyclone **15**. Web **150***d* extends between the cylindrical member **150***c* toward the axis e—e and contacts the outer surface **20***c* of the inner cyclone **20**. Web **150***d* meets a conical member **150***f* that together with web **150***d* forms a seal between the inner cyclone **20** and the lower end of the combined shroud and disc unit **150**. Extending from the junction of the cylindrical member **150***c* and the web **150***d* is a disc **150***h* which can be conically shaped with a large downwardly tapered portion **150***i*. The disc **150***h* can have a downwardly inclined angle alpha, between about 97½° to 110° from the axis e—e or 7½° to 20° from a line perpendicular to the axis e—e. The disc **150***h* can also be perpendicular to the axis e—e (not shown).

FIG. 2C shows still another version of the shroud unit **250** that fits over the outer surface **20***c* of the inner cyclone **20**, inside of head **18** and the outer cyclone **15**, similar to the shroud and disc unit **50** shown in FIG. **2**. The upper part of the unit **250** is formed by a frusto-conical section **250***a* that tapers upwardly and outwardly from the axis f—f to a flange **250***b*. A cylindrical section **250***c* depends from the lower end of the frusto-conical section **250***a* to an annular web **250***d*. A plurality of openings **250***e* that are in and around the circumference of the section **250***c*, serve as an outlet from the outer cyclone **15**. Web **250***d* extends between the cylindrical member **250***c* toward the axis f—f where it

contacts the outer surface **20c** of the inner cyclone **20** similar to web **150d** of the shroud and disc unit **150** in FIG. 2B. Web **250d** meets a conical member **250f** that together with web **250d** forms a seal between the inner cyclone **20** and the lower end of the combined shroud and disc unit **150**. The combined shroud and disc unit **250** does not have a disc to help keep large dirt particles and fibrous matter in the outer cyclone **15** as is characteristic of the shroud and disc unit **50** in FIG. 2 and the shroud and disc unit **150** in FIG. 2B.

In operation of the preferred version of the upright type vacuum cleaning apparatus **10** as shown in FIG. 2, the fan unit in casing **12** pulls air into dirty air inlet passage **27** through tubes **29** and **30** and into inlet passage **31** leading to the outer cyclone **15**. The air cyclones down and around the inner surface **15a** and bottom wall **40d** of outer cyclone **15**, over the outside of walls **40c**, **40b** and **40a** of the receiver **40** and up the outer surface **20c** of the inner cyclone **20**, then over the disc **50h**, through openings **50e** and up passages **51** and **52** defined by the shroud **50** and the outer surface **20c** of the inner cyclone **20**. The air then moves into passage **32** before entering the inlet scroll **36** leading to the inner cyclone **20** where the air cyclones down the inner wall **20a** to the cone opening **20b** before moving upward to the exhaust passage **33** formed by conduit **18c**. The air finally moves to the clean air exhaust passage **28** defined by tube **34** and a lower exhaust tube (not shown) adjacent to the outside wall **15b** of the outer cyclone **15** before exhausting to the atmosphere or to the motor fan unit in the casing **12**. The dirt collects on the bottom wall **40d** of the outer cyclone **15** and on the bottom wall **40e** of the receiver **40** as shown in FIG. 2. Finer dirt collects primarily in the receiver **40**.

It was suprising that the openings **50e** in the cylindrical section **50c** (FIG. 2) could be positioned closely adjacent to the inner surface **15a** of the outer cyclone **15**. During testing, it had been thought that the cylindrical section **50c** should be as distant as possible from the dirt swirling around the inner surface **15a** of the outer cyclone **15**. It had been felt that a large distance between the cylindrical section **50c** and the inner surface **15a** of the outer cyclone **15** would make it difficult for dirt, fluff or fibrous material to become caught up in the airflow exiting the outer cyclone **15** through the openings **50e** in cylindrical section **50c**. However, with the cylindrical section **50c** set as far away as possible from the inner surface **15a** of the outer cyclone **15**, fluff and fibrous material became trapped on the outer surface **50k** of the cylindrical section **50c**. Surprisingly, it was found that by positioning the cylindrical section **50c** closely adjacent to the inner surface **15a** of the outer cyclone **15** that the outer surface **50k** of the cylindrical section **50c** did not attract fibrous material and that dirt did not pass directly from the airflow circulating around the inner surface **15a** of the outer cyclone **15** to the openings **50e** in cylindrical member **50c**. In fact, the outer surface **50k** of the cylindrical member **50c** was apparently being wiped clean by the airflow circulating around the inner surface **15a** of the outer cyclone **15**. With this construction, the dirt can accumulate to a relatively high level in the outer cyclone **15** (about level L) with good separation of the dirt.

As shown in FIG. 2A, the outer cyclone **15** and receiver **40** (not shown) or receiver **140** are removable from the head **18** for emptying by releasing a spring catch **55** housed within the skirt **16**. The catch **55** comprises a central spring arm member **55a** that attaches at its proximal end **55b** to the bottom surface **140h** of the bottom plate **140c** of the receiver **140** through mounting bracket **140i**. The distal end **55c** of the spring arm **55a** forms into a first inverted U-shaped member **55d**. The spring arm **55a** and a proximal leg **55e** of the first inverted U-shaped member **55d** form a U-shaped junction **55f** that secures in a mating locking member **12c** mounted on the casing **12**. A distal leg **55g** of the first inverted U-shaped member **55d** acts as a finger grip that protrudes out from underneath the skirt **16** adjacent to the casing **12**. A second inverted U-shaped guide member **140j** is mounted on the bottom surface **140h** of the bottom plate **140c** of the receiver **140** spaced apart from mounting bracket **140i** and adjacent to the apex of the first inverted U-shaped member **55d**. The second inverted U-shaped member **140j** serves as a guide for an arrow tab **55h** extending from the first inverted U-shaped member **55d** of the catch **55** which helps to secure the receiver **140** and outer cyclone **15** to the head **18** and the inner cyclone **20** when the vacuum cleaning apparatus **10** is being used.

When the outer cyclone **15** and receiver **140** become full of accumulated dirt, the operator lifts up on the distal leg **55g** of the first inverted U-shaped member **55d** which releases the junction **55f** of catch **55** from the locking member **12c** and the arrow tab **55h** from the second inverted U-shaped member **140j**. The operator then pulls the outer cyclone **15**, receiver **140** and skirt **16** away from the handle **21** (FIG. 1) which causes the annular lip member **15c** of the outer cyclone **15** to release from the head **18** at the flexible inverted L-shaped seal **19** and the receiver **140** to release from the inner cyclone **20** at the annular seal **141a**, thereby exposing the rigid tube **29**, the rigid lower exhaust tube (not shown) and the bottom part of the intermediate pipe **21**. The outer cyclone **15** and receiver **140** can then be emptied and replaced into the vacuum cleaning apparatus **10** by fitting annular lip member **15c** of the outer cyclone **15** inside of the flexible inverted L-shaped seal **19** and by fitting annular seal **141a** around the cone opening **20b** of the inner cyclone **20**. The operator then pushes the outer cyclone **15** and receiver **140** towards the pipe **21** until the junction **55f** of catch **55** locks into locking member **12c** of casing **12** and arrow tab **55h** secures into U-shaped member **140j**.

FIG. 7 shows a tank type vacuum cleaning apparatus **110**, which comprises an outer cyclone **111**, around an inner cyclone **112**, a dirt collection receiver **113** and a motor driven fan unit **114**. The inner and outer cyclones **111** and **112** have circular cross-sections along a longitudinal axis c—c. The outer cyclone **111** has a base **111a** and a cylindrical inner surface **111b** which extends from the outer periphery of the base **111a**. A circular cross-sectioned flange **111c** extends radially outwardly from the upper end part of the outside wall **111d** of the outer cyclone **111** and serves as one-half of a seal for the outer cyclone **111**.

A removable cover **115** with hemispherical outer surface **115a** fits over the top of the outer cyclone **111**. The lower edge of the outer surface **115a** of cover **115** has an annular rim **115b** with a depending lip **115c** which serves as a hand grip for removing the cover **115** from the outer cyclone **111**. Extending inward from rim **115b** toward the axis a—a is a horizontal support web **115d** which meets the upper edge of a right angle cross-sectioned protrusion **115e**. An annular gasket **116** is mounted intermediate the protrusion **115e** and the rim **115b** on web **115d** so as to be in contact with the circular

cross-sectioned flange **111***c*. The gasket **116** serves to seal the cover **115** to the outer cyclone **111** while the apparatus **110** is in operation. The lower edge of the protrusion **115***e* meets the top edge of a frusto-conical section **115***f* which tapers radially inwardly and downwardly toward the axis c—c. An annular ring member **115***g* depends from the distal end of the conical section **115***f* and has openings **115***h* for bolts **117**. Openings **115***i* are provided on the hemispherical outer surface **115***a* which serve as an exhaust port for the motor fan unit **114**.

A cylindrical dirty air inlet passage **118** communicates through the upper part of the outside wall **111***d* of the outer cyclone **111**. The end part **118***a* of the dirty air inlet passage **118**, remote from the outer cyclone **111**, is joined by a flexible tube (not shown) to a cleaner head (not shown) for contacting a dirty surface. Flanged section **118***b* of inlet passage **118**, adjacent to the outside wall **111***d* of the outer cyclone **111**, has openings **119** for bolts **120** to secure the inlet passage **118** to the outside wall **111***d* of the outer cyclone **111**. Inlet passage **118** leads to a dirty air inlet passage **121**. As long as inlet passage **121** communicates through the upper part of the outside wall **111***d* of the outer cyclone **111** so as to make a tangential entry and to set up a swirling, cyclonic flow of air in the outer cyclone **111**, the exact position of the inlet passage **121** around the circumference of the outer cyclone **111** is not critical.

A plate **124**, circular in plan view, with dependent tube **125** centered around the axis c—c is positioned above the inner cyclone **112**. The dependent tube **125** extends downwardly along axis c—c from the plate **124** substantially coaxially with the inner cyclone **112**. The motor driven fan unit **114** is located on the plate **124** and is arranged so as to draw air from the inner cyclone **112** through dependent tube **125**. Extending from the top side **124***a* of the plate **124** is annular ring member **124***b* which is outside of and adjacent to the depending ring member **115***g*. Annular ring **124***b* has openings **126**, centered on the axis d—d coinciding with the openings **115***h* in the depending ring member **115***g*, which enables bolts **117** to secure the cover **115** to the plate **124**.

The inner cyclone **112** has a frusto-conical body extending radially downwardly and inwardly towards the axis c—c and a dependent inlet scroll **127**. The inner cyclone **112** comprises a frusto-conical inner surface **112***a* leading to a cone opening **112***b* and an outside wall **112***c*. The inlet scroll **127** comprises the sleeve **123** which depends from the plate **124** to a horizontal annular web **128** (FIGS. **7** and **8**). The web **128** extends between the upper end **112***d* of the frusto-conical body and the lower end part of sleeve **123**. A second dependent sleeve **129** extends between the cover **124** and the junction of the upper end **112***d* of the frusto-conical body and the web **128**. The second sleeve **129** is located radially inwardly of the tubular sleeve **123** and through the majority of its length sleeve **129** extends from the upper end **112***d* of the frusto-conical body where the upper end **112***d* joins the inner periphery of the web **128**. As shown in FIG. **8**, a portion **130** of the second sleeve **129** extends, in the form of a spiral, from the junction of the upper end **112***d* of the frusto-conical body and the web **128** to the tubular sleeve **123** thereby completing the inlet scroll **127** and providing a tangential entry to the inner cyclone **112** in order to be capable of setting up a swirling cyclonic flow of air.

FIG. **8**A shows another version of the inlet scroll **127** where two diametrically opposed sections **130***a* and **130***b* extend from the junction of the upper end **112***d* of the frusto-conical body and the web **128** to the tubular sleeve **123**. In this manner, the inner cyclone **112** is provided with two opposed tangential entry points which are capable of setting up a swirling, cyclonic flow of air. It should be noted, that the inlet scroll **127** can be completed by any number of sections **130** spiraling radially outwardly from the sleeve **129** to the tubular sleeve **123** as long as the sections **130** create a tangential entry point to the inner cyclone **112**.

Depending from the scroll **127** and spaced from the outside wall **112***c* of the inner cyclone **112** is a shroud **131** which comprises of tubular ring **132** that depends from the junction of the tubular sleeve **123** and the web **128**. The ring **132** of shroud **131** is totally perforated with a plurality of openings **133** (partially shown in FIG. **9**) that serve as an air outlet from the outer cyclone **111** to scroll **127** leading into the inner cyclone **112**. The tubular ring **132** is parallel to and purposely spaced from the inner surface **111***b* of the outer cyclone **111**. The shroud **131** is completed by a web **134** that extends between the lower end portion of ring **132** and the outside wall **112***c* of the inner cyclone **112** and a cylindrical support member **135** that depends from the outside wall **112***c* of the inner cyclone **112** and which with the upper surface **134***a* of the web **134** forms a right angle closure from the outer cyclone **111** at an intermediate seal **136**.

The dirt collection receiver **113** for the inner cyclone **112** comprises a cylindrical portion **113***a* which meets the upper edge of a frusto-conical section **113***b* extending downwardly and outwardly from the axis c—c to the base **111***a* of outer cyclone **111**. Adjacent to and radially inward from frusto-conical section **113***b* is an annular ring member **111***e* of the outer cyclone **111** which extends beyond the upper edge of frusto-conical section **113***b* adjacent to the inside wall **113***c* of the receiver **113**, thus forming a seal between the receiver **113** and the outer cyclone **111**. The cylindrical portion **113***a* is intermediate the inner surface **111***b* of the outer cyclone **111** and the outside wall **112***c* of the inner cyclone **112** and is below the web **134** of the shroud **131**. The receiver **113** is completed by a rubber seal **137** that extends from the top of the cylindrical portion **113***a* to the outside wall **112***c* of the inner cyclone **112** adjacent to the web **134**. In another embodiment (not shown), cylindrical portion **113***a* can meet and seal against the web **134** of the shroud **131**.

The following are parameters for the preferred vacuum cleaner:

1. Number of Holes in Shroud

In the preferred version of the upright type vacuum cleaning apparatus **10**, as shown in FIG. **2**, and the preferred version of the tank type vacuum cleaning apparatus **110** as shown in FIG. **7**, there should be approximately the number and size of openings or holes **50***e* in the cylindrical section **50***c* of the shroud and disc unit **50** and openings **133** in the tubular ring **132** shroud **131** to position the pressure between the inner surface **50***j* and the outer surface **50***k* of the cylindrical section **50***c* and to position the pressure through the ring **132** of shroud **131** as far along from the pressure increase rise of the graph (FIG. **10**) as possible. It was found that if there was a high differential pressure through the cylindrical section **50***c* and through the ring **132** of shroud **131** that large dirt particles that collect in the outer cyclones **15** and **111** when the dirt level in the outer cyclones **15** and **111** is below level L, will be pulled

through the openings **50***e* in cylindrical section **50***c* and the openings **133** in the tubular ring **132** of shroud **131** where they will then enter the inner cyclones **20** and **112**. The high differential pressure probably causes large particles and fluff to attach to and block the openings **50***e* in the cylindrical section **50***c* of the shroud and disc unit **50** and the openings **133** in the tubular ring **132** of shroud **131**. This result is undesirable because the large dirt particles will not separate out in the inner cyclones **20** and **112**. Instead, the large dirt particles will be expelled out the exhaust passage **33** of the inner cyclone **20** and through dependent tube **125** exhausting from the inner cyclone **112** where the large dirt particles will then be drawn into the motor fan units **14** and **114**. This will damage the motor fan units **14** and **114** and can also result in dirt being expelled into the atmosphere.

The above discussion is also applicable for the pressure between the inside surface **150***j* and the outside surface **150***k* of the cylindrical section **150***c* (FIG. 2B) and for the pressure between the inside surface **250***j* and the outside surface **250***k* of the cylindrical section **250***c* (FIG. 2C).

The circumference of the cylindrical section **50***c* of shroud and disc unit **50** in FIG. **2** was 13.6 inches (34.5 cm), the diameter was 4.3 inches (10.9 cm), and the height was 2.6 inches (6.6 cm). Where there were approximately 58 holes per row, a combination lying in the range of 32 to 38 rows of holes of 2.2 mm diameter were found to be best for the cylindrical section **50***c* of the shroud and disc unit **50** of the cleaning apparatus **10** shown in FIGS. **1** and **2**. Also, the circumference of the ring **132** of the shroud **131** of the tank type vacuum cleaning apparatus **110** shown in FIG. **7** was 15.5 inches (64.8 cm), the diameter was 8.2 inches (20.8 cm), and the height was 2.5 inches (6.4 cm). Where there were approximately 208 holes per row, a combination lying on the range of 34 to 38 rows of holes of 2.2 mm diameter were found to be best for the ring **132** of the shroud **131**. A 2.2 mm diameter hole is sufficiently small to block the passage of particles of a greater size than would be successfully separated by the inner cyclone **20** of FIG. **2** and the inner cyclone **112** of FIG. **7**.

It was believed that the greater the total area of holes **50***e* and **133** the less pressure there would be at each hole. This is beneficial because the cylindrical section **50***c* and the ring **132** of the shroud **131** would be better at not attracting fluff. Also, a lower pressure at each opening **50***e* of the upright type vacuum cleaning apparatus **10** and at each opening **133** of the ring **132** of the shroud **131** of the tank type vacuum cleaning apparatus **110** would make it easier for fine dirt to gather at and maybe block rather than be drawn through the openings **50***e* and **133**, thereby signalling the operator that it is time to empty the respective vacuum cleaners **10** and **110**.

2. Thickness of Material for the Shroud

It was found that better results were obtained when material at least 2 mm thick was used for the shrouds **50** and **131** . Material 1 mm thick did not work as well. It was assumed that the thicker material causes a sharper change in direction for the clean air and therefore contributes to a better separation than is achieved by the thinner material.

3. Distance Between the Shroud and the Inner Surface of the Outer Cyclone

For the upright type vacuum cleaner **10** in FIG. **1** and **2**, the distance range between the cylindrical section **50***c* of the shroud and disc unit **50** and the inner surface **15***a* of the outer cyclone **15** is preferably between 0.59 inches to 1.18 inches (1.5 cm to 3.0 cm). For the tank type vacuum cleaning apparatus **110** in FIG. **7**, the distance range between the ring **132** of the shroud **131** and the inner surface **111***b* of the outer cyclone **111** is preferably between 0.75 inches to 1.26 inches (1.9 cm to 3.2 cm). However, if the distance between the cylindrical section **50***c* of the shroud and disc unit **50** is too close, fluff will bridge between the disc **50***h* and the inner surface **15***a* of the outer cyclone **15**. Alternatively, if the distance is too great, fluff attaches to the cylindrical section **50***c* and blocks the openings **50***e*. The exact distances is dependent on the diameter of the outer cyclone and the inner cyclone of the respective vacuum cleaning apparatus **10** and **110**.

It is intended that the foregoing description be only illustrative of the present invention and that the present invention be limited only to the hereinafter appended claims.

I claim:

1. In a cleaning apparatus including a container comprising a bottom and a sidewall extending to and meeting the bottom, the sidewall having an interior surface, a dirty air inlet which is oriented for supplying dirt laden air into the container tangentially to the interior surface of the container which has a circular cross-section and an air outlet from the container; a cross-sectioned cyclone having a longitudinal axis mounted inside the container, the cyclone comprising a cyclone air inlet at an upper end having a first diameter of the cyclone in air communication with the air outlet of the container, an interior dirt rotational surface of the frusto-conical shape for receiving an airflow from the air inlet and for maintaining its velocity to a cone opening smaller in diameter than the diameter of the upper end of the cyclone, the air inlet being oriented for supplying air tangentially to the surface, an outer surface of frusto-conical shape, and a cyclone air outlet communicating with the interior of the cyclone adjacent the upper end of the cyclone; a dirt collecting receiver extending from the cone opening; and means for generating an airflow which passes sequentially through the dirty air inlet, the container, the cyclone air inlet, the cyclone, the dirt receiver and the cyclone air outlet, and airflow rotating around the frusto-conical interior surface of the cyclone and depositing the dirt in the receiver the improvement which comprises:

(a) a shroud means mounted on and around the outer surface of the cyclone, having opposed ends along the longitudinal axis and providing an air outlet from the container into the air inlet to the cyclone, wherein a portion of the shroud means has a cylindrical section between the ends with perforations around the cylindrical section which allow for the flow of the air from the container to the cyclone air inlet and which is spaced from and parallel to the inside wall of the container with one of the ends of the shroud means closed by the outer surface of the cyclone and wherein the airflow circulating around the interior surface of the container wipes an outer surface of the cylindrical section around the perforations clean so that the flow of the air from the container to the cyclone inlet is not restricted by dirt accumulating at the perforations in the cylindrical section as dirt is being accumulated in the container.

2. The apparatus of claim 1 wherein there are a large number of the perforations through the cylindrical section so as to create a low differential pressure between an outside surface and an inside surface of the cylindrical section so that large dirt particles are not drawn through the perforations in the cylindrical section by the flow of air from the container to the cyclone air inlet.

3. The apparatus of claim 2 wherein the cylindrical section of the shroud means is joined to a web means, an inside edge of which contacts the outside wall of the cyclone and an outside edge of which is joined to the cylindrical section and wherein the web means is a first disc means provided at a lower longitudinal extent of the shroud means below the air inlet of the cyclone, wherein the first disc means aids in dirt removal in the container by preventing some of the dirt from flowing into the air inlet to the cyclone.

4. The apparatus of claim 3 wherein the dirty air inlet into the container is provided above the perforations through the cylindrical section of the shroud means.

5. The apparatus of claim 2 wherein the dirty air inlet into the container is provided above the perforations through the cylindrical section of the shroud means.

6. The apparatus of claim 2 wherein the shroud means has a flanged section above the cylindrical section and around the longitudinal axis at an end adjacent the air inlet to the cyclone which is in a closely spaced relationship to the outside wall of the cyclone so as to provide a chamber leading to the air inlet to the cyclone.

7. The apparatus of claim 3 wherein a second disc means is provided at a lower longitudinal extent of the shroud means, below the air inlet of the cyclone and the first disc means, and around the axis of the cyclone with a space between the interior surface of the container and the second disc means for passage of air, wherein the second disc means aids in dirt removal in the container by preventing some of the dirt from flowing into the air inlet to the cyclone.

8. The apparatus of claim 7 wherein the second disc means is circular in cross-section around the longitudinal axis of the cyclone.

9. The apparatus of claim 7 wherein the second disc means has a conical shape around the shroud means such that a larger portion of the conical shape faces towards the bottom of the container.

10. The apparatus of claim 7 wherein the conical shape when viewed as a cross-section of the shroud means and second disc means through the longitudinal axis is at a downwardly inclined angle of about 7½ to 20° from a line perpendicular to the longitudinal axis of the cyclone.

11. The apparatus of claim 7 wherein the second disc means is positioned about one-third of the distance between the cone opening and the air inlet of the cyclone.

12. The apparatus of claim 2 wherein the dirt receiver is mounted on the outer surface of the cyclone and has a conical portion adjacent the bottom of the container which tapers outwardly towards the sidewall and the bottom of the container.

13. The apparatus of claim 12 wherein the dirt receiver has a cylindrical portion which extends from an outer edge of a circular plate portion, an inner edge of which contacts the outside surface of the cyclone adjacent the cone opening wherein the cylindrical portion extends to the conical portion.

14. The apparatus of claim 13 wherein the web means is a first disc means provided at a lower longitudinal extent of the shroud means below the air inlet of the cyclone, wherein the first disc means aids in dirt removal in the container by preventing some of the dirt from flowing into the air inlet to the cyclone and wherein the cylindrical portion of the dirt receiver has a diameter smaller than a diameter of a second disc means, the second disc means provided at a lower longitudinal extent of the shroud means, below the air inlet of the cyclone and the first disc means, and around the axis of the cyclone with a space between the interior surface of the container and the second disc means for passage of air, wherein the second disc means aids in dirt removal in the container by preventing some of the dirt from flowing into the air inlet to the cyclone.

15. The apparatus of claim 2 wherein the container has a substantially cylindrical sidewall.

16. The apparatus of claim 2 as an upright type vacuum cleaner with a handle wherein the airflow generating means is mounted in a casing that supports the container, cyclone and dirt receiver and wherein the floor engaging cleaner head contacts a surface to be cleaned and an airflow control cover is mounted on an open end of the container for directing airflow of dirt-laden air into the container and for directing airflow out of the outlet from the cyclone.

17. The apparatus of claim 16 wherein the casing is provided with two sets of wheels for moving the vacuum cleaning apparatus which set of wheels are mounted on opposed sides of the airflow generating means.

18. The apparatus of claim 16 wherein separate tubes are mounted on the outside of the container parallel to the longitudinal axis of the container and wherein the separate tubes are on opposed sides of and in a closely spaced relationship to the handle wherein said tubes are in airflow communication with the cover so that one tube serves as a dirty air inlet to the container and wherein clean air from the cyclone is removed through the other tube and is used to cool the airflow generating means.

19. The apparatus of claim 7 wherein the shroud means and the second disc means form an integral unit which slides over the outside surface of the cyclone such that the cone opening protrudes below and out of the unit and wherein a lower section of the shroud means depending from a radius of the first disc means of the shroud means supports the second disc means and is in a sealed relationship with the outside wall of the cyclone so that the airflow in the container must travel over the second disc means and past an outside surface of a lower section of the shroud means before passing through the perforations in the cylindrical section leading to the air inlet to the cyclone.

20. The apparatus of claim 19 wherein the perforations through the cylindrical section are circular and are provided around a circumferential extent of the cylindrical section of the shroud means.

21. The apparatus of claim 19 wherein there are a large number of the perforations through the cylindrical section so as to create a low differential pressure between an outside surface and an inside surface of the cylindrical section so that dirt is not drawn through the cylindrical section by the flow of air from the container to the cyclone air inlet.

22. The apparatus of claim 19 wherein the perforated section of the shroud means is between 0.59 inches and 1.38 inches (1.5 cm and 3.5 cm) from the inside wall of the container.

23. The apparatus of claim 19 wherein the shroud means has a flanged section above the cylindrical section and around the longitudinal axis at an end adjacent the air inlet to the cyclone which is in a closely spaced relationship to the outside wall of the cyclone so as to provide a chamber leading to the air inlet to the cyclone.

24. A shroud means for use in a cleaning apparatus including a container comprising a bottom and a sidewall extending to and meeting the bottom, the sidewall having an interior surface, a dirty air inlet which is oriented for supplying dirt laden air into the container tangentially to the interior surface of the container which has a circular cross-section and an air outlet from the container; a circular cross-sectioned cyclone having a longitudinal axis mounted inside the container, the cyclone comprising a cyclone air inlet at an upper end having a first diameter of the cyclone in air communication with the air outlet of the container, an interior dirt rotational surface of frusto-conical shape for receiving an air flow from the air inlet and for maintaining its velocity to a cone opening smaller in diameter than the diameter of the upper end of the cyclone, the air inlet being oriented for supplying air tangentially to the surface, an outer surface of frusto-conical shape, and a cyclone air outlet communicating with the interior of the cyclone adjacent the upper end of the cyclone; a dirt collecting receiver extending from the cone opening; and means for generating an airflow which passes sequentially through the dirty air inlet, the cover, the container, the cyclone air inlet, the cyclone, the dirt receiver and the cyclone air outlet, the airflow rotating around the frusto-conical interior surface of the cyclone and depositing the dirt in the receiver the improvement which comprises:

(a) the shroud means mounted on and around the outer surface of the cyclone, having opposed ends along the longitudinal axis and providing an air outlet from the container into the air inlet to the cyclone, wherein a portion of the shroud means has a cylindrical section with a large number of perforations around the cylindrical section, spaced from the inside wall of the container which results in a low differential pressure being created between an outside surface and an inside surface of the cylindrical section that keeps dirt from being drawn through the perforations in the cylindrical section by the flow of air from the container to the cyclone air inlet with one of the ends of the shroud means closed by the outer surface of the cyclone and wherein the airflow circulating around the interior surface of the container wipes the outside surface of the cylindrical section around the perforations clean so that the flow of the air from the container to the cyclone inlet is not restricted by dirt accumulating at the perforations in the cylindrical section as dirt is being accumulated in the container.

25. A shroud means for use in a cleaning apparatus including a container comprising a bottom and a sidewall extending to and meeting the bottom, the sidewall having an interior surface, a dirty air inlet which is oriented for supplying dirt laden air into the container tangentially to the interior surface of the container which has a circular cross-section and an air outlet from the container; a circular cross-sectioned cyclone having a longitudinal axis mounted inside the container, the cyclone comprising a cyclone air inlet at an upper end having a first diameter of the cyclone in air communication with the air outlet of the container, an interior dirt rotational surface of frusto-conical shape for receiving an air flow from the air inlet and for maintaining its velocity to a cone opening smaller in diameter than the diameter of the upper end of the cyclone, the air inlet being oriented for supplying air tangentially to the surface, an outer surface of frusto-conical shape, and a cyclone air outlet communicating with the interior of the cyclone adjacent the upper end of the cyclone; a dirt collecting receiver extending from the cone opening; and means for generating an airflow which passes sequentially through the dirty air inlet, the cover, the container, the cyclone air inlet, the cyclone, the dirt receiver and the cyclone air outlet, the airflow rotating around the frusto-conical interior surface of the cyclone and depositing the dirt in the receiver the improvement which comprises:

(a) the shroud means mounted on and around the outer surface of the cyclone, having opposed ends along the longitudinal axis and providing an air outlet from the container into the air inlet to the cyclone, wherein a portion of the shroud means has a cylindrical section with perforations around the cylindrical section which allow for the flow of the air from the container to the cyclone inlet and which is spaced from and parallel to the inside wall of the container with one of the ends of the shroud means closed by the outer surface of the cyclone and wherein the airflow circulating around the interior surface of the container wipes an outer surface of the cylindrical section around the perforations clean so that the flow of the air from the container to the cyclone inlet is not restricted by dirt accumulating at the perforations in the cylindrical section as dirt is being accumulated in the container.

26. A shroud means for use in a cleaning apparatus including a container comprising a bottom and a sidewall extending to and meeting the bottom, the sidewall having an interior surface, a dirty air inlet which is oriented for supplying dirt laden air into the container tangentially to the interior surface of the container which has a circular cross-section and an air outlet from the container; a circular cross-sectioned cyclone having a longitudinal axis mounted inside the container, the cyclone comprising a cyclone air inlet at an upper end having a first diameter of the cyclone in air communication with the air outlet of the container, an interior dirt rotational surface of frusto-conical shape for receiving an airflow from the air inlet and for maintaining its velocity to a cone opening smaller in diameter than the diameter of the upper end of the cyclone, the air inlet being oriented for supplying air tangentially to the surface, an outer surface of frusto-conical shape, and a cyclone air outlet communicating with the interior of the cyclone adjacent the upper end of the cyclone; a dirt collecting receiver extending from the cone opening; and means for generating an airflow which passes sequentially through the dirty air inlet, the container, the cyclone air inlet, the cyclone, the dirt receiver and the cyclone air outlet, the airflow rotating around the frusto-conical interior surface of the cyclone and depositing the dirt in the receiver the improvement which comprises:

the shroud means mounted on and around the outer surface of the cyclone, having opposed ends along the longitudinal axis and providing an air outlet from the container into the air inlet to the cyclone,

wherein a portion of the shroud means has a cylindrical section with perforations around the cylindrical section which allow for the flow of the air from the container to the cyclone inlet and which is spaced from and parallel to the inside wall of the container with the cylindrical section joined to a web means, an inside edge of which contacts the outside wall of the cyclone and an outside edge of which is joined to the cylindrical section and wherein the airflow circulating around the interior surface of the container wipes an outer surface of the cylindrical section around the perforations clean so that the flow of the air from the container to the cyclone inlet is not restricted by dirt accumulating at the perforations in the cylindrical section as dirt is being accumulated in the container.

27. The shroud means of claim **26** wherein the perforations through the cylindrical section are circular and are provided around a circumferential extent of the cylindrical section of the shroud means.

28. The apparatus of claim **26** wherein there are a large number of the perforations through the cylindrical section so as to create a low differential pressure between an outside surface and an inside surface of the cylindrical section so that dirt is not drawn through the cylindrical section by the flow of air from the container to the cyclone air inlet.

29. The apparatus of claim **26** wherein the perforated section of the shroud means is between 0.59 inches and 1.38 inches (1.5 cm and 3.5 cm) from the inside wall of the container.

30. The shroud means of claim **26** wherein the shroud means has a flanged section above the cylindrical section and around the longitudinal axis at an end adjacent the air inlet to the cyclone which is in closely spaced relationship to the outside of the cyclone so as to provide a chamber leading to the inlet to the cyclone.

31. The shroud of claim **26** wherein the web means is a first disc means provided at a lower longitudinal extent of the shroud means below the air inlet of the cyclone, wherein the first disc means aids in dirt removal in the container by preventing some of the dirt from flowing into the air inlet to the cyclone.

32. The shroud means of claim **31** wherein a second disc means is provided at a lower longitudinal extent of the shroud means, below the air inlet of the cyclone and the first disc means, and around the axis of the cyclone with a space between the interior surface of the container and the second disc means for passage of air, wherein the second disc means aids in dirt removal in the container by preventing some of the dirt from flowing into the air inlet to the cyclone.

33. The shroud means of claim **32** wherein the shroud means and the second disc means form an integral unit which slides over the outside surface of the cyclone such that the cone opening protrudes below and out of the unit and wherein a lower section of the shroud means depending from a radius of the first disc means of the shroud means supports the second disc means and is in sealed relationship with the outside wall of the cyclone so that the airflow in the container must travel over the second disc means and past an outside surface of a lower section of the shroud means before passing through the perforations in the cylindrical section leading to the air inlet to the cyclone.

34. The shroud means of claim **32** wherein the perforations through the cylindrical section are circular and are provided around the circumferential extent of the cylindrical section of the shroud means which is parallel to the inside wall of the container.

35. The apparatus of claim **32** wherein there are a large number of the perforations through the cylindrical section so as to create a low differential pressure between an outside surface and an inside surface of the cylindrical section so that dirt is not drawn through the cylindrical section by the flow of air from the container to the cyclone air inlet.

36. The apparatus of claim **26** wherein the dirty air inlet into the container is provided above the perforations through the cylindrical section of the shroud means.

37. In a cleaning apparatus including a container comprising a bottom and a sidewall extending to and meeting the bottom, the sidewall having an interior surface, a dirty air inlet which is oriented for supplying dirt laden air into the container tangentially to the interior surface of the container which has a circular cross-section and an air outlet from the container; a cross-sectioned cyclone having a longitudinal axis mounted inside the container, the cyclone comprising a cyclone air inlet at an upper end having a first diameter of the cyclone in air communication with the air outlet of the container, an interior dirt rotational surface of frusto-conical shape for receiving an airflow from the air inlet and for maintaining its velocity to a cone opening smaller in diameter than the diameter of the upper end of the cyclone, the air inlet being oriented for supplying air tangentially to the surface, an outer surface of frusto-conical shape, and a cyclone air outlet communicating with the interior of the cyclone adjacent the upper end of the cyclone; a dirt collecting receiver extending from the cone opening; and means for generating an airflow which passes sequentially through the dirty air inlet, the container, the cyclone air inlet, the cyclone, the dirt receiver and the cyclone air outlet, the airflow rotating around the frusto-conical interior surface of the cyclone and depositing the dirt in the receiver the improvement which comprises:

(a) a shroud means mounted on and around the outer surface of the cyclone, having opposed ends along the longitudinal axis and providing an air outlet from the container into the air inlet to the cyclone, wherein a portion of the shroud means has a cylindrical section between the ends with perforations around the cylindrical section which allow for the flow of the air from the container to the cyclone air inlet and which is spaced from and parallel to the inside wall of the container with the cylindrical section joined to a web means, an inside edge of which contacts the outside wall of the cyclone and an outside edge of which is joined to the cylindrical section and wherein the airflow circulating around the interior surface of the container wipes an outer surface of the cylindrical section around the perforations clean so that the flow of the air from the container to the cyclone inlet is not restricted by dirt accumulating at the perforations in the cylindrical section as dirt is being accumulated in the container.

38. The apparatus of claim **37** wherein the perforations through the cylindrical section are circular and are provided around a circumferential extent of the cylindrical section of the shroud means.

* * * * *