(19) Korean Intellectual Property Office (KR)
(12) Gazette of unexamined utility model (U)

(51) Int. Cl.[6]		**(11) Publication No.**	**Utility Model 1998-020751**
A47L 5/24		**(43) Publication date**	**July 15, 1998**

(21) Application No. Utility Model 1996-033997
(22) Application date October 16, 1996

(71) Applicant MOON, Sinho
102-1501 Hankook Apts., #80 35/3, 110 Unam-dong, Buk-gu, Gwangju
(72) Utility model designer MOON, Sinho
112-2 Singi-dong, Yeocheon-si, Jeollanam-do
(74) Agent LEE, Deokrok

Examination requested: Yes

(54) PISTOL STYLE COMPACT VACUUM CLEANER

Abstract

The present utility model relates to a pistol style compact vacuum cleaner for being able to clean dust stuck in recessed places and narrow gaps easily, such as those in grills in computers, electronic products, and vehicles, and comprises: a main body (10) having a dust collection space (12) furnished on the top of the handle (11); a suction pipe (20) being detachably connected to the dust collection space (12), having a brush (21) installed on the inlet thereof; a suction fan (30) drawing in dust, being installed on the dust collection space (12); a motor (40) driving the suction fan (30); a battery (50) supplying power to the motor (40) being detachably installed into the handle (11); an air discharge port (60) detachably installed on the bottom of the handle (11); and an air filter (70) equipped between the dust collection space (12) and the air discharge port (60).

Representative figure

FIG. 2

Specification

Brief description of figures

FIG. 1 is a perspective view of the present utility model.

FIG. 2 is a longitudinal cross-sectional view of the present utility model.

Description of reference numbers for main parts of figures

10; Main body	11; Handle
12; Dust collection space	20; Suction pipe
21; Brush	30; Suction fan
40; Motor	50; Battery
60; Air discharge port	70; Air filter

Detailed description of utility model

Purpose of utility model

Technical field to which the utility model pertains and background art

The present utility model relates to a pistol style compact vacuum cleaner, and more specifically, to a pistol style compact vacuum cleaner for being able to clean dust stuck in recessed places and narrow gaps easily, such as those in grills in computers, electronic products, and vehicles.

Generally, in conventional technologies for cleaning dust stuck in recessed places and narrow gaps easily, such as those in grills in computers, electronic products, and vehicles, there are drawbacks in that, in the majority of cases, the dust stuck in recessed places must be removed by blowing air, or a wet towel must be placed on the end of a pointy instrument and this used to wipe each and every area.

When dust is removed by blowing air, as described above, the dust flies into the surrounding air, making the area dirty, while having an adverse effect on the respiratory system of the human body, and when wiping with a wet towel, it is not possible to reach the recessed areas, so the water and dust become trapped in those areas, creating a greater concentration of dirt.

Technical problem to be resolved by the utility model

The present utility model has been devised to resolve the abovementioned shortcomings of the conventional technology, and the objective of the present utility model is to provide a pistol style compact vacuum cleaner for being able to clean dust stuck in recessed places and narrow gaps easily, such as those in grills in computers, electronic products, and vehicles.

To achieve the abovementioned objectives, in the present utility model, a suction tube is connected to the dust collection space of a main body having a handle equipped, a suction fan runs by a motor, is installed in the dust collection space, a battery that supplies power to the motor is installed into the handle, and an air discharge port is installed on the bottom of the handle, thereby making the cleaning of recessed areas and narrow gaps easier.

Configuration and action of the utility model

As depicted in FIGS. 1 and 2, a pistol style compact vacuum cleaner of the present utility model comprises: a main body (10) having a dust collection space (12) furnished on the top of the handle (11); a suction pipe (20) being detachably connected to the dust collection space (12), having a brush (21) installed on the inlet thereof; a suction fan (30) drawing in dust, being installed on the dust collection space (12); a motor (40) driving the suction fan (30); a battery (50) supplying power to the motor (40) being detachably installed into the handle (11); an air discharge port (60) detachably installed on the bottom of the handle (11); and an air filter (70) equipped between the dust collection space (12) and the air discharge port (60).

For convenience and ease of use, the exterior of the main body (10) is formed in an approximately compact pistol shape, having a dust collection space (12) furnished at the top that accommodates a suction fan (30), and a motor installation space secured such that a motor (40) may be installed at the rear of the dust collection space (12); a handle (11) furnished with a space that may accommodate an air filter (70) and a battery (50), and, at this time, a switch (41) that turns the motor (40) on and off installed on the front top of the handle (11).

The suction plate (20) guides the drawing in of dust by being detachably connected by a fitting mechanism to the front of the dust collection space (12); the suction tube has a brush (21) installed on the inlet, and this suction tube (20) can be configured such that it may be replaced with separately furnished suction tubes having different inlet sizes, depending on the need.

The suction fan (30) is run by a motor (40) and draws in dust from the outside, and the dust drawn in by way of the suction fan (30) is accommodated in the dust collection space (12).

It is preferred that a powerful motor of approximately 12 V, run at 15,000 RPM, be used for the motor (40).

It is preferred that a rechargeable battery be used for the battery (50), in supplying power to the motor (40).

The air discharge port (60) discharges air to the outside that has been drawn in, and this air discharge port (60) is detachably installed into the bottom of the handle (11), such that sanitation and cleaning of the air filter (70) is convenient.

In the present utility model configured as above, when the brush (21) touches and rubs against the recessed areas and narrow gaps, such as those in grills in computers, electronic products, and vehicles, in the state that the handle (11) is held, and when the switch (41) is turned on, the dust stuck in the recesses is drawn in by the suction fan (30) through the suction pipe (20) to the dust collection space (12); the dust that is drawn in accumulates in the dust collection space (12) by getting caught in the air filter (70), and the air that has been drawn in, excluding the dust, is discharged to the air discharge port (60) by going through the air filter (70).

Therefore, the present utility model is beneficial in being able to clean dust stuck in recessed places and narrow gaps thoroughly and easily, such as those in grills in computers, electronic products, and vehicles.

Effect of the utility model

As described above, the present utility model has an effect of being able to clean dust stuck in recessed places and narrow gaps easily, such as those in grills in computers, electronic products, and vehicles, using a pistol style compact vacuum cleaner.

(57) Scope of claims

Claim 1

A pistol style compact vacuum cleaner comprises: a main body (10) having a dust collection space (12) furnished on the top of the handle (11); a suction pipe (20) being detachably connected to the dust collection space (12), having a brush (21) installed on the inlet thereof; a suction fan (30) drawing in dust, being installed on the dust collection space (12); a motor (40) driving the suction fan (30); a battery (50) supplying power to the motor (40) being detachably installed into the handle (11); an air discharge port (60) detachably installed on the bottom of the handle (11); and an air filter (70) equipped between the dust collection space (12) and the air discharge port (60).

Figures

FIG. 1

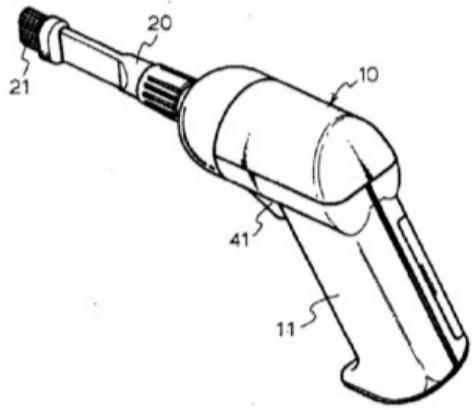

FIG. 2

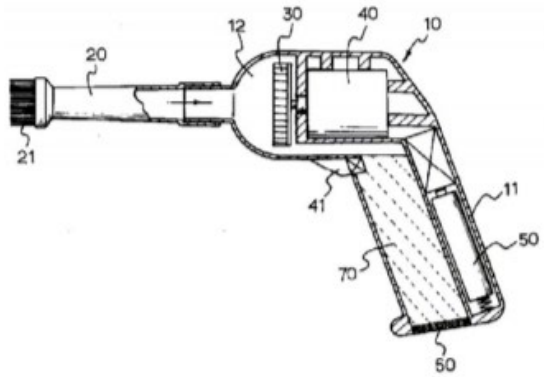

MORNINGSIDE

TRANSLATION CERTIFICATION

Date: November 30, 2023

To whom it may concern:

This is to certify that the attached translation is an accurate representation of the documents received by this office. The translation was completed from:

- Korean

To:

- English

The documents are designated as:

- KR19980020751U

Prince Williams, Project Manager in this company, attests to the following:

"To the best of my knowledge, the aforementioned documents are a true, full and accurate translation of the specified documents."

Signature of Prince Williams