May 16, 1933. A. O. ENGBERG ET AL 1,908,834

HANDLE

Original Filed Dec. 29, 1927

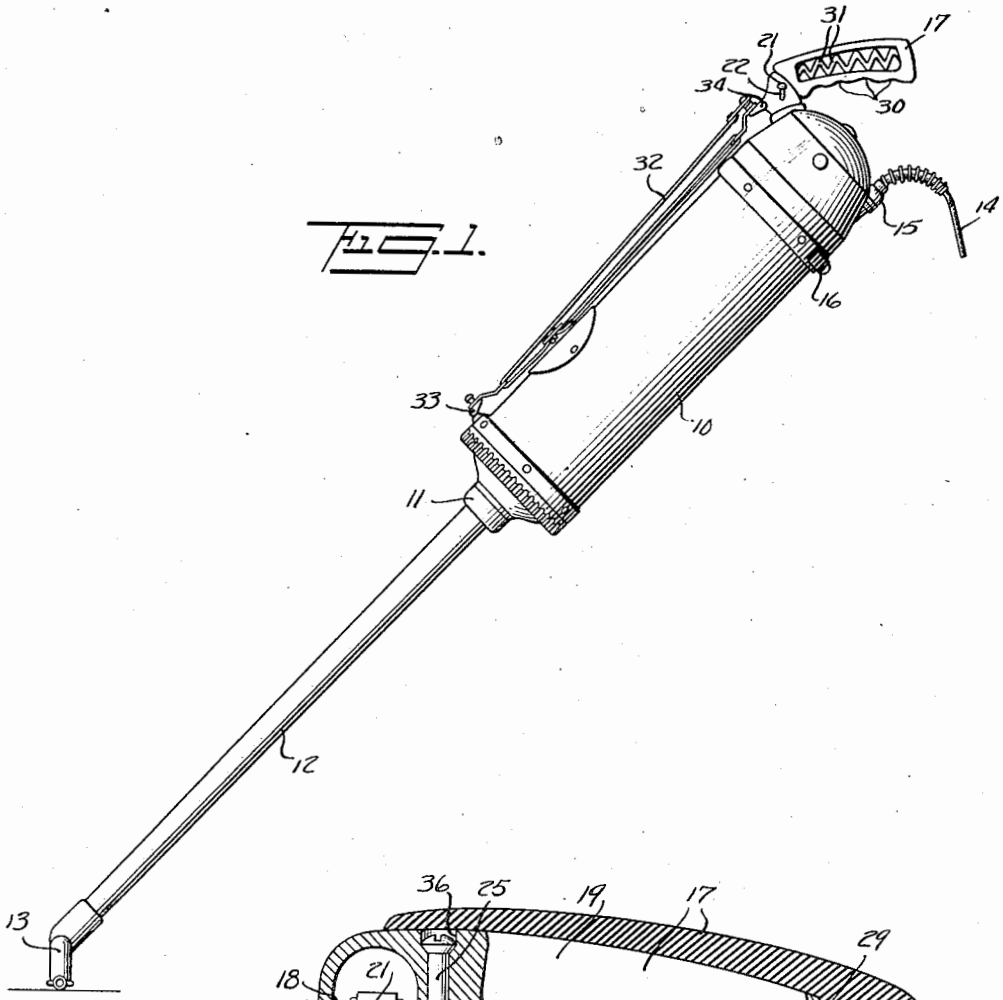

FIG. 1.

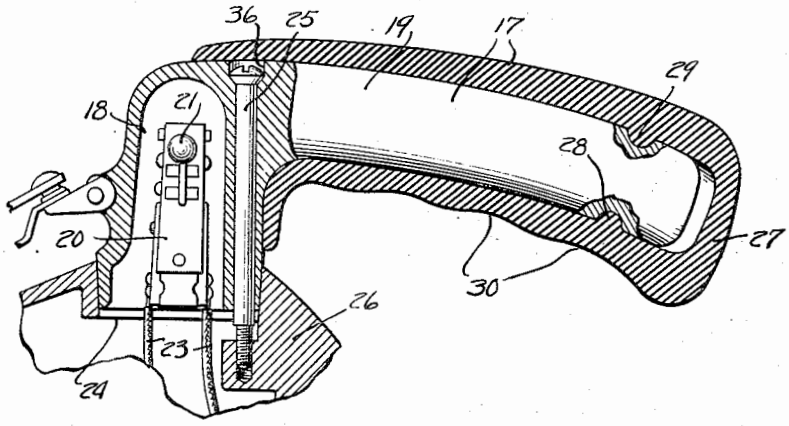

FIG. 2.

INVENTORS
Axel Olof Engberg
Ford Erik Daniel Bilde
BY
Wm. T. Hedlund
their ATTORNEY

Patented May 16, 1933 1,908,834

UNITED STATES PATENT OFFICE

AXEL OLOF ENGBERG AND TORD ERIK DANIEL BILDE, OF STOCKHOLM, SWEDEN, ASSIGNORS, BY MESNE ASSIGNMENTS, TO ELECTROLUX CORPORATION, A CORPORATION OF DELAWARE

HANDLE

Original application filed December 29, 1927, Serial No. 243,423, now Patent No. 1,868,659, dated July 26, 1932, and in Germany January 6, 1927. Divided and this application filed March 28, 1930, Serial No. 439,600.

This application is a division of our copending application Serial No. 243,423 filed December 29th, 1927, now Patent No. 1,868,659, issued July 26, 1932.

Our invention relates to improvements in handles and particularly to handles for use in connection with a vacuum cleaner or floor polisher.

One of the objects of our invention is the provision of an electrically insulated handle into which is incorporated an electric switch for controlling the operation of the motor used to drive the cleaner or polisher mechanism.

Another object of our invention is to provide improved and simplified means for securing the handle to the remainder of the cleaner or polisher.

Further objects and advantages will appear from the following description taken in connection with the accompanying drawing, which forms a part of this specification and on which:

Fig. 1 is a side elevational view of a preferred embodiment of our invention in connection with a vacuum cleaner; and

Fig. 2 is a cross-sectional view of a portion of the apparatus shown in Fig. 1.

Referring more particularly to Fig. 1, reference character 10 designates the cylindrical casing of a vacuum cleaner within which is mounted a dust bag and fan operated by an electric motor. The construction of the cleaner is fully described in our copending application Serial No. 243,423 and need not be repeated here.

Reference character 11 designates the suction inlet of the cleaner to which is removably secured a tubular member 12 provided with a suction nozzle 13. The usual flexible electric cable 14 is removably attached by means of a plug 15 and supplies electric current for the operation of the motor. A pair of short feet 16, one on either side near the rear of the cleaner body, are provided so that when the body is placed on the floor it will not roll around, but remain in an upright position. A handle 17 is secured to the rear upper part of cleaner body 10 and serves as a hand-grip whereby the cleaner may be manipulated.

Handle 17 has the general form of a pistol grip. It comprises a main body member preferably cast in the form shown and of any suitable metal, which body member comprises a hollow portion 18 and a hand-grip portion 19. The hollow portion 18 constitutes a housing in which is mounted an electric switch 20 having a handle 21 which extends through a slot 22 in the side of the housing. Switch 20 is connected by suitable conductors 23 in the circuit of the electric motor used to drive the cleaner fan.

The exterior lower portion of housing 18 is conically formed and fits into a corresponding conical bore or recess 24 formed in casing 10. The wall on one side of housing 18 is drilled parallel to the axis of the cone to receive a screw 25, the lower end of which screws into a lug 26 formed on casing 10. Thus, when screw 25 is tightened it draws the conical surfaces of housing 18 and bore 24 together, whereby handle 17 is securely held to the casing of the cleaner. The hand-grip portion 19 of the handle is slightly arc-shaped and may be said to extend outwardly from housing 18 and substantially at right angles thereto.

A one-piece cast or molded insulating cover 27 is placed over portion 19 of handle 17. Cover 27 is preferably made of soft rubber and is therefore flexible and frictionally engages member 19. Depressions 28 are former in member 19 which are engaged by projections 29 formed on the inner side of cover 27 and serve to aid the friction in retaining the cover in place. However, cover 27 may be slipped on and off the handle if sufficient force is exerted, due to its flexible character. The head of screw 25 sets into a recess 36 in housing 18 and cover 27 is made to extend over the recess 36 and the head of the screw so as to cover the head of the screw and present a neat appearance. The lower side of cover 27 is formed with depressions 30 to be engaged by the fingers of the operator. The sides of cover 27 may be formed with ribs 31 in order to provide further gripping surface.

For the purpose of carrying the apparatus a strap 32 is provided on the upper side of casing 10. One end of this strap is secured to the front of the casing at 33 while the other end is secured at 34 to housing 18 of handle 17.

Our invention thus results in the provision of an easily gripped handle by means of which the vacuum cleaner may be readily manipulated. The location of the switch in the handle is such that it may be conveniently operated while in a position where it will not be apt to be moved accidentally.

While we have illustrated and described a more or less specific embodiment of our invention, it is to be understood that modifications thereof fall within its scope, which is to be limited only by the appended claims considered in the light of the prior art.

What we claim is:

1. In a vacuum cleaner, a casing, a handle therefor comprising a body member, means securing said body member to said casing and a removable insulating cover fitting onto said body member and covering said securing means.

2. In a vacuum cleaner, a casing, a handle therefor comprising a body member, means securing said body member to said casing, and a removable soft rubber cover fitting onto said body member and covering said securing means.

3. In a vacuum cleaner, a casing, a handle therefor comprising a body member, means securing said body member to said casing and a removable one-piece insulating cover fitting onto said body member and covering said securing means.

4. In a vacuum cleaner, a casing, a handle therefor comprising a body member, means securing said handle to said casing and a removable one-piece soft rubber cover for said handle covering said securing means.

5. In a vacuum cleaner, a casing, a handle secured to said casing, said handle comprising a hand-grip portion and a hollow portion, an electric switch mounted in said hollow portion and a removable resilient insulating cover on said hand-grip portion.

6. In a vacuum cleaner, a casing, a handle secured to said casing, said handle comprising a hand-grip portion and a hollow portion, an electric switch mounted in said hollow portion and having a handle extending through the wall of said hollow portion and a removable resilient insulating cover on said hand-grip portion.

7. In a vacuum cleaner, a casing having a conical recess therein, a handle having a hand-grip portion and a portion having an outside conical surface and a fastening member extending through said handle and engaging said casing for holding said conical portion in said conical recess.

8. In a vacuum cleaner, a casing having a conical recess therein, a handle having a hand-grip portion and a portion having an outside conical surface, a fastening member engaging said handle and said casing for holding said conical portion in said conical recess and a removable resilient insulating cover on said hand-grip portion and covering said fastening member.

9. In a vacuum cleaner, a casing having a conical recess therein, a handle having a hand-grip portion and a conical portion, means for securing said conical portion within said conical recess and a removable resilient insulating cover on said hand-grip portion and covering said means.

10. In a vacuum cleaner, a casing having a conical recess therein, a handle having a hand-grip portion and a hollow portion, said hollow portion having an outside conical surface for fitting into said conical recess, means to secure said conical hollow portion in said conical recess, an electric switch within said hollow portion and a removable resilient insulating cover on said hand-grip portion and covering said means.

11. In a vacuum cleaner, a casing having a conical recess therein, a handle having a hand-grip portion and a hollow portion, said hollow portion having an outside conical surface for fitting into said conical recess, a screw passing through said conical hollow portion and engaging said casing for holding said conical hollow portion in said conical recess and a removable resilient insulating cover on said hand-grip portion and covering said screw.

12. In a vacuum cleaner, a casing having a conical opening therethrough, a handle having a hand-grip portion and a hollow portion, said hollow portion having an outside conical surface for fitting into said conical recess and being closed at one end and open at the other for communicating with the interior of said casing, said hollow portion having a passageway formed therein adjacent to and substantially parallel to said surface, and a member extending through said passageway and engaging said casing for securing said handle to said casing.

13. In a vacuum cleaner, a casing having a conical opening therethrough, a handle having a hand-grip portion and a hollow portion, said hollow portion having an outside conical surface for fitting into said conical recess and being closed at one end and open at the other for communicating with the interior of said casing, said hollow portion having a passageway formed therein adjacent to and substantially parallel to the part of said surface adjacent to said hand-grip portion, a member extending through said passageway and engaging said casing for securing said handle to said casing, and a removable resilient insulating cover on

said hand-grip portion and extending over the end of said member.

14. In a vacuum cleaner, a casing having a conical opening therethrough, a handle having a hand-grip portion and a hollow portion, said hollow portion having an outside conical surface for fitting into said conical recess and being closed at one end and open at the other for communicating with the interior of said casing, said hollow portion having a passageway formed therein adjacent to and substantially parallel to the part of said surface adjacent to said hand-grip portion, a member extending through said passageway and engaging said casing for securing said handle to said casing, an electric switch located in said hollow portion, and electrical conductors connected to said switch and extending through the open end of said hollow portion and into said casing.

15. In a vacuum cleaner, a casing having a conical opening therethrough, a handle having a hand-grip portion and a hollow portion, said hollow portion having an outside conical surface for fitting into said conical recess and being closed at one end and open at the other for communicating with the interior of said casing, haid hollow portion having a passageway formed therein adjacent to and substantially parallel to the part of said surface adjacent to said hand-grip portion, a member extending through said passageway and engaging said casing for securing said handle to said casing, an electric switch located in said hollow portion, electrical conductors connected to said switch and extending through the open end of said hollow portion and into said casing, and a removable resilient insulating cover on said hand-grip portion and extending over the end of said member.

In testimony whereof, we have affixed our signatures.

AXEL OLOF ENGBERG.
TORD ERIK DANIEL BILDE.