Nov. 16, 1937. J. J. McCABE ET AL 2,099,172

SUCTION SWEEPER

Filed June 30, 1933 5 Sheets-Sheet 1

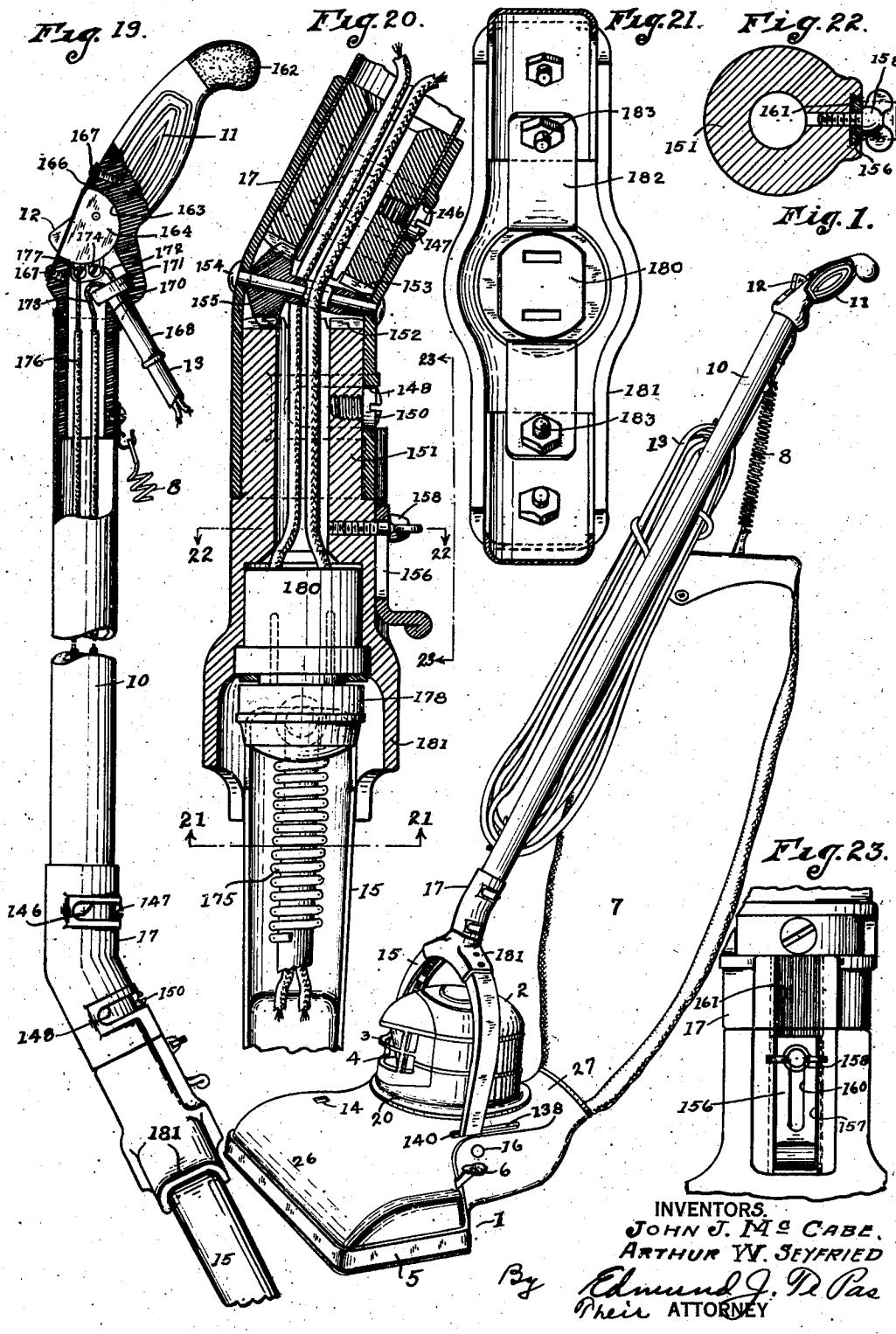

Nov. 16, 1937. J. J. McCABE ET AL 2,099,172

SUCTION SWEEPER

Filed June 30, 1933 5 Sheets-Sheet 2

Fig. 2.

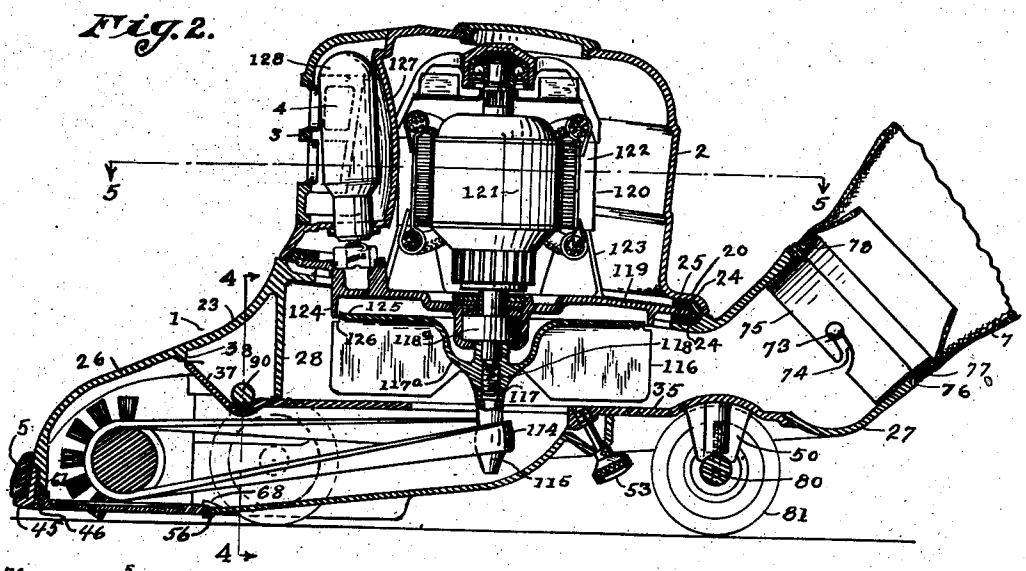

Fig. 3.

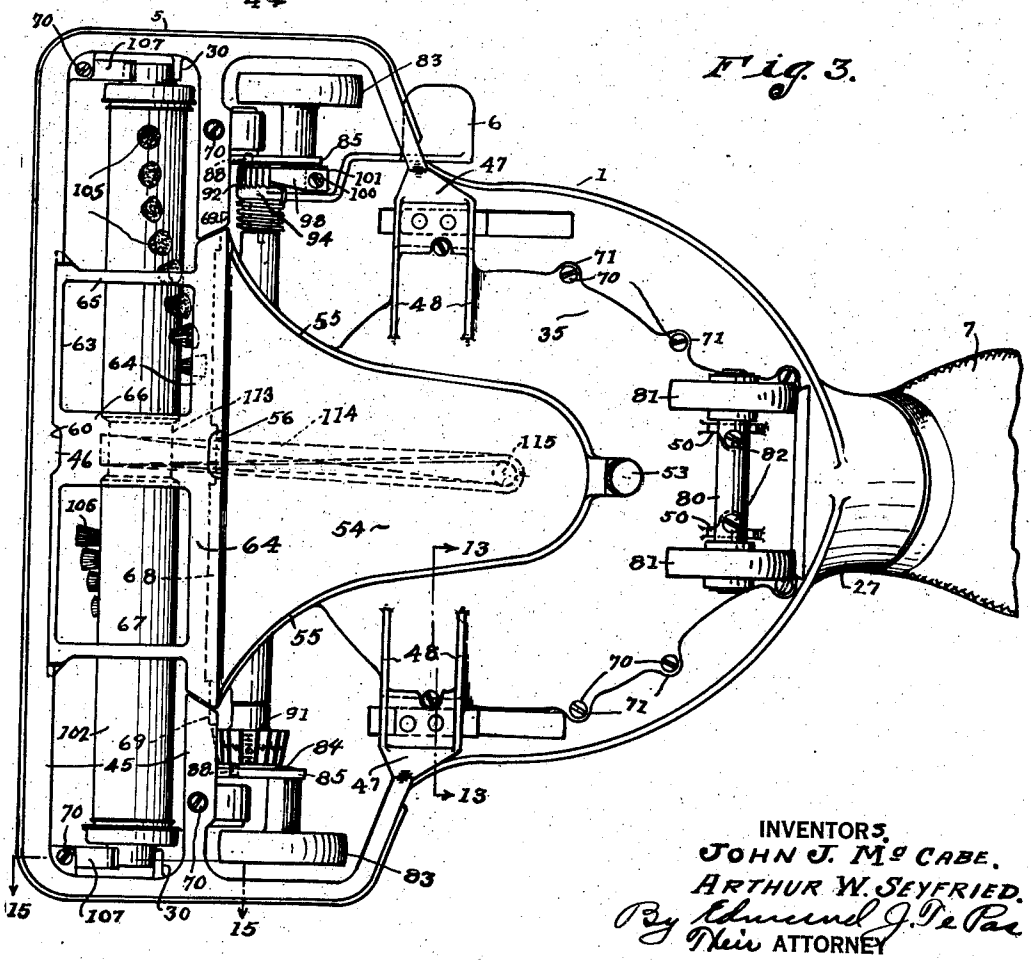

INVENTORS.
JOHN J. McCABE.
ARTHUR W. SEYFRIED.
By Edmund J. De Pas
Their ATTORNEY

Nov. 16, 1937. J. J. McCABE ET AL 2,099,172

SUCTION SWEEPER

Filed June 30, 1933 5 Sheets-Sheet 3

Fig. 4.

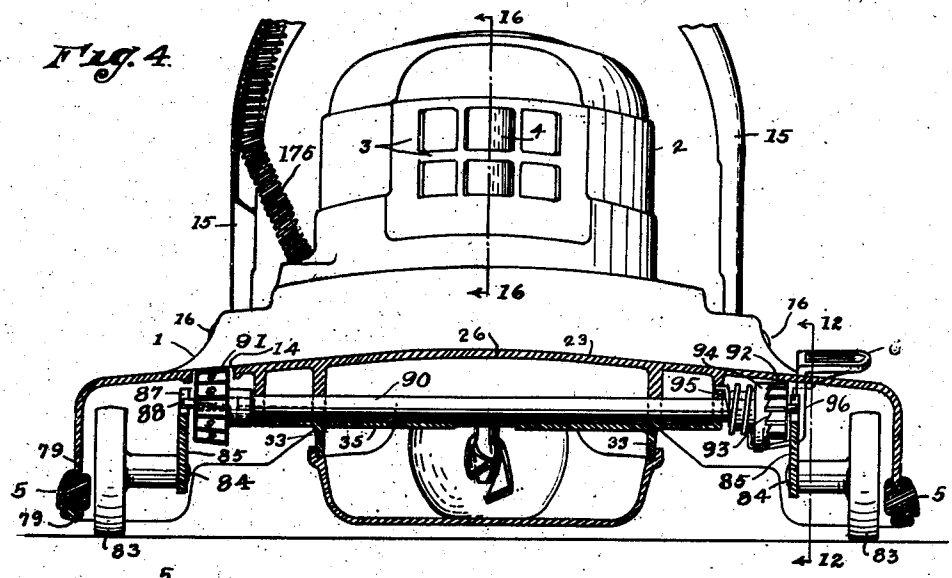

Fig. 5.

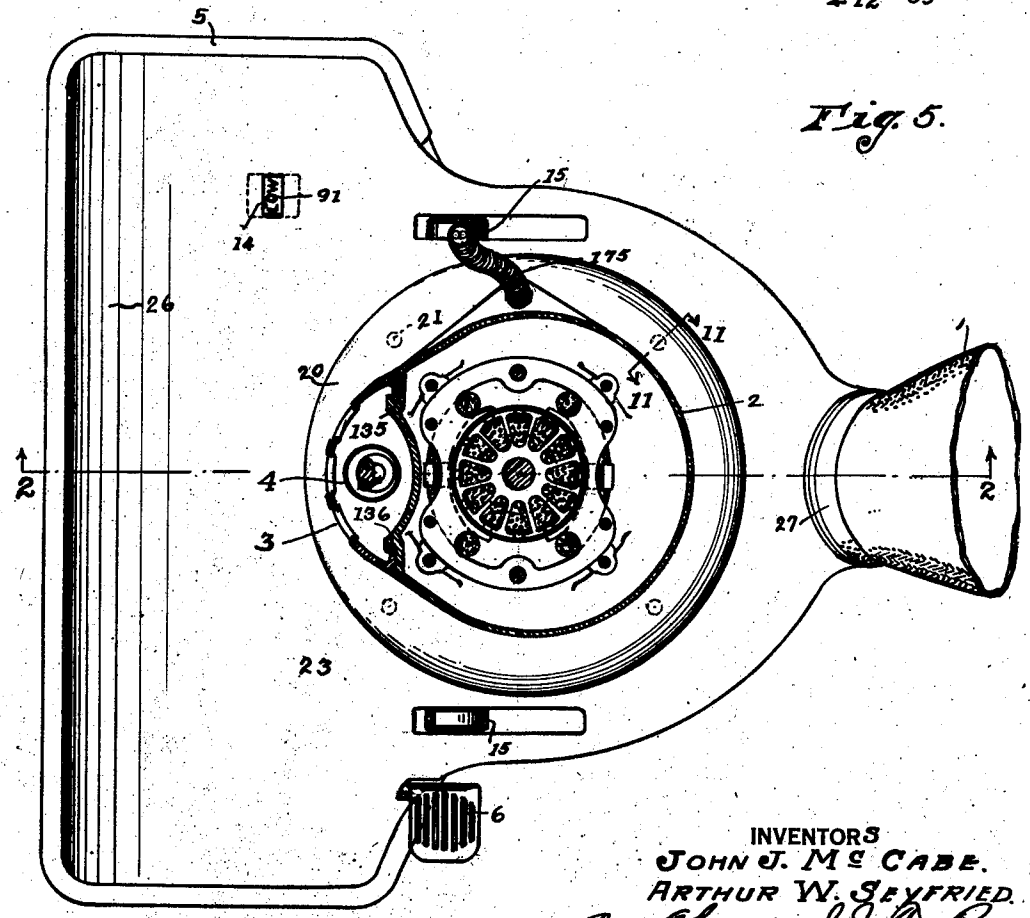

INVENTORS
JOHN J. McCABE.
ARTHUR W. SEYFRIED.
By Edmund J. De Pas
Their ATTORNEY

Fig. 6.

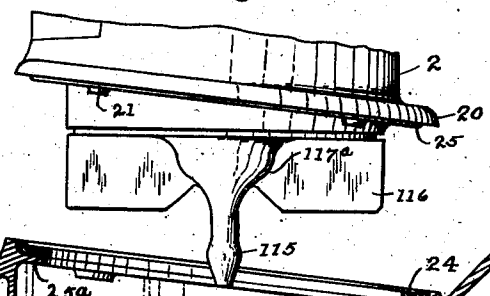

Fig. 7.

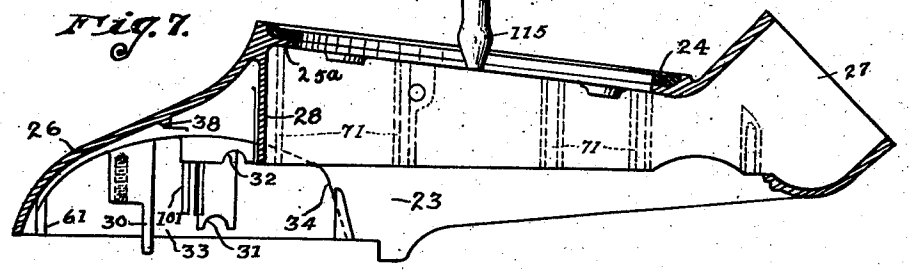

Fig. 8.

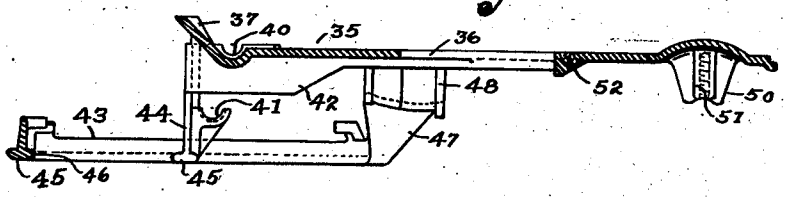

Fig. 9.

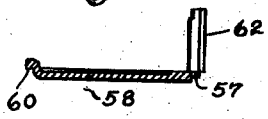

Fig. 10.

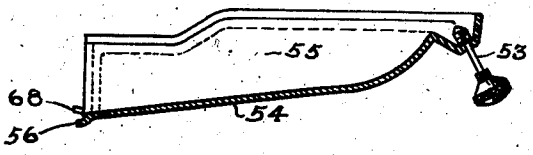

Fig. 11.

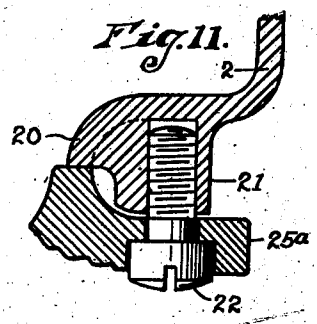

INVENTORS
JOHN J. McCABE.
ARTHUR W. SEYFRIED.
By Edmund J. De Pas
Their ATTORNEY

Nov. 16, 1937. J. J. McCABE ET AL 2,099,172

SUCTION SWEEPER

Filed June 30, 1933 5 Sheets-Sheet 5

Fig. 12.

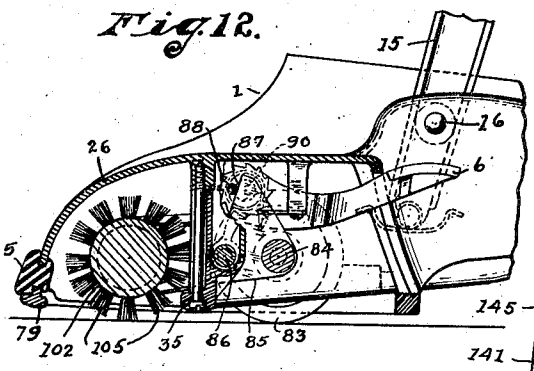

Fig. 13

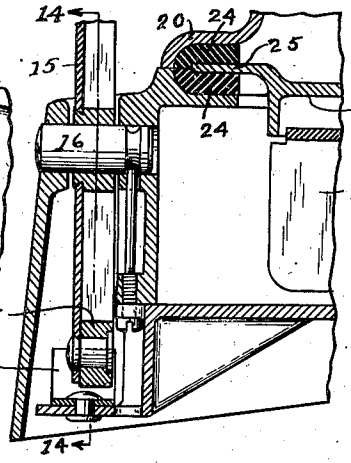

Fig. 14.

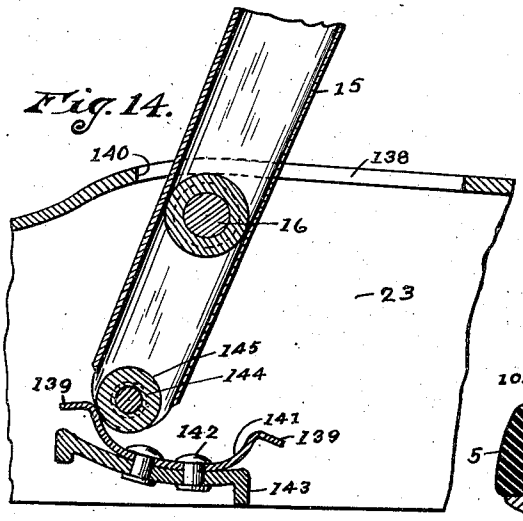

Fig. 15.

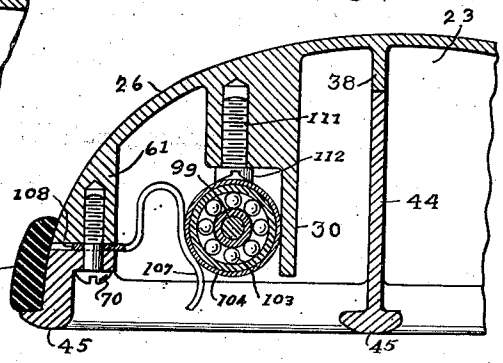

Fig. 16.

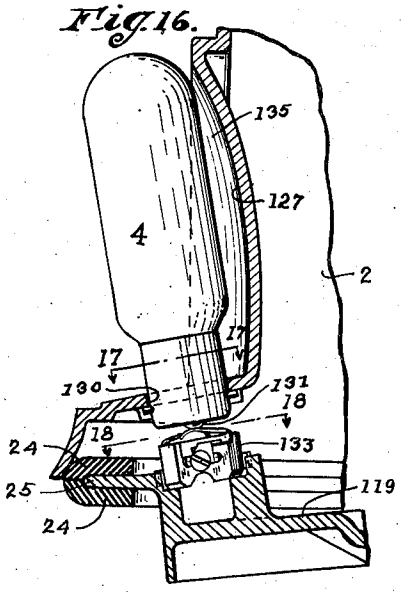

Fig. 17.

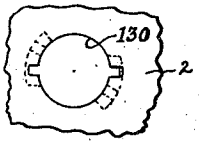

Fig. 18.

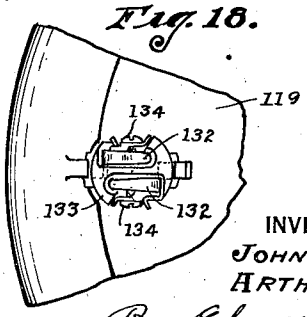

INVENTORS.
JOHN J. McCABE
ARTHUR W. SEYFRIED
By Edmund J. De Pas
Their ATTORNEY

Patented Nov. 16, 1937 2,099,172

UNITED STATES PATENT OFFICE

2,099,172

SUCTION SWEEPER

John J. McCabe and Arthur W. Seyfried, Cleveland, Ohio, assignors to The Apex Electrical Manufacturing Company, Cleveland, Ohio, a corporation of Ohio

Application June 30, 1933, Serial No. 678,454

18 Claims. (Cl. 15—8)

This invention relates to vacuum cleaners and in particular electric suction sweepers of the type employing a motor driven brush.

One of the objects of this invention is the provision of an improved form of sectional cleaner casing, the individual parts of which may be readily formed from die-castings or stampings.

Another object of this invention relates to the provision of an improved arrangement for the mounting and supporting of electric motors whereby the supporting structure is insulated with respect to the motor from the transmission of both sound vibrations and electric currents.

Another object of this invention is the provision of an improved form of sectional casing construction which provides a generally simplified means for the securement of a vacuum cleaner motor.

Another object of this invention relates to the provision of an improved means for adjusting the height of a vacuum cleaner nozzle with respect to the working surface.

Another object of this invention relates to the provision of an improved form of a quickly detachable belt cover and a quickly detachable brush guard for vacuum cleaners employing a rotatably driven brush.

Another object of this invention relates to the provision of a vacuum cleaner having a work illuminating lamp of improved construction.

Another object of this invention relates to the provision of an improved working handle support and position control for vacuum cleaners and the like.

Another object of this invention relates to the provision of an improved form of adjustable mounting for the rotary brush of a suction sweeper and an improved form of brush driving pulley.

Another object of this invention relates to the provision of an improved handle means for guiding the movement of the cleaner whereby the cleaner may be directed with a minimum of effort into the corners and around objects on the surface being cleaned.

Another object of this invention relates to the provision of an improved form of casing construction embodying as a built-in part of the casing an improved form of bumper to prevent the marring of articles of furniture and the like.

A further object of this invention relates to the provision of a cleaner casing of enhanced beauty in which all the movable and operating parts of the cleaner are concealed beneath a smoothly finished exterior shell and in which the casing is built up from a number of readily formed inexpensive sections which can be readily assembled with a small amount of labor.

With these and other objects in view, the invention consists in the novel construction, arrangement and combination of parts, hereinafter illustrated and described in some of its embodiments in the accompanying drawings, and particularly pointed out in the appended claims.

In the drawings, Figure 1 is a perspective view of a power driven suction sweeper illustrative of one form of this invention.

Figure 2 is a side elevational view in section taken on line 2—2, Figure 5.

Figure 3 is a plan view of the underside of the cleaner shown in Figures 1 and 2.

Figure 4 is a sectional view taken on line 4—4, Figure 2.

Figure 5 is a sectional view taken on line 5—5 Figure 2.

Figure 6 is a side elevational view illustrating some of the details of the motor housing and its securement means.

Figures 7, 8, 9, and 10 are detail sectional views of the individual elements of the cleaner casing shown in disassembled relation and taken on a section corresponding generally to section line 2—2, Figure 5.

Figure 11 is an enlarged sectional view taken on line 11—11, Figure 5 showing one of the details of the motor and motor cap securement means.

Figure 12 is a sectional view taken on line 12—12, Figure 4 illustrating some of the details of the supporting wheel adjustment means.

Figures 13 and 14 are enlarged sectional views taken on line 13—13, Figure 3 and 14—14 Figure 13 respectively, illustrating the details of the handle bail stop and the handle bail securement means.

Figure 15 is an enlarged sectional view taken on line 15—15, Figure 3 illustrating the details of the brush bearing and its mounting.

Figure 16 is an enlarged sectional view taken on line 16—16, Figure 4, illustrating the details of the work illuminating lamp and its receiving socket with the lamp guard removed from the cleaner casing.

Figure 17 is a sectional view of the lamp details taken on the line 17—17, Figure 16.

Figure 18 is a sectional view of the lamp details taken on the line 18—18, Figure 16.

Figure 19 is an enlarged side elevational view partly in section showing the details of the handle construction.

Figure 20 is an enlarged sectional view taken through the axis of the lower part of the cleaner

handle, illustrating the mechanism provided for steering the cleaner.

Figure 21 is a sectional view taken on line 21—21, Figure 20 with the plug cap of the motor cord removed.

Figure 22 is a sectional view taken on line 22—22, Figure 20; and

Figure 23 is a side elevational view of the handle lock taken in a direction indicated by the line 23—23, Figure 20.

The cleaner used for the purpose of illustrating this invention comprises a casing referred to generally by the numeral 1 and having a motor cap or housing 2 at the front of which there is provided a removable guard 3 for a work illuminating lamp 4. A bumper 5 formed from a soft yielding material as for example a soft rubber, is carried by the front walls and by the side walls for the purpose of preventing contact with the cleaner during its operation from marring and scratching articles of furniture and the like.

A foot pedal having a pad 6 is provided for adjusting the height of the nozzle with respect to the working surface. The discharge end of the casing is connected in communicating relation with a dust filtering bag 7 which is secured at its upper end by means of a spring 8 to the operating handle 10 of the cleaner. The upper end of the cleaner handle is provided with a pistol grip 11 on the top part of which there is provided a switch having an operating member 12 for controlling the operation of the cleaner motor. An extension cord 13 is provided for connecting the motor to a source of electrical current supply.

A window or aperture 14 is provided in the top of the cleaner casing so that the operator can observe the nozzle adjustment indicator which shows the height at which the nozzle is adjusted with respect to the working surface. The operating handle 10 is connected to the cleaner casing by means of a bail 15 which is pivoted at 16 to the casing. This handle is connected to the bail through an angle fitting 17 and is rotatable in this angle fitting for the purpose of facilitating the steering of the cleaner casing as will be described in detail presently.

As best illustrated in Figures 6 to 11, the cleaner casing 1 is built up from a plurality of stamped or die-cast sections. The motor cap 2 terminates at its lower end in an annular flange 20 at the underside of which there is provided a plurality of circumferentially spaced, drilled and tapped bosses 21 for the reception of screws 22 by means of which the motor cap and an electric motor are secured to a casing shell 23. A pair of complementary soft rubber, annular washers 24 are interposed between the peripheral edge 25 of a motor supporting plate and the respective flanges 20 and 25a of the motor cap 2 and the casing shell 23. By reason of this arrangement the motor cap and motor are secured to the cleaner casing shell 23 upon the application of the four screws 22.

The motor is flexibly supported in a plane intermediate its length by the soft washers 24 so that it has a certain amount of freedom for oscillating and vibrating movements. The flexible rubber gaskets or washers 24 prevent the grounding of the motor to the cleaner casing and at the same time prevent the transmission of audio-frequency vibrations to the cleaner casing. This form of motor mounting constitutes in effect a floating support for such motor whereby an extreme quietness of operation of the device is attained.

The motor cap 2 and shell 23 shown in Figures 6 and 7, form the major portion of the exterior finished part of the cleaner casing. The forward end 26 of the shell 23 forms in part, the nozzle and suction chamber forming walls of the casing. A discharge outlet 27 is formed by the rear part of the shell. A vertical wall part 28 extends from the inner face of the shell to form the side walls of a fan case. A pair of wall members 30, located one at each side the forward end of the shell form a portion of a brush bearing support which will be described in detail presently.

A pair of bearing halves 31 and 32 are formed integrally with the shell 23 at each side thereof. At each side of the front half of the shell are formed side walls 33 and rear walls 34. The wall parts 33 and 34 cooperate to define in part, wheel chambers for concealing the forward supporting wheels of the cleaner. The aforesaid parts described in connection with the shell 23, are preferably formed integrally with the shell as may be readily done by forming the shell from a die-casting.

A partition member indicated generally by the numeral 35 and shown in Figure 8, cooperates with the shell 23 to complete the fan chamber and to form in part, the walls of a suction chamber which constitutes a connecting chamber or passageway between the inlet opening 36 of the fan case and the working mouth of the cleaner. At the forward end of the partition member there is provided an upstanding lip 37 which abuts against a short wall part 38, integrally formed with the underside of the shell 23.

A pair of bearing halves 40 and 41 are formed at each side of the forward end of the partition member and when the cleaner is assembled they are positioned opposite to the bearing halves 32 and 31 respectively. A pair of vertical walls 42 depend from the underside of the partition member at its opposite edges. These walls are located in front of the fan case opening 36 and they form in part the side walls of the suction chamber.

The forward end of the partition member 35 is provided with wall portions 43 and 44 having a flanged lower edge or bead 45 to form the front, side and part of the rear lips of the suction mouth of the cleaner. Part of the rear edge of the forward lip of the nozzle is cut away and at the center thereof there is left a tongue 46 the purpose of which will be described presently. The vertical wall parts 44 extend inwardly but a slight distance from the sides of the cleaner and they terminate in the side walls 42.

The nozzle forming parts 43 to 45 of the member 35 are connected to the body of this member by means of the wall parts 44 and the interconnecting members 47 and 48 which are provided at the opposite edges of the partition member. Rearwardly of the member 35 there is provided a pair of depending bosses 50 having threaded holes 51 for receiving the screws which hold the rear supporting wheels of the cleaner in place. A threaded hole 52 is provided at a point adjacent to the rear of the fan inlet 36 for the reception of a threaded member 53 which is provided to adjustably hold the removable cover plate 54 shown in Figure 10, in position below the inlet 36 of the fan case.

The cover plate 54 is provided with side walls 55, the upper edges of which contact with the underside of the member 35 and the lower edges of the walls 42. At the forward edge of the plate 54 there is formed a tongue 56 which extends over a notched portion 57 of a combined brush

and belt guard 58, which is shown in Figure 9.

The forward edge of the guard 58 fits in the cut-out portion of the front nozzle lip and it is provided with a notch at 60 which hooks over the tongue 46. The top of the forward edge of the member 58 contacts against the lower edges of the bosses 61 of the nozzle forming portion 26 of the shell 23. To the rear of the member 58 there is provided a pair of supporting wall members 62 one at each end of the guard, which contact against the underside of the shell 23.

The combined belt and brush guard 58 is in the form of a rectangular grid having parallel edges 63 and 64, the former of which forms part of the rear edge of the front lip of the suction mouth while the latter forms the central part of the rear lip of the suction mouth of the cleaner. The portions 63 and 64 of the guard member are connected with each other by means of cross members 65, 66, and 67. These cross members serve to prevent carpets or rugs from being drawn into the suction mouth to a greater extent than is desirable and the relatively wide center cross member 66 has the added function of serving as a guard for a brush driving belt.

The front edge 68 of the cover plate 54 fits beneath the rear edge of the part 64 of the member 58. The surface of the bead 44 of the partition member 35 and the faces of the side members 63 and 64 of the belt and brush guard lie in a single plane and together they form the lips or work engaging edges of the suction mouth of the cleaner. The front ends 69 of the wall parts 55 of the cover plate 54 fit beneath the ends of the bead 45.

As previously stated the motor cap or housing 2 is secured to the shell 23 by means of four screws 22. The partition member 35 is secured to the underside of the shell 23 by means of screws 70 which are received in drilled and tapped bosses 71 formed integrally with the shell 23. The removable belt and brush guard 58 is securely held in place by the tongues 46 and 56 upon the application of the cover plate 54. The cover plate 54 is detachably secured at its rear end to the member 35 by means of the thumb screw 53 and at its forward end by the outer edge parts 69 which are received beneath the ends of the lip parts 45.

The bumper 5 is preferably made of a rather thick and soft yielding material as for example rubber of the consistency ordinarily used in automobile tires. The bumper is in the form of a strip having channels 79 along its upper and lower edges which are provided for receiving the lower edges of the opposite sides of the nozzle forming part of the shell 23 and the corresponding upper edges of the walls 43 of the member 35. The bumper is thus held in place upon the assembling of the aforesaid casing parts.

The discharge outlet 27 of the shell 23 is provided with a pair of pins 73 which cooperate with the slots 74 of a bag coupling member 75 to provide an easily detachable connection for the bag coupling. A suitable packing ring 76 is provided to seal the bag coupling at the edge of the discharge outlet 27. The bag 7 is bound at 77 to an annularly grooved part 78 of the coupling 75. An axle 80, to which the rear supporting wheels 81 are journaled, is secured by means of screws 82 to the bosses 50 which are carried by the casing member 35.

The forward supporting wheels 83 are journaled on bearing pins 84 carried by plates 85 which are secured to the cleaner casing in a pivoted manner by means of pins 86. The forward upper edges 87 of each of the plates 85 form surfaces which are contacted by pins 88 formed eccentrically on a shaft 90, which extends across the width of the cleaner and which is journaled at its outer ends in cooperating pairs of bearing halves 32 and 40 provided by the shell 23 and the casing member 35. The wall parts 28, 37 and 38 cooperate with a part of the shell 23 to form a housing for the shaft 90 where it traverses the suction chamber.

The shaft 90 is provided at one end with an indicating wheel 91 which is visible through the opening 14 provided in the top face of the shell 23. At the opposite end of the shaft 90 there is a wheel having ratchet teeth 92 cut on its outer periphery and a second set of ratchet teeth 93 which are cut on its inner side face. The ratchet teeth 93 engage with the complementary teeth formed on a member 94 which is journaled for rotation on the shaft 90. Movement of the member 94 in one direction is opposed by means of a coil spring 95.

An operating lever 96 which carries the foot pad 6 is fixedly secured to the member 94 and is provided for the actuation of this member in a downward direction, the spring 95 serving to return the pedal to its upper position. A flat spring 98 is secured to the shell 23 by means of a screw 100 received in a threaded boss 101 of the shell. This spring engages at its outer end with the teeth 92 of the ratchet wheel at the underside thereof for the purpose of holding the ratchet wheel and shaft 90 in their various adjusted positions.

The length of the stroke of the operating member may for convenience be arranged so as to move the wheel adjustment either a half or a whole division of the indicating dial 91 for each downward stroke of this member. The downward movement of the pad 6 serves both to raise and lower the suction nozzle of the cleaner casing depending upon the position of the elements of this part of the cleaner.

At the forward end of the suction nozzle the end pins 99 of the brush 102 are rotatably mounted in suitable bearings such as the bearing indicated at 103 in Figure 15. These bearings are carried in and surrounded by cap-like members 104 which extend over the brush bearings and also over the outer ends of the cleaner brush 102. The brush is provided with discontinuous single rows of bristles 105 and 106 one for each half of the length of the brush and they serve to alternately beat the carpet at the opposite halves of the nozzle once for each revolution of the brush.

The brush holding bearing cups 104 are retained in position by means of a spring clip 107. The end part 108 of this spring is gripped between the contacting edges of the casing parts 23 and 35 and securely held in place by a screw 70 which is screwed into the boss 61. The spring 107 clamps the cap 104 between the wall part 30 which is formed integrally with the shell 23. This part of the shell is drilled and tapped at 111 for reception of a screw 112. The head of this screw has a curved face which contacts with the cup 104 so that when the cap is held thereagainst, the screw will be prevented from turning. This screw may be adjusted to extend at different distances from the position shown in Figure 15 in order to lower the brush in compensating for wear of the bristles.

Intermediate the ends of the brush there is provided a pulley 113 for receiving a flat rubber

belt 114 which engages in driving relation with a pulley 115 carried by the cleaner fan 116. The fan and pulley are formed from aluminum. By using aluminum for this belt pulley the life of the belt is greatly lengthened. The lower half of the driving pulley is of decreased diameter so that both edges of the belt are stretched equally. This also materially increases the useful life of the belt. The fan is drilled and threaded at its center 117 for reception of the threaded end of the motor shaft 118 of the cleaner motor 120, the armature of which is indicated by the numeral 121.

The stator 122 of this motor is rigidly secured to supporting members 123 which are in turn rigid with the motor supporting plate 119, the outer periphery 25 of which is gripped between the rubber gaskets 24. The plate 119 and the supporting members 123 may be conveniently formed from a single die casting. The underside of this casting is fitted with a vertical annular wall 124, which forms a recess for receiving the base or disk 125 of the fan. The fan blades are notched at 126 and extend beyond the edge of the disk 125 and over the wall part 124 so that during the operation of the cleaner they serve to prevent lint and litter from accumulating beneath the fan in the space between the fan disk 125 and the plate 119. A cup 117[a] is formed centrally of the fan disk for the accommodation of the motor bearing 118[a]. This arrangement permits the locating of the motor bearing closer to the belt pulley 115 thus decreasing the load on this bearing and increasing its life.

The front portion of the motor housing 2 has a concave surface 127 which provides a reflecting surface for the work illuminating electric lamp 4. The base of this lamp is detachably fitted into a socket 130 formed in the motor cap. Contact terminal members 131 are provided at the lower end of the lamp for contact engagement with terminals 132 carried by a plug member 133. Screws 134 are provided for connecting the terminals of the plug member 133 to the conductor strands of an electric cord which are connected in the motor circuit. If desired these strands may be connected to an independent source of current supply.

In the present case the lamp is connected so that it operates at all times during the operation of the cleaner motor, such connection being found to be one which can be readily made and it was also discovered that there is less tendency for the filaments of the lamp to break when the lamp is operated at all times during the operation of the cleaner motor.

The forward part of the casing is provided with a pair of oppositely located parallel vertical grooves 135 in which are received the tongues 136 of the lamp guard 3. This guard may be readily removed from the cleaner for permitting access to the lamp for cleaning or other purposes.

The shell part 23 of the cleaner casing is provided with slots 138 into which the ends of the handle bail 15 extend. The forward edge 140 of these slots provides a stop for the upright position of the cleaner handle. Within the casing and to each side of the same as illustrated in Figures 13 and 14, there is provided a U-shaped spring 141 having turned-down ends 139. The center of this spring is riveted at 142 to a part 143 carried by the shell 23. A pair of pins 144 are carried in the extended ends of the bail 15. On these pins are journaled rollers 145 which contact with the springs 141.

The springs 141 have sufficient tension to insure the raising of the forward end of the cleaner when the handle is depressed for lifting the forward or nozzle end of the cleaner over small obstructions and when it is desired to clean under articles of furniture and the like which require the handle to be further depressed, the tension of the spring being readily overcome by further downward pressure on the handle, whereupon the handle can be adjusted to a substantially horizontal position and readily returned to its normal operating position after such cleaning operations have been completed. The bent-over parts 139 of the spring tend to maintain the handle in its vertical and horizontal positions by reason of the fact that the rollers 145 engage these portions of the spring for such positions of the handle.

A pivotal connection is provided between the handle 10 and the bail 15 for the purpose of changing the direction of the cleaner by simply twisting the cleaner handle. This is a great convenience in cleaning around articles of furniture and the like. The mechanism for accomplishing this desirable result comprises the angular tubular member 17 into which the lower end of the cleaner handle 10 is journaled. The member 17 is slotted at 146 for the reception of a screw 147 which is carried in the lower end of the handle. A second slot 148 is provided in the lower part of the tubular member 17 for receiving another screw 150 carried by a member 151 which is rigid with the bail 15. The upper edge of the member 151 is formed with gear teeth 152 and the lower end of the handle is provided with a similar set of gear teeth 153.

The tubular member 17 is traversed at its bend by a pin 154. A differential gear 155 is journaled on the pin 154 within the tube 17. This gear meshes with the gear teeth 152 and 153 so that when the cleaner handle 10 is twisted in one direction the part 151 which is rigid with the bail is rotated in an opposite direction and in this manner by a simple twist of the wrist the direction of the cleaner may be changed without swinging the cleaner handle through a large arc, thereby saving the operator considerable labor in the use of the cleaner.

A plate 156 is slidably mounted in a slot 157 formed in the handle part 151 which is rigid with the bail 15. The plate 156 can be locked in position by means of a winged screw 158 which extends through a slot 160 formed in the member 156. The tube 17 has a slot 161 for receiving at times the member 156. When this member is adjusted to its upper position the sleeve 17 and the handle 10 are locked to the bail 15 and it is then impossible to twist the cleaner handle with respect to the bail. This arrangement is provided when it is not desired to use the steering device carried in the tube 17.

The pistol grip 11 of the cleaner handle may be conveniently formed from hard rubber and as a means for preventing such handle from marring articles of furniture and the like the end part 162 of the grip is formed from a rubber of softer composition than is the rest of the grip.

At the forward end of the pistol grip a cavity 163 is formed for receiving a switch 164, the operating member 12 of which extends above the top of the grip where it may be readily manipulated by the thumb of the operator. A plate 166, secured by means of screws 167 to the grip 11, serves to hold the switch in position in the grip. The electric cord 13 has a rubber sleeve 168

molded about the end which is received within an opening 170 formed in the underside of the grip 11. A shoulder 171 is formed on the inner end of the sleeve 168 to prevent the cord from being pulled out of the handle.

This arrangement also provides a strain relief for the connections of the conductor strands 172 and 173, the former of which is connected at 174 to the switch 164. The strand 173 together with a strand 176 extend through the length of the handle to a connector plug 180 to which they are connected. The other end of the strand 176 is connected to the switch by the screw 177. The conductor strands of the cord for the lamp and electric motor are incased in the flexible sheath 175 and are connected at their outer ends to a plug cap 178 which provides a detachable connection with the complementary plug part 180, the contact terminals of which are connected to the conductor strands 173 and 176. The plug part 180 is held in the bail frame 181 by means of a pair of clips which are bolted at 183 to this part of the handle.

The specific details of the hand-grip and the control switch associated therewith do not form a part of the present invention and our following copending applications relate to certain features of the invention as indicated below which are disclosed but not specifically claimed herein.

J. J. McCabe et al. application Serial No. 15,132 filed April 6, 1935 for Operating handle for manually propelled tool and relating to details of the steering features of the handle;

J. J. McCabe et al. application Serial No. 118,512 filed December 31, 1936 for Work illuminating device for portable electrically operated cleaners and relating to details of the illuminating device and associated structure;

J. J. McCabe et al. application Serial No. 140,952 filed May 5, 1937 for Handle mounting for portable tool and relating to details of the handle mounting and its adjustable connection and securement with respect to the cleaner casing.

Furthermore it is to be understood that the particular forms of apparatus shown and described, and the particular procedure set forth are presented for purposes of explanation and that various modifications of said apparatus and procedure can be made without departure from this invention as described in the appended claims.

Having thus described our invention what we claim is:

1. A sectional casing for vacuum cleaners and the like comprising, a motor cap or housing, a shell forming in part the walls of a fan case and suction chamber, a partition member cooperating with said shell and forming a wall of the fan case and in part the walls of the suction chamber at one side of the fan case, a cover plate cooperating with the two last named casing parts to complete the walls of the suction chamber, and means for securing the aforesaid casing parts one to the other in the order named.

2. A sectional casing for vacuum cleaners and the like comprising, a motor cap or housing, a plate forming one wall of a fan case, a shell forming in part the walls of the fan case and a suction chamber, a partition member cooperating with said shell and forming in part the walls of the suction chamber and completing the fan case, a cover plate cooperating with the two last named casing parts to complete the walls of the suction chamber, means for securing the aforesaid casing parts one to the other in the order named, and a motor in said motor housing secured at one end to said first named plate, such plate having its peripheral edge portions gripped between said shell and housing, said motor being elsewhere free of engagement with said casing.

3. A brush mounting for power driven suction sweepers comprising, a casing structure defining a suction mouth, a fan case and a communicating passageway therebetween, a suction fan in the fan case, means for driving said fan, a belt pulley rigid with said fan having its axis coaxial with the fan axis, a rotatable brush in the suction mouth, bearing means at the ends of said brush, a spring clip engaging said bearing means for detachably securing said brush and bearing means in the suction mouth, a pulley on said brush, belt means connecting said pulleys, said casing structure including an element rigid therewith in contact with said brush bearing means and in position to take pull of said belt means on said brush, and a brush adjusting member carried by said casing in contact with said bearing means, said member being maintained in its adjusted position by contact with said bearing means.

4. A brush mounting for power driven suction sweepers comprising, a casing structure defining a suction mouth, a fan case and a communicating passageway therebetween, a suction fan in the fan case, means for driving said fan, a belt pulley rigid with said fan having its axis coaxial with the fan axis, a rotatable brush in the suction mouth, bearing means at the ends of said brush, a spring clip engaging said bearing means for detachably securing said brush and bearing means in the suction mouth, a pulley on said brush, belt means connecting said pulleys, and a brush adjusting screw carried by said casing structure having an end part in contact with said bearing means, such end part being so configurated that the screw is maintained in its adjusted position by reason of its contact with said bearing means.

5. A suction sweeper comprising, a casing structure defining a suction mouth, a fan case and a communicating passageway therebetween, a suction fan in the fan case, means for driving said fan, a belt pulley rotatable with said fan, a rotatable brush in the suction mouth, bearing means for said brush, a pulley on said brush, a belt connecting said pulleys, a brush guard removably positioned in the suction mouth of said casing structure, and a readily removable cover plate carried by said casing structure over said belt and having provisions for engaging and holding said brush guard in place, said brush guard being removable upon removal of said cover plate.

6. A suction cleaner comprising, a casing structure and an ambulant support therefor including a rotatably mounted shaft, said casing structure comprising wall parts defining a fan case and a suction mouth and a communicating passageway therebetween, one of the wall parts of said fan case being extended and cooperating with other wall parts of the casing to define a passageway which is closed off from and traverses the passageway between the suction mouth and fan case, said last-named passageway providing a means for housing said shaft from the dust and the dirt passing through said first-named passageway of the cleaner during its operation.

7. A suction sweeper comprising, a casing structure defining a suction mouth, a fan case

and a communicating passageway therebetween, a suction fan in the fan case, means for driving said fan, a belt pulley rotatable with said fan, a rotatable brush in the suction mouth, bearing means for said brush, a pulley on said brush, a belt connecting said pulleys, a brush guard removably positioned in the suction mouth of said casing structure, and a readily removable cover plate forming one side of the passageway of said casing structure having provisions for engaging and holding said brush guard in place, said brush guard being removable upon removal of said cover plate.

8. A suction cleaner comprising, a hollow casing, a fan case projecting into said casing, said casing defining a suction nozzle communicating with said fan and having a downwardly presented working mouth forwardly of the fan case, a wall part in said casing extending from the fan case into the suction nozzle for smoothing out the interior of the suction nozzle and for forming with said fan case and casing a passageway extending laterally of the casing, and supporting means for said cleaner including a laterally extending shaft rotatably mounted in said passageway.

9. In a suction cleaner, a casing structure having smooth and exteriorly finished wall parts defining the suction nozzle, fan case and motor housing of the cleaner, said casing structure including wall sections extending outwardly and downwardly beyond the fan case defining open recesses at the underside of the cleaner, an operating handle for the cleaner having a bail the ends of which project into said recesses through apertures formed in said wall sections, means beneath such apertures for pivotally securing the ends of said bail to said casing structure, and means concealed in the recesses at the underside of the cleaner cooperating with said bail for maintaining said handle in different adjusted positions, one of the margins of said apertures providing a stop for the operating handle.

10. A sectional casing for vacuum cleaners and the like comprising, a motor cap or housing, a plate forming one wall of a fan case, a shell forming in part the walls of the fan case and a suction chamber, a partition member cooperating with said shell and forming in part the walls of the suction chamber and completing the fan case, a cover plate cooperating with the two last named casing parts to complete the walls of the suction chamber, means for securing the aforesaid casing parts one below the other in the order named, and a vertical motor in said motor housing secured at one end to said first named plate, such plate having its peripheral edge portions gripped between said shell and housing, said motor being elsewhere free of engagement with said casing.

11. In a suction cleaner, a casing structure having smooth and exteriorly finished wall parts defining the suction nozzle, fan case and motor housing of the cleaner, said casing structure including wall sections extending outwardly and downwardly beyond the fan case defining open recesses at the underside of the cleaner, an operating handle for the cleaner having a bail the ends of which project into said recesses through apertures formed in said wall sections, means beneath such apertures for pivotally securing the ends of said bail to said casing structure, and spring means concealed in the recesses at the underside of the cleaner engaging the ends of said bail for maintaining said handle in different adjusted positions, one of the margins of said apertures providing a stop for the operating handle.

12. In a suction cleaner, an electric motor therefor having a frame with an annular flange arranged transversely of the motor axis at one end of the motor, a housing for said motor, a supporting structure for said motor comprising a casing member having an annular rim adjacent to the flange of the motor frame, said casing member defining in part at least a fan case and suction nozzle for the cleaner and forming with said motor housing the exposed portion of the cleaner when in its operative position, resilient vibration absorbing means in contact with both sides of the flange of said motor frame, and means engaging the rim of said casing member for clamping said resilient means against the flange of said motor frame and thus securing the motor to the casing member, said last-named means being concealed from view beneath the housing of said motor.

13. In a suction cleaner, an electric motor therefor, a plate rigid with a non-rotating part of said motor and arranged transversely to the axis of the motor, a supporting structure for said motor comprising a motor cap having a flanged rim and interiorly formed apertured bosses thereon and a casing member open at the side remote from the motor and having an inner rim opposite to and spaced from the rim of the motor cap and having apertures registering with the apertures of the motor cap rim, resilient means interposed between said rims and engaging the outer edge portion of said plate, and means in the apertures of said rims for securing the aforesaid structure together.

14. In a suction cleaner, an electric motor therefor, a plate rigid with a non-rotating part of said motor and arranged transversely to the axis of the motor, a supporting structure for said motor comprising a motor cap having a flanged rim and interiorly formed threaded and apertured bosses thereon and a casing member open at the side remote from the motor and having an inner rim opposite to and spaced from the rim of the motor cap and having apertures registering with the apertures of the motor cap rim, resilient means interposed between said rims and engaging the outer edge portion of said plate, and screws in the apertures of said rims for securing the aforesaid structure together, the heads of said screws abutting against the rim of said casing member and being concealed beneath said motor cap.

15. In a suction cleaner, a casing structure having smooth and exteriorly finished wall parts defining the suction nozzle, fan case and motor housing of the cleaner, the sidewalls of said nozzle extending from the front of the casing to the rearmost part thereof and defining open cavities at the underside of the casing with the walls of the suction nozzle and fan case, and fore and aft supporting wheels mounted both in such cavities and rearwardly thereof, the extended portion of the nozzle sidewalls substantially concealing such wheels from the view of the operator.

16. In a suction cleaner, a casing structure having smooth and exteriorly finished wall parts defining the suction nozzle, fan case and motor housing of the cleaner, the sidewalls of said nozzle extending from the front of the casing to the rearmost part thereof in outwardly spaced relation with respect to the sides of the fan case and defining open cavities at the underside of the

casing with the walls of the suction nozzle and fan case, and fore and aft supporting wheels mounted both in such cavities and rearwardly thereof, the extended portion of the nozzle sidewalls substantially concealing such wheels from the view of the operator.

17. In a suction cleaner, a casing structure having smooth and exteriorly finished wall parts defining the suction nozzle, fan case and motor housing of the cleaner, said casing structure including wall sections extending outwardly and downwardly beyond the fan case defining open recesses at the underside of the cleaner, an operating handle for the cleaner having a bail the ends of which project into said recesses through apertures formed in said wall sections, and means beneath such apertures for pivotally securing the ends of said bail to said casing structure, one of the margins of said apertures providing a stop for the operating handle.

18. In a suction cleaner, a casing structure having smooth and exteriorly finished wall parts defining the suction nozzle, fan case and motor housing of the cleaner, said casing structure including wall sections extending outwardly and downwardly beyond the fan case defining open recesses at the underside of the cleaner, an operating handle for the cleaner having a bail the ends of which project through apertures formed in said wall sections, and means beneath such apertures for pivotally securing the ends of said bail to said casing structure and for maintaining the handle in one or the other of a plurality of various adjusted positions, one of the margins of said apertures providing a stop for the operating handle.

JOHN J. McCABE.
ARTHUR W. SEYFRIED.