PTO/AIA/14 (11-15)
Approved for use through 04/30/2017. OMB 0651-0032
U.S. Patent and Trademark Office; U.S. DEPARTMENT OF COMMERCE
Under the Paperwork Reduction Act of 1995, no persons are required to respond to a collection of information unless it contains a valid OMB control number.

Application Data Sheet 37 CFR 1.76	Attorney Docket Number	10001-05305 US
	Application Number	
Title of Invention	Hybrid Device Having a Personal Digital Key and Receiver-Decoder Circuit and Methods of Use	

The application data sheet is part of the provisional or nonprovisional application for which it is being submitted. The following form contains the bibliographic data arranged in a format specified by the United States Patent and Trademark Office as outlined in 37 CFR 1.76.
This document may be completed electronically and submitted to the Office in electronic format using the Electronic Filing System (EFS) or the document may be printed and included in a paper filed application.

Secrecy Order 37 CFR 5.2:

☐ Portions or all of the application associated with this Application Data Sheet may fall under a Secrecy Order pursuant to 37 CFR 5.2 (Paper filers only. Applications that fall under Secrecy Order may not be filed electronically.)

Inventor Information:

Inventor 1 Remove

Legal Name

Prefix	Given Name	Middle Name	Family Name	Suffix
	David	L.	Brown	

Residence Information (Select One) ● US Residency Non US Residency Active US Military Service

City	Jupiter	State/Province	FL	Country of Residence i	US

Mailing Address of Inventor:

Address 1	c/o Proxense, LLC		
Address 2	689 NW Stonepine Drive		
City	Bend	State/Province	OR
Postal Code	97701	Country i	US

All Inventors Must Be Listed - Additional Inventor Information blocks may be generated within this form by selecting the **Add** button. Add

Correspondence Information:

Enter either Customer Number or complete the Correspondence Information section below.
For further information see 37 CFR 1.33(a).

☐ **An Address is being provided for the correspondence Information of this application.**

Customer Number	89194		
Email Address	docketing@patentlawworks.net	Add Email	Remove Email

Application Information:

Title of the Invention	Hybrid Device Having a Personal Digital Key and Receiver-Decoder Circuit and Methods of Use		
Attorney Docket Number	10001-05305 US	Small Entity Status Claimed	☒
Application Type	Nonprovisional		
Subject Matter	Utility		
Total Number of Drawing Sheets (if any)		Suggested Figure for Publication (if any)	

Under the Paperwork Reduction Act of 1995, no persons are required to respond to a collection of information unless it contains a valid OMB control number.

Application Data Sheet 37 CFR 1.76	Attorney Docket Number	10001-05305 US
	Application Number	
Title of Invention	Hybrid Device Having a Personal Digital Key and Receiver-Decoder Circuit and Methods of Use	

Filing By Reference:

Only complete this section when filing an application by reference under 35 U.S.C. 111(c) and 37 CFR 1.57(a). Do not complete this section if application papers including a specification and any drawings are being filed. Any domestic benefit or foreign priority information must be provided in the appropriate section(s) below (i.e., "Domestic Benefit/National Stage Information" and "Foreign Priority Information").

For the purposes of a filing date under 37 CFR 1.53(b), the description and any drawings of the present application are replaced by this reference to the previously filed application, subject to conditions and requirements of 37 CFR 1.57(a).

Application number of the previously filed application	Filing date (YYYY-MM-DD)	Intellectual Property Authority or Country

Publication Information:

☐ Request Early Publication (Fee required at time of Request 37 CFR 1.219)

☒ **Request Not to Publish.** I hereby request that the attached application not be published under 35 U.S.C. 122(b) and certify that the invention disclosed in the attached application **has not and will not** be the subject of an application filed in another country, or under a multilateral international agreement, that requires publication at eighteen months after filing.

Representative Information:

Representative information should be provided for all practitioners having a power of attorney in the application. Providing this information in the Application Data Sheet does not constitute a power of attorney in the application (see 37 CFR 1.32).
Either enter Customer Number or complete the Representative Name section below. If both sections are completed the customer Number will be used for the Representative Information during processing.

Please Select One:	● Customer Number	US Patent Practitioner	◯ Limited Recognition (37 CFR 11.9)
Customer Number	39194		

Domestic Benefit/National Stage Information:

This section allows for the applicant to either claim benefit under 35 U.S.C. 119(e), 120, 121, 365(c), or 386(c) or indicate National Stage entry from a PCT application. Providing benefit claim information in the Application Data Sheet constitutes the specific reference required by 35 U.S.C. 119(e) or 120, and 37 CFR 1.78.
When referring to the current application, please leave the "Application Number" field blank.

Prior Application Status	Pending		Remove
Application Number	Continuity Type	Prior Application Number	Filing or 371(c) Date (YYYY-MM-DD)
	Continuation of	14677893	2015-04-02

Under the Paperwork Reduction Act of 1995, no persons are required to respond to a collection of information unless it contains a valid OMB control number.

Application Data Sheet 37 CFR 1.76	Attorney Docket Number	10001-05305 US
	Application Number	
Title of Invention	Hybrid Device Having a Personal Digital Key and Receiver-Decoder Circuit and Methods of Use	

Prior Application Status	Patented				Remove
Application Number	Continuity Type	Prior Application Number	Filing Date (YYYY-MM-DD)	Patent Number	Issue Date (YYYY-MM-DD)
14677893	Continuation of	14171705	2014-02-03	9049188	2015-06-02
Prior Application Status	Patented				Remove
Application Number	Continuity Type	Prior Application Number	Filing Date (YYYY-MM-DD)	Patent Number	Issue Date (YYYY-MM-DD)
14171705	Continuation of	13445825	2012-04-12	8646042	2014-02-04
Prior Application Status	Patented				Remove
Application Number	Continuity Type	Prior Application Number	Filing Date (YYYY-MM-DD)	Patent Number	Issue Date (YYYY-MM-DD)
13445825	Continuation of	12329329	2008-12-05	8171528	2012-05-01
Prior Application Status	Expired				Remove
Application Number	Continuity Type	Prior Application Number	Filing or 371(c) Date (YYYY-MM-DD)		
12329329	Claims benefit of provisional	60992953	2007-12-06		

Additional Domestic Benefit/National Stage Data may be generated within this form by selecting the **Add** button. Add

Foreign Priority Information:

This section allows for the applicant to claim priority to a foreign application. Providing this information in the application data sheet constitutes the claim for priority as required by 35 U.S.C. 119(b) and 37 CFR 1.55. When priority is claimed to a foreign application that is eligible for retrieval under the priority document exchange program (PDX)[i] the information will be used by the Office to automatically attempt retrieval pursuant to 37 CFR 1.55(i)(1) and (2). Under the PDX program, applicant bears the ultimate responsibility for ensuring that a copy of the foreign application is received by the Office from the participating foreign intellectual property office, or a certified copy of the foreign priority application is filed, within the time period specified in 37 CFR 1.55(g)(1).

Remove

Application Number	Country[i]	Filing Date (YYYY-MM-DD)	Access Code[i] (if applicable)

Additional Foreign Priority Data may be generated within this form by selecting the **Add** button. Add

Statement under 37 CFR 1.55 or 1.78 for AIA (First Inventor to File) Transition Applications

Application Data Sheet 37 CFR 1.76	Attorney Docket Number	10001-05305 US
	Application Number	
Title of Invention	Hybrid Device Having a Personal Digital Key and Receiver-Decoder Circuit and Methods of Use	

☐ This application (1) claims priority to or the benefit of an application filed before March 16, 2013 and (2) also contains, or contained at any time, a claim to a claimed invention that has an effective filing date on or after March 16, 2013.
NOTE: By providing this statement under 37 CFR 1.55 or 1.78, this application, with a filing date on or after March 16, 2013, will be examined under the first inventor to file provisions of the AIA.

Application Data Sheet 37 CFR 1.76	Attorney Docket Number	10001-05305 US
	Application Number	
Title of Invention	Hybrid Device Having a Personal Digital Key and Receiver-Decoder Circuit and Methods of Use	

Authorization or Opt-Out of Authorization to Permit Access:

When this Application Data Sheet is properly signed and filed with the application, applicant has provided written authority to permit a participating foreign intellectual property (IP) office access to the instant application-as-filed (see paragraph A in subsection 1 below) and the European Patent Office (EPO) access to any search results from the instant application (see paragraph B in subsection 1 below).

Should applicant choose not to provide an authorization identified in subsection 1 below, applicant **must opt-out** of the authorization by checking the corresponding box A or B or both in subsection 2 below.

NOTE: This section of the Application Data Sheet is **ONLY** reviewed and processed with the **INITIAL** filing of an application. After the initial filing of an application, an Application Data Sheet cannot be used to provide or rescind authorization for access by a foreign IP office(s). Instead, Form PTO/SB/39 or PTO/SB/69 must be used as appropriate.

1. Authorization to Permit Access by a Foreign Intellectual Property Office(s)

A. Priority Document Exchange (PDX) - Unless box A in subsection 2 (opt-out of authorization) is checked, the undersigned hereby **grants the USPTO authority** to provide the European Patent Office (EPO), the Japan Patent Office (JPO), the Korean Intellectual Property Office (KIPO), the State Intellectual Property Office of the People's Republic of China (SIPO), the World Intellectual Property Organization (WIPO), and any other foreign intellectual property office participating with the USPTO in a bilateral or multilateral priority document exchange agreement in which a foreign application claiming priority to the instant patent application is filed, access to: (1) the instant patent application-as-filed and its related bibliographic data, (2) any foreign or domestic application to which priority or benefit is claimed by the instant application and its related bibliographic data, and (3) the date of filing of this Authorization. See 37 CFR 1.14(h)(1).

B. Search Results from U.S. Application to EPO - Unless box B in subsection 2 (opt-out of authorization) is checked, the undersigned hereby **grants the USPTO authority** to provide the EPO access to the bibliographic data and search results from the instant patent application when a European patent application claiming priority to the instant patent application is filed. See 37 CFR 1.14(h)(2).

The applicant is reminded that the EPO's Rule 141(1) EPC (European Patent Convention) requires applicants to submit a copy of search results from the instant application without delay in a European patent application that claims priority to the instant application.

2. Opt-Out of Authorizations to Permit Access by a Foreign Intellectual Property Office(s)

☐ A. Applicant **DOES NOT** authorize the USPTO to permit a participating foreign IP office access to the instant application-as-filed. If this box is checked, the USPTO will not be providing a participating foreign IP office with any documents and information identified in subsection 1A above.

☐ B. Applicant **DOES NOT** authorize the USPTO to transmit to the EPO any search results from the instant patent application. If this box is checked, the USPTO will not be providing the EPO with search results from the instant application.

NOTE: Once the application has published or is otherwise publicly available, the USPTO may provide access to the application in accordance with 37 CFR 1.14.

Under the Paperwork Reduction Act of 1995, no persons are required to respond to a collection of information unless it contains a valid OMB control number.

Application Data Sheet 37 CFR 1.76	Attorney Docket Number	10001-05305 US
	Application Number	
Title of Invention	Hybrid Device Having a Personal Digital Key and Receiver-Decoder Circuit and Methods of Use	

Applicant Information:

Providing assignment information in this section does not substitute for compliance with any requirement of part 3 of Title 37 of CFR to have an assignment recorded by the Office.

Applicant 1 Remove

If the applicant is the inventor (or the remaining joint inventor or inventors under 37 CFR 1.45), this section should not be completed. The information to be provided in this section is the name and address of the legal representative who is the applicant under 37 CFR 1.43; or the name and address of the assignee, person to whom the inventor is under an obligation to assign the invention, or person who otherwise shows sufficient proprietary interest in the matter who is the applicant under 37 CFR 1.46. If the applicant is an applicant under 37 CFR 1.46 (assignee, person to whom the inventor is obligated to assign, or person who otherwise shows sufficient proprietary interest) together with one or more joint inventors, then the joint inventor or inventors who are also the applicant should be identified in this section. Clear

● Assignee	Legal Representative under 35 U.S.C. 117	Joint Inventor
Person to whom the inventor is obligated to assign.	Person who shows sufficient proprietary interest	

If applicant is the legal representative, indicate the authority to file the patent application, the inventor is:

Name of the Deceased or Legally Incapacitated Inventor:

If the Applicant is an Organization check here. ☒

Organization Name	Proxense, LLC		
Mailing Address Information For Applicant:			
Address 1	689 NW Stonepine Drive		
Address 2			
City	Bend	**State/Province**	OR
Country	US	Postal Code	97701
Phone Number		Fax Number	
Email Address			

Additional Applicant Data may be generated within this form by selecting the Add button. Add

Assignee Information including Non-Applicant Assignee Information:

Providing assignment information in this section does not substitute for compliance with any requirement of part 3 of Title 37 of CFR to have an assignment recorded by the Office.

Under the Paperwork Reduction Act of 1995, no persons are required to respond to a collection of information unless it contains a valid OMB control number.

Application Data Sheet 37 CFR 1.76	Attorney Docket Number	10001-05305 US
	Application Number	
Title of Invention	Hybrid Device Having a Personal Digital Key and Receiver-Decoder Circuit and Methods of Use	

Assignee 1

Complete this section if assignee information, including non-applicant assignee information, is desired to be included on the patent application publication. An assignee-applicant identified in the "Applicant Information" section will appear on the patent application publication as an applicant. For an assignee-applicant, complete this section only if identification as an assignee is also desired on the patent application publication.

Remove

If the Assignee or Non-Applicant Assignee is an Organization check here. ☐

Prefix	**Given Name**	Middle Name	**Family Name**	Suffix

Mailing Address Information For Assignee including Non-Applicant Assignee:

Address 1			
Address 2			
City		**State/Province**	
Country i		Postal Code	
Phone Number		Fax Number	
Email Address			

Additional Assignee or Non-Applicant Assignee Data may be generated within this form by selecting the Add button. Add

Signature:

Remove

NOTE: This Application Data Sheet must be signed in accordance with 37 CFR 1.33(b). **However, if this Application Data Sheet is submitted with the INITIAL filing of the application and either box A or B is not checked in subsection 2 of the "Authorization or Opt-Out of Authorization to Permit Access" section, then this form must also be signed in accordance with 37 CFR 1.14(c).**

This Application Data Sheet **must** be signed by a patent practitioner if one or more of the applicants is a **juristic entity** (e.g., corporation or association). If the applicant is two or more joint inventors, this form must be signed by a patent practitioner, **all** joint inventors who are the applicant, or one or more joint inventor-applicants who have been given power of attorney (e.g., see USPTO Form PTO/AIA/81) on behalf of **all** joint inventor-applicants.

See 37 CFR 1.4(d) for the manner of making signatures and certifications.

Signature	/Matthew Holmes/			Date (YYYY-MM-DD)	2015-12-07
First Name	Matthew	Last Name	Holmes	Registration Number	65160

Additional Signature may be generated within this form by selecting the Add button. Add

Application Data Sheet 37 CFR 1.76	Attorney Docket Number	10001-05305 US
	Application Number	
Title of Invention	Hybrid Device Having a Personal Digital Key and Receiver-Decoder Circuit and Methods of Use	

This collection of information is required by 37 CFR 1.76. The information is required to obtain or retain a benefit by the public which is to file (and by the USPTO to process) an application. Confidentiality is governed by 35 U.S.C. 122 and 37 CFR 1.14. This collection is estimated to take 23 minutes to complete, including gathering, preparing, and submitting the completed application data sheet form to the USPTO. Time will vary depending upon the individual case. Any comments on the amount of time you require to complete this form and/or suggestions for reducing this burden, should be sent to the Chief Information Officer, U.S. Patent and Trademark Office, U.S. Department of Commerce, P.O. Box 1450, Alexandria, VA 22313-1450. DO NOT SEND FEES OR COMPLETED FORMS TO THIS ADDRESS. **SEND TO: Commissioner for Patents, P.O. Box 1450, Alexandria, VA 22313-1450.**

Privacy Act Statement

The Privacy Act of 1974 (P.L. 93-579) requires that you be given certain information in connection with your submission of the attached form related to a patent application or patent. Accordingly, pursuant to the requirements of the Act, please be advised that: (1) the general authority for the collection of this information is 35 U.S.C. 2(b)(2); (2) furnishing of the information solicited is voluntary; and (3) the principal purpose for which the information is used by the U.S. Patent and Trademark Office is to process and/or examine your submission related to a patent application or patent. If you do not furnish the requested information, the U.S. Patent and Trademark Office may not be able to process and/or examine your submission, which may result in termination of proceedings or abandonment of the application or expiration of the patent.

The information provided by you in this form will be subject to the following routine uses:

1 The information on this form will be treated confidentially to the extent allowed under the Freedom of Information Act (5 U.S.C. 552) and the Privacy Act (5 U.S.C. 552a). Records from this system of records may be disclosed to the Department of Justice to determine whether the Freedom of Information Act requires disclosure of these records.

2. A record from this system of records may be disclosed, as a routine use, in the course of presenting evidence to a court, magistrate, or administrative tribunal, including disclosures to opposing counsel in the course of settlement negotiations.

3 A record in this system of records may be disclosed, as a routine use, to a Member of Congress submitting a request involving an individual, to whom the record pertains, when the individual has requested assistance from the Member with respect to the subject matter of the record.

4. A record in this system of records may be disclosed, as a routine use, to a contractor of the Agency having need for the information in order to perform a contract. Recipients of information shall be required to comply with the requirements of the Privacy Act of 1974, as amended, pursuant to 5 U.S.C. 552a(m).

5. A record related to an International Application filed under the Patent Cooperation Treaty in this system of records may be disclosed, as a routine use, to the International Bureau of the World Intellectual Property Organization, pursuant to the Patent CooperationTreaty.

6. A record in this system of records may be disclosed, as a routine use, to another federal agency for purposes of National Security review (35 U.S.C. 181) and for review pursuant to the Atomic Energy Act (42 U.S.C. 218(c)).

7. A record from this system of records may be disclosed, as a routine use, to the Administrator, General Services, or his/her designee, during an inspection of records conducted by GSA as part of that agency's responsibility to recommend improvements in records management practices and programs, under authority of 44 U.S.C. 2904 and 2906. Such disclosure shall be made in accordance with the GSA regulations governing inspection of records for this purpose, and any other relevant (i.e., GSA or Commerce) directive. Such disclosure shall not be used to make determinations about individuals.

8. A record from this system of records may be disclosed, as a routine use, to the public after either publication of the application pursuant to 35 U.S.C. 122(b) or issuance of a patent pursuant to 35 U.S.C. 151. Further, a record may be disclosed, subject to the limitations of 37 CFR 1.14, as a routine use, to the public if the record was filed in an application which became abandoned or in which the proceedings were terminated and which application is referenced by either a published application, an application open to public inspections or an issued patent.

9. A record from this system of records may be disclosed, as a routine use, to a Federal, State, or local law enforcement agency, if the USPTO becomes aware of a violation or potential violation of law or regulation.

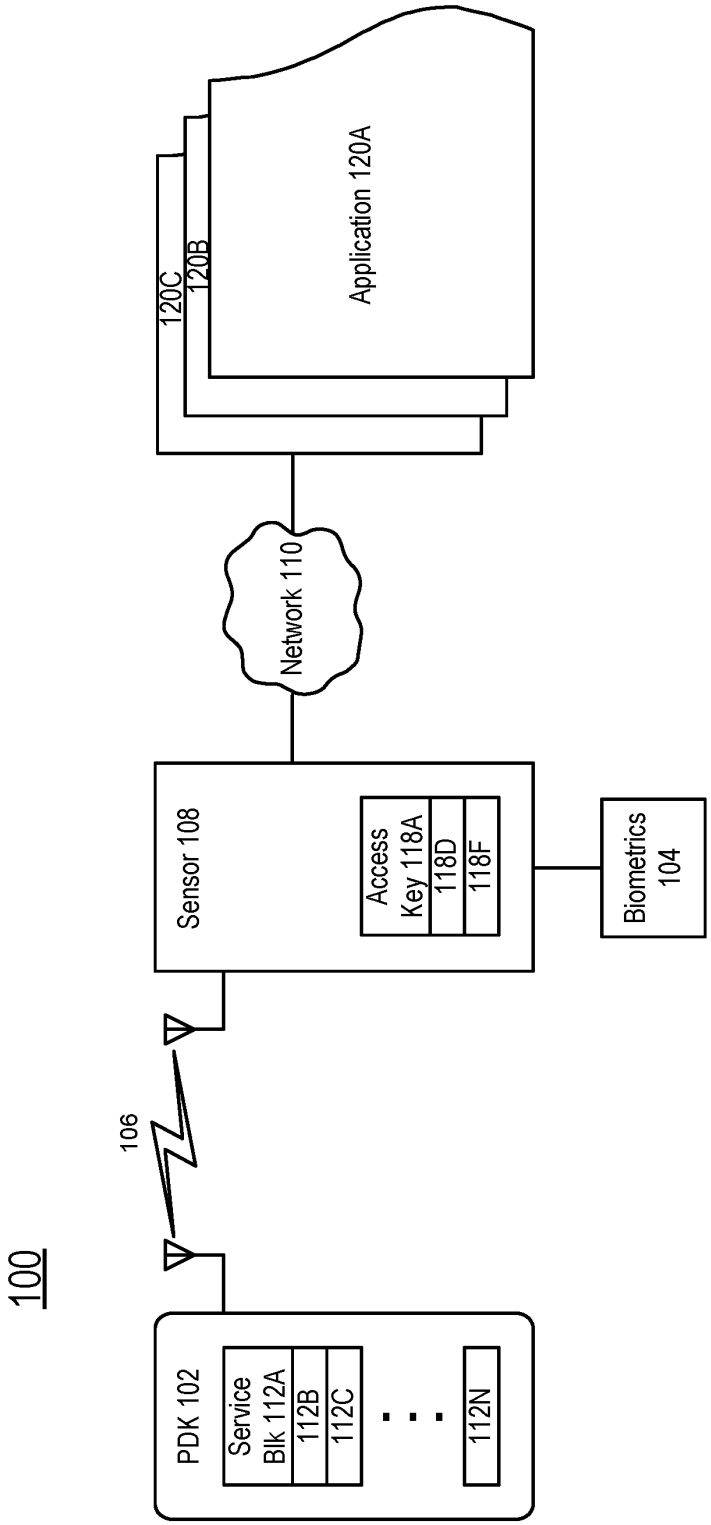
100
PDK 102
Service Blk 112A
112B
112C
112N
106
Sensor 108
Access Key 118A
118D
118F
Biometrics 104
Network 110
120C
120B
Application 120A

FIG. 1

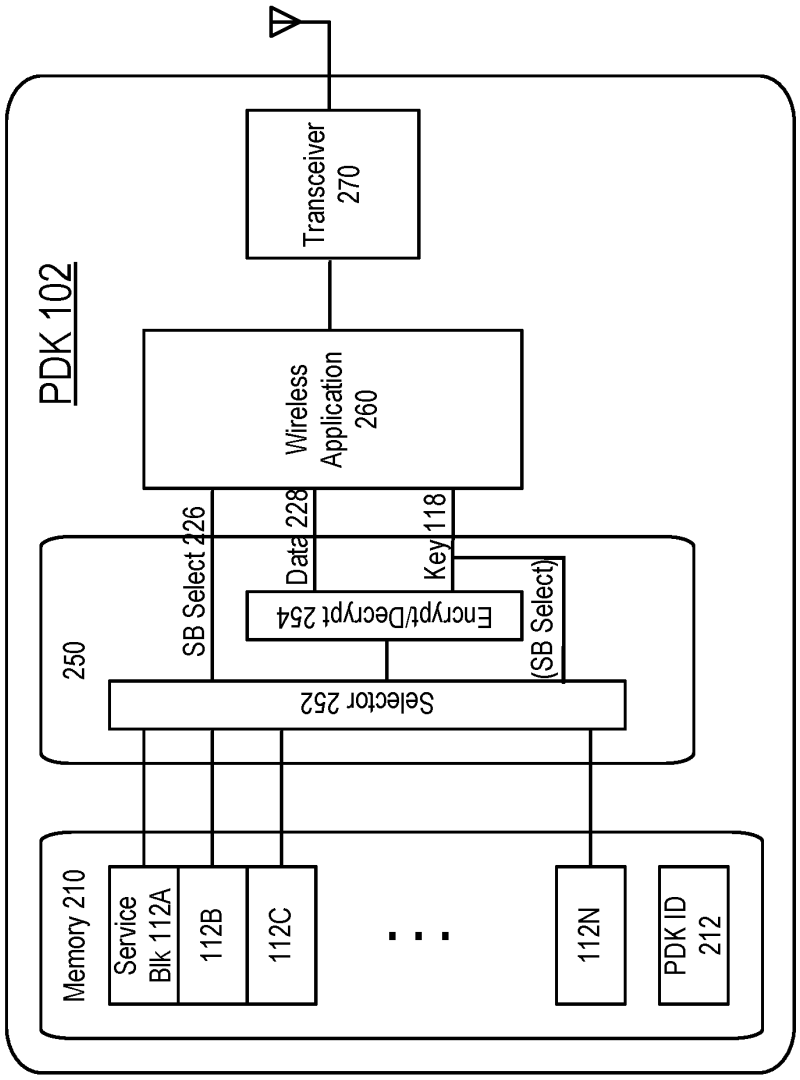
PDK 102
Transceiver 270
Wireless Application 260
SB Select 226
Data 228
Key 118
250
Encrypt/Decrypt 254
(SB Select)
Selector 252
Memory 210
Service Blk 112A
112B
112C
112N
PDK ID 212

FIG. 2

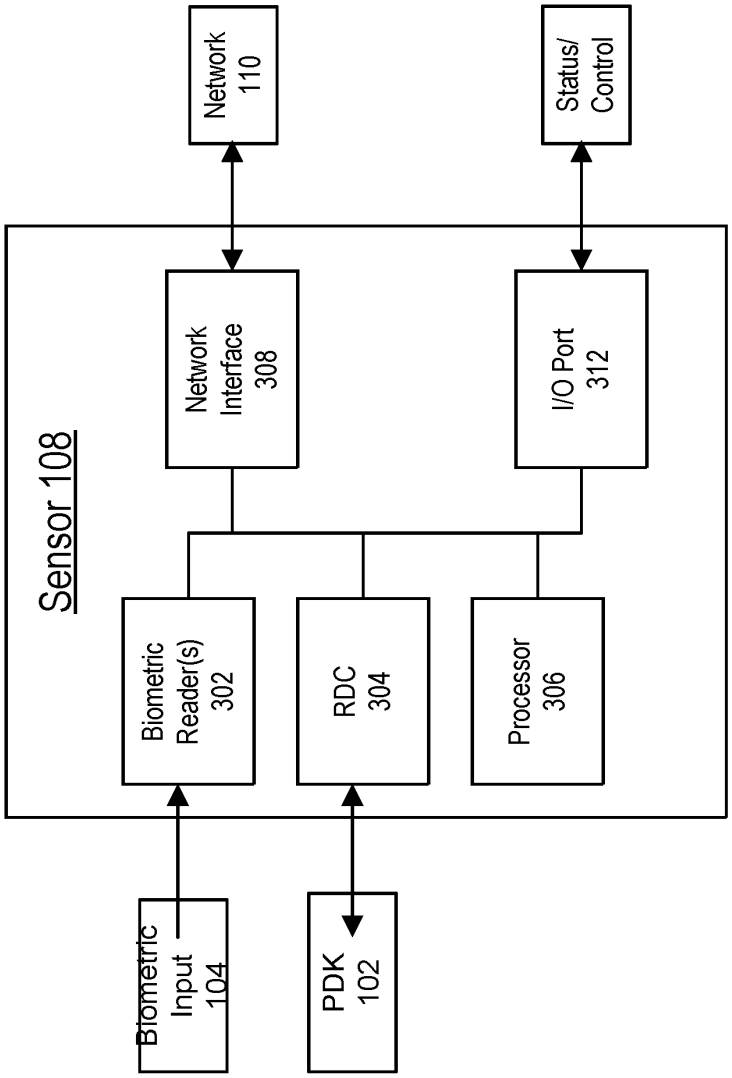
Biometric Input 104
PDK 102
Sensor 108
Biometric Reader(s) 302
RDC 304
Processor 306
Network Interface 308
I/O Port 312
Network 110
Status/ Control

FIG. 3

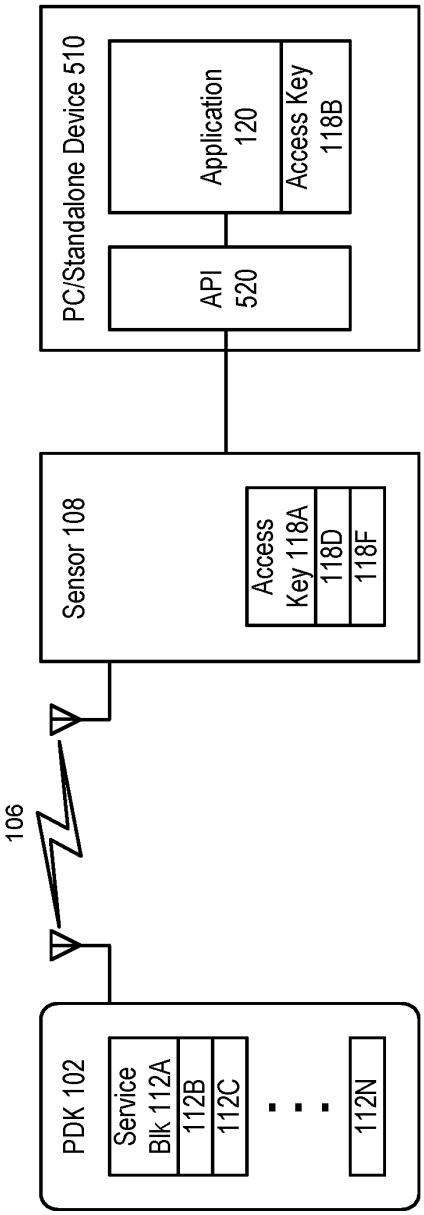
PDK 102
Service Blk 112A
112B
112C
112N
106
Sensor 108
Access Key 118A
118D
118F
PC/Standalone Device 510
API 520
Application 120
Access Key 118B

FIG. 4

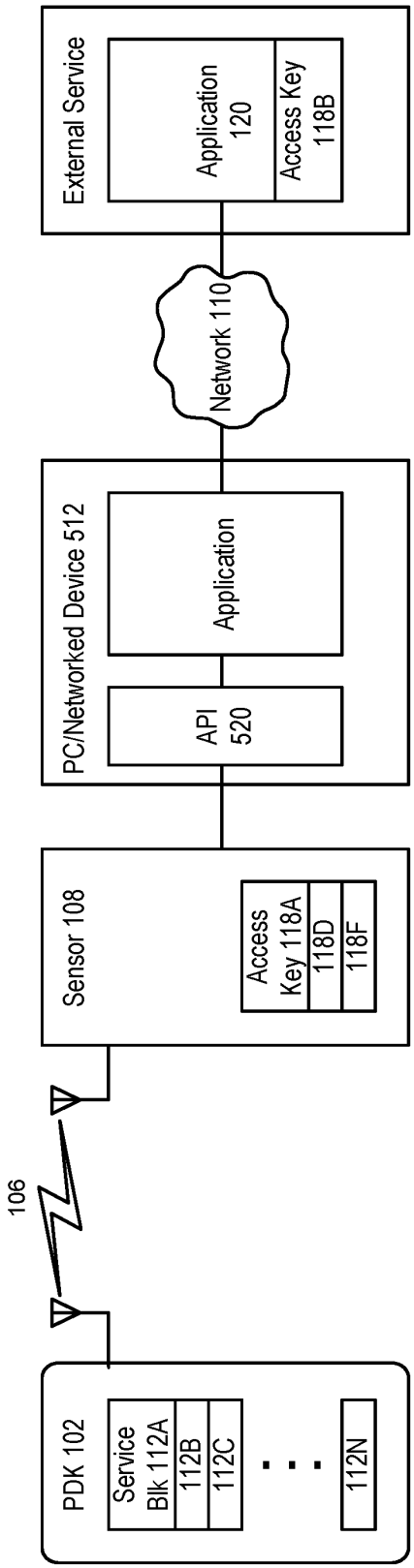
PDK 102
Service Blk 112A
112B
112C
112N
106
Sensor 108
Access Key 118A
118D
118F
PC/Networked Device 512
API 520
Application
Network 110
External Service
Application 120
Access Key 118B

FIG. 5

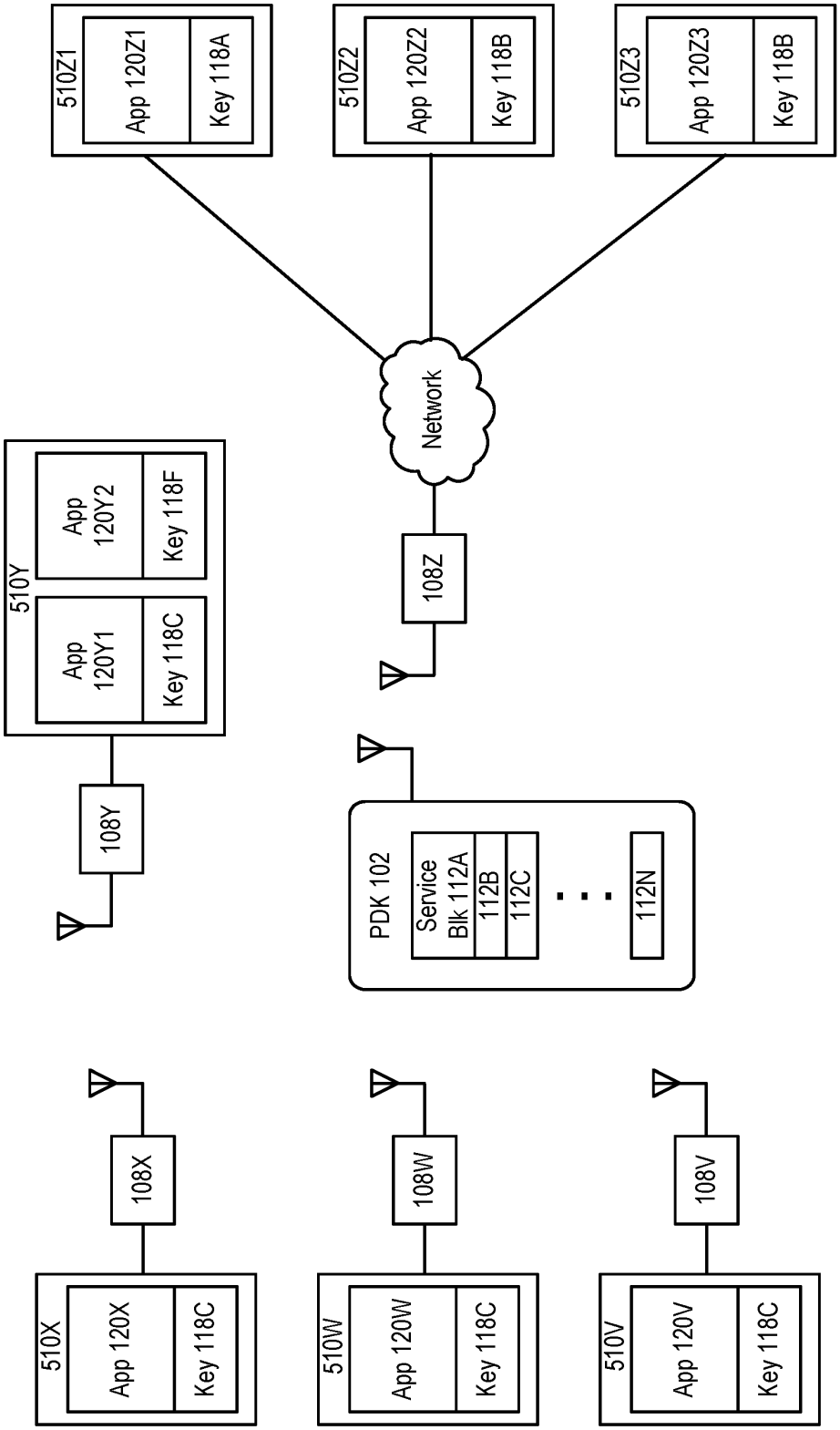
510Z1
App 120Z1
Key 118A
510Z2
App 120Z2
Key 118B
510Z3
App 120Z3
Key 118B
Network
510Y
App 120Y1
Key 118C
App 120Y2
Key 118F
108Z
108Y
PDK 102
Service Blk 112A
112B
112C
112N
510X
App 120X
Key 118C
108X
510W
App 120W
Key 118C
108W
510V
App 120V
Key 118C
108V

FIG. 6

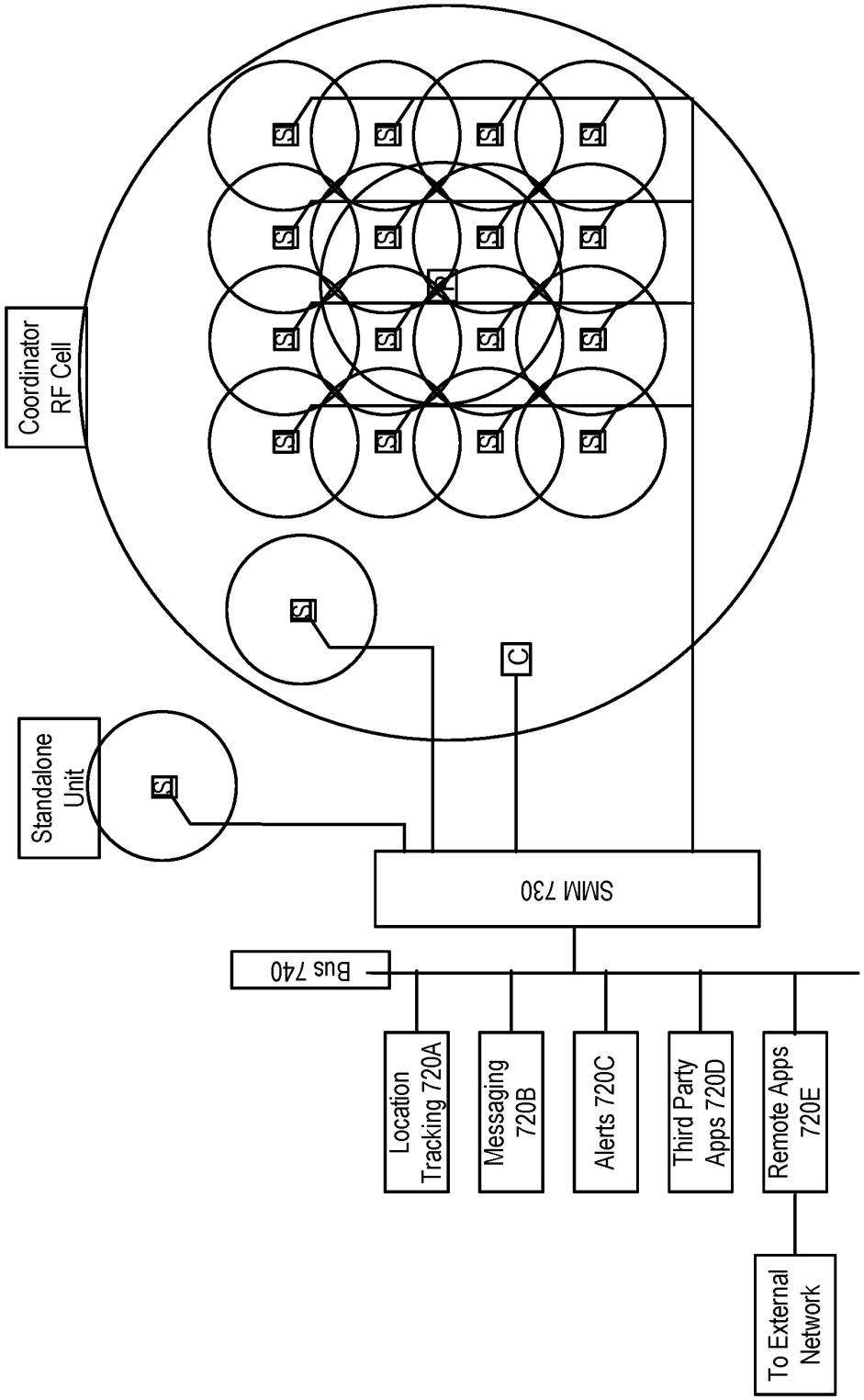
Coordinator RF Cell
Standalone Unit
S
C
SMM 730
Bus 740
Location Tracking 720A
Messaging 720B
Alerts 720C
Third Party Apps 720D
Remote Apps 720E
To External Network

FIG. 7

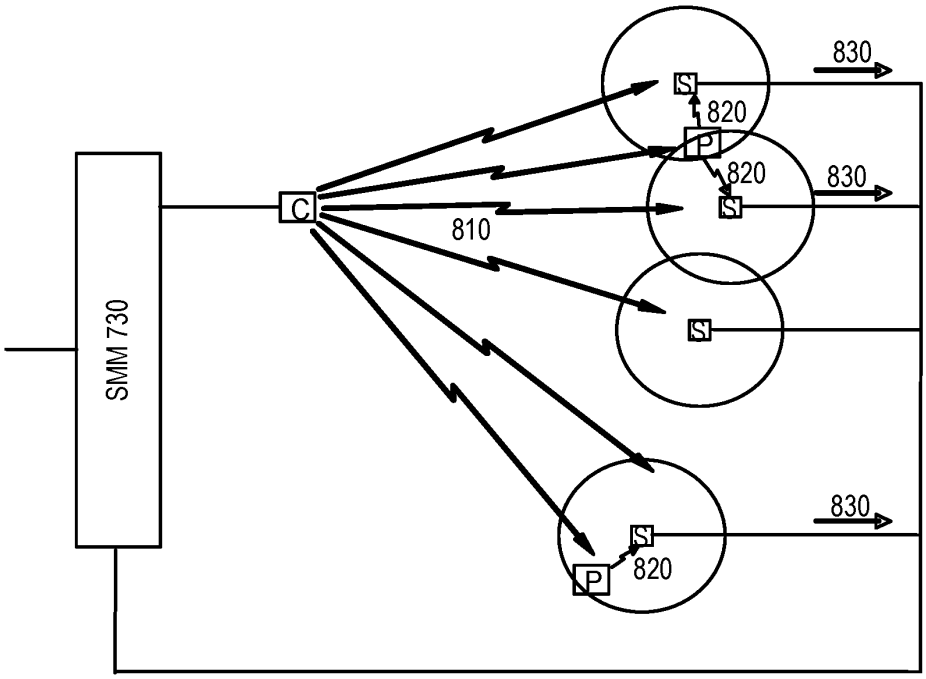
830
S
820
P
820
830
C
S
810
S
SMM 730
830
S
820
P

FIG. 8

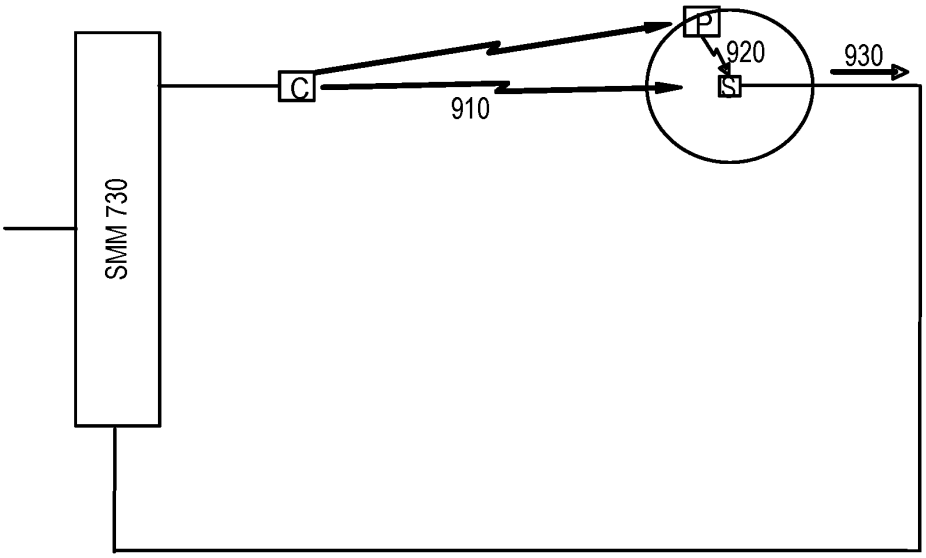
P
920
930
C
S
910
SMM 730

FIG. 9

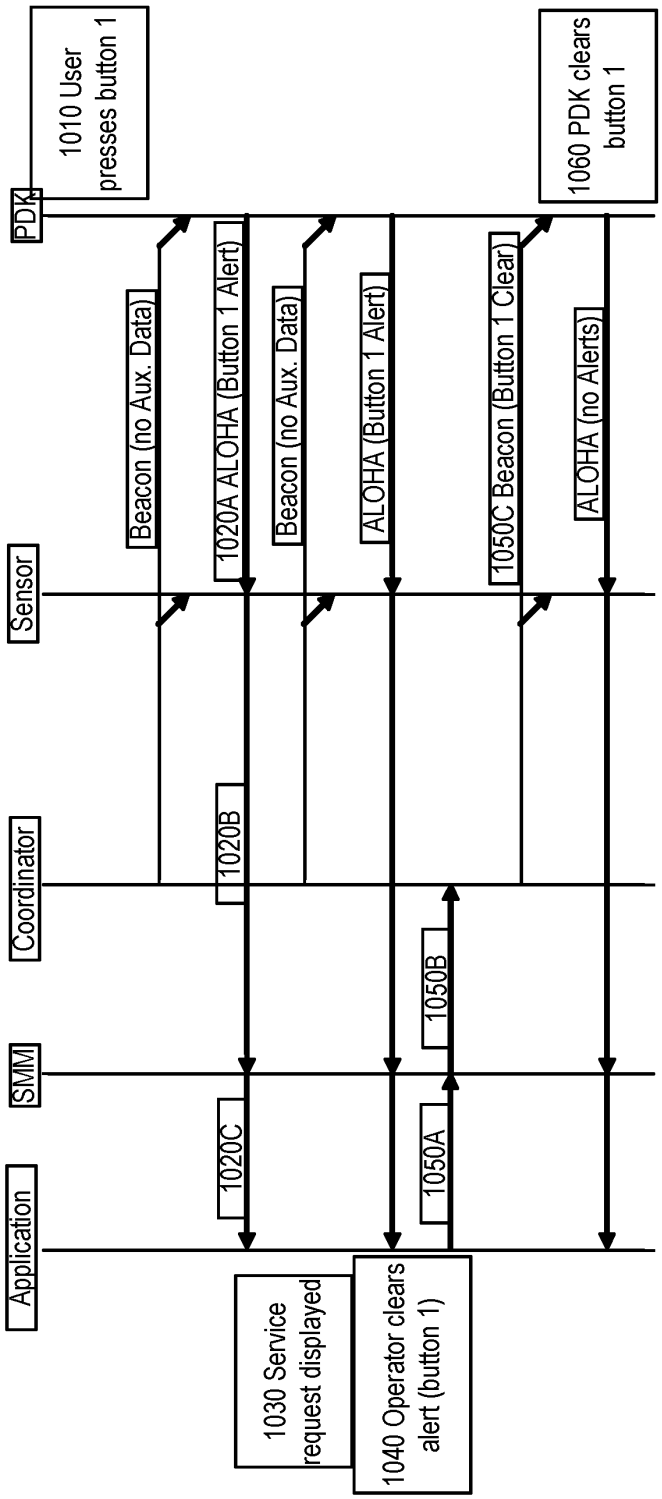
PDK
Sensor
Coordinator
SMM
Application
1010 User presses button 1
Beacon (no Aux. Data)
1020A ALOHA (Button 1 Alert)
1020B
1020C
1030 Service request displayed
1040 Operator clears alert (button 1)
Beacon (no Aux. Data)
ALOHA (Button 1 Alert)
1050A
1050B
1050C Beacon (Button 1 Clear)
ALOHA (no Alerts)
1060 PDK clears button 1

FIG. 10

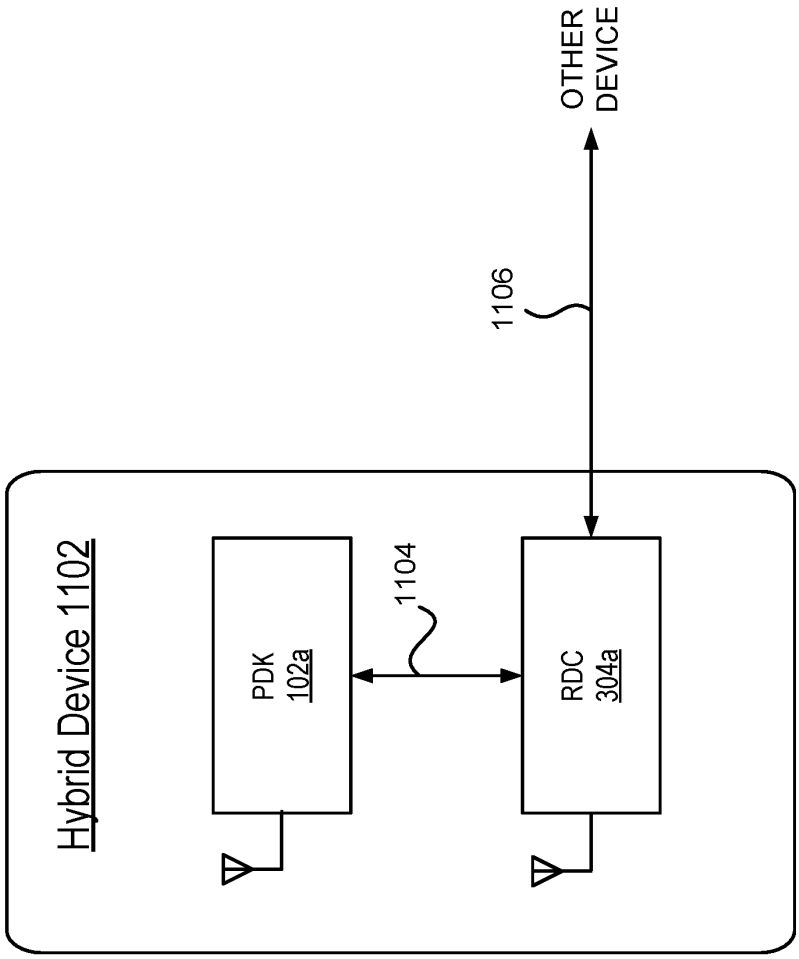

FIG. 11

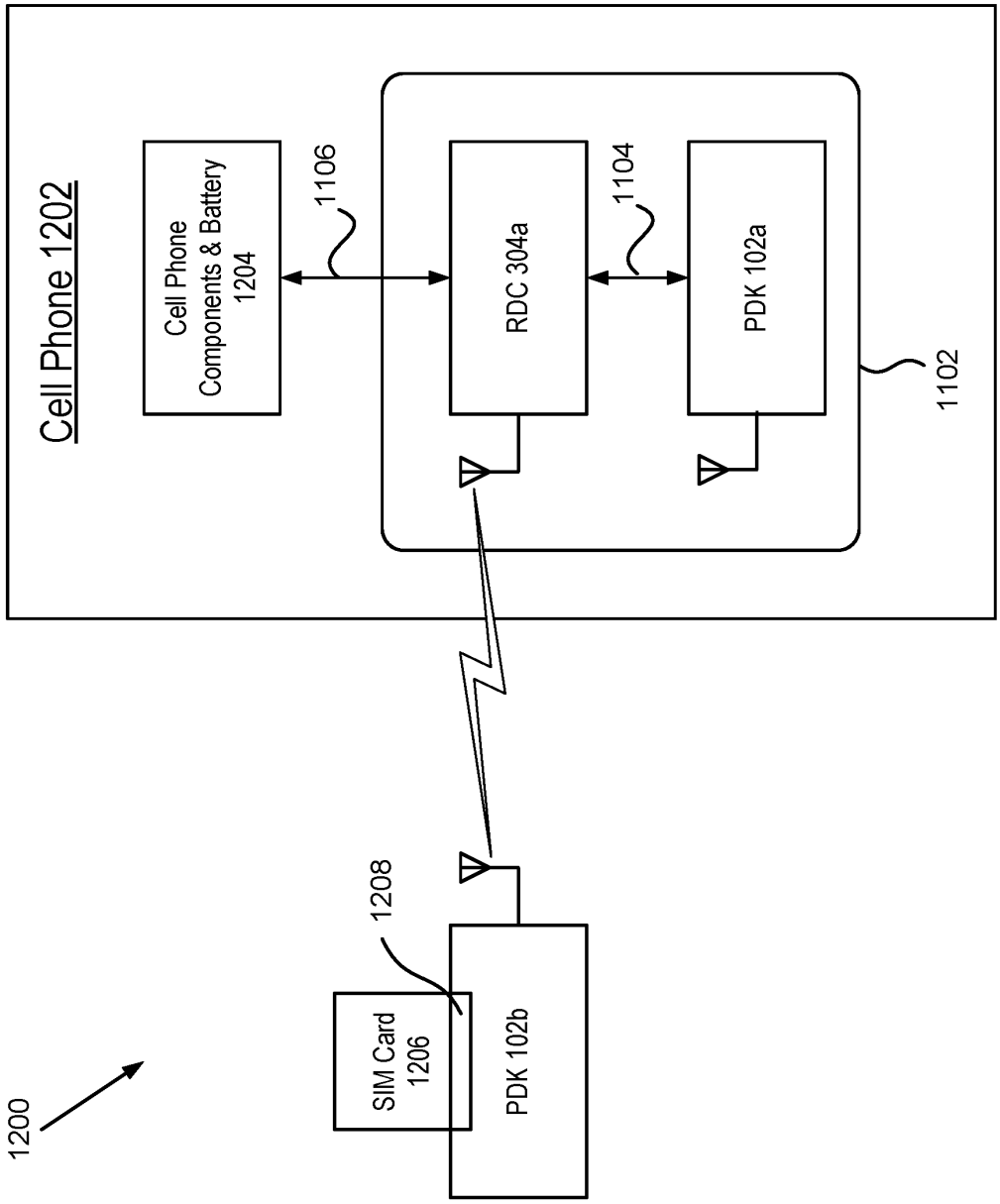
1200
Cell Phone 1202
Cell Phone Components & Battery 1204
1106
RDC 304a
1104
PDK 102a
1102
1208
SIM Card 1206
PDK 102b

FIG. 12

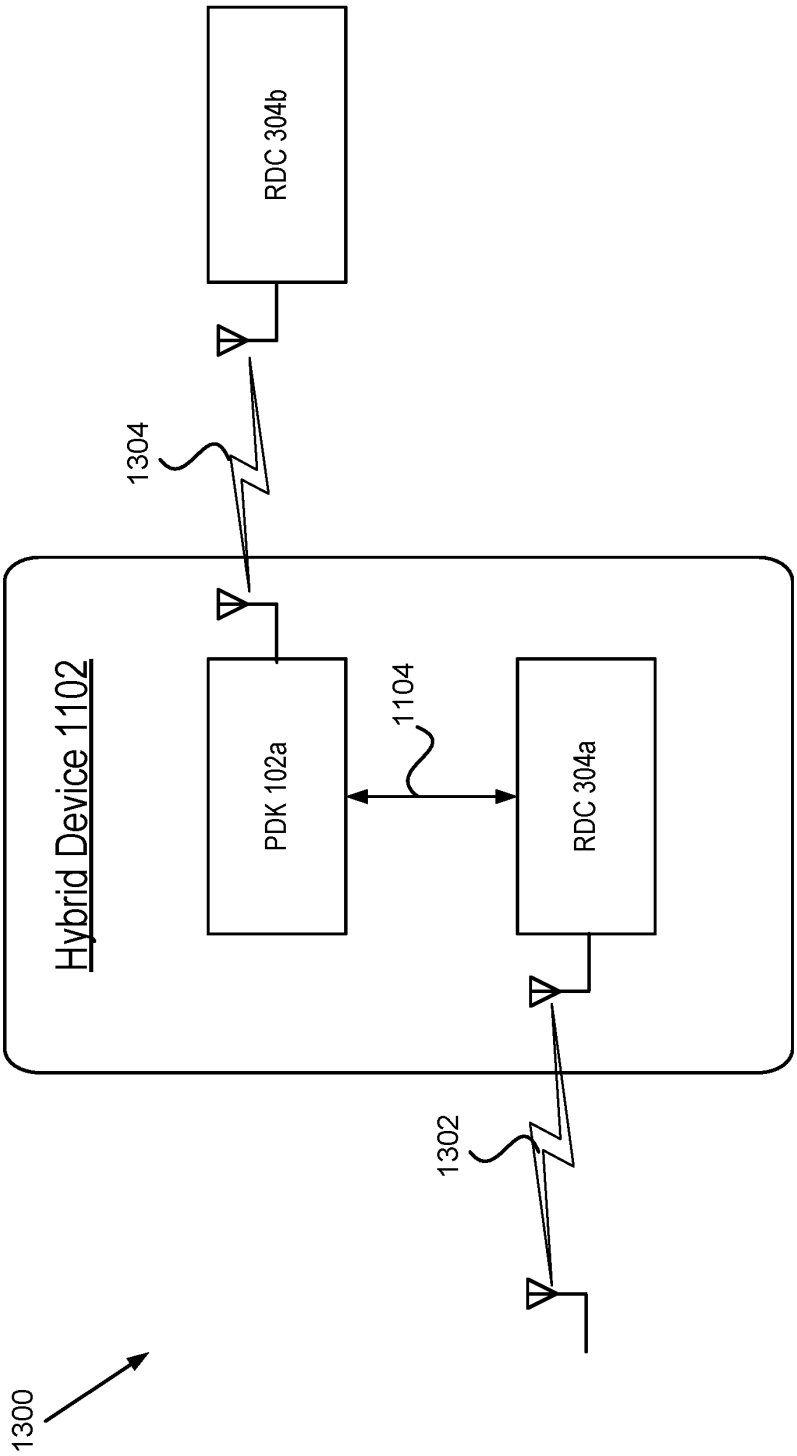
1300
Hybrid Device 1102
PDK 102a
1104
RDC 304a
1302
1304
RDC 304b

FIG. 13

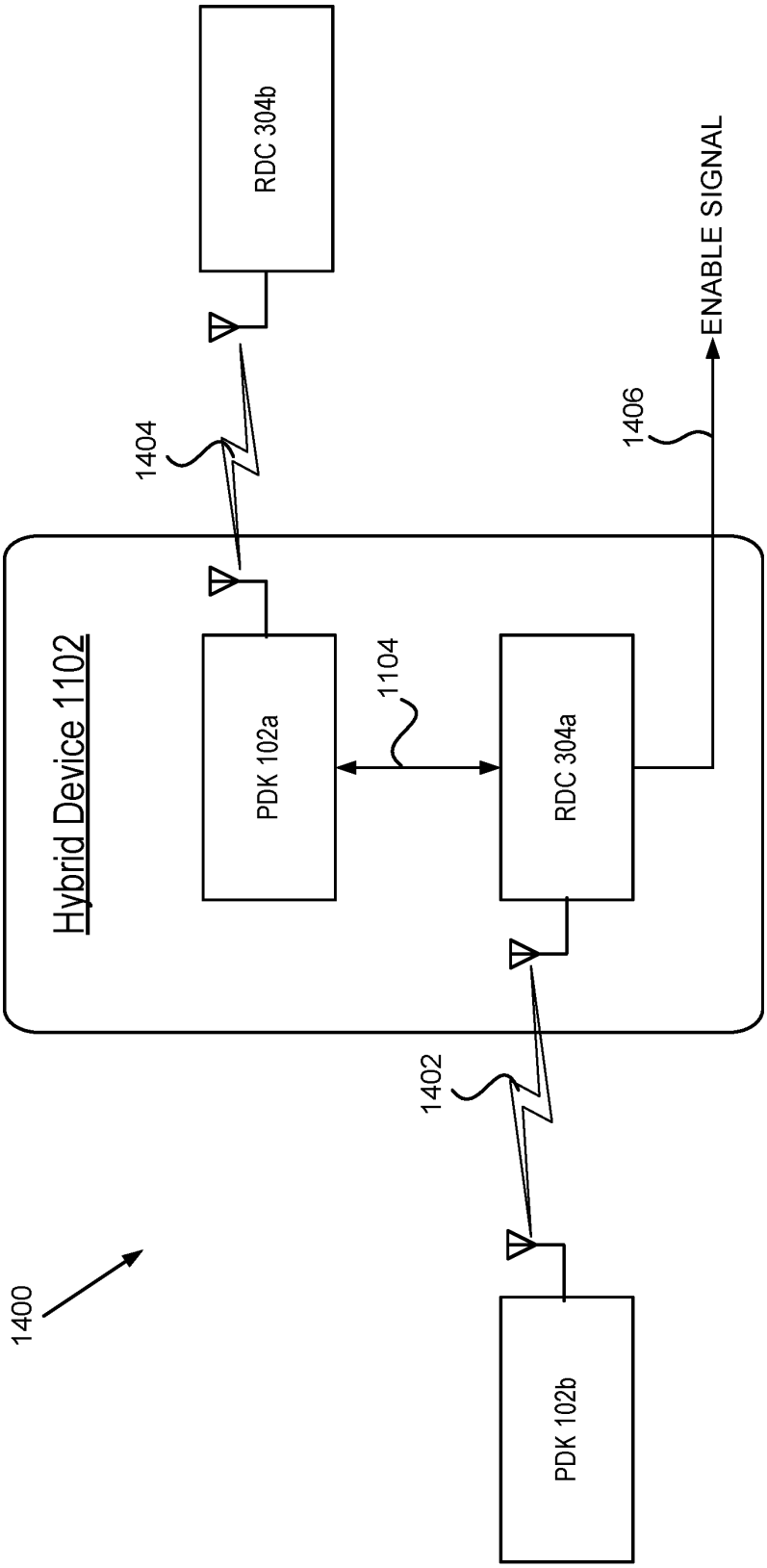
1400
Hybrid Device 1102
PDK 102a
1104
RDC 304a
1402
PDK 102b
1404
RDC 304b
1406
ENABLE SIGNAL

FIG. 14

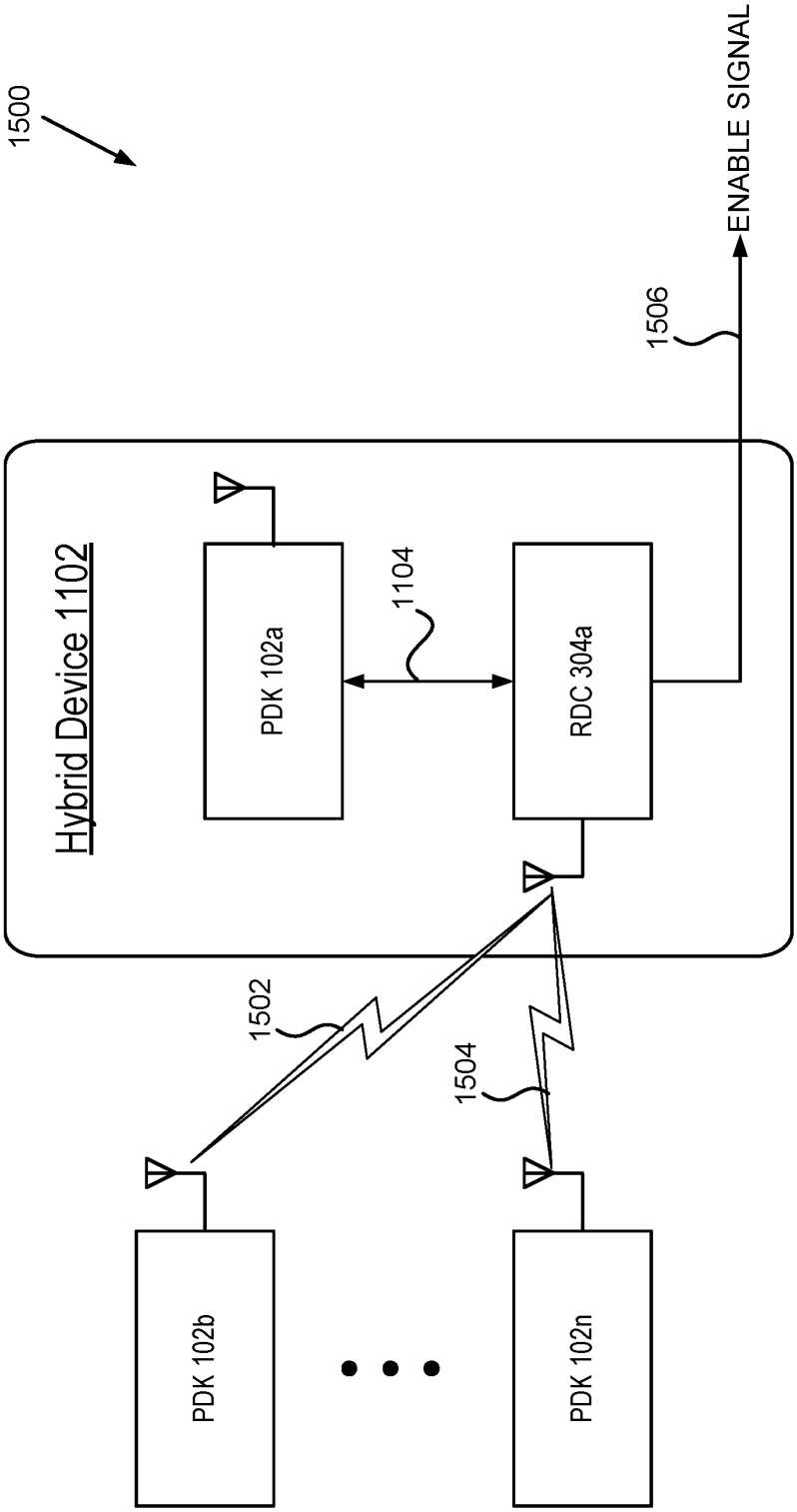
1500
Hybrid Device 1102
PDK 102a
1104
RDC 304a
1506
ENABLE SIGNAL
1502
1504
PDK 102b
PDK 102n

FIG. 15

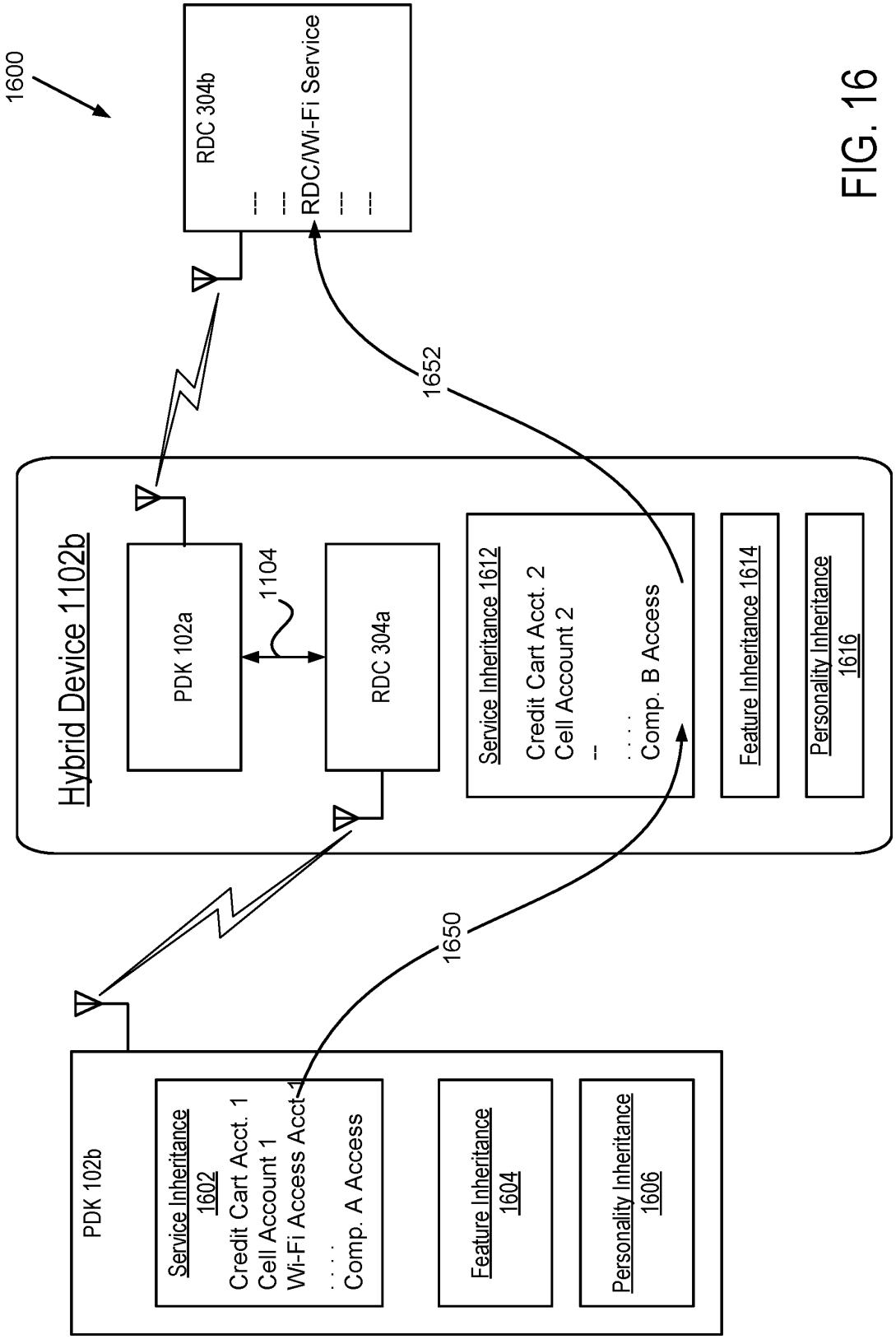
1600
RDC 304b

RDC/Wi-Fi Service

1652
Hybrid Device 1102b
PDK 102a
1104
RDC 304a
Service Inheritance 1612
Credit Cart Acct. 2
Cell Account 2
--
. . . .
Comp. B Access
Feature Inheritance 1614
Personality Inheritance 1616
1650
PDK 102b
Service Inheritance 1602
Credit Cart Acct. 1
Cell Account 1
Wi-Fi Access Acct 1
. . . .
Comp. A Access
Feature Inheritance 1604
Personality Inheritance 1606

FIG. 16

HYBRID DEVICE HAVING A PERSONAL DIGITAL KEY AND RECEIVER-DECODER CIRCUIT AND METHODS OF USE

CROSS-REFERENCE TO RELATED APPLICATIONS

[0001] The present application claims priority under 35 U.S.C. § 120 to U.S. Patent Application 14/677,893 entitled "Hybrid Device Having a Personal Digital Key and Receiver Decoder Circuit and Method of Use," filed April 2, 2015, which claims priority under 35 U.S.C. § 120 to U.S. Patent Application 14/171,705 entitled "Hybrid Device Having a Personal Digital Key and Receiver Decoder Circuit and Method of Use," filed February 3, 2014, now U.S. Patent No. 9,049,188, which claims priority under 35 U.S.C. § 120 to U.S. Patent Application 13/445,825 entitled "Hybrid Device Having a Personal Digital Key and Receiver Decoder Circuit and Method of Use," filed April 12, 2012, now U.S. Patent No. 8,646,042, which claims priority under 35 U.S.C. § 120 to U.S. Patent Application 12/329,329 entitled "Hybrid Device Having a Personal Digital Key and Receiver Decoder Circuit and Method of Use," filed December 5, 2008, now U.S. Patent No. 8,171,528, which claims the benefit of priority under 35 U.S.C. § 119(e) of U.S. Provisional Application No. 60/992,953 entitled "Reverse Prox," filed on December 6, 2007 by David L. Brown, John J. Giobbi and Fred S. Hirt. The entire contents of all of the foregoing are incorporated by reference herein.

[0002] Applicants hereby notify the USPTO that the claims of the present application are different from those of the aforementioned related applications. Therefore, Applicant rescinds any disclaimer of claim scope made in the parent application, grandparent application or any other predecessor application in relation to the present application. The Examiner is therefore advised that any such disclaimer and the cited reference that it was made to avoid may need to be

revisited at this time. Furthermore, the Examiner is also reminded that any disclaimer made in the present application should not be read into or against the parent application, the grandparent application or any other related application.

BACKGROUND

1. FIELD OF ART

[0003] The invention generally relates to personal digital keys and corresponding sensors, capable of proximity detection/location determination and auxiliary data services/application services. Still more particularly, the present invention relates to a hybrid device including a personal digital key (PDK) and a receiver-decoder circuit (RDC) and methods for using same.

2. DESCRIPTION OF THE RELATED ART

[0004] Proximity sensors and location tracking are technologies with many applications. For example, proximity sensors can be used to provide secure access to physical and/or digital assets, based on biometrics, passwords, PINs, or other types of authentication. Proximity sensors typically have advantages of being less cumbersome, easier to use, and more flexible in form factor and implementation. Proximity sensors can be used to control access to resources and/or to authenticate individuals, for example.

[0005] One possible application that can take advantage of proximity sensors is location tracking. RFID tracking is one example. In RFID, RFID tags are attached to objects to be tracked. RFID readers then interact with the RFID tags to determine the location of the tag. Regardless of how it is accomplished, location tracking (i.e., knowledge about the location of an

object or person) is generally useful. For example, location tracking information can be used to track inventory and trace the route of objects through various locations. It can be used for time and motion studies. If tags are attached to people, then tracking of people can be used to better understand their behavior. Knowledge about a person's location (and/or their past locations and projected future locations) could be used to provide better services to that person.

[0006] However, most proximity systems and location tracking systems have limited capabilities. Typically, the proximity sensor, RFID tag or similar device is a dumb device, in the sense that the device is designed and has the capability only to report its location. For example, such devices typically do not have the capabilities to run different applications or to even interact with different applications. Furthermore, these systems typically are proprietary and narrowly tailored for a specific situation, thus preventing easy expandability to other situations or third party applications.

SUMMARY

[0007] Various drawbacks of the prior art are overcome by providing a hybrid device including a personal digital key (PDK) and a receiver-decoder circuit (RDC). The PDK and RDC of the hybrid device are coupled for communication with each other. In one embodiment, the hybrid device also provides a physical interconnect for connecting to other devices to send and receive control signals and data, and receive power. The hybrid device operates in one of several modes including, PDK only, RDC only, or PDK and RDC. This allows a variety of system configurations for mixed operation including: PDK/RDC, RDC/RDC or PDK/PDK. The present invention also includes a number of system configurations for use of the hybrid device including: use of the hybrid device in a cell phone; simultaneous use of the PDK and the RDC

functionality of hybrid device; use of multiple links of hybrid device to generate an authorization signal, use of multiple PDK links to the hybrid device to generate an authorization signal; use of the hybrid device for authorization inheritance and use of the hybrid device for automatically disabling a service or feature.

[0008] Other aspects of the invention include systems and components corresponding to the above, and methods corresponding to all of the foregoing.

BRIEF DESCRIPTION OF THE FIGURES

[0009] FIG. 1 is a block diagram illustrating one embodiment of a system according to the invention.

[0010] FIG. 2 is a block diagram illustrating one embodiment of a Personal Digital Key (PDK).

[0011] FIG. 3 is a block diagram illustrating one embodiment of a sensor.

[0012] FIGS. 4-6 are block diagrams illustrating further embodiments of systems according to the invention.

[0013] FIG. 7 is a block diagram illustrating one embodiment of a system with networked sensors.

[0014] FIGS. 8-9 are block diagrams illustrating operation of the system in FIG. 7.

[0015] FIG. 10 is a diagram illustrating operation of the system in FIG. 7.

[0016] FIG. 11 is a block diagram of one embodiment of a hybrid device in accordance with the present invention.

[0017] FIG. 12 is a block diagram of one embodiment of a system in which the hybrid device is part of a cell phone in accordance with the present invention.

[0018] FIG. 13 is a block diagram of one embodiment of a system using the PDK and the RDC functionality of hybrid device in accordance with the present invention.

[0019] FIG. 14 is a block diagram of one embodiment of a system using the multiple links of hybrid device to generate an authorization signal in accordance with the present invention.

[0020] FIG. 15 is a block diagram of one embodiment of a system using the multiple PDK links to the hybrid device to generate an authorization signal in accordance with the present invention.

[0021] FIG. 16 is a block diagram of one embodiment of a system using the hybrid device for authorization inheritance in accordance with the present invention.

[0022] The figures depict various embodiments of the present invention for purposes of illustration only. One skilled in the art will readily recognize from the following discussion that alternative embodiments of the structures and methods illustrated herein may be employed without departing from the principles of the invention described herein.

DETAILED DESCRIPTION

[0023] FIG. 1 is a high level block diagram illustrating a system for allowing access to multiple applications (or services). The system 100 comprises a Personal Digital Key (PDK) 102, a sensor 108, a network 110 and one or more applications 120 (including services). The sensor 108 is coupled to the PDK 102 by a wireless link 106 and coupled to a network 110 by either a wired or wireless link. In this example, the applications 120 are also accessed over network 110. The sensor 108 is also adapted to receive a biometric input 104 from a user and is capable of displaying status to a user. In alternative embodiments, different or additional resources and databases may be coupled to the network 110, including for example registries and databases used for validation or to check various registrations of the user. In another embodiment, the sensor 108 operates as a standalone device without a connection to the network 110.

[0024] The PDK 102 includes multiple service blocks 112A-N as described in more detail in FIG. 2. Each service block 112 is accessed using a corresponding service block access key 118. In this example, the sensor 108 contains three of the service block access keys 118A, D, F. The service block access keys 118 allow the sensor 108 to unlock information stored in the corresponding service blocks 112, which information is used as local secured information.

[0025] In one example, a biometric is required in order to access specific service blocks 112 in the PDK 102. Verification of the biometric is achieved by using service block 112A. The sensor 108 stores the corresponding service block access key 118A and uses this key to unlock the biometric service block 112A, which stores a valid biometric. A current biometric is received using biometric input 104. The sensor 108 then verifies the stored biometric (from service block 112A) against the recently acquired biometric (from input 104). Upon proper

verification, various applications 120 are permitted to connect to the PDK 102 via the sensor 108 and/or to gain access to other service blocks 112.

[0026] The system 100 can be used to address applications 120 where it is important to authenticate an individual for use. Generally, the sensor 108 wirelessly receives information stored in the PDK 102 that uniquely identifies the PDK 102 and the individual carrying the PDK 102. The sensor 108 can also receive a biometric input 104 from the individual. Based on the received information, the sensor 108 determines if access to the application 120 should be granted. In this example, the system 100 provides authentication without the need for PINs or passwords (although PINs and passwords may be used in other implementations). Moreover, personal biometric information need not be stored in any local or remote storage database and is only stored on the user's own PDK (in one embodiment).

[0027] The credibility of the system 100 is ensured by the use of a PDK 102 that stores trusted information. The PDK 102 is a compact, portable uniquely identifiable wireless device typically carried by an individual. The PDK 102 stores digital information in a tamper-proof format that uniquely associates the PDK 102 with an individual. Example embodiments of PDKs are described in more detail in U.S. Patent Application No. 11/292,330, entitled "Personal Digital Key And Receiver/Decoder Circuit System And Method" filed on November 30, 2005; U.S. Patent Application No. 11/620,581 entitled "Wireless Network Synchronization Of Cells And Client Devices On A Network" filed on January 5, 2007; and U.S. Patent Application No. 11/620,577 entitled "Dynamic Real-Time Tiered Client Access" filed on January 5, 2007, the entire contents of which are all incorporated herein by reference.

[0028] The sensor 108 wirelessly communicates with the PDK 102 when the PDK 102 is within a proximity zone (i.e., within a microcell) of the sensor 108. The proximity zone can be, for example, several meters in radius and preferably can be adjusted dynamically by the sensor 108. Thus, in contrast to many conventional RF ID devices, the sensor 108 can detect and communicate with the PDK 102 without requiring the owner to remove the PDK 102 from his/her pocket, wallet, purse, etc. Generally, the sensor 108 receives uniquely identifying information from the PDK 102 and initiates an authentication process for the individual carrying the PDK 102. In one embodiment, the sensor 108 is adapted to receive a biometric input 104 from the individual. The biometric input 104 comprises a representation of physical or behavioral characteristics unique to the individual. For example, the biometric input 104 can include a fingerprint, a palm print, a retinal scan, an iris scan, a photograph, a signature, a voice sample or any other biometric information such as DNA, RNA or their derivatives that can uniquely identify the individual. The sensor 108 compares the biometric input 104 to information received from the PDK 102 to determine authentication. Alternatively, the biometric input 104 can be obtained by a biometric sensor on the PDK 102 and transmitted to the sensor 108 for authentication. In additional alternative embodiment, some or all of the authentication process can be performed by the PDK 102 instead of the sensor 108.

[0029] In this example, the sensor 108 is further communicatively coupled to the network 110 in order to receive and/or transmit information to remote databases for remote authentication. In an alternative embodiment, the sensor 108 includes a non-volatile data storage that can be synchronized with one or more remote databases or registries. Such an embodiment alleviates the need for a continuous connection to the network 110 and allows the sensor 108 to operate in a standalone mode and for the local data storage to be updated when a connection is

available. For example, a standalone sensor 108 can periodically download updated registry entries and perform authentication locally without any remote lookup.

[0030] In yet another alternative, a standalone sensor 108 may have a pre-configured secure access key 118 and encryption algorithm, or a variable access key 118 that changes, for example based on time and sensor ID. One example application would be a sensor 108 located in a hotel room door, where the sensor could constantly compute a different access key 118 based on time, and the PDK 102 could be associated with this key during the hotel registration process.

[0031] The network 110 provides communication between the sensor 108 and various validation databases and/or registries, in addition to the applications 120. In one embodiment, the network 110 uses standard communications technologies and/or protocols. Thus, the network 110 can include links using technologies such as Ethernet, 802.11, 802.16, integrated services digital network (ISDN), digital subscriber line (DSL), asynchronous transfer mode (ATM), etc. Similarly, the networking protocols used on the network 110 can include the transmission control protocol/Internet protocol (TCP/IP), the hypertext transport protocol (HTTP), the simple mail transfer protocol (SMTP), the file transfer protocol (FTP), etc. The data exchanged over the network 110 can be represented using technologies and/or formats including the hypertext markup language (HTML), the extensible markup language (XML), etc. In addition, all or some of links can be encrypted using conventional encryption technologies such as the secure sockets layer (SSL), Secure HTTP and/or virtual private networks (VPNs). In another embodiment, the entities can use custom and/or dedicated data communications technologies instead of, or in addition to, the ones described above.

[0032] In one aspect, the sensor 108 may connect to a validation database that stores additional information that may be used for authorizing a transaction to be processed at the sensor. For example, in purchase transactions, the sensor 108 may interact with a credit card validation database that is separate from the merchant providing the sale. Alternatively, a different database may be used to validate different types of purchasing means such as a debit card, ATM card, or bank account number.

[0033] In another aspect, the sensor 108 may connect to various registries that store, among other items, PDK, notary, and/or sensor information. In one embodiment, a registry stores biometric or other types of information in an encoded format that can only be recovered using an algorithm or encoding key stored in the PDK. Information stored in the registries can be accessed by the sensor 108 via the network 110 for use in the authentication process. Two basic types of registries are private registries and a Central Registry. Private registries are generally established and administered by their controlling entities (e.g., a merchant, business authority, or other entity administering authentication). Private registries can be custom configured to meet the specialized and independent needs of each controlling entity. A Central Registry is a highly-secured, centrally-located database administered by a trusted third-party organization. In one embodiment, all PDKs 102 are registered with the Central Registry and may be optionally registered with one or more selected private registries. In alternative embodiments, a different number or different types of registries may be coupled to the network 110.

[0034] The service blocks 112 can be used for purposes other than user authentication. For example, information used or produced by an application 120 can be transferred back and forth to the corresponding service block 112. That is, each service block 112 can be used as a

local secure memory for the corresponding application 120. Thus, a service 120B may store certain sensitive information in service block 112B, and a separate service 120C will not be able to access that information without the corresponding access key 118B. In this example, the sensor 108 only holds access keys 118A, D, F and does not hold access key 118B. The application 120B may hold the access key 118B, thus allowing it to access service block 112B but preventing application 120C from accessing the service block 112B. Note that this implementation would also prevent the sensor 108 acting alone from accessing the service block 112B.

[0035] Turning now to FIG. 2, an example embodiment of a PDK 102 is illustrated. The PDK 102 comprises a memory 210, control logic 250, wireless application 260 and a transceiver 270. The PDK 102 can be standalone as a portable, physical device or can be integrated into commonly carried items. For example, a PDK 102 can be integrated into a portable electronic device such as a cell phone, Personal Digital Assistant (PDA), or GPS unit, an employee identification tag, clothing, or jewelry items such as watches, rings, necklaces or bracelets. In one embodiment, the PDK 102 can be, for example, about the size of a Subscriber Identity Module (SIM) card and be as small as a square inch in area or less. In another embodiment, the PDK 102 can be easily contained in a pocket, on a keychain, or in a wallet. The PDK can also contain other components not shown, for example various other inputs, outputs and/or interfaces (serial or parallel).

[0036] The memory 210 can be a read-only memory, a once-programmable memory, a read/write memory or any combination of memory types, including physical access secured and tamperproof memories. The memory 210 typically stores a unique PDK ID 212. The PDK ID 212 comprises a public section and a private section of information, each of which can be used

for identification and authentication. In one embodiment, the PDK ID 212 is stored in a read-only format that cannot be changed subsequent to manufacture. The PDK ID 212 is used as an identifying feature of a PDK 102 and distinguishes between PDKs 102 in private or Central registry entries. In an alternative embodiment, the registries can identify a PDK 102 by a different ID than the PDK ID 212 stored in the PDK 102, or may use both the PDK ID 212 and the different ID in conjunction. The PDK ID 212 can also be used in basic PDK authentication to ensure that the PDK 102 is a valid device.

[0037] The memory 210 also stores the various service blocks 112A-N. Whether a particular service block 112 is stored in volatile or non-volatile memory may be determined by the specific application. In one approach, the original issuer of the PDK defines how the internal memory 210 may be used for service blocks 112. In some cases, the issuer may choose to only allow their service blocks to be stored, in which case third party applications will not be able to store service blocks in memory 210. In other cases, the issuer may allow any third party service 120 to use available service blocks 112. If a new service block is created, then memory for that service block is allocated. The specific location of the service block and generation of the corresponding service block access key can be handled by the PDK 102, or can be handled via an external service.

[0038] Regardless of how created, once created, external applications (such as applications 120 in FIG. 1) can gain access to a specific service block 112 by proving the corresponding access key 118. In FIG. 2, this is shown conceptually by control logic 250. The wireless application 260 on the PDK 102 communicates to the sensor (not shown in FIG. 2) via transceiver 270. The wireless application provides a service block select 226 and a service block access key 118 in order to store, retrieve and/or modify data in a service block 112. The selector

252 selects a service block 112 based on the select signal 226 and the access key 118. The encryption engine 254 encrypts/decrypts data 228 flowing to/from the service block 112 based on the access key 118 (or some other key generated based on the access key, for example a session key). In an alternate method, the service block 112 may be selected based on the service block access key 118, eliminating the need for a separate select signal 226.

[0039] The PDK 102 may also include other data and applications. For example, the PDK 102 typically will include various profiles. Many different types of profiles are possible. A biometric profile, for example, includes profile data representing physical and/or behavioral information that can uniquely identify the PDK owner. A PDK 102 can store multiple biometric profiles, each comprising a different type of biometric information. The same biometric information can also be stored multiple times in a PDK 102. For example, two different applications may use the right index fingerprint, and that biometric information may be stored in two different service blocks, one for each application. In addition, the PDK 102 may also store one or more biometric profile "samples" associated with each biometric profile. Profiles may also store one or more PINs or passwords associated with the PDK owner, or one or more pictures of the PDK owner. A profile can further include personal identification information such as name, address, phone number, etc., bank information, credit/debit card information, or membership information. This information can be useful for transactions.

[0040] The transceiver 270 is a wireless transmitter and receiver for wirelessly communicating with a sensor 108 or other wireless device. The transceiver 270 can send and receive data as modulated electromagnetic signals. Moreover, the data can be encrypted by the transceiver 270 and transmitted over a secure link. Further, the transceiver 270 can actively send connection requests, or can passively detect connection requests from another wireless source.

In one embodiment, the transceiver 270 is adapted to communicate over a range of up to around 5 meters. In another embodiment, the transceiver 270 range can be varied.

[0041] Turning now to FIG. 3, an example embodiment of a sensor 108 is illustrated. The embodiment includes one or more biometric readers 302, a receiver-decoder circuit (RDC) 304, a processor 306, a network interface 308 and an I/O port 312. In alternative embodiments, different or additional modules can be included in the sensor 108.

[0042] The RDC 304 provides the wireless interface to the PDK 102. Generally, the RDC 304 wirelessly receives data from the PDK 102 in an encrypted format and decodes the encrypted data for processing by the processor 306. An example embodiment of an RDC is described in U.S. Patent Application No. 11/292,330 entitled "Personal Digital Key And Receiver/Decoder Circuit System And Method," the entire contents of which are incorporated herein by reference. Encrypting data transmitted between the PDK 102 and sensor 108 minimizes the possibility of eavesdropping or other fraudulent activity. In one embodiment, the RDC 304 is also configured to transmit and receive certain types of information in an unencrypted, or public, format.

[0043] The biometric reader 302 receives and processes the biometric input 104 from an individual. In one embodiment, the biometric reader 302 is a fingerprint scanner. Other embodiments of biometric readers 302 include retinal scanners, iris scanners, facial scanner, palm scanners, DNA/RNA analyzers, signature analyzers, cameras, microphones, and voice analyzers. Furthermore, the sensor 108 can include multiple biometric readers 302 of different types.

[0044] The network interface 308 can be a wired or wireless communication link between the sensor 108 and network 110. For example, in one type of authentication, information is received from the PDK 102 at the RDC 304, processed by the processor 306, and transmitted to external authentication databases through the network interface 308. The network interface 308 can also receive data sent through the network 110 for local processing by the sensor 108. In one embodiment, the network interface 308 provides a connection to a remote system administrator to configure the sensor 108 according to various control settings.

[0045] The I/O port 312 provides a general input and output interface to the sensor 108. The I/O port 312 may be coupled to any variety of input devices to receive inputs such as a numerical or alphabetic input from a keypad, control settings, menu selections, confirmations, and so on. Outputs can include, for example, status LEDs, an LCD, or other display that provides instructions, menus or control options to a user.

[0046] FIGS. 4-6 are high level block diagrams illustrating additional examples of applications accessing service blocks. FIGS. 4 and 5 illustrate that the application 120 need not be located at any particular location on the network. Rather, the service block 112 is accessed from any application 120 that can attach (in a network sense) to the sensor 108.

[0047] In FIG. 4, the sensor 108 attaches to the PDK 102 within its microcell, using service block access key 118(A) and service block 112(A). A personal computer or other standalone device 510 is attached to the sensor 108, either directly or via a network. In this example, the device 510 communicates with the sensor via a standardized API 520. An application 120 executes on the device 510 and has access to the service block access key

118(B). It uses this key to gain access to the corresponding service block 112(B). This is an example of a local application 120.

[0048] FIG. 5 illustrates a remote application. In this example, the sensor 108 attaches to the PDK 102 in the same manner as FIG. 4, using service block access key 118A and service block 112A. However, application 120 is not executing on a local device. Rather, it executes remotely. Here, it is shown as an external service 120. However, service 120 can still gain access to service block 112B by use of service block access key 118B, although it does so via network 110 and intermediate device 512. Although the sensor 108 is the device that attaches to the PDK 102, a local or remote application 120 with the right credentials may store or retrieve information in a service block 112 in the PDK 102.

[0049] The PDK itself can also be configured to prevent the same source from repeating invalid access attempts to the PDK's service blocks. The PDK may monitor access to the service blocks. When an attached service makes multiple unsuccessful attempts to unlock a service block, the PDK tracks this and eventually ignores the requests from that service for a period of time. Alternately, the PDK may disconnect from the network or take other actions.

[0050] An example of a local application (FIG. 4) is an auto login/logoff of a personal computer. When a PDK 102 is within the proximity of the personal computer 510, the PDK 102 is detected and the sensor 108 attaches to the PDK 102 (using service block 112A). The login/logoff application 120 then sends the service block access key 118B along with a request for the contents of the service block 112B to the PDK 102 via the sensor 108. For example, a standard may specify that particular service block 112B contains username and password. These are returned to the application 120, allowing automatic login to the personal computer 510.

[0051] An example of a remote application (FIG. 5) is a credit card transaction. The sensor 108 in this case could be a credit card terminal. When the PDK 102 is brought in close proximity, the credit card terminal 108 attaches to the PDK 102 (using service block 112A). The terminal 108 then sends the PDK ID 212 to the credit card issuer (the external service) for identification. The credit card issuer may then send a service block access key 118B back to the sensor 108, where it is passed on to the PDK 102 to unlock a specific service block 112B. The contents of the service block 112B could then be sent back to the credit card issuer where further decryption could occur and the credit card holder could be verified. Once verified, the credit card terminal displays that the transaction is approved.

[0052] These two examples illustrate basic concepts of the capabilities of the service blocks and how an application (service) may use them. Since service blocks preferably are both readable and writable, services may use them as they see fit (i.e. debit, username/password, credit card information, etc.). In some sense, the service block acts as a secure local memory on the PDK.

[0053] FIGS. 4 and 5 illustrate a basic case where a single application accesses a single service block on a single PDK via a single sensor. The invention is not limited to this case. FIG. 6 illustrates a case with multiple applications, sensors, and service blocks. This illustrates the sharing of service blocks. As shown, service blocks may be limited to a single service or source or may be shared across multiple services and sources. A service block 112 is a protected memory element which allows an application 120 with the right credentials to access it. In this example, applications 120W, 120X and 120Y1 can each access service block 112C since each application has access to service block access key 118C. Similarly, applications 120V, 120Z2 and 120Z3 can each access service block 112B. Although not shown in FIG. 6, it is also possible

for an application to access more than one service block. FIG. 6 also shows a situation where applications 120Z1-3 running on different devices 510Z1-3 all access the PDK 102 through the same sensor 108Z. Each sensor 108 covers a certain proximity zone (i.e., microcell). The presence of the PDK 102 within a microcell indicates proximity of the PDK to that particular sensor.

[0054] Also shown is a device 510Y with two applications 120Y1 and 120Y2, each of which accesses a different service block. In some cases, the first application 120Y1 is enabled from a first service block 112C, thus allowing a second application 120Y2 to operate using a second service block 112F (although the two applications need not be on the same device 510). For example, the first application 120Y1 might be the auto login/logoff, where a user logs in to a personal computer via a service block 112C that provides a username and password. Now that the user is logged in, the user wishes to attach to his credit card company. The user types in the web address of the credit card provider, where the credit card provider requests the user's credentials. First, the user may have to provide some live biometric information. Application 120Y2 compares this against a biometric stored in a second service block 112F on the PDK. After the sensor108Y verifies the correct biometrics, the sensor indicates to the PDK that external services may now access their service blocks. The credit card provider 120Z1 then sends its service block access key 118A to the PDK where this third service block 112A is retrieved and sent back to the credit card issuer. The credit card issuer then verifies the data and authorizes the user's transaction.

[0055] Furthermore, although the above scenarios focus mostly on service blocks in the PDK, applications may also use the basic authentication function that allows the PDK and sensor to verify each other. In this scenario, once the sensor and PDK finish their verification the

application is signaled. The application may then use this information as an assurance that the PDK is a legitimate device (but not necessarily that the holder of the device is legitimate).

[0056] In certain cases, access to a service block 112 may allow the application 120 to access various input/outputs on the PDK. For example, the PDK may have several inputs and/or outputs, as well as a serial (or other) interface. The inputs may be either transition triggered or level triggered. An example of a transition triggered event might be a button press, where level triggered might be turning a switch on. Multiple outputs may also exist where they may also be pulsed or level outputs. Finally an interface may allow attachment of an external device, which may then send data through the PDK to the application. In many cases, the inputs and outputs may be simple push button switches and LEDs used to allow a user to interact with an application.

[0057] Since the number of applications is limitless, different applications may use the inputs and outputs for different functionality. For example, a user walking into a casino may require attention from a service representative and if the casino has enabled button 1 for this functionality, when the user depresses button 1, an attendant is alerted with information related to the user and the location of the user. In a different application, an actual button may not exist, but it may be tied to an output of another device indicating when a piece of equipment was in use. Whenever the device was in use, the PDK transmits the input 1 active alert back to the backend application. The backend application may then be using this information to determine when the equipment must be recalibrated based on its usage.

[0058] This is also true for outputs and any interfaces. Outputs may be used to turn on a light or sound an audible tone used to locate an asset in a building. For example, there may be

20 pieces of equipment in a room which all show up using a location tracking program, but the user would then have to sift through each piece of equipment until the right one is located. Using an output as described above, a light could be lit and the equipment could be immediately located within the room. The interface allows another attached application to the PDK to send information to an end application attached to the sensor. In this case the sensor provides a medium to push data to an external source.

[0059] FIG. 7 is a high level block diagram illustrating one embodiment of a system with networked sensors. In this example, multiple sensors (marked "S") are attached to a Sensor Management Module (SMM) 730. The SMM 730 provides data routing for the sensors (e.g., to and from applications 720A-E). In this example, the SMM 730 also receives data from the sensors and processes this data to provide location tracking of PDKs (marked "P") that are within the sensor field. In this implementation, the system also includes an application layer message bus 740, over which the SMM 730 and applications 720 can exchange messages. This allows multiple applications 720 to simultaneously communicate with PDKs and make use of the location tracking of the PDKs. The application layer message bus 740 may also be extended to other applications via a remote application interface.

[0060] In FIG. 7, each sensor's microcell (i.e., proximity zone) is denoted by a circle around the sensor. Similarly, the PDK's range is shown by the heavy larger circle. In the example shown, the PDK is in range of four different sensor zones and any of the four sensors may establish communications to the PDK. Using a network topology as shown, the SMM may instruct a specific sensor to attach to the PDK. Once established, the communication link will allow the PDK to communicate with various applications 720, in this example via the SMM 730

and bus 740. Applications 720 will be able to access service blocks on the PDK through the use of service block access keys, as described above.

[0061] In addition, in this example, the sensors are at known locations, preferably at fixed locations. For example, sensors may be distributed throughout a building or other structure or site (including outdoors). The sensors interact with the PDK in a manner that allows the sensors to gather position data about the PDK. This position data is sent by the sensors to the SMM 730, which processes the data to determine the PDK's position and to provide location tracking of the PDK over time. The position and/or location tracking information can then be made available to applications 720 via bus 740, in addition to allowing the applications 720 to communicate with the PDK.

[0062] Location tracking of the PDK by the sensor network can be achieved in different ways, one of which will be described below. The example in FIG. 7 uses a coordination module (marked "C") or simply coordinator, although this is not required in other implementations. The large dashed circle shows the coordinator's cell. In this example, the sensors preferably contain two transceivers, one to communicate with the coordinator on what will be referred to as the control channel and another to communicate with the PDK on what will be referred to as the traffic channel.

[0063] FIG. 8 illustrates operation of the system in FIG. 7. The coordinator C broadcasts 810 a periodic beacon on a control channel. The sensors and PDKs synchronize to this periodic beacon. On the control channel, when a sensor is not receiving the broadcasted beacon, it is timesharing between listening for a PDK ALOHA response and possibly sending a command to a specific PDK. The PDK, after detecting the beacon, remains on the control channel and

continues to periodically wake up, receive the beacon, and realign its timing. By using system related information found in the beacon and its own serial number, the PDK calculates the wakeup time to synchronize to the beacon and broadcast 820 an ALOHA response. As shown, the PDK's broadcasted ALOHA response may overlap several sensors causing multiple sensors to receive the information simultaneously. Each sensor that receives an ALOHA response from a PDK performs a store and forward 830 of the responses to the SMM 730 on a periodic basis.

[0064] The coordinator and sensors communicate to the SMM 730 via a backend network. This communications method used to attach each device to the SMM may be wired or wireless provided it has the bandwidth required to transport the information between the devices. When a PDK ALOHA response is detected by a sensor, the sensor collects information such as the PDK ID, receiver signal strength indication, and timestamp. After receiving this information from the sensors, the SMM independently applies the new information for each PDK from the sensors, to the previous history of that PDK and through location deterministic algorithms computes the most likely sensor microcell in which the PDK is located. There are multiple known algorithms for doing so. In one approach, location (proximity) is determined based on prior location history, time at the current location, RF signal strength and geographic contours. The SMM may also store the raw data for further alternate processing methods or for diagnostic purposes.

[0065] The SMM 730 can broadcast this information on the application layer messaging bus 740 for applications 720 to use. For example, one application 720A might be a location tracking application with a graphical user interface that shows the current position or trail of the PDK. The SMM 730 (or applications 720) may also store the location information and make it available on an on-demand basis.

[0066] In this particular example, access is allocated using a time division multiple access (TMDA) system, where an RF logical channel is distributed over time and each device has a specific period known as a timeslot in which they are allowed to respond. Each timeslot has a preamble and timeslot synchronization character followed by a packet, and lastly a guard period. The content of each packet is dependent on the source device, channel type (control or traffic), and timeslot location.

[0067] For example, the coordinator broadcasts the beacon on a period basis. All sensors and PDKs receive the beacon. Each PDK then broadcasts its ALOHA response at a specific timeslot allocated for that purpose. In addition to the handshake messages that occur on the control channel, the beacon and ALOHA response may also carry auxiliary data. This data may be in the form of an alarm indication, command/status, or user/application data, for example. It could be provided by an end application, SMM network command, external device interface (such as a terminal interface), or via an internal alarm functions such as low battery, input signal change, or setting an output signal polarity.

[0068] After an ALOHA response is broadcast from a PDK, the PDK listens for a command from nearby sensors. Based on the type of PDK and time it is present in one geographical location, one or more nearby sensors that detected the ALOHA response, may also send additional paging or auxiliary data in the sensor command response timeslot for a specific PDK.

[0069] Other timeslots can be allocated to traffic channels and/or to other messages over the control channel. Various TDMA approaches can be used to allocate the wireless communications channel. Non-TDMA approaches can also be used.

[0070] The sensor network system of FIG. 7 provides a closed loop system. With the SMM 730 being the central hub, broadcasting auxiliary data through the coordinator (and sometimes sensor devices) and collecting PDK auxiliary data through the sensors, it is possible to determine if in an asymmetrical system a command was successfully completed.

[0071] FIG. 9 illustrates an example of how the closed loop system works. In step 910, the SMM 730 (via the coordinator) broadcasts a beacon that also contains auxiliary information. This auxiliary information contains a command from an application 720 to be executed by the PDK. Assume that, for this particular command, the PDK is expected to acknowledge execution of the command. After the PDK executes the command, the PDK sends 920 the acknowledge message as auxiliary data in one of the PDK's ALOHA responses. The sensor receives the ALOHA response and passes 930 the information back to the SMM 730. The SMM 730 has now verified that the command was successfully executed. Such commands could be as simple as set an output to turn on a light or generate an audible sound. It is also possible that an application 720 attached to the SMM 730 may request to pass data to the specific PDK where that data may then be passed to an external terminal application where the system acts only as a transport mechanism. In this mode, the applications attached at each end would be responsible for verifying and acknowledging the data was sent and received successfully.

[0072] A second example is shown in FIG. 10, where the PDK initiates an alert. The coordinator periodically transmits a beacon and the PDK periodically returns an ALOHA response. In the example, a user carrying a PDK is located within a service oriented business, such as a department store, casino, restaurant, etc. The user desires to talk with a service representative from the organization and depresses 1010 the service button on their PDK (button 1). The next time the PDK wakes up to send an ALOHA response, the PDK attaches the button

1 alert to the ALOHA messages and broadcasts 1020A it. A local sensor receives the location response containing the button 1 alert and eventually sends 1020B the received ALOHA responses back to the SMM. The SMM may reformat the data and passes 1020C the indication back to the application. The application then indicates 1030 a button 1 request from the particular PDK serial number (and other related user information) on the application console. The PDK continues to send back the button 1 alert until cleared or a timeout period occurs. This allows devices that have inadequate coverage (e.g., on the edge of a cell boundary) to continue to send the alert until detected.

[0073] Eventually the console operator becomes aware of the service request and dispatches a representative to the user and clears 1040 the button1 alert on the console. The clear button 1 alert is then sent 1050A-B to the coordinator where it is queued to go out 1050C on the proper beacon when the PDK will be awake. Once the PDK wakes up and receives 1050C its next beacon, the PDK clears out 1060 the button 1 alert indicator and returns to a basic ALOHA state with no auxiliary data pending.

[0074] The example shown may have also had a visible indicator in the PDK where the visible indicator may have become lit when the button was depressed. Once the button 1 alert was cleared the indicator would be unlit.

[0075] In this example, neither the application nor SMM verified the PDK actually received the clear button 1 alert. In one approach, each auxiliary message (page, alert, etc.) sent by a device contains a sequence number. If a device continues to send the information after it is acknowledged or cleared, the device is aware of the condition because of the sequence number.

Any time a new auxiliary message is sent, the sequence number is incremented to alleviate the confusion as to how new or old any message is.

[0076] For some systems, redundancy is important. Redundancy can be implemented in the example system of FIG. 7 in a number of ways. For example, it is possible to provide multiple coordinators where these coordinators can be used to extend a coverage area or as a redundant backup. In one approach, each coordinator broadcasts its beacon on the same RF channel with a slight timing offset from the other coordinators. This creates a simulcast system where if one coordinator fails, the second coordinator can still resume system operation. This may also counter the issues of multipath by providing spatial diversity with the coordinators. Another redundancy measure is that information can be sent to PDK via the sensors, in addition to or in place of the coordinator. Another example of redundancy is that multiple sensor may receive messages from the PDK so there may be multiple paths back to the SMM via different sensors.

[0077] Referring now to FIG. 11, one embodiment of a hybrid device 1102 in accordance with the present invention will be described. The hybrid device 1102 comprises a PDK 102a and an RDC 304a. Depending on the embodiment, the hybrid device 1102 utilizes the PDK functionality, the RDC functionality or both the PDK functionality and the RDC functionality. Those skilled in the art will recognize that in other embodiments, the hybrid device 1102 has multiple instances of PDK functionality or multiple instances of the RDC functionality or multiple instances of both. As illustrated in FIG. 11, the PDK 102a is coupled by signal line 1104 to the RDC 304a. This direct coupling allows the PDK 102a and the RDC 204a to communicate control signals and data for various applications will be described below. The signal line 1104 is also used to provide power to the PDK 102a via the RDC 304a in

configurations where the RDC 204a is coupled to a power source via signal line 1106. In this embodiment, the RDC 304a is also coupled to signal line 1106 for communication with other devices (not shown). The signal line 1106 can be used to send and receive control signals and data as well as to receive power. Thus, in certain embodiments, the hybrid device 1102 need not have its own independent power source. Moreover, in other embodiments not shown, signal line 1106 is coupled directly to the PDK 102a to provide power.

[0078] In one embodiment, the PDK 102a is similar to the PDK 102 described above with reference to FIG. 2 and includes the same functionality as described above. Those skilled in the art will recognize that in other embodiments, the PDK 102a includes less functionality than that described above with reference to FIG 2. In a minimal embodiment, the PDK 102a includes an antenna and a transceiver for communicating with a RDC (not shown) and a controller and memory for storing information particular to a user. In yet other embodiments, the PDK 102a includes functionality beyond that described above with reference to FIG. 2. The PDK 102a implements the PDK functionality as will be described below with reference to FIGS. 11-16 using a processor and memory of the PDK 102a.

[0079] For simplicity and ease of understanding, the hybrid device 1102 is shown as including an RDC 304a. In one embodiment, the RDC 304a is similar to that described above with reference to FIG. 3 above. In another embodiment, the RDC 304a represents and includes the functionality described above as being provided by the sensor 108. Those skilled in the art will recognize that the RDC 304a may have more or less functionality that described above with reference to FIG. 3 above. The RDC 304a implements RDC functionality as will be described below with reference to FIGS. 11-16 using a processor and memory of the RDC 304a. The RDC 304a is coupled to an antenna for communication with other PDKs 102 and coupled to signal line

1106 to send and receive data and control signals from other devices (not shown). In certain embodiments, signal line 1106 also provides power to the RDC 304a.

[0080] Referring now to FIG. 12, one embodiment a system 1200 of the present invention in which the hybrid device 1102 is part of a cell phone 1202 will be described. The system 1200 comprises a PDK 102b and the cell phone 1202. The cell phone 1202 further comprises cell phone components and a battery 1204 and the hybrid device 1102. As described above with reference to FIG. 11, the hybrid device 1102 includes PDK 102a and RDC 304a coupled for communication with each other via signal line 1104. In this embodiment, the cell phone components and a battery 2004 are coupled to the RDC 304a by signal line 1106. This allows the RDC 304a to use the communication capabilities of the cell phone 1202 including the voice and data channels provided by conventional cell phone to communicate with other networks and devices (not shown). The RDC 304a and the PDK 102a are adapted to communicate wirelessly with other devices, such as the PDK 102b. While FIG. 12 shows the hybrid device 1102 as including both the RDC 304a and the PDK 102a, in another embodiment the hybrid device 1102 includes only the RDC 304a.

[0081] In one embodiment, the cell phone 1202 including the hybrid device 1102 collectively forms a secure cell phone or a generic access point. In such an embodiment, the hybrid device 1102 has a form factor similar to that of a conventional SIM card for cell phones. This is particularly advantageous because the hybrid device 1102 can be used with a variety of existing cell phones without any modification and the hybrid device 1102 is merely inserted in place of a conventional SIM card to provide this functionality. The conventional SIM card is replaced with the hybrid device 1102 that provided the RDC functionality. In other words, the hybrid device 1102 provides authorization control as well as a storage area for storing

information specific to a user. The SIM content (Cell phone account, contact information, and credit card information) that is normally stored in the cell phone 1202 is instead stored in the PDK 102b carried by the user. In one embodiment, the PDK 102b stores the original SIM content in its local memory. For example, the PDK 102b defines a SIM slot 1208 to receive the original SIM card 1206, communicatively couples to the SIM card 1206 and copies the information from the SIM card 1206, effectively giving the original SIM card 1206 a wireless extension.

[0082] Such a configuration is particularly advantageous for a number of reasons. First, the cell phone 1202 is rendered useless (except 911) if the PDK 102b is out of range of the RDC 304a of the hybrid device 1102. Second, the local phone content such as calendar, contacts, etc. is protected because it resides on the PDK 102b, and is secure and not accessible by the cell phone 1202, its hybrid device 1102 or its RDC 304a without the PDK 102b. Third, the RDC function provided by the RDC 304a of the hybrid device 1102 in the cell phone 1202 becomes a generic access point and allows any PDK 102, not just the PDK 102b, to access it. Thus, any user that has an account with a specific service provider may "bond" or "link" their PDK 102 to the cell phone 1202, allowing their account to be charged for any services rendered. Both the bonding process and service access may be performed via the keypad, voice activated, or via bio-functions of the cell phone 1202. Fourth, any PDK 102 may store and provide contract based account information (such as a cell phone account), or may provide credit information (such as a credit or debit card) that is billed for the service. This allows any person that carries a PDK 102 with credit card information store thereon to use their credit card to gain wireless voice and data services without signing a long term contract. Fifth, since the content is carried on the PDK 102, any type of cell phone may be used. The PDK 102 provides active updates to its internal

contents allowing for "last call received" or "last number dialed" to be saved. By bonding the PDK 102 to another phone and hitting redial, the last number that was dialed from any other phone associated with the PDK, is now redialed. There is no need to transfer information from phone to phone or to have back up contact information stored on a personal computer. In an alternate embodiment, the contents (including last number dialed) are stored at the service provider (or in a user defined path – i.e. personal website, etc.) and become available on the cell phone 1202 when the PDK 102 "bonds" to the phone 1202. The referenced account is obtained and the data is transferred to that phone in volatile memory using the network of the service provider to which the cell phone 1202 is coupled. Moreover, the PDK "phone" contents may also be synchronized to a personal computer application via an RDC attached to the personal computer. The phone does not have to be present, only the PDK with a correct password or entry method (bio, etc). The above application/configuration makes cell phones generic allowing any subscriber carrying a PDK 102 with either a cell phone account or credit account to acquire any phone and start using it. Since the user's information stays with the user, it is possible the user could span across multiple cell phone providers in different countries and still maintain a single virtual cell phone account.

[0083] In another embodiment, the hybrid device 1102 contains a copy of the contents of SIM card 1206 information. In this embodiment, the contents that are stored in hybrid device 1102 may only be accessible if PDK102b is within proximity of the Cell Phone 1202. In this embodiment, SIM card 1206 is not required to be present in the PDK 102b.

[0084] In a variation to the embodiment described above with reference to FIG. 12, a second embodiment of the system 1200 does not include the PDK 102b. Instead the functionality described above with reference to the PDK 102b is provided by the PDK 102a that

is part of the hybrid device 1102. The hybrid device 1102 uses the PDK function provided by PDK 102a. The hybrid device 1102 is coupled to the cell phone 1202, in particular the cell phone components and battery 1204, via internal integration or an access port. Such a configuration is particularly advantageous because the PDK function then becomes part of the cell phone 1202 using battery power from the cell phone 1202 and providing the same type of access as described above. Moreover, PDK 102a can provide access control passwords etc. for any type of functions enabled by the phone such as but not limited to gaming, personal computer access, e-commerce, etc. Additionally, the PDK enabled phone uses the back channel to perform other validation / update functions via the cellular infrastructure.

[0085] In a variation to the embodiment described above with reference to FIG. 12, the hybrid device 1102 includes and uses both the RDC 304a and the PDK 102a. This adds the hybrid functionality of being capable of performing both simultaneous RDC and PDK functions to the cell phone 1202. The hybrid functionality extends the type of offerings and functionality by allowing the cell phone 1202 to perform the functionality described above as well as additional functionality described below with reference to FIGS. 13-16.

[0086] Referring now to FIGS. 13-16, the hybrid functionality provided by the hybrid device 1102 will be described in more detail. The hybrid device 1102 allows for many different configurations and operations of the secure PDK/RDC protocol. The hybrid device 1102 allows mixed operations including: RDC/PDK, RDC/RDC or PDK/PDK combinations. For purposes of explanation below, each device is enabled with either or both RDC and PDK functionality.

[0087] FIG. 13 is a block diagram of one embodiment of a system 1300 simultaneously using the PDK and the RDC functionality of the hybrid device 1102 in accordance with the

present invention. FIG. 13 shows the system 1300 comprising a hybrid device 1102 having a first PDK 102a and a first RDC 304a, a second PDK 102b, and a second RDC 304b. In this configuration of the system 1300, the hybrid device 1102 maintains two separate simultaneous links: a first link 1302 between the second PDK 102b and the first RDC 304a of the hybrid device 1102; and a second link 1304 between the first PDK 102a of the hybrid device 1102 and the second RDC 304b. In this system 1300, the second PDK 102b, possibly carried by a user, enables the first RDC 304a of the hybrid device 1102. The hybrid device 1102 in turn with its first PDK 102a enables the second RDC 304b, for example being associated with a third component such as endpoint RDC function.

[0088] In one embodiment, each link 1302, 1304 of the system 1300 provides an independent authorization. In FIG. 13, the hybrid device 1102 provides authorization to the second RDC 304b. The hybrid device 1102 carries credentials (credit card, account information, etc.) that are used to enable a service associated with the second RDC 304b. For example, a cell phone includes the hybrid device 1102 and the hybrid device 1102 stores credit card information. A user makes a purchase using the cell phone as their credit source. The same user also carries the second PDK 102b. The second PDK 102b provides authorization to the hybrid device 1102 to enable specific functionality (charging using of the credit card information) provided by the hybrid device 1102. In other words, the second PDK 102b is used to enable specific features in the hybrid device 1102. The second PDK 102b carries the user's cellular service account information that is used to enable specific cellular services. If the second PDK 102b is no longer present, those services are disabled. Each the authorizations, credit card and cell service, is independent of the other.

[0089] In another embodiment, the links 1302, 1304 of the system 1300 provide a daisy chained authorization. In FIG. 13, the second PDK 102b authorizes the hybrid device 1102 which in turn authorizes the second RDC 304b. It is mandatory for the second PDK 102b to have a connection to the hybrid device 1102 before the hybrid device 1102 can initiate a request for authorization from the second RDC device 304b. For example, a parent could give a child conditional charging privileges where the child may only charge if the parent is present. The child carries the hybrid device 1102 (possibly in a cell phone), and chooses to make a purchase in a local video store. That store has a specific account for the child that is linked to his/her PDK 102a of the hybrid device 1102. When the child walks up to the counter to make the purchase, he/she is identified by their personal ID (included on PDK 102a of the hybrid device 1102 and transmitted to the RDC 304b) and their account is opened. Since the parent is in the same vicinity, the hybrid device 1102 communicates with the parents PDK 120b and obtains authorization to charge to the parent's account. If the parent was not present, the child would still be identified, but would not have charging privileges. In an alternate embodiment, the RDC 304a of the hybrid device 1102 allows different PDKs with different credentials to "bond" with it (i.e. Fathers, Mothers, guardian, adult sibling, etc.), any one of which could be used for authorization.

[0090] Referring now to FIG. 14, one embodiment of a system 1400 using the multiple links to the hybrid device 1102 to generate an authorization signal in accordance with the present invention will be described. More specifically, only when the hybrid device 1102 has multiple links 1402, 1404 will the hybrid device 1102 generate an authorization or enable signal on signal line 1406. In this embodiment, the hybrid device 1102 has a physical output or connection for providing the authorization signal. Any variety of different types of devices may be coupled to

signal line 1406 to receive the authorization or enabling signal. Without receipt of such a signal, the associated devices (not shown) are not operable. As illustrated in FIG. 14, the hybrid device 1102 requires authorization from both the second RDC 304b and the second PDK 102b to enable functionality. As an example, the hybrid device 1102 is coupled to and secures a personal computer (not shown). For the personal computer to operate, it must authenticate with a specific RDC 304b or fixed equipment at a specific physical location. A user carrying a PDK 102b with the correct privileges must also be present to gain access to the computer. If either the RDC 304b or PDK 102b is not present, the hybrid device 1102 does not allow operation of the personal computer. This prevents theft and illegal use of the property.

[0091] Referring now to FIG. 15, one embodiment of a system 1500 that uses multiple PDK links 1502, 1504 to the hybrid device 1102 to generate an authorization signal is shown. For the system 1500, only when multiple PDK links 1502, 1504 to the hybrid device 1102 exist, will an authorization/enablement signal be generated on signal line 1506. Again, in this embodiment, the hybrid device 1102 has a physical output or connection for providing the authorization signal. The system 1500 comprises the hybrid device 1102 and a plurality of PDKs 102a-102 n. Although only two PDKs are shown in FIG. 15, those skilled in the art will recognize that the system 1500 may be configured to include any number of PDKs greater than two. As shown in FIG. 15, the hybrid device 1102 requires authorization (e.g., that a link be established) from multiple PDKs 102b, 102n in order to enable functionality. As an example, the hybrid device 1102 is coupled to control an electronic lock for a safety deposit box. The office manager and the customer each with respective PDKs 102b, 102n need to be present before the hybrid device 1102 generates an enable signal on signal line 1506 to unlock the safety deposit box and allow access to it.

[0092] Referring now to FIG. 16, one embodiment of a system 1600 using the hybrid device 1102b for authorization inheritance is shown. One particular advantage of using hybrid devices 102 is that they provide a mechanism for authorization inheritance within the system 1600. Authorization inheritance is when a first device passes selected information to a second device and the second device then "inherits" that information for use. The use of the information can be a one-time use during the presence of the first device, multiple uses with or without the presence of the first device or permanent use. Furthermore, there are multiple types of inheritance including service inheritance, feature inheritance and personality inheritance. Service inheritance is authorization of the second device for any functionality provided by a given service. Feature inheritance is similar to service inheritance but for a limited set of features offered by a given service. Personality inheritance is where the preferences of a user or holder of a first device are shared with a user or holder of a second device.

[0093] These inheritance concepts and the operation of the hybrid device 1102b will now be described in the specific context of system 1600 shown in FIG. 16 as including a PDK 102b operating as the first device, the hybrid device 1102b operating as the second device and the RDC 304b operating as the third device. The system 1600 illustrates a hybrid device 1102b with simultaneous PDK and RDC functionality to provide inheritance. In this context, the inheritance promulgates the authorization or features from the first device to the second device and onto the third device. However, those skilled in art will recognize that in another embodiment, the first and second devices both communicate directly with the third device to perform the same function. For example, the PDK 102b and the hybrid device 1102b both directly communicate to the RDC 304b and both provide permissions to allow the RDC 304b to generate an authorization or access (without the PDK 102b going through the hybrid device 1102b).

[0094] As shown in FIG. 16, the PDK 102b is similar to the PDK 102 described above with reference to FIG.2 and includes like components and has similar functionality. The PDK 102b also includes service inheritance storage 1602, feature inheritance storage 1604 and personality inheritance storage 1606. The service inheritance storage 1602, feature inheritance storage 1604 and personality inheritance storage 1606 are used to store information that is provided from the PDK 102b, the first device, and inherited by the second device, the hybrid device 1102b. The PDK 102b is carried by a first user and the PDK 102b has multiple accounts on this first device. For example, the service inheritance information stored in service inheritance storage 1602 includes a first credit card account, a first cell phone account, Wi-Fi access information, and computer A access information. The feature inheritance storage 1604 and personality inheritance storage 1606 are used to store information used for feature and personality inheritance as will be described below. Those skilled in the art will recognize that in another embodiment, the service inheritance storage 1602, the feature inheritance storage 1604 and the personality inheritance storage 1606 is a shared or unified memory space with the service inheritance storage 1602, the feature inheritance storage 1604 and the personality inheritance storage 1606 each being a set of references or pointers to the information in the shared or unified memory space. Those skilled the art will recognize that working memory of the PDK 102b may be used for storing the inheritance information, and that in another embodiment, the PDK 102b need not have service inheritance storage 1602, feature inheritance storage 1604 and personality inheritance storage 1606, but may have only one or two of them.

[0095] The hybrid device 1102b is similar to the hybrid device 1102 described above with reference to FIG. 11 and includes like components and has similar functionality. The hybrid device 1102b also includes service inheritance storage 1612, feature inheritance storage

1614 and personality inheritance storage 1616. The hybrid device 1102b is communicatively coupled to the service inheritance storage 1612, feature inheritance storage 1614 and personality inheritance storage 1616. The service inheritance storage 1612, feature inheritance storage 1614 and personality inheritance storage 1616 are also used to store inheritance information specific to the user of the hybrid device 1102b. The service inheritance storage 1612, feature inheritance storage 1614 and personality inheritance storage 1616 are used to store inheritance information received from PDKs, e.g., the PDK 102b. In one embodiment, the hybrid device 1102b is carried by a second user that has a different set of accounts than the user of the first device. For example, the service inheritance information stored in the service inheritance storage 1612 includes a second credit card account, a second cell account, no Wi-Fi access information, and computer B access information. Again, the service inheritance storage 1612, feature inheritance storage 1614 and personality inheritance storage 1616 are portions of working memory of the hybrid device 1102b and the hybrid device 1102b need not have service inheritance storage 1612, feature inheritance storage 1614 and personality inheritance storage 1616, but may have only one or two of them.

[0096] In yet another embodiment, the RDC rather than the hybrid device 1102b collects and uses inherited information. For example, in a configuration where there are 2 PDKs, a first PDK and a second PDK, the first PDK links and communicates with an RDC. The first PDK then signals the RDC that inherited information is available from the second PDK. The RDC establish a link with the second PDK and gets the inherited information from the second PDK. This is particularly advantageous because it avoids having to send the inherited data through the hybrid PDK 1102b as shown in FIG. 16. It also allows inheritance to be performed without a hybrid PDK 1102.

[0097] The RDC 304b operates as the third device and is used to access or enable a Wi-Fi Service. In this embodiment, the RDC 304b receives inheritance information and uses it to enable or disable the services associate with the RDC 304b. While the RDC 304b does not store the inheritance information, in another embodiment it includes service inheritance storage, feature inheritance storage and personality inheritance storage for doing so.

[0098] An example method of using the system 1600 will now be described. Both a first user and a second user are at an airport. A Wi-Fi service is offered in the airport and has RDC 304b controlling access and use of the Wi-Fi service. The first user has and is in possession of the PDK 102b, and the second user has and is in possession of the hybrid device 1102b. The second user with the hybrid device 1102b wants to obtain Wi-Fi access to check email, but the second user doesn't have a Wi-Fi Access account. The first user having the PDK 102b allows the second user to inherit the Wi-Fi access for a one time use. The PDK 102b provides this information to the RDC 304a of the hybrid device 1102b and the hybrid device 1102b stores the inherited information in its service inheritance storage 1612 for use as represented by line 1650. The hybrid device 1102b then communicates with the RDC 304b to access the Wi-Fi service using the first user's account as represented by line 1652. The hybrid device 1102b is able to access and receive the service using the first user's account which it inherited. Depending on the terms with which the information was inherited, the inherited information allows any number of accesses, access for a predetermined amount of time (e.g., for 30 minutes), a single access, or access up to a particular dollar amount of charges.

[0099] In another embodiment, the inheritance information is transferred prior to the service being available. For example, the first user is a parent with a debit card account that is associated with or stored in PDK 102b. A child or minor of the parent is associated or in

possession of the hybrid device 1102b. The system 1600 allows the first user to transfer to their child, a specific dollar amount that the child could spend. In one embodiment, the money is transferred from PDK 102b to the hybrid device 1102b by transferring account information, a dollar amount and spending restrictions from the service inheritance storage 1602 of PDK 102b to the service inheritance storage 1612 of the hybrid device 1102b. In another embodiment, the actual transfer is done via a backend server (not shown) where the child's device 102b and the hybrid device 1102b are only referenced and the backend server actually carries the charge type and amount available. In yet another embodiment, attributes stored in the hybrid device 1102b and the backend server can be combined to determine the amount and charge types allowed.

[00100] The system 1600 is also used to provide feature inheritance. Feature inheritance is similar to service inheritance except feature inheritance is limited to a portion of a service. An example of feature inheritance is where a parent, the first user having the PDK 102b, allows a child, the second user, to play a teen video game or access a specific website while the parent is present. The child is in possession of the hybrid device 1102b, and when in proximity, it enables the computer that has the RDC 304 controlling its use and access to the internet. When the parent is in the room or within proximity of the child, the hybrid device 1102b then acquires permission from the PDK 102b and is then able to pass additional attributes to the RDC 304 of the personal computer or video game that allow a different rating to be in place. When the parent and the PDK 102b leave the room, the child's hybrid device 1102b loses the privileges and the child must return to lower rated games and sites. Those skilled in the art will recognize how the system 1600 may be integrated as part of a DVD player to control what movies may be viewed. If a movie or other video has selective portions of content that are associated with different ratings, the portions of video content that are output depend on a PDK 102 and a hybrid

device 1102b and their associated authorizations. This would allow a single DVD and DVD player to present one version of a movie to an adult viewer while providing a different version of a movie to a child. More specifically, violent or mature content would be removed from the version of the movie output by the DVD system when only the child's hybrid device 1102b is present.

[00101] The system 1600 is also used to provide personality inheritance. Personality inheritance is where the preferences of a user or holder of a first device are shared with a user or holder of a second device which are then be used to make informed decisions or provide guidance to the second device. For example, assume 2 children who are friends like to play video games. Let's assume that each child is associated with a hybrid device 1102b that accumulates information related to the purchases, rentals, and play of these games (i.e. the game may have an RDC as well). Around Christmas, the 2 friends choose to exchange game related personality information -- hybrid device 1102 to hybrid device 1102. Now each friend knows what the other one has played, they type of games they like to play, and if a particular game was rented, purchased, played online, etc. Each friend can now go and purchase, using the information in their hybrid device 1102, a game that they want to give to the other friend for Christmas. In a second example, a work colleague has collected information on the internet related to a specific subject and wants to now share that information with a second colleague. Personality Inheritance can be done via accumulation in the hybrid device 1102, the PDK 102 or via a backend server or both.

[00102] The hybrid device 1102b is also particularly advantages for automatically disabling a service or feature. The concept of "service and/or feature disability" is to remove a capability when a device is within proximity of a zone. There are conditions where it is highly

desirable to disable a function in a portable device. An example is cell phones in movie theatres, or phone cameras in an office building, etc. In these settings, it is possible that the present invention disables or changes the personality or feature set of a device based on the presence of the RDC 304. For example, in a theatre having an associated RDC, any phone that includes the hybrid device 1102 is placed into a vibrate mode, silent mode, or disabled. When the person leaves the theatre, the phone would return to its normal operation. Of course, the user may still need to have their PDK 102 to obtain service, but both of these features can work in conjunction with the other feature. In another example, when an outside vendor attends a meeting for a corporation, his/her cell phone camera is disabled and possibly his/her phone volume is lowered. There are features that can be controlled by the PDK 102, RDC 304 or the hybrid device 1102 located in a corporate office environment. In addition to the switching (or inhibiting) of features when visiting a facility, these same types of attributes can change when any PDK 102, RDC 304 or hybrid device 1102 comes in to proximity of any other PDK 102, RDC 304 or hybrid device 1102. The above examples described how the functionality of a portable device changes depending upon the devices in its vicinity. In addition, the operational state of the fixed (or semi-portable) type of devices could change as well. For example, the parents are watching an R-rated movie and a pre-teen child walks in the room. The movie becomes immediately blocked (or paused) by the display device so that the pre-teen is protected against the content. In another example, an employee of a recreational facility carries an ID badge including a PDK 102. The recreational facility provides areas for access by customers only, not for employees during predefined hours. When an employee gets close to the entrance, their PDK 102 is recognized by the RDC controlling the door locks, and the employee is not permitted into the area.

[00103] Finally, the hybrid device 1102 has been described above as being capable of propagating information between the PDK 102 and the RDC 304. Those skilled in the art will recognize that in environments where there are a plurality of hybrid devices 1102, there are any number of communication paths that can be established between the plurality of hybrid devices 1102 by effectively creating a "daisy chain" of PDKs 102 an RDCs 304 to propagate information from one hybrid device 1102 to another. Such a network of hybrid devices 1102 provides the capability for complex decisions and/or capabilities. There can be any number of information and control transfers between devices having an associated hybrid device 102 such as but not limited to portable to portable, portable to fixed, fixed to fixed, and backend equipment. In such an environment, any device with an associated hybrid device 1102 is able to allow, remove, or alter, the features and capabilities of any other device having an associated hybrid device 102 given the proper authority.

[00104] Various other modifications, changes and variations which will be apparent to those skilled in the art may be made in the arrangement, operation and details of the method and apparatus of the present invention disclosed herein without departing from the spirit and scope of the invention as defined in the appended claims. Therefore, the scope of the invention should be determined by the appended claims and their legal equivalent.

CLAIMS

1. A hybrid device comprising:

an integrated, secure memory storing local, secured information; and

an integrated reader-decoder circuit (RDC) for communicating wirelessly with at least one external device within a proximity zone, the integrated RDC communicatively coupled to the integrated, secure memory for communication with the integrated, secure memory,

wherein one or more of (a) the integrated RDC communicating wirelessly with the at least one external device within the proximity zone and (b) the local, secured information stored by the integrated, secure memory enables one or more of an application, a function, and a service.

2. The hybrid device of claim 1, wherein at least one of the one or more of the application, the function, and the service is enabled, at least in part, on the hybrid device.

3. The hybrid device of claim 1, wherein at least one of the one or more of the application, the function, and the service is enabled, at least in part, external to the hybrid device using an external RDC, the hybrid device communicatively coupled to wirelessly communicate with the external RDC.

4. The hybrid device of claim 1, wherein the local, secured information includes biometric information for authenticating a user.

5. The hybrid device of claim 1, wherein the local, secured information includes biometric information based on a biometric scan of a finger, the biometric information for authenticating a user.

6. The hybrid device of claim 1, wherein the local, secure information includes financial information and at least one of the one or more of the application, the function, and the service enabled completes a financial transaction based on the financial information.

7. The hybrid device of claim 1, wherein the local, secure information includes financial information and at least one of the one or more of the application, the function, and the service enabled completes a financial transaction based on a signal received from the at least one external device by the integrated RDC.

8. The hybrid device of claim 1, wherein the local, secure information includes financial information and at least one of the one or more of the application, the function, and the service enabled completes a financial transaction based on an authorization of the financial information using an external database, the financial information transmitted to the external authentication database.

9. The hybrid device of claim 8, wherein the external authentication database is separate from a merchant providing a sale in the financial transaction.

10. The hybrid device of claim 1, wherein the one or more of the application, the function and the service enabled based on the local, secured information stored by the integrated, secure memory includes a first application, function or service based on a first subsets of local, secured information stored by the integrated, secure memory and a second application, function or service based on a second subset of local, secured information, the first and second subset of local, secured information having different accessibility.

11. The hybrid device of claim 1, wherein the hybrid device is a cell phone.

12. The hybrid device of claim 1, wherein the at least one device is included in jewelry.

13. The hybrid device of claim 1, wherein the at least one device is a watch.

14. A method comprising:

creating a first wireless link between an integrated receiver-decoder circuit (RDC) of a hybrid device and an external device, the hybrid device including an integrated, secure memory and the integrated RDC, wherein the integrated, secure memory stores local, secured information;

receiving a first signal, at the integrated RDC, via the first wireless link, from the external device;

generating an enablement signal enabling one or more of an application, a function and a service.

15. The method of claim 14, wherein at least one of the one or more of the application, the function, and the service is enabled at least in part on the hybrid device.

16. The method of claim 14 further comprising:

sending the enablement signal, wherein at least one of the one or more of the application, the function, and the service is enabled at least in part on a device external to the hybrid device and communicatively coupled to an external RDC.

17. The method of claim 14, wherein the local, secured information includes biometric information for authenticating a user.

18. The method of claim 14, wherein the local, secured information includes financial information and wherein the one or more of the application, the function and the service completes a financial transaction.

19. The method of claim 14, wherein the hybrid device is a cell phone.

20. The method of claim 14, wherein the external PDK is included in a watch.

ABSTRACT

A hybrid device includes a personal digital key (PDK) and a receiver-decoder circuit (RDC). The PDK and RDC of the hybrid device are coupled for communication with each other. In one embodiment, the hybrid device also provides a physical interconnect for connecting to other devices to send and receive control signals and data, and receive power. The hybrid device operates in one of several modes including, PDK only, RDC only, or PDK and RDC. This allows a variety of system configurations for mixed operation including: PDK/RDC, RDC/RDC or PDK/PDK. The present invention also includes a number of system configurations for use of the hybrid device including: use of the hybrid device in a cell phone; simultaneous use of the PDK and the RDC functionality of hybrid device; use of multiple links of hybrid device to generate an authorization signal, use of multiple PDK links to the hybrid device to generate an authorization signal; and use of the hybrid device for authorization inheritance.

PTO/AIA/02 (07-13)
Approved for use through 01/31/2014. OMB 0651-0032
U.S. Patent and Trademark Office; U.S. DEPARTMENT OF COMMERCE
Under the Paperwork Reduction Act of 1995, no persons are required to respond to a collection of information unless it displays a valid OMB control number.

SUBSTITUTE STATEMENT IN LIEU OF AN OATH OR DECLARATION FOR UTILITY OR DESIGN PATENT APPLICATION (35 U.S.C. 115(d) AND 37 CFR 1.64)

Title of Invention	Hybrid Device Having a Personal Digital Key and Receiver-Decoder Circuit and Methods of Use

This statement is directed to:

☐ The attached application,

OR

☒ United States application or PCT international application number 14/171,705 filed on February 3, 2014.

LEGAL NAME of inventor to whom this substitute statement applies:

(*E.g.*, Given Name (first and middle (if any)) and Family Name or Surname)

David L. Brown

Residence (except for a deceased or legally incapacitated inventor):

City	State	Country
Jupiter	FL	US

Mailing Address (except for a deceased or legally incapacitated inventor):

17708 127th Dr. North

City	State	Zip	Country
Jupiter	FL	33478	US

I believe the above-named inventor or joint inventor to be the original inventor or an original joint inventor of a claimed invention in the application.

The above-identified application was made or authorized to be made by me.

I hereby acknowledge that any willful false statement made in this statement is punishable under 18 U.S.C. 1001 by fine or imprisonment of not more than five (5) years, or both.

Relationship to the inventor to whom this substitute statement applies:

- ☐ Legal Representative (for deceased or legally incapacitated inventor only),
- ☒ Assignee,
- ☐ Person to whom the inventor is under an obligation to assign,
- ☐ Person who otherwise shows a sufficient proprietary interest in the matter (petition under 37 CFR 1.46 is required), or
- ☐ Joint Inventor.

This collection of information is required by 35 U.S.C. 115 and 37 CFR 1.63. The information is required to obtain or retain a benefit by the public which is to file (and by the USPTO to process) an application. Confidentiality is governed by 35 U.S.C. 122 and 37 CFR 1.11 and 1.14. This collection is estimated to take 1 minute to complete, including gathering, preparing, and submitting the completed application form to the USPTO. Time will vary depending upon the individual case. Any comments on the amount of time you require to complete this form and/or suggestions for reducing this burden, should be sent to the Chief Information Officer, U.S. Patent and Trademark Office, U.S. Department of Commerce, P.O. Box 1450, Alexandria, VA 22313-1450. DO NOT SEND FEES OR COMPLETED FORMS TO THIS ADDRESS. **SEND TO: Commissioner for Patents, P.O. Box 1450, Alexandria, VA 22313-1450.**

If you need assistance in completing the form, call 1-800-PTO-9199 and select option 2.

PTO/SB/AIA02 (07-13)
Approved for use through 01/31/2014. OMB 0651-0032
U.S. Patent and Trademark Office; U.S. DEPARTMENT OF COMMERCE
Under the Paperwork Reduction Act of 1995, no persons are required to respond to a collection of information unless it displays a valid OMB control number.

SUBSTITUTE STATEMENT

Circumstances permitting execution of this substitute statement:

- [ ] Inventor is deceased.
- [ ] Inventor is under legal incapacity.
- [x] Inventor cannot be found or reached after diligent effort, or
- [ ] Inventor has refused to execute the oath or declaration under 37 CFR 1.63.

If there are joint inventors, please check the appropriate box below:

- [x] An application data sheet under 37 CFR 1.76 (PTO/AIA/14 or equivalent) naming the entire inventive entity has been or is currently submitted.

OR

- [ ] An application data sheet under 37 CFR 1.76 (PTO/AIA/14 or equivalent) has not been submitted. Thus, a Substitute Statement Supplemental Sheet (PTO/AIA/11 or equivalent) naming the entire inventive entity and providing inventor information is attached. See 37 CFR 1.64(b).

WARNING:

Petitioner/applicant is cautioned to avoid submitting personal information in documents filed in a patent application that may contribute to identity theft. Personal information such as social security numbers, bank account numbers, or credit card numbers (other than a check or credit card authorization form PTO-2038 submitted for payment purposes) is never required by the USPTO to support a petition or an application. If this type of personal information is included in documents submitted to the USPTO, petitioners/applicants should consider redacting such personal information from the documents before submitting them to the USPTO. Petitioner/applicant is advised that the record of a patent application is available to the public after publication of the application (unless a non-publication request in compliance with 37 CFR 1.213(a) is made in the application) or issuance of a patent. Furthermore, the record from an abandoned application may also be available to the public if the application is referenced in a published application or an issued patent (see 37 CFR 1.14). Checks and credit card authorization forms PTO-2038 submitted for payment purposes are not retained in the application file and therefore are not publicly available.

PERSON EXECUTING THIS SUBSTITUTE STATEMENT:

Name: John J. Giobbi | Date (Optional):

Signature:

APPLICANT NAME AND TITLE OF PERSON EXECUTING THIS SUBSTITUTE STATEMENT:

If the applicant is a juristic entity, list the applicant name and the title of the signer:

Applicant Name: Proxense, LLC

Title of Person Executing This Substitute Statement: Chief Executive Officer

The signer, whose title is supplied above, is authorized to act on behalf of the applicant.

Residence of the signer (unless provided in an application data sheet, PTO/AIA/14 or equivalent):

City Bend | State OR | Country US

Mailing Address of the signer (unless provided in an application data sheet, PTO/AIA/14 or equivalent)

689 NW Stonepine Drive

City Bend | State OR | Zip 97701 | Country US

Note: Use an additional PTO/AIA/02 form for each inventor who is deceased, legally incapacitated, cannot be found or reached after diligent effort, or has refused to execute the oath or declaration under 37 CFR 1.63.

Privacy Act Statement

The **Privacy Act of 1974 (P.L. 93-579)** requires that you be given certain information in connection with your submission of the attached form related to a patent application or patent. Accordingly, pursuant to the requirements of the Act, please be advised that: (1) the general authority for the collection of this information is 35 U.S.C. 2(b)(2); (2) furnishing of the information solicited is voluntary; and (3) the principal purpose for which the information is used by the U.S. Patent and Trademark Office is to process and/or examine your submission related to a patent application or patent. If you do not furnish the requested information, the U.S. Patent and Trademark Office may not be able to process and/or examine your submission, which may result in termination of proceedings or abandonment of the application or expiration of the patent.

The information provided by you in this form will be subject to the following routine uses:

1. The information on this form will be treated confidentially to the extent allowed under the Freedom of Information Act (5 U.S.C. 552) and the Privacy Act (5 U.S.C 552a). Records from this system of records may be disclosed to the Department of Justice to determine whether disclosure of these records is required by the Freedom of Information Act.
2. A record from this system of records may be disclosed, as a routine use, in the course of presenting evidence to a court, magistrate, or administrative tribunal, including disclosures to opposing counsel in the course of settlement negotiations.
3. A record in this system of records may be disclosed, as a routine use, to a Member of Congress submitting a request involving an individual, to whom the record pertains, when the individual has requested assistance from the Member with respect to the subject matter of the record.
4. A record in this system of records may be disclosed, as a routine use, to a contractor of the Agency having need for the information in order to perform a contract. Recipients of information shall be required to comply with the requirements of the Privacy Act of 1974, as amended, pursuant to 5 U.S.C. 552a(m).
5. A record related to an International Application filed under the Patent Cooperation Treaty in this system of records may be disclosed, as a routine use, to the International Bureau of the World Intellectual Property Organization, pursuant to the Patent Cooperation Treaty.
6. A record in this system of records may be disclosed, as a routine use, to another federal agency for purposes of National Security review (35 U.S.C. 181) and for review pursuant to the Atomic Energy Act (42 U.S.C. 218(c)).
7. A record from this system of records may be disclosed, as a routine use, to the Administrator, General Services, or his/her designee, during an inspection of records conducted by GSA as part of that agency's responsibility to recommend improvements in records management practices and programs, under authority of 44 U.S.C. 2904 and 2906. Such disclosure shall be made in accordance with the GSA regulations governing inspection of records for this purpose, and any other relevant (*i.e.*, GSA or Commerce) directive. Such disclosure shall not be used to make determinations about individuals.
8. A record from this system of records may be disclosed, as a routine use, to the public after either publication of the application pursuant to 35 U.S.C. 122(b) or issuance of a patent pursuant to 35 U.S.C. 151. Further, a record may be disclosed, subject to the limitations of 37 CFR 1.14, as a routine use, to the public if the record was filed in an application which became abandoned or in which the proceedings were terminated and which application is referenced by either a published application, an application open to public inspection or an issued patent.
9. A record from this system of records may be disclosed, as a routine use, to a Federal, State, or local law enforcement agency, if the USPTO becomes aware of a violation or potential violation of law or regulation.

Electronic Patent Application Fee Transmittal

Application Number:	
Filing Date:	
Title of Invention:	Hybrid Device Having a Personal Digital Key and Receiver-Decoder Circuit and Methods of Use
First Named Inventor/Applicant Name:	David L. Brown
Filer:	Matthew M. Holmes/Esther Kim
Attorney Docket Number:	10001-05305 US

Filed as Small Entity

Filing Fees for Utility under 35 USC 111(a)

Description	Fee Code	Quantity	Amount	Sub-Total in USD($)
Basic Filing:				
Utility filing Fee (Electronic filing)	4011	1	70	70
Utility Search Fee	2111	1	300	300
Utility Examination Fee	2311	1	360	360
Pages:				
Claims:				
Miscellaneous-Filing:				
Petition:				
Patent-Appeals-and-Interference:				

Description	Fee Code	Quantity	Amount	Sub-Total in USD($)
Post-Allowance-and-Post-Issuance:				
Extension-of-Time:				
Miscellaneous:				
		Total in USD ($)		**730**

Electronic Acknowledgement Receipt	
EFS ID:	24286312
Application Number:	14961645
International Application Number:	
Confirmation Number:	4670
Title of Invention:	Hybrid Device Having a Personal Digital Key and Receiver-Decoder Circuit and Methods of Use
First Named Inventor/Applicant Name:	David L. Brown
Customer Number:	89194
Filer:	Matthew M. Holmes
Filer Authorized By:	
Attorney Docket Number:	10001-05305 US
Receipt Date:	07-DEC-2015
Filing Date:	
Time Stamp:	19:05:49
Application Type:	Utility under 35 USC 111(a)

Payment information:

Submitted with Payment	yes
Payment Type	Credit Card
Payment was successfully received in RAM	$730
RAM confirmation Number	5954
Deposit Account	
Authorized User	
The Director of the USPTO is hereby authorized to charge indicated fees and credit any overpayment as follows:	

File Listing:

Document Number	Document Description	File Name	File Size(Bytes)/ Message Digest	Multi Part /.zip	Pages (if appl.)
1	Application Data Sheet	05305US_ADS.pdf	1823002 3eb27422e675e0810d2a3f91107eb56685eef23c	no	9
Warnings:					
Information:					
2	Drawings-only black and white line drawings	05305US_Drawings.pdf	95704 c2385047d160ee2c41670a5244b7ac611820765c	no	15
Warnings:					
Information:					
3		05305US_Specification.pdf	252781 00f9faf528811132f4dd51f97a647cd10e57ad24	yes	47

Multipart Description/PDF files in .zip description

Document Description	Start	End
Specification	1	42
Claims	43	46
Abstract	47	47

Document Number	Document Description	File Name	File Size(Bytes)/ Message Digest	Multi Part /.zip	Pages (if appl.)
Warnings:					
Information:					
4	Oath or Declaration filed	05305US_SubstituteStatement.pdf	601725 0df1c33132cf690d945d34e7729b3efe44616c64	no	3
Warnings:					
Information:					
5	Fee Worksheet (SB06)	fee-info.pdf	34912 c66ae6c0ff38effc9f8d5f36325709e93f4a1ad0	no	2
Warnings:					
Information:					
		Total Files Size (in bytes):	2808124		

This Acknowledgement Receipt evidences receipt on the noted date by the USPTO of the indicated documents, characterized by the applicant, and including page counts, where applicable. It serves as evidence of receipt similar to a Post Card, as described in MPEP 503.

New Applications Under 35 U.S.C. 111
If a new application is being filed and the application includes the necessary components for a filing date (see 37 CFR 1.53(b)-(d) and MPEP 506), a Filing Receipt (37 CFR 1.54) will be issued in due course and the date shown on this Acknowledgement Receipt will establish the filing date of the application.

National Stage of an International Application under 35 U.S.C. 371
If a timely submission to enter the national stage of an international application is compliant with the conditions of 35 U.S.C. 371 and other applicable requirements a Form PCT/DO/EO/903 indicating acceptance of the application as a national stage submission under 35 U.S.C. 371 will be issued in addition to the Filing Receipt, in due course.

New International Application Filed with the USPTO as a Receiving Office
If a new international application is being filed and the international application includes the necessary components for an international filing date (see PCT Article 11 and MPEP 1810), a Notification of the International Application Number and of the International Filing Date (Form PCT/RO/105) will be issued in due course, subject to prescriptions concerning national security, and the date shown on this Acknowledgement Receipt will establish the international filing date of the application.

PATENT APPLICATION FEE DETERMINATION RECORD Substitute for Form PTO-875	Application or Docket Number 14/961,645

APPLICATION AS FILED - PART I

FOR	(Column 1) NUMBER FILED	(Column 2) NUMBER EXTRA	SMALL ENTITY RATE($)	SMALL ENTITY FEE($)	OR	OTHER THAN SMALL ENTITY RATE($)	OTHER THAN SMALL ENTITY FEE($)
BASIC FEE (37 CFR 1.16(a), (b), or (c))	N/A	N/A	N/A	70		N/A	
SEARCH FEE (37 CFR 1.16(k), (i), or (m))	N/A	N/A	N/A	300		N/A	
EXAMINATION FEE (37 CFR 1.16(o), (p), or (q))	N/A	N/A	N/A	360		N/A	
TOTAL CLAIMS (37 CFR 1.16(i))	20 minus 20 =	*	x 40 =	0.00	OR		
INDEPENDENT CLAIMS (37 CFR 1.16(h))	2 minus 3 =	*	x 210 =	0.00			
APPLICATION SIZE FEE (37 CFR 1.16(s))	If the specification and drawings exceed 100 sheets of paper, the application size fee due is $310 ($155 for small entity) for each additional 50 sheets or fraction thereof. See 35 U.S.C. 41(a)(1)(G) and 37 CFR 1.16(s).			0.00			
MULTIPLE DEPENDENT CLAIM PRESENT (37 CFR 1.16(j))				0.00			
* If the difference in column 1 is less than zero, enter "0" in column 2.			TOTAL	730		TOTAL	

APPLICATION AS AMENDED - PART II

		(Column 1) CLAIMS REMAINING AFTER AMENDMENT		(Column 2) HIGHEST NUMBER PREVIOUSLY PAID FOR	(Column 3) PRESENT EXTRA	SMALL ENTITY RATE($)	SMALL ENTITY ADDITIONAL FEE($)	OR	OTHER THAN SMALL ENTITY RATE($)	OTHER THAN SMALL ENTITY ADDITIONAL FEE($)
AMENDMENT A	Total (37 CFR 1.16(i))	*	Minus	**	=	x =		OR	x =	
AMENDMENT A	Independent (37 CFR 1.16(h))	*	Minus	***	=	x =		OR	x =	
AMENDMENT A	Application Size Fee (37 CFR 1.16(s))									
AMENDMENT A	FIRST PRESENTATION OF MULTIPLE DEPENDENT CLAIM (37 CFR 1.16(j))							OR		
						TOTAL ADD'L FEE		OR	TOTAL ADD'L FEE	

		(Column 1) CLAIMS REMAINING AFTER AMENDMENT		(Column 2) HIGHEST NUMBER PREVIOUSLY PAID FOR	(Column 3) PRESENT EXTRA	RATE($)	ADDITIONAL FEE($)	OR	RATE($)	ADDITIONAL FEE($)
AMENDMENT B	Total (37 CFR 1.16(i))	*	Minus	**	=	x =		OR	x =	
AMENDMENT B	Independent (37 CFR 1.16(h))	*	Minus	***	=	x =		OR	x =	
AMENDMENT B	Application Size Fee (37 CFR 1.16(s))									
AMENDMENT B	FIRST PRESENTATION OF MULTIPLE DEPENDENT CLAIM (37 CFR 1.16(j))							OR		
						TOTAL ADD'L FEE		OR	TOTAL ADD'L FEE	

* If the entry in column 1 is less than the entry in column 2, write "0" in column 3.
** If the "Highest Number Previously Paid For" IN THIS SPACE is less than 20, enter "20".
*** If the "Highest Number Previously Paid For" IN THIS SPACE is less than 3, enter "3".
The "Highest Number Previously Paid For" (Total or Independent) is the highest found in the appropriate box in column 1.

UNITED STATES PATENT AND TRADEMARK OFFICE

UNITED STATES DEPARTMENT OF COMMERCE
United States Patent and Trademark Office
Address: COMMISSIONER FOR PATENTS
P.O. Box 1450
Alexandria, Virginia 22313-1450
www.uspto.gov

APPLICATION NUMBER	FILING or 371(c) DATE	GRP ART UNIT	FIL FEE REC'D	ATTY.DOCKET.NO	TOT CLAIMS	IND CLAIMS
14/961,645	12/07/2015	2431	730	10001-05305 US	20	2

CONFIRMATION NO. 4670

FILING RECEIPT

89194
Patent Law Works/Proxense
Greg Sueoka
201 South Main Street, Suite 250
Salt Lake City, UT 84111

OC000000079347367

Date Mailed: 12/29/2015

Receipt is acknowledged of this non-provisional patent application. The application will be taken up for examination in due course. Applicant will be notified as to the results of the examination. Any correspondence concerning the application must include the following identification information: the U.S. APPLICATION NUMBER, FILING DATE, NAME OF APPLICANT, and TITLE OF INVENTION. Fees transmitted by check or draft are subject to collection. Please verify the accuracy of the data presented on this receipt. **If an error is noted on this Filing Receipt, please submit a written request for a Filing Receipt Correction. Please provide a copy of this Filing Receipt with the changes noted thereon. If you received a "Notice to File Missing Parts" for this application, please submit any corrections to this Filing Receipt with your reply to the Notice. When the USPTO processes the reply to the Notice, the USPTO will generate another Filing Receipt incorporating the requested corrections**

Inventor(s)

David L. Brown, Jupiter, FL;

Applicant(s)

Proxense, LLC, Bend, OR;

Power of Attorney: None

Domestic Priority data as claimed by applicant

This application is a CON of 14/677,893 04/02/2015 PAT 9235700
which is a CON of 14/171,705 02/03/2014 PAT 9049188
which is a CON of 13/445,825 04/12/2012 PAT 8646042
which is a CON of 12/329,329 12/05/2008 PAT 8171528
which claims benefit of 60/992,953 12/06/2007

Foreign Applications for which priority is claimed (You may be eligible to benefit from the **Patent Prosecution Highway** program at the USPTO. Please see http://www.uspto.gov for more information.) - None.
Foreign application information must be provided in an Application Data Sheet in order to constitute a claim to foreign priority. See 37 CFR 1.55 and 1.76.

Permission to Access Application via Priority Document Exchange: Yes

Permission to Access Search Results: Yes

Applicant may provide or rescind an authorization for access using Form PTO/SB/39 or Form PTO/SB/69 as appropriate.

If Required, Foreign Filing License Granted: 12/22/2015

The country code and number of your priority application, to be used for filing abroad under the Paris Convention, is **US 14/961,645**

Projected Publication Date: Request for Non-Publication Acknowledged

Non-Publication Request: Yes

Early Publication Request: No
**** SMALL ENTITY ****
Title

Hybrid Device Having a Personal Digital Key and Receiver-Decoder Circuit and Methods of Use

Preliminary Class

726

Statement under 37 CFR 1.55 or 1.78 for AIA (First Inventor to File) Transition Applications: No

PROTECTING YOUR INVENTION OUTSIDE THE UNITED STATES

Since the rights granted by a U.S. patent extend only throughout the territory of the United States and have no effect in a foreign country, an inventor who wishes patent protection in another country must apply for a patent in a specific country or in regional patent offices. Applicants may wish to consider the filing of an international application under the Patent Cooperation Treaty (PCT). An international (PCT) application generally has the same effect as a regular national patent application in each PCT-member country. The PCT process **simplifies** the filing of patent applications on the same invention in member countries, but **does not result** in a grant of "an international patent" and does not eliminate the need of applicants to file additional documents and fees in countries where patent protection is desired.

Almost every country has its own patent law, and a person desiring a patent in a particular country must make an application for patent in that country in accordance with its particular laws. Since the laws of many countries differ in various respects from the patent law of the United States, applicants are advised to seek guidance from specific foreign countries to ensure that patent rights are not lost prematurely.

Applicants also are advised that in the case of inventions made in the United States, the Director of the USPTO must issue a license before applicants can apply for a patent in a foreign country. The filing of a U.S. patent application serves as a request for a foreign filing license. The application's filing receipt contains further information and guidance as to the status of applicant's license for foreign filing.

Applicants may wish to consult the USPTO booklet, "General Information Concerning Patents" (specifically, the section entitled "Treaties and Foreign Patents") for more information on timeframes and deadlines for filing foreign patent applications. The guide is available either by contacting the USPTO Contact Center at 800-786-9199, or it can be viewed on the USPTO website at http://www.uspto.gov/web/offices/pac/doc/general/index.html.

For information on preventing theft of your intellectual property (patents, trademarks and copyrights), you may wish to consult the U.S. Government website, http://www.stopfakes.gov. Part of a Department of Commerce initiative, this website includes self-help "toolkits" giving innovators guidance on how to protect intellectual property in specific countries such as China, Korea and Mexico. For questions regarding patent enforcement issues, applicants may call the U.S. Government hotline at 1-866-999-HALT (1-866-999-4258).

LICENSE FOR FOREIGN FILING UNDER

Title 35, United States Code, Section 184

Title 37, Code of Federal Regulations, 5.11 & 5.15

GRANTED

The applicant has been granted a license under 35 U.S.C. 184, if the phrase "IF REQUIRED, FOREIGN FILING LICENSE GRANTED" followed by a date appears on this form. Such licenses are issued in all applications where the conditions for issuance of a license have been met, regardless of whether or not a license may be required as set forth in 37 CFR 5.15. The scope and limitations of this license are set forth in 37 CFR 5.15(a) unless an earlier license has been issued under 37 CFR 5.15(b). The license is subject to revocation upon written notification. The date indicated is the effective date of the license, unless an earlier license of similar scope has been granted under 37 CFR 5.13 or 5.14.

This license is to be retained by the licensee and may be used at any time on or after the effective date thereof unless it is revoked. This license is automatically transferred to any related applications(s) filed under 37 CFR 1.53(d). This license is not retroactive.

The grant of a license does not in any way lessen the responsibility of a licensee for the security of the subject matter as imposed by any Government contract or the provisions of existing laws relating to espionage and the national security or the export of technical data. Licensees should apprise themselves of current regulations especially with respect to certain countries, of other agencies, particularly the Office of Defense Trade Controls, Department of State (with respect to Arms, Munitions and Implements of War (22 CFR 121-128)); the Bureau of Industry and Security, Department of Commerce (15 CFR parts 730-774); the Office of Foreign AssetsControl, Department of Treasury (31 CFR Parts 500+) and the Department of Energy.

NOT GRANTED

No license under 35 U.S.C. 184 has been granted at this time, if the phrase "IF REQUIRED, FOREIGN FILING LICENSE GRANTED" DOES NOT appear on this form. Applicant may still petition for a license under 37 CFR 5.12, if a license is desired before the expiration of 6 months from the filing date of the application. If 6 months has lapsed from the filing date of this application and the licensee has not received any indication of a secrecy order under 35 U.S.C. 181, the licensee may foreign file the application pursuant to 37 CFR 5.15(b).

SelectUSA

The United States represents the largest, most dynamic marketplace in the world and is an unparalleled location for business investment, innovation, and commercialization of new technologies. The U.S. offers tremendous resources and advantages for those who invest and manufacture goods here. Through SelectUSA, our nation works to promote and facilitate business investment. SelectUSA provides information assistance to the international investor community; serves as an ombudsman for existing and potential investors; advocates on behalf of U.S. cities, states, and regions competing for global investment; and counsels U.S. economic development organizations on investment attraction best practices. To learn more about why the United States is the best country in the world to develop technology, manufacture products, deliver services, and grow your business, visit http://www.SelectUSA.gov or call +1-202-482-6800.

Doc Code: PA..
Document Description: Power of Attorney

PTO/AIA/82A (07-13)
Approved for use through 11/30/2014. OMB 0651-0051
U.S. Patent and Trademark Office; U.S. DEPARTMENT OF COMMERCE
Under the Paperwork Reduction Act of 1995, no persons are required to respond to a collection of information unless it displays a valid OMB control number.

TRANSMITTAL FOR POWER OF ATTORNEY TO ONE OR MORE REGISTERED PRACTITIONERS

NOTE: This form is to be submitted with the Power of Attorney by Applicant form (PTO/AIA/82B) to identify the application to which the Power of Attorney is directed, in accordance with 37 CFR 1.5, unless the application number and filing date are identified in the Power of Attorney by Applicant form. If neither form PTO/AIA/82A nor form PTO/AIA82B identifies the application to which the Power of Attorney is directed, the Power of Attorney will not be recognized in the application.

Application Number	14/961,645
Filing Date	December 7, 2015
First Named Inventor	David L. Brown
Title	Hybrid Device Having a Personal Digital Key and Receiver-Decoder Circuit and Methods of Use
Art Unit	2431
Examiner Name	Not Yet Assigned
Attorney Docket Number	Not Yet Assigned

SIGNATURE of Applicant or Patent Practitioner

Signature	/Paige Alsbury/	Date (Optional)	February 16, 2016
Name	Paige M. Alsbury	Registration Number	72,965
Title (if Applicant is a juristic entity)	Attorney of Record		
Applicant Name (if Applicant is a juristic entity)	Proxense, LLC		

NOTE: This form must be signed in accordance with 37 CFR 1.33. See 37 CFR 1.4(d) for signature requirements and certifications. If more than one applicant, use multiple forms.

☑ *Total of 1 forms are submitted.

This collection of information is required by 37 CFR 1.131, 1.32, and 1.33. The information is required to obtain or retain a benefit by the public which is to file (and by the USPTO to process) an application. Confidentiality is governed by 35 U.S.C. 122 and 37 CFR 1.11 and 1.14. This collection is estimated to take 3 minutes to complete, including gathering, preparing, and submitting the completed application form to the USPTO. Time will vary depending upon the individual case. Any comments on the amount of time you require to complete this form and/or suggestions for reducing this burden, should be sent to the Chief Information Officer, U.S. Patent and Trademark Office, U.S. Department of Commerce, P.O. Box 1450, Alexandria, VA 22313-1450. DO NOT SEND FEES OR COMPLETED FORMS TO THIS ADDRESS. **SEND TO: Commissioner for Patents, P.O. Box 1450, Alexandria, VA 22313-1450.**

If you need assistance in completing the form, call 1-800-PTO-9199 and select option 2.

Doc Code: PA..
Document Description: Power of Attorney

PTO/AIA/82B (07-13)
Approved for use through 11/30/2014. OMB 0651-0051
U.S. Patent and Trademark Office; U.S. DEPARTMENT OF COMMERCE
Under the Paperwork Reduction Act of 1995, no persons are required to respond to a collection of information unless it displays a valid OMB control number

POWER OF ATTORNEY BY APPLICANT

I hereby revoke all previous powers of attorney given in the application identified in either the attached transmittal letter or the boxes below.

Application Number	Filing Date

(Note: The boxes above may be left blank if information is provided on form PTO/AIA/82A.)

☑ I hereby appoint the Patent Practitioner(s) associated with the following Customer Number as my/our attorney(s) or agent(s), and to transact all business in the United States Patent and Trademark Office connected therewith for the application referenced in the attached transmittal letter (form PTO/AIA/82A) or identified above: 89194

OR

☐ I hereby appoint Practitioner(s) named in the attached list (form PTO/AIA/82C) as my/our attorney(s) or agent(s), and to transact all business in the United States Patent and Trademark Office connected therewith for the patent application referenced in the attached transmittal letter (form PTO/AIA/82A) or identified above. (Note: Complete form PTO/AIA/82C.)

Please recognize or change the correspondence address for the application identified in the attached transmittal letter or the boxes above to:

☑ The address associated with the above-mentioned Customer Number

OR

☐ The address associated with Customer Number:

OR

Firm or Individual Name					
Address					
City		State		Zip	
Country					
Telephone		Email			

I am the Applicant (if the Applicant is a juristic entity, list the Applicant name in the box):

Proxense, LLC

☐ Inventor or Joint Inventor (title not required below)

☐ Legal Representative of a Deceased or Legally Incapacitated Inventor (title not required below)

☑ Assignee or Person to Whom the Inventor is Under an Obligation to Assign (provide signer's title if applicant is a juristic entity)

☐ Person Who Otherwise Shows Sufficient Proprietary Interest (e.g., a petition under 37 CFR 1.46(b)(2) was granted in the application or is concurrently being filed with this document) (provide signer's title if applicant is a juristic entity)

SIGNATURE of Applicant for Patent

The undersigned (whose title is supplied below) is authorized to act on behalf of the applicant (e.g., where the applicant is a juristic entity).

Signature		Date (Optional)	
Name	John J. Giobbi		
Title	Chief Executive Officer		

NOTE: Signature - This form must be signed by the applicant in accordance with 37 CFR 1.33. See 37 CFR 1.4 for signature requirements and certifications. If more than one applicant, use multiple forms.

☑ Total of 1 forms are submitted.

This collection of information is required by 37 CFR 1.131, 1.32, and 1.33. The information is required to obtain or retain a benefit by the public which is to file (and by the USPTO to process) an application. Confidentiality is governed by 35 U.S.C. 122 and 37 CFR 1.11 and 1.14. This collection is estimated to take 3 minutes to complete, including gathering, preparing, and submitting the completed application form to the USPTO. Time will vary depending upon the individual case. Any comments on the amount of time you require to complete this form and/or suggestions for reducing this burden, should be sent to the Chief Information Officer, U.S. Patent and Trademark Office, U.S. Department of Commerce, P.O. Box 1450, Alexandria, VA 22313-1450. DO NOT SEND FEES OR COMPLETED FORMS TO THIS ADDRESS. **SEND TO: Commissioner for Patents, P.O. Box 1450, Alexandria, VA 22313-1450.**

If you need assistance in completing the form, call 1-800-PTO-9199 and select option 2.

Privacy Act Statement

The **Privacy Act of 1974 (P.L. 93-579)** requires that you be given certain information in connection with your submission of the attached form related to a patent application or patent. Accordingly, pursuant to the requirements of the Act, please be advised that: (1) the general authority for the collection of this information is 35 U.S.C. 2(b)(2); (2) furnishing of the information solicited is voluntary; and (3) the principal purpose for which the information is used by the U.S. Patent and Trademark Office is to process and/or examine your submission related to a patent application or patent. If you do not furnish the requested information, the U.S. Patent and Trademark Office may not be able to process and/or examine your submission, which may result in termination of proceedings or abandonment of the application or expiration of the patent.

The information provided by you in this form will be subject to the following routine uses:

1. The information on this form will be treated confidentially to the extent allowed under the Freedom of Information Act (5 U.S.C. 552) and the Privacy Act (5 U.S.C. 552a). Records from this system of records may be disclosed to the Department of Justice to determine whether the Freedom of Information Act requires disclosure of these records.
2. A record from this system of records may be disclosed, as a routine use, in the course of presenting evidence to a court, magistrate, or administrative tribunal, including disclosures to opposing counsel in the course of settlement negotiations.
3. A record in this system of records may be disclosed, as a routine use, to a Member of Congress submitting a request involving an individual, to whom the record pertains, when the individual has requested assistance from the Member with respect to the subject matter of the record.
4. A record in this system of records may be disclosed, as a routine use, to a contractor of the Agency having need for the information in order to perform a contract. Recipients of information shall be required to comply with the requirements of the Privacy Act of 1974, as amended, pursuant to 5 U.S.C. 552a(m).
5. A record related to an International Application filed under the Patent Cooperation Treaty in this system of records may be disclosed, as a routine use, to the International Bureau of the World Intellectual Property Organization, pursuant to the Patent Cooperation Treaty.
6. A record in this system of records may be disclosed, as a routine use, to another federal agency for purposes of National Security review (35 U.S.C. 181) and for review pursuant to the Atomic Energy Act (42 U.S.C. 218(c)).
7. A record from this system of records may be disclosed, as a routine use, to the Administrator, General Services, or his/her designee, during an inspection of records conducted by GSA as part of that agency's responsibility to recommend improvements in records management practices and programs, under authority of 44 U.S.C. 2904 and 2906. Such disclosure shall be made in accordance with the GSA regulations governing inspection of records for this purpose, and any other relevant (i.e., GSA or Commerce) directive. Such disclosure shall not be used to make determinations about individuals.
8. A record from this system of records may be disclosed, as a routine use, to the public after either publication of the application pursuant to 35 U.S.C. 122(b) or issuance of a patent pursuant to 35 U.S.C. 151. Further, a record may be disclosed, subject to the limitations of 37 CFR 1.14, as a routine use, to the public if the record was filed in an application which became abandoned or in which the proceedings were terminated and which application is referenced by either a published application, an application open to public inspections or an issued patent.
9. A record from this system of records may be disclosed, as a routine use, to a Federal, State, or local law enforcement agency, if the USPTO becomes aware of a violation or potential violation of law or regulation.

Electronic Acknowledgement Receipt

EFS ID:	24922630
Application Number:	14961645
International Application Number:	
Confirmation Number:	4670
Title of Invention:	Hybrid Device Having a Personal Digital Key and Receiver-Decoder Circuit and Methods of Use
First Named Inventor/Applicant Name:	David L. Brown
Customer Number:	89194
Filer:	Paige McDede Alsbury
Filer Authorized By:	
Attorney Docket Number:	10001-05305 US
Receipt Date:	16-FEB-2016
Filing Date:	07-DEC-2015
Time Stamp:	19:10:37
Application Type:	Utility under 35 USC 111(a)

Payment information:

Submitted with Payment	no

File Listing:

Document Number	Document Description	File Name	File Size(Bytes)/ Message Digest	Multi Part /.zip	Pages (if appl.)
1	Power of Attorney	05305US2016-02-16-PowerofAttorney.pdf	648808 793a2c652377ba75b7749ca804b755b61a916363	no	3

Warnings:

Information:

Total Files Size (in bytes):	648808

This Acknowledgement Receipt evidences receipt on the noted date by the USPTO of the indicated documents, characterized by the applicant, and including page counts, where applicable. It serves as evidence of receipt similar to a Post Card, as described in MPEP 503.

New Applications Under 35 U.S.C. 111
If a new application is being filed and the application includes the necessary components for a filing date (see 37 CFR 1.53(b)-(d) and MPEP 506), a Filing Receipt (37 CFR 1.54) will be issued in due course and the date shown on this Acknowledgement Receipt will establish the filing date of the application.

National Stage of an International Application under 35 U.S.C. 371
If a timely submission to enter the national stage of an international application is compliant with the conditions of 35 U.S.C. 371 and other applicable requirements a Form PCT/DO/EO/903 indicating acceptance of the application as a national stage submission under 35 U.S.C. 371 will be issued in addition to the Filing Receipt, in due course.

New International Application Filed with the USPTO as a Receiving Office
If a new international application is being filed and the international application includes the necessary components for an international filing date (see PCT Article 11 and MPEP 1810), a Notification of the International Application Number and of the International Filing Date (Form PCT/RO/105) will be issued in due course, subject to prescriptions concerning national security, and the date shown on this Acknowledgement Receipt will establish the international filing date of the application.

UNITED STATES PATENT AND TRADEMARK OFFICE

UNITED STATES DEPARTMENT OF COMMERCE
United States Patent and Trademark Office
Address: COMMISSIONER FOR PATENTS
P.O. Box 1450
Alexandria, Virginia 22313-1450
www.uspto.gov

APPLICATION NUMBER	FILING OR 371(C) DATE	FIRST NAMED APPLICANT	ATTY. DOCKET NO./TITLE
14/961,645	12/07/2015	David L. Brown	10001-05305 US

CONFIRMATION NO. 4670

POA ACCEPTANCE LETTER

OC000000080996181

89194
Patent Law Works/Proxense
Greg Sueoka
201 South Main Street, Suite 250
Salt Lake City, UT 84111

Date Mailed: 03/09/2016

NOTICE OF ACCEPTANCE OF POWER OF ATTORNEY

This is in response to the Power of Attorney filed 02/16/2016.

The Power of Attorney in this application is accepted. Correspondence in this application will be mailed to the above address as provided by 37 CFR 1.33.

Questions about the contents of this notice and the requirements it sets forth should be directed to the Office of Data Management, Application Assistance Unit, at **(571) 272-4000** or **(571) 272-4200** or **1-888-786-0101**.

/agizaw/

UNITED STATES PATENT AND TRADEMARK OFFICE

UNITED STATES DEPARTMENT OF COMMERCE
United States Patent and Trademark Office
Address: COMMISSIONER FOR PATENTS
P.O. Box 1450
Alexandria, Virginia 22313-1450
www.uspto.gov

APPLICATION NO.	FILING DATE	FIRST NAMED INVENTOR	ATTORNEY DOCKET NO.	CONFIRMATION NO.
14/961,645	12/07/2015	David L. Brown	10001-05305 US	4670

89194 7590 08/08/2016
Patent Law Works/Proxense
Greg Sueoka
201 South Main Street, Suite 250
Salt Lake City, UT 84111

EXAMINER
LEE, JASON T

ART UNIT	PAPER NUMBER
2438	

NOTIFICATION DATE	DELIVERY MODE
08/08/2016	ELECTRONIC

Please find below and/or attached an Office communication concerning this application or proceeding.

The time period for reply, if any, is set in the attached communication.

Notice of the Office communication was sent electronically on above-indicated "Notification Date" to the following e-mail address(es):

docketing@patentlawworks.net
patents@patentlawworks.net

PTOL-90A (Rev. 04/07)

Office Action Summary	Application No. 14/961,645	Applicant(s) BROWN, DAVID L.	
	Examiner JASON LEE	Art Unit 2438	AIA (First Inventor to File) Status No

-- The MAILING DATE of this communication appears on the cover sheet with the correspondence address --

Period for Reply

A SHORTENED STATUTORY PERIOD FOR REPLY IS SET TO EXPIRE 3 MONTHS FROM THE MAILING DATE OF THIS COMMUNICATION.

- Extensions of time may be available under the provisions of 37 CFR 1.136(a). In no event, however, may a reply be timely filed after SIX (6) MONTHS from the mailing date of this communication.
- If NO period for reply is specified above, the maximum statutory period will apply and will expire SIX (6) MONTHS from the mailing date of this communication.
- Failure to reply within the set or extended period for reply will, by statute, cause the application to become ABANDONED (35 U.S.C. § 133). Any reply received by the Office later than three months after the mailing date of this communication, even if timely filed, may reduce any earned patent term adjustment. See 37 CFR 1.704(b).

Status

1)☒ Responsive to communication(s) filed on 12/07/2015.

☐ A declaration(s)/affidavit(s) under **37 CFR 1.130(b)** was/were filed on _____.

2a)☐ This action is **FINAL**. 2b)☒ This action is non-final.

3)☐ An election was made by the applicant in response to a restriction requirement set forth during the interview on _____; the restriction requirement and election have been incorporated into this action.

4)☐ Since this application is in condition for allowance except for formal matters, prosecution as to the merits is closed in accordance with the practice under *Ex parte Quayle*, 1935 C.D. 11, 453 O.G. 213.

Disposition of Claims*

5)☒ Claim(s) 1-20 is/are pending in the application.

5a) Of the above claim(s) _____ is/are withdrawn from consideration.

6)☐ Claim(s) _____ is/are allowed.

7)☒ Claim(s) 1-20 is/are rejected.

8)☐ Claim(s) _____ is/are objected to.

9)☐ Claim(s) _____ are subject to restriction and/or election requirement.

* If any claims have been determined allowable, you may be eligible to benefit from the **Patent Prosecution Highway** program at a participating intellectual property office for the corresponding application. For more information, please see http://www.uspto.gov/patents/init_events/pph/index.jsp or send an inquiry to PPHfeedback@uspto.gov.

Application Papers

10)☐ The specification is objected to by the Examiner.

11)☒ The drawing(s) filed on 12/07/2015 is/are: a)☒ accepted or b)☐ objected to by the Examiner.

Applicant may not request that any objection to the drawing(s) be held in abeyance. See 37 CFR 1.85(a).

Replacement drawing sheet(s) including the correction is required if the drawing(s) is objected to. See 37 CFR 1.121(d).

Priority under 35 U.S.C. § 119

12)☐ Acknowledgment is made of a claim for foreign priority under 35 U.S.C. § 119(a)-(d) or (f).

Certified copies:

a)☐ All b)☐ Some** c)☐ None of the:

1.☐ Certified copies of the priority documents have been received.

2.☐ Certified copies of the priority documents have been received in Application No. _____.

3.☐ Copies of the certified copies of the priority documents have been received in this National Stage application from the International Bureau (PCT Rule 17.2(a)).

** See the attached detailed Office action for a list of the certified copies not received.

Attachment(s)

1) ☐ Notice of References Cited (PTO-892)

2) ☐ Information Disclosure Statement(s) (PTO/SB/08a and/or PTO/SB/08b) Paper No(s)/Mail Date _____.

3) ☐ Interview Summary (PTO-413) Paper No(s)/Mail Date. _____ .

4) ☐ Other: _____.

DETAILED ACTION

1. The present application is being examined under the pre-AIA first to invent provisions. The following is a Non-Final Office action in response to the application filed on December 07, 2015. Claims 1-20 are presented for examination.

Drawings

2. The drawings replacement filed on 12/07/2015 are accepted.

Oath/Declaration

3. For the record, the Examiner acknowledges that the Oath/Declaration submitted on 12/07/2015 has been accepted.

Priority

4. This application is a continuation related to and claimed the benefits of U.S. application No. 60/992,953 dated 12/06/2007.

Double Patenting

5. The nonstatutory double patenting rejection is based on a judicially created doctrine grounded in public policy (a policy reflected in the statute) so as to prevent the unjustified or improper timewise extension of the "right to exclude" granted by a patent and to prevent possible harassment by multiple assignees. A nonstatutory obviousness-type double patenting rejection is appropriate where the conflicting claims are not identical, but at least one examined application claim is not patentably distinct from the reference claim(s) because the examined application claim is either anticipated by, or would have been obvious over, the reference claim(s). See, e.g., *In re Berg*, 140 F.3d 1428, 46 USPQ2d 1226 (Fed. Cir. 1998); *In re Goodman*, 11 F.3d 1046, 29 USPQ2d 2010 (Fed. Cir. 1993); *In re Longi*, 759 F.2d 887, 225 USPQ 645 (Fed. Cir. 1985); *In re Van Ornum*, 686 F.2d 937, 214 USPQ 761 (CCPA 1982); *In re Vogel*, 422 F.2d 438, 164 USPQ 619 (CCPA 1970); and *In re Thorington*, 418 F.2d 528, 163 USPQ 644 (CCPA 1969).

A timely filed terminal disclaimer in compliance with 37 CFR 1.321(c) or 1.321(d) may be used to overcome an actual or provisional rejection based on a nonstatutory double patenting ground provided the conflicting application or patent either is shown to

be commonly owned with this application, or claims an invention made as a result of activities undertaken within the scope of a joint research agreement.

Effective January 1, 1994, a registered attorney or agent of record may sign a terminal disclaimer. A terminal disclaimer signed by the assignee must fully comply with 37 CFR 3.73(b).

The USPTO internet Web site contains terminal disclaimer forms which may be used. Please visit http://www.uspto.gov/forms/. The filing date of the application will determine what form should be used. **A web-based eTerminal Disclaimer may be filled out completely online using web-screens. An eTerminal Disclaimer that meets all requirements is auto-processed and approved immediately upon submission.** For more information about eTerminal Disclaimers, refer to http://www.uspto.gov/patents/process/file/efs/guidance/eTD-info-I.jsp.

Claims 1-6 and 11-20 are rejected on the ground of nonstatutory obviousness-type double patenting as being unpatentable over claims 1-8, 10-14, 16, 18 and 20 of U.S. patent 9,235,700, claims 1-20 of U.S. patent 9,049,188, claims 1, and 12 of US patent No. 8,171,528 B1 and claims 1 and 10 of US patent No. 8, 646,042 B1.

Although the conflicting claims are not identical, they are not patentably distinct from (see one-on-one claim comparison table below) each other because claims 1-6 and 11-20 of the instant application are anticipated by the subject matter recited in claims 1-8, 10-14, 16, 18 and 20 of U.S. patent 9,235,700, 1-20 of U.S. patent 9,049,188, claims 1 and 12 of US patent No. 8,171,528 B1 and claims 1 and 10 of US patent No. 8, 646,042 B1 correspondingly.

Claim Comparison Table

Instant	US 9,235,700	US 9,049,188	US 8,171,528	US 8, 646,042

application				
1. A hybrid device comprising: an integrated, secure memory storing local, secured information; and an integrated reader-decoder circuit (RDC) for communicating wirelessly with at least one external device within a proximity zone, the integrated RDC communicatively coupled to the	1. A hybrid device comprising: an integrated personal digital key (PDK) for storing local, secured financial information a user and capable of communicating wirelessly with an external receiver-decoder circuit (RDC); and an integrated RDC for communicating	1. A hybrid device comprising: an integrated personal digital key (PDK) for storing local, secured biometric information for authenticating a user and capable of communicating wirelessly with an external receiver-decoder circuit (RDC); and an integrated RDC for	1. A hybrid device for use in a proximity system, the hybrid device comprising: a first personal digital key (PDK) for storing information and capable of communicating wirelessly, the PDK for linking with at least one external receiver-decoder circuit (RDC);	1. A hybrid device comprising: an integrated personal digital key (PDK) for storing information and capable of communicating wirelessly with at least one external receiver-decoder circuit (RDC); and an integrated RDC for communicating wirelessly with at least one

integrated, secure memory for communication with the integrated, secure memory, wherein one or more of (a) the integrated RDC communicating wirelessly with the at least one external device within the proximity zone and (b) the local, secured information stored by the integrated, secure memory	wirelessly with at least one external PDK within a proximity zone, the integrated RDC coupled to the integrated PDK by a first signal line for communication, the integrated RDC coupled to at least one other component of the hybrid device by a second signal line, one or more of the integrated RDC	communicating wirelessly with at least one external PDK within a proximity zone, the integrated RDC coupled to the integrated PDK by a first signal line for communication, the integrated RDC coupled to at least one other component of the hybrid device by a second signal line, one or more of the	and a receiver-decoder circuit (RDC) for linking with at least one external PDKs, the RDC capable of communicatin g wirelessly with the external PDK, the RDC coupled to the PDK by a first signal line and coupled for communicatio n with the first PDK, the RDC	external PDK within a proximity zone, the integrated RDC coupled to the integrated PDK by a first signal line for communication , the integrated RDC coupled to at least one other component of the hybrid device by a second signal line, one or more of the integrated RDC and integrated

enables one or more of an application, a function, and a service.	and integrated PDK enabling one or more of an application, a function, and a service.	integrated RDC and integrated PDK enabling one or more of an application, a function, and a service.	coupled to a second signal line for communicatin g and enabling an external device.	PDK enabling one or more of an application, a function, and a service on one or more of the hybrid device and a device associated with the external RDC.
2. The hybrid device of claim 1, wherein at least one of the one or more of the application, the function, and the service is enabled, at least in part, on	2. The hybrid device of claim 1, wherein at least one of the one or more of the application, the function, and the service are enabled at least in part on	2. The hybrid device of claim 2, wherein at least one of the one or more of the application, the function, and the service are enabled at least in part on		

the hybrid device.	the hybrid device.	the hybrid device.		
3. The hybrid device of claim 1, wherein at least one of the one or more of the application, the function, and the service is enabled, at least in part, external to the hybrid device using an external RDC, the hybrid device communicatively coupled to wirelessly communicate	3. The hybrid device of claim 1, wherein at least one of the one or more of the application, the function, and the service are enabled at least in part on a device external to the hybrid device and communicatively coupled to the external RDC.	3. The hybrid device of claim 2, wherein at least one of the one or more of the application, the function, and the service are enabled at least in part on a device external to the hybrid device and communicatively coupled to the external RDC.		

with the external RDC.				
4. The hybrid device of claim 1, wherein the local, secured information includes biometric information for authenticating a user.	4. The hybrid device of claim 1, wherein the integrated PDK includes local, secured biometric information for authenticating a user, the biometric information based on one or more of a fingerprint, palmprint, a retinal scan, an iris scan, a photograph, a signature, a	4. The hybrid device of claim 2, wherein the local, secured biometric information for authenticating a user is based on one or more of a fingerprint, palm print, a retinal scan, an iris scan, a photograph, a signature, a voice sample, DNA and RNA.		

	voice sample, DNA and RNA.			
5. The hybrid device of claim 1, wherein the local, secured information includes biometric information based on a biometric scan of a finger, the biometric information for authenticating a user.	partial of #4	Partial of #4		
6. The hybrid device of claim 1, wherein the local, secure information includes financial information and at least one of the one or more of the application, the	6. The hybrid device of claim 1, wherein the integrated PDK stores local, secured financial information and at least one of the one or more of the application, the	6. The hybrid device of claim 2, wherein the integrated PDK stores local, secured financial information and at least one of the one or more of the application, the		

function, and the service enabled completes a financial transaction based on the financial information.	function, and the service enabled completes a financial transaction based on the financial information.	function, and the service enabled completes a financial transaction based on the financial information.		
11. The hybrid device of claim 1, wherein the hybrid device is a cell phone.	7. The hybrid device of claim 1, wherein the hybrid device is a cell phone.	7. The hybrid device of claim 2, wherein the hybrid device is a cell phone.		
12. The hybrid device of claim 1, wherein the at least one device is included in jewelry.	8. The hybrid device of claim 1, wherein the external PDK is included in jewelry.	8. The hybrid device of claim 2, wherein the external PDK is included in jewelry.		
	9. The hybrid	9. The hybrid		

	device of claim 1, comprising a storage for inheritance information.	device of claim 2, comprising a storage for inheritance information.		
13. The hybrid device of claim 1, wherein the at least one device is a watch.	10. The hybrid device of claim 1, wherein the external PDK is included in a watch.	10. The hybrid device of claim 2, wherein the external PDK is included in a watch.		
14. A method comprising: creating a first wireless link between an integrated receiver-decoder circuit (RDC) of a hybrid device and an external	11. A method comprising: creating a first wireless link between an integrated receiver-decoder circuit (RDC) of a hybrid device and an external	11. A method comprising: creating a first wireless link between an integrated receiver-decoder circuit (RDC) of a hybrid device and an external	12. A method of using a hybrid device having an receiver-decoder circuit (RDC) and a personal digital key (PDK) to control access	10. A method comprising: creating a first wireless link between an integrated receiver-decoder circuit (RDC) of a hybrid device and an external

device, the hybrid device including an integrated, secure memory and the integrated RDC, wherein the integrated, secure memory stores local, secured information; receiving a first signal, at the integrated RDC, via the first wireless link, from the external device; generating an enablement	personal digital key (PDK), the hybrid device including an integrated PDK and the integrated RDC, wherein the integrated PDK stores local, secured financial information; receiving a first signal at the integrated RDC via the first wireless link from the external PDK; generating an enablement	personal digital key (PDK), the hybrid device including an integrated PDK and the integrated RDC, wherein the integrated PDK stores local, secured biometric information for authenticating a user; receiving a first signal at the integrated RDC via the first wireless link from the external PDK; generating an	to a system, the method comprising: creating a first wireless link between the receiver-decoder circuit of the hybrid device and an external personal digital key (PDK); receiving a first authorization signal at the RDC via the first wireless link	personal digital key (PDK), the hybrid device including an integrated PDK and the integrated RDC; receiving a first signal at the integrated RDC via the first wireless link from the external PDK; generating an enablement signal enabling one or more of an application, a function and a

signal enabling one or more of an application, a function and a service.	signal enabling one or more of an application, a function and a service.	enablement signal enabling one or more of an application, a function and a service.	from the PDK; enabling a second wireless link between the PDK of the hybrid device and an external RDC; generating an enablement signal with the RDC; and sending the enablement signal to the system.	service on one or more of the hybrid device and a device associated with an external RDC; and sending the enablement signal to one or more of the hybrid device and the device associated with an external RDC.
15. The method of claim 14, wherein at least one of the one	12. The method of claim 11 further comprising:	12. The method of claim 11 further comprising:		

or more of the application, the function, and the service is enabled at least in part on the hybrid device.	sending the enablement signal to the hybrid device, wherein at least one of the one or more of the application, the function, and the service are enabled at least in part on the hybrid device.	sending the enablement signal to the hybrid device, wherein at least one of the one or more of the application, the function, and the service are enabled at least in part on the hybrid device.		
16. The method of claim 14 further comprising: sending the enablement signal, wherein at least one of the one or more	13. The method of claim 11 further comprising: sending the enablement signal to the hybrid device, wherein at least	13. The method of claim 11 further comprising: sending the enablement signal to the hybrid device, wherein at least		

of the application, the function, and the service is enabled at least in part on a device external to the hybrid device and communicatively coupled to an external RDC.	one of the one or more of the application, the function, and the service are enabled at least in part on a device external to the hybrid device and communicatively coupled to the external RDC.	one of the one or more of the application, the function, and the service are enabled at least in part on a device external to the hybrid device and communicatively coupled to the external RDC.		
17. The method of claim 14, wherein the local, secured information includes biometric information for authenticating a	14. The method of claim 11, wherein the integrated PDK includes local, secured biometric information for authenticating a	14. The method of claim 11, wherein the local, secured biometric information for authenticating a user is based on one or more		

user.	user, the biometric information based on one or more of a fingerprint, palmprint, a retinal scan, an iris scan, a photograph, a signature, a voice sample, DNA and RNA.	of a fingerprint, palm print, a retinal scan, an iris scan, a photograph, a signature, a voice sample, DNA and RNA.		
	15. The method of claim 11, wherein the external PDK stores local, secured financial information.	15. The method of claim 11, wherein the integrated PDK stores local, secured financial information.		
19. The method	16. The method	16. The method		

of claim 14, wherein the hybrid device is a cell phone.	of claim 11, wherein the hybrid device is a cell phone.	of claim 11, wherein the hybrid device is a cell phone.		
	17. The method of claim 11, wherein the external PDK is included in jewelry.	17. The method of claim 11, wherein the external PDK is included in jewelry.		
18. The method of claim 14, wherein the local, secured information includes financial information and wherein the one or more of the application, the function and the	18. The method of claim 11, wherein the integrated PDK is electrically coupled to the integrated RDC, and the method further comprises: creating a second wireless	18. The method of claim 11, wherein the integrated PDK is electrically coupled to the integrated RDC, and the method further comprises: creating a second wireless		

service completes a financial transaction.	link between the integrated PDK and an external RDC; and sending the enablement signal from the integrated PDK to the external RDC using the second wireless link, the enablement signal based on financial information stored locally and securely on the integrated PDK and used to complete a financial	link between the integrated PDK and an external RDC; and sending the enablement signal from the integrated PDK to the external RDC using the second wireless link, the enablement signal based on financial information stored locally and securely on the integrated PDK and used to complete a financial		

	transaction.	transaction.		
	19. The method of claim 11, wherein the first signal includes inheritance information.	19. The method of claim 11, wherein the first signal includes inheritance information.		
20. The method of claim 14, wherein the external PDK is included in a watch.	20. The method of claim 11, wherein the external PDK is included in a watch.	20. The method of claim 11, wherein the external PDK is included in a watch.		

Claim limitations of instant application is similar in nature to the US Patent 9,235,700, U.S. patent 9,049,188, US patent 8,171,528 and US patent 8, 646,042 as its parent cases which clearly be seen from the comparison table.

Allowable Subject Matter

6. Independent Claims 1 and 14 are considered to be allowable if the double patenting rejection is overcome by a properly filed Terminal Disclaimer.

Conclusion

Any inquiry concerning this communication or earlier communications from the examiner should be directed to JASON LEE whose telephone number is (571)270-7477. The examiner can normally be reached on Monday-Friday 9/5/4 (altering Friday off).

If attempts to reach the examiner by telephone are unsuccessful, the examiner's supervisor, Taghi T Arani can be reached on (571)272-3787. The fax phone number for the organization where this application or proceeding is assigned is 571-273-8300.

Information regarding the status of an application may be obtained from the Patent Application Information Retrieval (PAIR) system. Status information for published applications may be obtained from either Private PAIR or Public PAIR. Status information for unpublished applications is available through Private PAIR only. For more information about the PAIR system, see http://pair-direct.uspto.gov. Should you have questions on access to the Private PAIR system, contact the Electronic Business Center (EBC) at 866-217-9197 (toll-free). If you would like assistance from a USPTO Customer Service Representative or access to the automated information system, call 800-786-9199 (IN USA OR CANADA) or 571-272-1000.

/JASON LEE/

Primary Examiner, Art Unit 2438

UNITED STATES PATENT AND TRADEMARK OFFICE

UNITED STATES DEPARTMENT OF COMMERCE
United States Patent and Trademark Office
Address: COMMISSIONER FOR PATENTS
P.O. Box 1450
Alexandria, Virginia 22313-1450
www.uspto.gov

BIB DATA SHEET

CONFIRMATION NO. 4670

SERIAL NUMBER	FILING or 371(c) DATE	CLASS	GROUP ART UNIT	ATTORNEY DOCKET NO.
14/961,645	12/07/2015 **RULE**	726	2438	10001-05305 US

APPLICANTS
Proxense, LLC, Bend, OR;

INVENTORS
David L. Brown, Jupiter, FL;

**** CONTINUING DATA ***************************
This application is a CON of 14/677,893 04/02/2015 PAT 9235700
which is a CON of 14/171,705 02/03/2014 PAT 9049188
which is a CON of 13/445,825 04/12/2012 PAT 8646042
which is a CON of 12/329,329 12/05/2008 PAT 8171528
which claims benefit of 60/992,953 12/06/2007

**** FOREIGN APPLICATIONS ****************************

**** IF REQUIRED, FOREIGN FILING LICENSE GRANTED** ** ** SMALL ENTITY **
12/22/2015

Foreign Priority claimed	☐ Yes ☑ No		STATE OR COUNTRY	SHEETS DRAWINGS	TOTAL CLAIMS	INDEPENDENT CLAIMS
35 USC 119(a-d) conditions met	☐ Yes ☑ No	☐ Met after Allowance				
Verified and Acknowledged	/JASON T LEE/ Examiner's Signature	Initials	FL	15	20	2

ADDRESS
Patent Law Works/Proxense
Greg Sueoka
201 South Main Street, Suite 250
Salt Lake City, UT 84111
UNITED STATES

TITLE
Hybrid Device Having a Personal Digital Key and Receiver-Decoder Circuit and Methods of Use

FILING FEE RECEIVED		
730	FEES: Authority has been given in Paper No._____ to charge/credit DEPOSIT ACCOUNT No._____ for following:	☐ All Fees ☐ 1.16 Fees (Filing) ☐ 1.17 Fees (Processing Ext. of time) ☐ 1.18 Fees (Issue) ☐ Other _____ ☐ Credit

BIB (Rev. 05/07).

Index of Claims	Application/Control No.	Applicant(s)/Patent Under Reexamination
	14961645	BROWN, DAVID L.
	Examiner	**Art Unit**
	JASON LEE	2438

✓	Rejected	-	Cancelled	N	Non-Elected	A	Appeal
=	Allowed	÷	Restricted	I	Interference	O	Objected

☐ Claims renumbered in the same order as presented by applicant ☐ CPA ☐ T.D. ☐ R.1.47

CLAIM		DATE								
Final	Original	08/02/2016								
	1	✓								
	2	✓								
	3	✓								
	4	✓								
	5	✓								
	6	✓								
	7	✓								
	8	✓								
	9	✓								
	10	✓								
	11	✓								
	12	✓								
	13	✓								
	14	✓								
	15	✓								
	16	✓								
	17	✓								
	18	✓								
	19	✓								
	20	✓								

EAST Search History

EAST Search History (Prior Art)

Ref #	Hits	Search Query	DBs	Default Operator	Plurals	Time Stamp
S1	2	"8171528".pn.	US-PGPUB; USPAT; USOCR; FPRS; EPO; JPO; DERWENT; IBM_TDB	ADJ	ON	2014/09/16 18:18
S2	2	"8646942".pn.	US-PGPUB; USPAT; USOCR; FPRS; EPO; JPO; DERWENT; IBM_TDB	ADJ	ON	2014/09/16 18:19
S3	2	"8646042".pn.	US-PGPUB; USPAT; USOCR; FPRS; EPO; JPO; DERWENT; IBM_TDB	ADJ	ON	2014/09/16 18:19
S4	2	"20060208066".pn.	US-PGPUB; USPAT; USOCR; FPRS; EPO; JPO; DERWENT; IBM_TDB	ADJ	ON	2014/09/16 19:50
S5	3	"20060113381".pn.	US-PGPUB; USPAT; USOCR; FPRS; EPO; JPO; DERWENT; IBM_TDB	ADJ	ON	2014/09/17 11:43
S6	2	"20060208066".pn. and signal	US-PGPUB; USPAT; USOCR; FPRS; EPO; JPO; DERWENT; IBM_TDB	ADJ	ON	2014/09/17 12:37
S7	2	"20070271194".pn.	US-PGPUB; USPAT; USOCR; FPRS; EPO; JPO; DERWENT; IBM_TDB	ADJ	ON	2015/01/09 13:00
S8	0	(integrated personal digital key) with (biometric information) with (receiver-decoder circuit)	US-PGPUB; USPAT; USOCR; FPRS; EPO; JPO; DERWENT; IBM_TDB	ADJ	ON	2015/01/09 13:15
S9	0	(integrated personal digital key) with (biometric information)	US-PGPUB; USPAT; USOCR; FPRS; EPO; JPO; DERWENT; IBM_TDB	ADJ	ON	2015/01/09 13:15
S10	0	(integrated key) with (biometric information)	US-PGPUB; USPAT; USOCR; FPRS; EPO; JPO; DERWENT; IBM_TDB	ADJ	ON	2015/01/09 13:15
S11	5	(integrated key) with (biometric)	US-PGPUB; USPAT; USOCR; FPRS; EPO; JPO; DERWENT; IBM_TDB	ADJ	ON	2015/01/09 13:16
S12	0	((integrated key) with (biometric)) same (decoder circuit)	US-PGPUB; USPAT; USOCR; FPRS; EPO; JPO; DERWENT; IBM_TDB	ADJ	ON	2015/01/09 13:17

S17	1	"9049188".pn.	US-PGPUB; USPAT; USOCR; FPRS; EPO; JPO; DERWENT; IBM_TDB	ADJ	ON	2015/05/23 15:07
S20	2	"9235700".pn.	US-PGPUB; USPAT; USOCR; FPRS; EPO; JPO; DERWENT; IBM_TDB	ADJ	ON	2016/08/02 14:41
S21	3	"9049188".pn.	US-PGPUB; USPAT; USOCR; FPRS; EPO; JPO; DERWENT; IBM_TDB	ADJ	ON	2016/08/02 15:10

EAST Search History (Interference)

Ref #	Hits	Search Query	DBs	Default Operator	Plurals	Time Stamp
S13	0	(integrated personal digital key) with (biometric information) with (receiver-decoder circuit).clm.	US-PGPUB; USPAT; * No UPAD	ADJ	ON	2015/01/09 13:13
S14	0	(integrated personal digital key) with (biometric information) same (receiver-decoder circuit) and (application or function or service).clm.	US-PGPUB; USPAT; * No UPAD	ADJ	ON	2015/01/09 13:14
S15	0	(integrated personal digital key) with (biometric information) with (receiver-decoder circuit)	US-PGPUB; USPAT; * No UPAD	ADJ	ON	2015/01/09 13:15
S16	0	(integrated personal digital key) with (biometric information) with (receiver-decoder circuit).clm.	US-PGPUB; USPAT; * No UPAD	ADJ	ON	2015/01/09 13:18
S18	0	(integrated personal digital key) with (financial information) with (receiver-decoder circuit).clm.	US-PGPUB; USPAT; * No UPAD	ADJ	ON	2015/09/01 15:46
S19	0	(integrated personal digital key) with (financial information) same (receiver-decoder circuit) and (application or function or service).clm.	US-PGPUB; USPAT; * No UPAD	ADJ	ON	2015/09/01 15:47

8/2/2016 4:54:53 PM
C:\Users\jlee16\Documents\EAST\Workspaces\14961645-080216.wsp

Search Notes	Application/Control No.	Applicant(s)/Patent Under Reexamination
	14961645	BROWN, DAVID L.
	Examiner	**Art Unit**
	JASON LEE	2438

CPC- SEARCHED		
Symbol	**Date**	**Examiner**

CPC COMBINATION SETS - SEARCHED		
Symbol	**Date**	**Examiner**

US CLASSIFICATION SEARCHED			
Class	**Subclass**	**Date**	**Examiner**
726	3	8/2/16	JL

SEARCH NOTES		
Search Notes	**Date**	**Examiner**
EAST searched, google searched	8/2/16	JL
DP searched	8/2/16	JL

INTERFERENCE SEARCH			
US Class/ CPC Symbol	**US Subclass / CPC Group**	**Date**	**Examiner**

PTO/SB/08a (03-15)
Approved for use through 07/31/2016. OMB 0651-0031
U.S. Patent and Trademark Office; U.S. DEPARTMENT OF COMMERCE
Under the Paperwork Reduction Act of 1995, no persons are required to respond to a collection of information unless it contains a valid OMB control number.

INFORMATION DISCLOSURE STATEMENT BY APPLICANT

(Not for submission under 37 CFR 1.99)

Application Number	14961645
Filing Date	2015-12-07
First Named Inventor	David L. Brown
Art Unit	2438
Examiner Name	Jason T. Lee
Attorney Docket Number	10001-05305 US

U.S.PATENTS Remove

Examiner Initial*	Cite No	Patent Number	Kind Code[1]	Issue Date	Name of Patentee or Applicant of cited Document	Pages,Columns,Lines where Relevant Passages or Relevant Figures Appear
	1	5623552		1997-04-22	Lane	
	2	6728397		2004-04-27	McNeal	
	3	6879966		2005-04-12	Lapsley et al.	
	4	7159765		2007-01-09	Frerking	
	5	7231068		2007-06-12	Tibor	
	6	7349557		2008-03-25	Tibor	
	7	7565329		2009-07-21	Lapsley et al.	
	8	8678273		2014-03-25	McNeal	

If you wish to add additional U.S. Patent citation information please click the Add button. Add

INFORMATION DISCLOSURE STATEMENT BY APPLICANT (Not for submission under 37 CFR 1.99)		
	Application Number	14961645
	Filing Date	2015-12-07
	First Named Inventor	David L. Brown
	Art Unit	2438
	Examiner Name	Jason T. Lee
	Attorney Docket Number	10001-05305 US

U.S.PATENT APPLICATION PUBLICATIONS Remove

Examiner Initial*	Cite No	Publication Number	Kind Code[1]	Publication Date	Name of Patentee or Applicant of cited Document	Pages,Columns,Lines where Relevant Passages or Relevant Figures Appear
	1	20050116020		2005-06-02	Smolucha et al.	
	2	20070271194		2007-11-22	Walker et al.	

If you wish to add additional U.S. Published Application citation information please click the Add button. Add

FOREIGN PATENT DOCUMENTS Remove

Examiner Initial*	Cite No	Foreign Document Number[3]	Country Code[2] i	Kind Code[4]	Publication Date	Name of Patentee or Applicant of cited Document	Pages,Columns,Lines where Relevant Passages or Relevant Figures Appear	T[5]
	1							

If you wish to add additional Foreign Patent Document citation information please click the Add button Add

NON-PATENT LITERATURE DOCUMENTS Remove

Examiner Initials*	Cite No	Include name of the author (in CAPITAL LETTERS), title of the article (when appropriate), title of the item (book, magazine, journal, serial, symposium, catalog, etc), date, pages(s), volume-issue number(s), publisher, city and/or country where published.	T[5]
	1		

If you wish to add additional non-patent literature document citation information please click the Add button Add

EXAMINER SIGNATURE

Examiner Signature		Date Considered	

*EXAMINER: Initial if reference considered, whether or not citation is in conformance with MPEP 609. Draw line through a citation if not in conformance and not considered. Include copy of this form with next communication to applicant.

EFS Web 2.1.17

INFORMATION DISCLOSURE STATEMENT BY APPLICANT (Not for submission under 37 CFR 1.99)	Application Number	14961645
	Filing Date	2015-12-07
	First Named Inventor	David L. Brown
	Art Unit	2438
	Examiner Name	Jason T. Lee
	Attorney Docket Number	10001-05305 US

[1] See Kind Codes of USPTO Patent Documents at www.USPTO.GOV or MPEP 901.04. [2] Enter office that issued the document, by the two-letter code (WIPO Standard ST.3). [3] For Japanese patent documents, the indication of the year of the reign of the Emperor must precede the serial number of the patent document. [4] Kind of document by the appropriate symbols as indicated on the document under WIPO Standard ST.16 if possible. [5] Applicant is to place a check mark here if English language translation is attached.

INFORMATION DISCLOSURE STATEMENT BY APPLICANT (Not for submission under 37 CFR 1.99)	Application Number	14961645
	Filing Date	2015-12-07
	First Named Inventor	David L. Brown
	Art Unit	2438
	Examiner Name	Jason T. Lee
	Attorney Docket Number	10001-05305 US

CERTIFICATION STATEMENT

Please see 37 CFR 1.97 and 1.98 to make the appropriate selection(s):

That each item of information contained in the information disclosure statement was first cited in any communication from a foreign patent office in a counterpart foreign application not more than three months prior to the filing of the information disclosure statement. See 37 CFR 1.97(e)(1).

OR

☐ That no item of information contained in the information disclosure statement was cited in a communication from a foreign patent office in a counterpart foreign application, and, to the knowledge of the person signing the certification after making reasonable inquiry, no item of information contained in the information disclosure statement was known to any individual designated in 37 CFR 1.56(c) more than three months prior to the filing of the information disclosure statement. See 37 CFR 1.97(e)(2).

See attached certification statement.

☒ The fee set forth in 37 CFR 1.17 (p) has been submitted herewith.

A certification statement is not submitted herewith.

SIGNATURE

A signature of the applicant or representative is required in accordance with CFR 1.33, 10.18. Please see CFR 1.4(d) for the form of the signature.

Signature	/Paige Alsbury/	Date (YYYY-MM-DD)	2016-12-12
Name/Print	Paige M. Aslbury	Registration Number	72,965

This collection of information is required by 37 CFR 1.97 and 1.98. The information is required to obtain or retain a benefit by the public which is to file (and by the USPTO to process) an application. Confidentiality is governed by 35 U.S.C. 122 and 37 CFR 1.14. This collection is estimated to take 1 hour to complete, including gathering, preparing and submitting the completed application form to the USPTO. Time will vary depending upon the individual case. Any comments on the amount of time you require to complete this form and/or suggestions for reducing this burden, should be sent to the Chief Information Officer, U.S. Patent and Trademark Office, U.S. Department of Commerce, P.O. Box 1450, Alexandria, VA 22313-1450. DO NOT SEND FEES OR COMPLETED FORMS TO THIS ADDRESS. **SEND TO: Commissioner for Patents, P.O. Box 1450, Alexandria, VA 22313-1450.**

Privacy Act Statement

The Privacy Act of 1974 (P.L. 93-579) requires that you be given certain information in connection with your submission of the attached form related to a patent application or patent. Accordingly, pursuant to the requirements of the Act, please be advised that: (1) the general authority for the collection of this information is 35 U.S.C. 2(b)(2); (2) furnishing of the information solicited is voluntary; and (3) the principal purpose for which the information is used by the U.S. Patent and Trademark Office is to process and/or examine your submission related to a patent application or patent. If you do not furnish the requested information, the U.S. Patent and Trademark Office may not be able to process and/or examine your submission, which may result in termination of proceedings or abandonment of the application or expiration of the patent.

The information provided by you in this form will be subject to the following routine uses:

1. The information on this form will be treated confidentially to the extent allowed under the Freedom of Information Act (5 U.S.C. 552) and the Privacy Act (5 U.S.C. 552a). Records from this system of records may be disclosed to the Department of Justice to determine whether the Freedom of Information Act requires disclosure of these record s.

2. A record from this system of records may be disclosed, as a routine use, in the course of presenting evidence to a court, magistrate, or administrative tribunal, including disclosures to opposing counsel in the course of settlement negotiations.

3. A record in this system of records may be disclosed, as a routine use, to a Member of Congress submitting a request involving an individual, to whom the record pertains, when the individual has requested assistance from the Member with respect to the subject matter of the record.

4. A record in this system of records may be disclosed, as a routine use, to a contractor of the Agency having need for the information in order to perform a contract. Recipients of information shall be required to comply with the requirements of the Privacy Act of 1974, as amended, pursuant to 5 U.S.C. 552a(m).

5. A record related to an International Application filed under the Patent Cooperation Treaty in this system of records may be disclosed, as a routine use, to the International Bureau of the World Intellectual Property Organization, pursuant to the Patent Cooperation Treaty.

6. A record in this system of records may be disclosed, as a routine use, to another federal agency for purposes of National Security review (35 U.S.C. 181) and for review pursuant to the Atomic Energy Act (42 U.S.C. 218(c)).

7. A record from this system of records may be disclosed, as a routine use, to the Administrator, General Services, or his/her designee, during an inspection of records conducted by GSA as part of that agency's responsibility to recommend improvements in records management practices and programs, under authority of 44 U.S.C. 2904 and 2906. Such disclosure shall be made in accordance with the GSA regulations governing inspection of records for this purpose, and any other relevant (i.e., GSA or Commerce) directive. Such disclosure shall not be used to make determinations about individuals.

8. A record from this system of records may be disclosed, as a routine use, to the public after either publication of the application pursuant to 35 U.S.C. 122(b) or issuance of a patent pursuant to 35 U.S.C. 151. Further, a record may be disclosed, subject to the limitations of 37 CFR 1.14, as a routine use, to the public if the record was filed in an application which became abandoned or in which the proceedings were terminated and which application is referenced by either a published application, an application open to public inspections or an issued patent.

9. A record from this system of records may be disclosed, as a routine use, to a Federal, State, or local law enforcement agency, if the USPTO becomes aware of a violation or potential violation of law or regulation.

Electronic Patent Application Fee Transmittal

Application Number:	14961645
Filing Date:	07-Dec-2015
Title of Invention:	Hybrid Device Having a Personal Digital Key and Receiver-Decoder Circuit and Methods of Use
First Named Inventor/Applicant Name:	David L. Brown
Filer:	Paige McDede Alsbury/Cynthia Kersey
Attorney Docket Number:	10001-05305 US

Filed as Large Entity

Filing Fees for Utility under 35 USC 111(a)

Description	Fee Code	Quantity	Amount	Sub-Total in USD($)
Basic Filing:				
Pages:				
Claims:				
Miscellaneous-Filing:				
Petition:				
Patent-Appeals-and-Interference:				
Post-Allowance-and-Post-Issuance:				
Extension-of-Time:				

Description	Fee Code	Quantity	Amount	Sub-Total in USD($)
Miscellaneous:				
Submission- Information Disclosure Stmt	1806	1	180	180
		Total in USD ($)		**180**

Electronic Acknowledgement Receipt	
EFS ID:	27763181
Application Number:	14961645
International Application Number:	
Confirmation Number:	4670
Title of Invention:	Hybrid Device Having a Personal Digital Key and Receiver-Decoder Circuit and Methods of Use
First Named Inventor/Applicant Name:	David L. Brown
Customer Number:	89194
Filer:	Paige McDede Alsbury
Filer Authorized By:	
Attorney Docket Number:	10001-05305 US
Receipt Date:	12-DEC-2016
Filing Date:	07-DEC-2015
Time Stamp:	16:40:08
Application Type:	Utility under 35 USC 111(a)

Payment information:

Submitted with Payment	yes
Payment Type	CARD
Payment was successfully received in RAM	$180
RAM confirmation Number	121316INTEFSW16410600
Deposit Account	
Authorized User	
The Director of the USPTO is hereby authorized to charge indicated fees and credit any overpayment as follows:	

File Listing:

Document Number	Document Description	File Name	File Size(Bytes)/ Message Digest	Multi Part /.zip	Pages (if appl.)
1	Information Disclosure Statement (IDS) Form (SB08)	05305US2016-12-12-InformationDisclosureStatement.pdf	1035213 d8f81e483c2d54043dbaff354898cfb732351a26	no	5
Warnings:					
Information:					
2	Fee Worksheet (SB06)	fee-info.pdf	30605 02061249b743f9e2e6c4e314e78e0762d146d9ad	no	2
Warnings:					
Information:					
		Total Files Size (in bytes):	1065818		

This Acknowledgement Receipt evidences receipt on the noted date by the USPTO of the indicated documents, characterized by the applicant, and including page counts, where applicable. It serves as evidence of receipt similar to a Post Card, as described in MPEP 503.

<u>New Applications Under 35 U.S.C. 111</u>
If a new application is being filed and the application includes the necessary components for a filing date (see 37 CFR 1.53(b)-(d) and MPEP 506), a Filing Receipt (37 CFR 1.54) will be issued in due course and the date shown on this Acknowledgement Receipt will establish the filing date of the application.

<u>National Stage of an International Application under 35 U.S.C. 371</u>
If a timely submission to enter the national stage of an international application is compliant with the conditions of 35 U.S.C. 371 and other applicable requirements a Form PCT/DO/EO/903 indicating acceptance of the application as a national stage submission under 35 U.S.C. 371 will be issued in addition to the Filing Receipt, in due course.

<u>New International Application Filed with the USPTO as a Receiving Office</u>
If a new international application is being filed and the international application includes the necessary components for an international filing date (see PCT Article 11 and MPEP 1810), a Notification of the International Application Number and of the International Filing Date (Form PCT/RO/105) will be issued in due course, subject to prescriptions concerning national security, and the date shown on this Acknowledgement Receipt will establish the international filing date of the application.

PTO/AIA/26 (04-14)
Approved for use through 07/31/2016. OMB 0651-0031
U.S. Patent and Trademark Office; U.S. DEPARTMENT OF COMMERCE
Under the Paperwork Reduction Act of 1995, no persons are required to respond to a collection of information unless it displays a valid OMB control number.

TERMINAL DISCLAIMER TO OBVIATE A DOUBLE PATENTING REJECTION OVER A "PRIOR" PATENT	Docket Number (Optional) 10001-05305 US

In re Application of: David L. Brown

Application No.: 14/961,645

Filed: December 7, 2015

For: Hybrid Device Having a Personal Digital Key and Receiver-Decoder Circuit and Methods of Use

The applicant, Proxense, LLC, owner of 100 percent interest in the instant application hereby disclaims, except as provided below, the terminal part of the statutory term of any patent granted on the instant application which would extend beyond the expiration date of the full statutory term of **prior patent** No. 9235700 & 9049188 as the term of said **prior patent** is presently shortened by any terminal disclaimer. The applicant hereby agrees that any patent so granted on the instant application shall be enforceable only for and during such period that it and the **prior patent** are commonly owned. This agreement runs with any patent granted on the instant application and is binding upon the grantee, its successors or assigns.

In making the above disclaimer, the applicant does not disclaim the terminal part of the term of any patent granted on the instant application that would extend to the expiration date of the full statutory term of the **prior patent**, "as the term of said **prior patent** is presently shortened by any terminal disclaimer," in the event that said **prior patent** later:

expires for failure to pay a maintenance fee;
is held unenforceable;
is found invalid by a court of competent jurisdiction;
is statutorily disclaimed in whole or terminally disclaimed under 37 CFR 1.321;
has all claims canceled by a reexamination certificate;
is reissued; or
is in any manner terminated prior to the expiration of its full statutory term as presently shortened by any terminal disclaimer.

Check either box 1 or 2 below, if appropriate.

1. ☐ The undersigned is the applicant. If the applicant is an assignee, the undersigned is authorized to act on behalf of the assignee.

I hereby acknowledge that any willful false statements made are punishable under 18 U.S.C. 1001 by fine or imprisonment of not more than five (5) years, or both.

2. ☑ The undersigned is an attorney or agent of record. Reg. No. 65,160

/Matthew M. Holmes/	December 30, 2016
Signature	Date
Matthew M. Holmes	
Typed or printed name	
Attorney of Record	(385) 232-7853
Title	Telephone Number

☑ Terminal disclaimer fee under 37 CFR 1.20(d) included.

WARNING: Information on this form may become public. Credit card information should not be included on this form. Provide credit card information and authorization on PTO-2038.

This collection of information is required by 37 CFR 1.321. The information is required to obtain or retain a benefit by the public which is to file (and by the USPTO to process) an application. Confidentiality is governed by 35 U.S.C. 122 and 37 CFR 1.11 and 1.14. This collection is estimated to take 12 minutes to complete, including gathering, preparing, and submitting the completed application form to the USPTO. Time will vary depending upon the individual case. Any comments on the amount of time you require to complete this form and/or suggestions for reducing this burden, should be sent to the Chief Information Officer, U.S. Patent and Trademark Office, U.S. Department of Commerce, P.O. Box 1450, Alexandria, VA 22313-1450. DO NOT SEND FEES OR COMPLETED FORMS TO THIS ADDRESS. **SEND TO: Commissioner for Patents, P.O. Box 1450, Alexandria, VA 22313-1450.**

If you need assistance in completing the form, call 1-800-PTO-9199 and select option 2.

Privacy Act Statement

The **Privacy Act of 1974 (P.L. 93-579)** requires that you be given certain information in connection with your submission of the attached form related to a patent application or patent. Accordingly, pursuant to the requirements of the Act, please be advised that: (1) the general authority for the collection of this information is 35 U.S.C. 2(b)(2); (2) furnishing of the information solicited is voluntary; and (3) the principal purpose for which the information is used by the U.S. Patent and Trademark Office is to process and/or examine your submission related to a patent application or patent. If you do not furnish the requested information, the U.S. Patent and Trademark Office may not be able to process and/or examine your submission, which may result in termination of proceedings or abandonment of the application or expiration of the patent.

The information provided by you in this form will be subject to the following routine uses:

1. The information on this form will be treated confidentially to the extent allowed under the Freedom of Information Act (5 U.S.C. 552) and the Privacy Act (5 U.S.C 552a). Records from this system of records may be disclosed to the Department of Justice to determine whether disclosure of these records is required by the Freedom of Information Act.
2. A record from this system of records may be disclosed, as a routine use, in the course of presenting evidence to a court, magistrate, or administrative tribunal, including disclosures to opposing counsel in the course of settlement negotiations.
3. A record in this system of records may be disclosed, as a routine use, to a Member of Congress submitting a request involving an individual, to whom the record pertains, when the individual has requested assistance from the Member with respect to the subject matter of the record.
4. A record in this system of records may be disclosed, as a routine use, to a contractor of the Agency having need for the information in order to perform a contract. Recipients of information shall be required to comply with the requirements of the Privacy Act of 1974, as amended, pursuant to 5 U.S.C. 552a(m).
5. A record related to an International Application filed under the Patent Cooperation Treaty in this system of records may be disclosed, as a routine use, to the International Bureau of the World Intellectual Property Organization, pursuant to the Patent Cooperation Treaty.
6. A record in this system of records may be disclosed, as a routine use, to another federal agency for purposes of National Security review (35 U.S.C. 181) and for review pursuant to the Atomic Energy Act (42 U.S.C. 218(c)).
7. A record from this system of records may be disclosed, as a routine use, to the Administrator, General Services, or his/her designee, during an inspection of records conducted by GSA as part of that agency's responsibility to recommend improvements in records management practices and programs, under authority of 44 U.S.C. 2904 and 2906. Such disclosure shall be made in accordance with the GSA regulations governing inspection of records for this purpose, and any other relevant (*i.e.*, GSA or Commerce) directive. Such disclosure shall not be used to make determinations about individuals.
8. A record from this system of records may be disclosed, as a routine use, to the public after either publication of the application pursuant to 35 U.S.C. 122(b) or issuance of a patent pursuant to 35 U.S.C. 151. Further, a record may be disclosed, subject to the limitations of 37 CFR 1.14, as a routine use, to the public if the record was filed in an application which became abandoned or in which the proceedings were terminated and which application is referenced by either a published application, an application open to public inspection or an issued patent.
9. A record from this system of records may be disclosed, as a routine use, to a Federal, State, or local law enforcement agency, if the USPTO becomes aware of a violation or potential violation of law or regulation.

Electronic Patent Application Fee Transmittal

Application Number:	14961645
Filing Date:	07-Dec-2015
Title of Invention:	Hybrid Device Having a Personal Digital Key and Receiver-Decoder Circuit and Methods of Use
First Named Inventor/Applicant Name:	David L. Brown
Filer:	Matthew M. Holmes/Cynthia Kersey
Attorney Docket Number:	10001-05305 US

Filed as Small Entity

Filing Fees for Utility under 35 USC 111(a)

Description	Fee Code	Quantity	Amount	Sub-Total in USD($)
Basic Filing:				
Pages:				
Claims:				
Miscellaneous-Filing:				
Petition:				
Patent-Appeals-and-Interference:				
Post-Allowance-and-Post-Issuance:				
Extension-of-Time:				

Description	Fee Code	Quantity	Amount	Sub-Total in USD($)
Extension - 2 months with $0 paid	2252	1	300	300
Miscellaneous:				
STATUTORY OR TERMINAL DISCLAIMER	2814	1	160	160
		Total in USD ($)		**460**

Electronic Acknowledgement Receipt	
EFS ID:	27943879
Application Number:	14961645
International Application Number:	
Confirmation Number:	4670
Title of Invention:	Hybrid Device Having a Personal Digital Key and Receiver-Decoder Circuit and Methods of Use
First Named Inventor/Applicant Name:	David L. Brown
Customer Number:	89194
Filer:	Matthew M. Holmes
Filer Authorized By:	
Attorney Docket Number:	10001-05305 US
Receipt Date:	30-DEC-2016
Filing Date:	07-DEC-2015
Time Stamp:	18:30:32
Application Type:	Utility under 35 USC 111(a)

Payment information:

Submitted with Payment	yes
Payment Type	CARD
Payment was successfully received in RAM	$460
RAM confirmation Number	010317INTEFSW18315100
Deposit Account	
Authorized User	
The Director of the USPTO is hereby authorized to charge indicated fees and credit any overpayment as follows:	

File Listing:

Document Number	Document Description	File Name	File Size(Bytes)/ Message Digest	Multi Part /.zip	Pages (if appl.)
1		05305US2016-12-30-AmendmentA.pdf	36748 1c796637d77028b26914fc89aee1d5ce0de196d1	yes	7
	Multipart Description/PDF files in .zip description				
	Document Description		**Start**	**End**	
	Amendment/Req. Reconsideration-After Non-Final Reject		1	1	
	Claims		2	5	
	Applicant Arguments/Remarks Made in an Amendment		6	7	
Warnings:					
Information:					
2	Terminal Disclaimer Filed	05305US2016-12-30-TerminalDisclaimer1.pdf	163351 69c3a9da37ab15ce57a39423eff8734b4f279d28	no	2
Warnings:					
Information:					
3	Terminal Disclaimer Filed	05305US2016-12-30-TerminalDisclaimer2.pdf	163352 2dd02893799a25a10b77c03ce263d018ac9dbd35	no	2
Warnings:					
Information:					
4	Fee Worksheet (SB06)	fee-info.pdf	32816 2823d7d8682b0258653a3a501eba46a7f99617a3	no	2
Warnings:					
Information:					
		Total Files Size (in bytes):	396267		

This Acknowledgement Receipt evidences receipt on the noted date by the USPTO of the indicated documents, characterized by the applicant, and including page counts, where applicable. It serves as evidence of receipt similar to a Post Card, as described in MPEP 503.

New Applications Under 35 U.S.C. 111
If a new application is being filed and the application includes the necessary components for a filing date (see 37 CFR 1.53(b)-(d) and MPEP 506), a Filing Receipt (37 CFR 1.54) will be issued in due course and the date shown on this Acknowledgement Receipt will establish the filing date of the application.

National Stage of an International Application under 35 U.S.C. 371
If a timely submission to enter the national stage of an international application is compliant with the conditions of 35 U.S.C. 371 and other applicable requirements a Form PCT/DO/EO/903 indicating acceptance of the application as a national stage submission under 35 U.S.C. 371 will be issued in addition to the Filing Receipt, in due course.

New International Application Filed with the USPTO as a Receiving Office
If a new international application is being filed and the international application includes the necessary components for an international filing date (see PCT Article 11 and MPEP 1810), a Notification of the International Application Number and of the International Filing Date (Form PCT/RO/105) will be issued in due course, subject to prescriptions concerning national security, and the date shown on this Acknowledgement Receipt will establish the international filing date of the application.

PTO/AIA/26 (04-14)
Approved for use through 07/31/2016. OMB 0651-0031
U.S. Patent and Trademark Office; U.S. DEPARTMENT OF COMMERCE
Under the Paperwork Reduction Act of 1995, no persons are required to respond to a collection of information unless it displays a valid OMB control number.

TERMINAL DISCLAIMER TO OBVIATE A DOUBLE PATENTING REJECTION OVER A "PRIOR" PATENT	Docket Number (Optional) 10001-05305 US

In re Application of: David L. Brown

Application No.: 14/961,645

Filed: December 7, 2015

For: Hybrid Device Having a Personal Digital Key and Receiver-Decoder Circuit and Methods of Use

The applicant, Proxense, LLC, owner of 100 percent interest in the instant application hereby disclaims, except as provided below, the terminal part of the statutory term of any patent granted on the instant application which would extend beyond the expiration date of the full statutory term of **prior patent** No. 8171528 & 8646042 as the term of said **prior patent** is presently shortened by any terminal disclaimer. The applicant hereby agrees that any patent so granted on the instant application shall be enforceable only for and during such period that it and the **prior patent** are commonly owned. This agreement runs with any patent granted on the instant application and is binding upon the grantee, its successors or assigns.

In making the above disclaimer, the applicant does not disclaim the terminal part of the term of any patent granted on the instant application that would extend to the expiration date of the full statutory term of the **prior patent**, "as the term of said **prior patent** is presently shortened by any terminal disclaimer," in the event that said **prior patent** later:

expires for failure to pay a maintenance fee;
is held unenforceable;
is found invalid by a court of competent jurisdiction;
is statutorily disclaimed in whole or terminally disclaimed under 37 CFR 1.321;
has all claims canceled by a reexamination certificate;
is reissued; or
is in any manner terminated prior to the expiration of its full statutory term as presently shortened by any terminal disclaimer.

Check either box 1 or 2 below, if appropriate.

1. ☐ The undersigned is the applicant. If the applicant is an assignee, the undersigned is authorized to act on behalf of the assignee.

I hereby acknowledge that any willful false statements made are punishable under 18 U.S.C. 1001 by fine or imprisonment of not more than five (5) years, or both.

2. ☑ The undersigned is an attorney or agent of record. Reg. No. 65,160

/Matthew M. Holmes/	December 30, 2016
Signature	Date
Matthew M. Holmes	
Typed or printed name	
Attorney of Record	(385) 232-7853
Title	Telephone Number

☑ Terminal disclaimer fee under 37 CFR 1.20(d) included.

WARNING: Information on this form may become public. Credit card information should not be included on this form. Provide credit card information and authorization on PTO-2038.

This collection of information is required by 37 CFR 1.321. The information is required to obtain or retain a benefit by the public which is to file (and by the USPTO to process) an application. Confidentiality is governed by 35 U.S.C. 122 and 37 CFR 1.11 and 1.14. This collection is estimated to take 12 minutes to complete, including gathering, preparing, and submitting the completed application form to the USPTO. Time will vary depending upon the individual case. Any comments on the amount of time you require to complete this form and/or suggestions for reducing this burden, should be sent to the Chief Information Officer, U.S. Patent and Trademark Office, U.S. Department of Commerce, P.O. Box 1450, Alexandria, VA 22313-1450. DO NOT SEND FEES OR COMPLETED FORMS TO THIS ADDRESS. **SEND TO: Commissioner for Patents, P.O. Box 1450, Alexandria, VA 22313-1450.**

If you need assistance in completing the form, call 1-800-PTO-9199 and select option 2.

Privacy Act Statement

The **Privacy Act of 1974 (P.L. 93-579)** requires that you be given certain information in connection with your submission of the attached form related to a patent application or patent. Accordingly, pursuant to the requirements of the Act, please be advised that: (1) the general authority for the collection of this information is 35 U.S.C. 2(b)(2); (2) furnishing of the information solicited is voluntary; and (3) the principal purpose for which the information is used by the U.S. Patent and Trademark Office is to process and/or examine your submission related to a patent application or patent. If you do not furnish the requested information, the U.S. Patent and Trademark Office may not be able to process and/or examine your submission, which may result in termination of proceedings or abandonment of the application or expiration of the patent.

The information provided by you in this form will be subject to the following routine uses:

1. The information on this form will be treated confidentially to the extent allowed under the Freedom of Information Act (5 U.S.C. 552) and the Privacy Act (5 U.S.C 552a). Records from this system of records may be disclosed to the Department of Justice to determine whether disclosure of these records is required by the Freedom of Information Act.
2. A record from this system of records may be disclosed, as a routine use, in the course of presenting evidence to a court, magistrate, or administrative tribunal, including disclosures to opposing counsel in the course of settlement negotiations.
3. A record in this system of records may be disclosed, as a routine use, to a Member of Congress submitting a request involving an individual, to whom the record pertains, when the individual has requested assistance from the Member with respect to the subject matter of the record.
4. A record in this system of records may be disclosed, as a routine use, to a contractor of the Agency having need for the information in order to perform a contract. Recipients of information shall be required to comply with the requirements of the Privacy Act of 1974, as amended, pursuant to 5 U.S.C. 552a(m).
5. A record related to an International Application filed under the Patent Cooperation Treaty in this system of records may be disclosed, as a routine use, to the International Bureau of the World Intellectual Property Organization, pursuant to the Patent Cooperation Treaty.
6. A record in this system of records may be disclosed, as a routine use, to another federal agency for purposes of National Security review (35 U.S.C. 181) and for review pursuant to the Atomic Energy Act (42 U.S.C. 218(c)).
7. A record from this system of records may be disclosed, as a routine use, to the Administrator, General Services, or his/her designee, during an inspection of records conducted by GSA as part of that agency's responsibility to recommend improvements in records management practices and programs, under authority of 44 U.S.C. 2904 and 2906. Such disclosure shall be made in accordance with the GSA regulations governing inspection of records for this purpose, and any other relevant (*i.e.*, GSA or Commerce) directive. Such disclosure shall not be used to make determinations about individuals.
8. A record from this system of records may be disclosed, as a routine use, to the public after either publication of the application pursuant to 35 U.S.C. 122(b) or issuance of a patent pursuant to 35 U.S.C. 151. Further, a record may be disclosed, subject to the limitations of 37 CFR 1.14, as a routine use, to the public if the record was filed in an application which became abandoned or in which the proceedings were terminated and which application is referenced by either a published application, an application open to public inspection or an issued patent.
9. A record from this system of records may be disclosed, as a routine use, to a Federal, State, or local law enforcement agency, if the USPTO becomes aware of a violation or potential violation of law or regulation.

IN THE UNITED STATES
PATENT AND TRADEMARK OFFICE

FIRST INVENTOR:	David L. Brown
APPLICATION NO:	14/961,645
FILING DATE:	December 7, 2015
TITLE:	Hybrid Device Having a Personal Digital Key and Receiver-Decoder Circuit and Methods of Use
EXAMINER:	Lee, Jason T
GROUP ART UNIT:	2438
ATTY. DKT. NO:	10001-05305 US
CONFIRMATION NO:	4670

CERTIFICATE OF EFS-WEB TRANSMISSION

Pursuant to 240 OG 45 and the Legal Framework For EFS-Web, I hereby certify that this follow-on correspondence is being officially submitted through the USPTO EFS-Web system from the Mountain Time Zone of the United States on the local date shown below:

Dated: December 30, 2016 By: /Matthew M. Holmes/

Matthew M. Holmes, Reg. No. 65,160

COMMISSIONER FOR PATENTS
P.O. BOX 1450
ALEXANDRIA, VA 22313-1450

AMENDMENT A

Responsive to the Non-Final Office Action mailed on August 8, 2016, which sets a shortened statutory period for response that expires on November 8, 2016, please enter the following amendment and consider the following remarks. Additionally, a two-month extension of time is requested and the fee for which is submitted herewith.

IN THE CLAIMS

All pending claims are reproduced below.

1. (Original) A hybrid device comprising:

an integrated, secure memory storing local, secured information; and

an integrated reader-decoder circuit (RDC) for communicating wirelessly with at least one external device within a proximity zone, the integrated RDC communicatively coupled to the integrated, secure memory for communication with the integrated, secure memory,

wherein one or more of (a) the integrated RDC communicating wirelessly with the at least one external device within the proximity zone and (b) the local, secured information stored by the integrated, secure memory enables one or more of an application, a function, and a service.

2. (Original) The hybrid device of claim 1, wherein at least one of the one or more of the application, the function, and the service is enabled, at least in part, on the hybrid device.

3. (Original) The hybrid device of claim 1, wherein at least one of the one or more of the application, the function, and the service is enabled, at least in part, external to the hybrid device using an external RDC, the hybrid device communicatively coupled to wirelessly communicate with the external RDC.

4. (Original) The hybrid device of claim 1, wherein the local, secured information includes biometric information for authenticating a user.

5. (Original) The hybrid device of claim 1, wherein the local, secured information includes biometric information based on a biometric scan of a finger, the biometric information for authenticating a user.

6. (Original) The hybrid device of claim 1, wherein the local, secure information includes financial information and at least one of the one or more of the application, the function, and the service enabled completes a financial transaction based on the financial information.

7. (Original) The hybrid device of claim 1, wherein the local, secure information includes financial information and at least one of the one or more of the application, the function, and the service enabled completes a financial transaction based on a signal received from the at least one external device by the integrated RDC.

8. (Currently Amended) The hybrid device of claim 1, wherein the local, secure information includes financial information and at least one of the one or more of the application, the function, and the service enabled completes a financial transaction based on an authorization of the financial information using an external <u>authentication</u> database, the financial information transmitted to the external authentication database.

9. (Original) The hybrid device of claim 8, wherein the external authentication database is separate from a merchant providing a sale in the financial transaction.

10. (Original) The hybrid device of claim 1, wherein the one or more of the application, the function and the service enabled based on the local, secured information stored by the integrated, secure memory includes a first application, function or service based on a first

subsets of local, secured information stored by the integrated, secure memory and a second application, function or service based on a second subset of local, secured information, the first and second subset of local, secured information having different accessibility.

11. (Original) The hybrid device of claim 1, wherein the hybrid device is a cell phone.

12. (Currently Amended) The hybrid device of claim 1, wherein the at least one external device is included in jewelry.

13. (Currently Amended) The hybrid device of claim 1, wherein the at least one external device is a watch.

14. (Currently Amended) A method comprising:

creating a first wireless link between an integrated receiver-decoder circuit (RDC) of a hybrid device and an external device, the hybrid device including an integrated, secure memory and the integrated RDC, wherein the integrated, secure memory stores local, secured information;

receiving a first signal, at the integrated RDC, via the first wireless link, from the external device; and

generating an enablement signal enabling one or more of an application, a function and a service.

15. (Original) The method of claim 14, wherein at least one of the one or more of the application, the function, and the service is enabled at least in part on the hybrid device.

16. (Original) The method of claim 14 further comprising:

sending the enablement signal, wherein at least one of the one or more of the application, the function, and the service is enabled at least in part on a device external to the hybrid device and communicatively coupled to an external RDC.

17. (Original) The method of claim 14, wherein the local, secured information includes biometric information for authenticating a user.

18. (Original) The method of claim 14, wherein the local, secured information includes financial information and wherein the one or more of the application, the function and the service completes a financial transaction.

19. (Original) The method of claim 14, wherein the hybrid device is a cell phone.

20. (Original) The method of claim 14, wherein the external PDK is included in a watch.

REMARKS

Claims 1-20 were presented for examination. Claims 1-20 stand rejected in the Office Action dated August 8, 2016 (herein, "OA"). Claims 8 and 12-14 are amended. Support for the amendments may be found throughout the Applicant's specification. No new matter is added. Claims 1-20 are pending upon entry of this amendment.

Summary of Office Action

1. Claims 1-6 and 11-20 were rejected on the ground of non-statutory obviousness-type double patenting as being unpatentable over claims 1-8, 10-14, 16, 18 and 20 of U.S. patent 9,235,700, claims 1-20 of U.S. patent 9,049,188, claims 1, and 12 of US patent No. 8,171,528 B1 and claims 1 and 10 of US patent No. 8, 646,042 B1.

Response to Double Patenting Rejection

Claims 1-6 and 11-20 were rejected on the ground of non-statutory obviousness- type double patenting as being unpatentable over claims 1-8, 10-14, 16, 18 and 20 of U.S. patent 9,235,700, claims 1-20 of U.S. patent 9,049,188, claims 1, and 12 of US patent No. 8,171,528 B1 and claims 1 and 10 of US patent No. 8, 646,042 B1. An electronic terminal disclaimer is submitted with this response. Accordingly, the Applicant respectfully request the Examiner to withdraw the double patenting rejection.

CONCLUSION

Allowance of all claims is requested. If the Examiner believes that direct contact with Applicant's attorney will advance the prosecution of this case, the Examiner is encouraged to contact the undersigned as indicated below.

Respectfully submitted,
DAVID L. BROWN

Dated: December 30, 2016 By: /Matthew M. Holmes/

Matthew M. Holmes, Reg. No. 65,160
Attorney for Applicant
PATENT LAW WORKS LLP
201 South Main Street, Suite 250
Salt Lake City, UT 84111
Tel.: (385) 232-7853
Fax: (801) 355-0160
Email: mholmes@patentlawworks.net

MMH:kkt

Application Number	Application/Control No.	Applicant(s)/Patent under Reexamination
	14/961,645	BROWN, DAVID L.

Document Code - DISQ	Internal Document – DO NOT MAIL

TERMINAL DISCLAIMER	☒ APPROVED	☐ DISAPPROVED
Date Filed : 30 December, 2016	This patent is subject to a Terminal Disclaimer	

Approved/Disapproved by:

CHARRISSA BROWN

Technology Center: PLRC

Telephone: (571)272-1558

U.S. Patent and Trademark Office

Application Number	Application/Control No.	Applicant(s)/Patent under Reexamination
	14/961,645	BROWN, DAVID L.

Document Code - DISQ	Internal Document – DO NOT MAIL

TERMINAL DISCLAIMER	☐ APPROVED	☒ DISAPPROVED
Date Filed : 30 December, 2016	This patent is subject to a Terminal Disclaimer	

Approved/Disapproved by:

/CHARRISSA BROWN/

Technology Center: PLRC

Telephone: (571)272-1558

The disclaimer fee under 37 CFR 1.20(d) in the amount of $160.00 has not been submitted, nor is there any pre authorization in the application to charge to a deposit account. (See FP 14.24 and 14.26.07.)

Re-submit the TD with the required fees.

U.S. Patent and Trademark Office

PTO/SB/06 (09-11)
Approved for use through 1/31/2014. OMB 0651-0032
U.S. Patent and Trademark Office; U.S. DEPARTMENT OF COMMERCE
Under the Paperwork Reduction Act of 1995, no persons are required to respond to a collection of information unless it displays a valid OMB control number.

PATENT APPLICATION FEE DETERMINATION RECORD Substitute for Form PTO-875	Application or Docket Number 14/961,645	Filing Date 12/07/2015	☐ To be Mailed

ENTITY: ☐ LARGE ☒ SMALL ☐ MICRO

APPLICATION AS FILED – PART I

FOR	(Column 1) NUMBER FILED	(Column 2) NUMBER EXTRA	RATE ($)	FEE ($)
☐ BASIC FEE (37 CFR 1.16(a), (b), or (c))	N/A	N/A	N/A	
☐ SEARCH FEE (37 CFR 1.16(k), (i), or (m))	N/A	N/A	N/A	
☐ EXAMINATION FEE (37 CFR 1.16(o), (p), or (q))	N/A	N/A	N/A	
TOTAL CLAIMS (37 CFR 1.16(i))	minus 20 =	*	X $ =	
INDEPENDENT CLAIMS (37 CFR 1.16(h))	minus 3 =	*	X $ =	
☐ APPLICATION SIZE FEE (37 CFR 1.16(s))	If the specification and drawings exceed 100 sheets of paper, the application size fee due is $310 ($155 for small entity) for each additional 50 sheets or fraction thereof. See 35 U.S.C. 41(a)(1)(G) and 37 CFR 1.16(s).			
☐ MULTIPLE DEPENDENT CLAIM PRESENT (37 CFR 1.16(j))				
* If the difference in column 1 is less than zero, enter "0" in column 2.			TOTAL	

APPLICATION AS AMENDED – PART II

AMENDMENT

12/30/2016	(Column 1) CLAIMS REMAINING AFTER AMENDMENT		(Column 2) HIGHEST NUMBER PREVIOUSLY PAID FOR	(Column 3) PRESENT EXTRA	RATE ($)	ADDITIONAL FEE ($)
Total (37 CFR 1.16(i))	* 20	Minus	** 20	= 0	X $40 =	0
Independent (37 CFR 1.16(h))	* 2	Minus	***3	= 0	X $210 =	0
☐ Application Size Fee (37 CFR 1.16(s))						
☐ FIRST PRESENTATION OF MULTIPLE DEPENDENT CLAIM (37 CFR 1.16(j))						
					TOTAL ADD'L FEE	**0**

AMENDMENT

	(Column 1) CLAIMS REMAINING AFTER AMENDMENT		(Column 2) HIGHEST NUMBER PREVIOUSLY PAID FOR	(Column 3) PRESENT EXTRA	RATE ($)	ADDITIONAL FEE ($)
Total (37 CFR 1.16(i))	*	Minus	**	=	X $ =	
Independent (37 CFR 1.16(h))	*	Minus	***	=	X $ =	
☐ Application Size Fee (37 CFR 1.16(s))						
☐ FIRST PRESENTATION OF MULTIPLE DEPENDENT CLAIM (37 CFR 1.16(j))						
					TOTAL ADD'L FEE	

* If the entry in column 1 is less than the entry in column 2, write "0" in column 3.
** If the "Highest Number Previously Paid For" IN THIS SPACE is less than 20, enter "20".
*** If the "Highest Number Previously Paid For" IN THIS SPACE is less than 3, enter "3".
The "Highest Number Previously Paid For" (Total or Independent) is the highest number found in the appropriate box in column 1.

LIE
ERIC V. BURNS

This collection of information is required by 37 CFR 1.16. The information is required to obtain or retain a benefit by the public which is to file (and by the USPTO to process) an application. Confidentiality is governed by 35 U.S.C. 122 and 37 CFR 1.14. This collection is estimated to take 12 minutes to complete, including gathering, preparing, and submitting the completed application form to the USPTO. Time will vary depending upon the individual case. Any comments on the amount of time you require to complete this form and/or suggestions for reducing this burden, should be sent to the Chief Information Officer, U.S. Patent and Trademark Office, U.S. Department of Commerce, P.O. Box 1450, Alexandria, VA 22313-1450. DO NOT SEND FEES OR COMPLETED FORMS TO THIS ADDRESS. **SEND TO: Commissioner for Patents, P.O. Box 1450, Alexandria, VA 22313-1450.**
If you need assistance in completing the form, call 1-800-PTO-9199 and select option 2.

UNITED STATES PATENT AND TRADEMARK OFFICE

UNITED STATES DEPARTMENT OF COMMERCE
United States Patent and Trademark Office
Address: COMMISSIONER FOR PATENTS
P.O. Box 1450
Alexandria, Virginia 22313-1450
www.uspto.gov

NOTICE OF ALLOWANCE AND FEE(S) DUE

89194 7590 02/07/2017
Patent Law Works/Proxense
Greg Sueoka
201 South Main Street, Suite 250
Salt Lake City, UT 84111

EXAMINER
LEE, JASON T

ART UNIT	PAPER NUMBER
2438	

DATE MAILED: 02/07/2017

APPLICATION NO.	FILING DATE	FIRST NAMED INVENTOR	ATTORNEY DOCKET NO.	CONFIRMATION NO.
14/961,645	12/07/2015	David L. Brown	10001-05305 US	4670

TITLE OF INVENTION: Hybrid Device Having a Personal Digital Key and Receiver-Decoder Circuit and Methods of Use

APPLN. TYPE	ENTITY STATUS	ISSUE FEE DUE	PUBLICATION FEE DUE	PREV. PAID ISSUE FEE	TOTAL FEE(S) DUE	DATE DUE
nonprovisional	SMALL	$480	$0	$0	$480	05/08/2017

THE APPLICATION IDENTIFIED ABOVE HAS BEEN EXAMINED AND IS ALLOWED FOR ISSUANCE AS A PATENT. PROSECUTION ON THE MERITS IS CLOSED. THIS NOTICE OF ALLOWANCE IS NOT A GRANT OF PATENT RIGHTS. THIS APPLICATION IS SUBJECT TO WITHDRAWAL FROM ISSUE AT THE INITIATIVE OF THE OFFICE OR UPON PETITION BY THE APPLICANT. SEE 37 CFR 1.313 AND MPEP 1308.

THE ISSUE FEE AND PUBLICATION FEE (IF REQUIRED) MUST BE PAID WITHIN THREE MONTHS FROM THE MAILING DATE OF THIS NOTICE OR THIS APPLICATION SHALL BE REGARDED AS ABANDONED. THIS STATUTORY PERIOD CANNOT BE EXTENDED. SEE 35 U.S.C. 151. THE ISSUE FEE DUE INDICATED ABOVE DOES NOT REFLECT A CREDIT FOR ANY PREVIOUSLY PAID ISSUE FEE IN THIS APPLICATION. IF AN ISSUE FEE HAS PREVIOUSLY BEEN PAID IN THIS APPLICATION (AS SHOWN ABOVE), THE RETURN OF PART B OF THIS FORM WILL BE CONSIDERED A REQUEST TO REAPPLY THE PREVIOUSLY PAID ISSUE FEE TOWARD THE ISSUE FEE NOW DUE.

HOW TO REPLY TO THIS NOTICE:

I. Review the ENTITY STATUS shown above. If the ENTITY STATUS is shown as SMALL or MICRO, verify whether entitlement to that entity status still applies.

If the ENTITY STATUS is the same as shown above, pay the TOTAL FEE(S) DUE shown above.

If the ENTITY STATUS is changed from that shown above, on PART B - FEE(S) TRANSMITTAL, complete section number 5 titled "Change in Entity Status (from status indicated above)".

For purposes of this notice, small entity fees are 1/2 the amount of undiscounted fees, and micro entity fees are 1/2 the amount of small entity fees.

II. PART B - FEE(S) TRANSMITTAL, or its equivalent, must be completed and returned to the United States Patent and Trademark Office (USPTO) with your ISSUE FEE and PUBLICATION FEE (if required). If you are charging the fee(s) to your deposit account, section "4b" of Part B - Fee(s) Transmittal should be completed and an extra copy of the form should be submitted. If an equivalent of Part B is filed, a request to reapply a previously paid issue fee must be clearly made, and delays in processing may occur due to the difficulty in recognizing the paper as an equivalent of Part B.

III. All communications regarding this application must give the application number. Please direct all communications prior to issuance to Mail Stop ISSUE FEE unless advised to the contrary.

IMPORTANT REMINDER: Utility patents issuing on applications filed on or after Dec. 12, 1980 may require payment of maintenance fees. It is patentee's responsibility to ensure timely payment of maintenance fees when due.

PART B - FEE(S) TRANSMITTAL

Complete and send this form, together with applicable fee(s), to: Mail **Mail Stop ISSUE FEE**
Commissioner for Patents
P.O. Box 1450
Alexandria, Virginia 22313-1450
or Fax (571)-273-2885

INSTRUCTIONS: This form should be used for transmitting the ISSUE FEE and PUBLICATION FEE (if required). Blocks 1 through 5 should be completed where appropriate. All further correspondence including the Patent, advance orders and notification of maintenance fees will be mailed to the current correspondence address as indicated unless corrected below or directed otherwise in Block 1, by (a) specifying a new correspondence address; and/or (b) indicating a separate "FEE ADDRESS" for maintenance fee notifications.

CURRENT CORRESPONDENCE ADDRESS (Note: Use Block 1 for any change of address)

89194 7590 02/07/2017
Patent Law Works/Proxense
Greg Sueoka
201 South Main Street, Suite 250
Salt Lake City, UT 84111

Note: A certificate of mailing can only be used for domestic mailings of the Fee(s) Transmittal. This certificate cannot be used for any other accompanying papers. Each additional paper, such as an assignment or formal drawing, must have its own certificate of mailing or transmission.

Certificate of Mailing or Transmission
I hereby certify that this Fee(s) Transmittal is being deposited with the United States Postal Service with sufficient postage for first class mail in an envelope addressed to the Mail Stop ISSUE FEE address above, or being facsimile transmitted to the USPTO (571) 273-2885, on the date indicated below.

(Depositor's name)
(Signature)
(Date)

APPLICATION NO.	FILING DATE	FIRST NAMED INVENTOR	ATTORNEY DOCKET NO.	CONFIRMATION NO.
14/961,645	12/07/2015	David L. Brown	10001-05305 US	4670

TITLE OF INVENTION: Hybrid Device Having a Personal Digital Key and Receiver-Decoder Circuit and Methods of Use

APPLN. TYPE	ENTITY STATUS	ISSUE FEE DUE	PUBLICATION FEE DUE	PREV. PAID ISSUE FEE	TOTAL FEE(S) DUE	DATE DUE
nonprovisional	SMALL	$480	$0	$0	$480	05/08/2017

EXAMINER	ART UNIT	CLASS-SUBCLASS
LEE, JASON T	2438	726-003000

1. Change of correspondence address or indication of "Fee Address" (37 CFR 1.363).
- ❑ Change of correspondence address (or Change of Correspondence Address form PTO/SB/122) attached.
- ❑ "Fee Address" indication (or "Fee Address" Indication form PTO/SB/47; Rev 03-02 or more recent) attached. **Use of a Customer Number is required.**

2. For printing on the patent front page, list
(1) The names of up to 3 registered patent attorneys or agents OR, alternatively,
(2) The name of a single firm (having as a member a registered attorney or agent) and the names of up to 2 registered patent attorneys or agents. If no name is listed, no name will be printed.

1_____
2_____
3_____

3. ASSIGNEE NAME AND RESIDENCE DATA TO BE PRINTED ON THE PATENT (print or type)

PLEASE NOTE: Unless an assignee is identified below, no assignee data will appear on the patent. If an assignee is identified below, the document has been filed for recordation as set forth in 37 CFR 3.11. Completion of this form is NOT a substitute for filing an assignment.

(A) NAME OF ASSIGNEE (B) RESIDENCE: (CITY and STATE OR COUNTRY)

Please check the appropriate assignee category or categories (will not be printed on the patent) : ❑ Individual ❑ Corporation or other private group entity ❑ Government

4a. The following fee(s) are submitted:
- ❑ Issue Fee
- ❑ Publication Fee (No small entity discount permitted)
- ❑ Advance Order - # of Copies _____

4b. Payment of Fee(s): (**Please first reapply any previously paid issue fee shown above**)
- ❑ A check is enclosed.
- ❑ Payment by credit card. Form PTO-2038 is attached.
- ❑ The director is hereby authorized to charge the required fee(s), any deficiency, or credits any overpayment, to Deposit Account Number _____ (enclose an extra copy of this form).

5. **Change in Entity Status** (from status indicated above)
- ❑ Applicant certifying micro entity status. See 37 CFR 1.29 — NOTE: Absent a valid certification of Micro Entity Status (see forms PTO/SB/15A and 15B), issue fee payment in the micro entity amount will not be accepted at the risk of application abandonment.
- ❑ Applicant asserting small entity status. See 37 CFR 1.27 — NOTE: If the application was previously under micro entity status, checking this box will be taken to be a notification of loss of entitlement to micro entity status.
- ❑ Applicant changing to regular undiscounted fee status. — NOTE: Checking this box will be taken to be a notification of loss of entitlement to small or micro entity status, as applicable.

NOTE: This form must be signed in accordance with 37 CFR 1.31 and 1.33. See 37 CFR 1.4 for signature requirements and certifications.

Authorized Signature _____ Date _____

Typed or printed name _____ Registration No. _____

UNITED STATES PATENT AND TRADEMARK OFFICE

UNITED STATES DEPARTMENT OF COMMERCE
United States Patent and Trademark Office
Address: COMMISSIONER FOR PATENTS
P.O. Box 1450
Alexandria, Virginia 22313-1450
www.uspto.gov

APPLICATION NO.	FILING DATE	FIRST NAMED INVENTOR	ATTORNEY DOCKET NO.	CONFIRMATION NO.
14/961,645	12/07/2015	David L. Brown	10001-05305 US	4670

89194 7590 02/07/2017
Patent Law Works/Proxense
Greg Sueoka
201 South Main Street, Suite 250
Salt Lake City, UT 84111

EXAMINER
LEE, JASON T

ART UNIT	PAPER NUMBER
2438	

DATE MAILED: 02/07/2017

Determination of Patent Term Adjustment under 35 U.S.C. 154 (b)
(Applications filed on or after May 29, 2000)

The Office has discontinued providing a Patent Term Adjustment (PTA) calculation with the Notice of Allowance.

Section 1(h)(2) of the AIA Technical Corrections Act amended 35 U.S.C. 154(b)(3)(B)(i) to eliminate the requirement that the Office provide a patent term adjustment determination with the notice of allowance. See Revisions to Patent Term Adjustment, 78 Fed. Reg. 19416, 19417 (Apr. 1, 2013). Therefore, the Office is no longer providing an initial patent term adjustment determination with the notice of allowance. The Office will continue to provide a patent term adjustment determination with the Issue Notification Letter that is mailed to applicant approximately three weeks prior to the issue date of the patent, and will include the patent term adjustment on the patent. Any request for reconsideration of the patent term adjustment determination (or reinstatement of patent term adjustment) should follow the process outlined in 37 CFR 1.705.

Any questions regarding the Patent Term Extension or Adjustment determination should be directed to the Office of Patent Legal Administration at (571)-272-7702. Questions relating to issue and publication fee payments should be directed to the Customer Service Center of the Office of Patent Publication at 1-(888)-786-0101 or (571)-272-4200.

OMB Clearance and PRA Burden Statement for PTOL-85 Part B

The Paperwork Reduction Act (PRA) of 1995 requires Federal agencies to obtain Office of Management and Budget approval before requesting most types of information from the public. When OMB approves an agency request to collect information from the public, OMB (i) provides a valid OMB Control Number and expiration date for the agency to display on the instrument that will be used to collect the information and (ii) requires the agency to inform the public about the OMB Control Number's legal significance in accordance with 5 CFR 1320.5(b).

The information collected by PTOL-85 Part B is required by 37 CFR 1.311. The information is required to obtain or retain a benefit by the public which is to file (and by the USPTO to process) an application. Confidentiality is governed by 35 U.S.C. 122 and 37 CFR 1.14. This collection is estimated to take 12 minutes to complete, including gathering, preparing, and submitting the completed application form to the USPTO. Time will vary depending upon the individual case. Any comments on the amount of time you require to complete this form and/or suggestions for reducing this burden, should be sent to the Chief Information Officer, U.S. Patent and Trademark Office, U.S. Department of Commerce, P.O. Box 1450, Alexandria, Virginia 22313-1450. DO NOT SEND FEES OR COMPLETED FORMS TO THIS ADDRESS. SEND TO: Commissioner for Patents, P.O. Box 1450, Alexandria, Virginia 22313-1450. Under the Paperwork Reduction Act of 1995, no persons are required to respond to a collection of information unless it displays a valid OMB control number.

Privacy Act Statement

The Privacy Act of 1974 (P.L. 93-579) requires that you be given certain information in connection with your submission of the attached form related to a patent application or patent. Accordingly, pursuant to the requirements of the Act, please be advised that: (1) the general authority for the collection of this information is 35 U.S.C. 2(b)(2); (2) furnishing of the information solicited is voluntary; and (3) the principal purpose for which the information is used by the U.S. Patent and Trademark Office is to process and/or examine your submission related to a patent application or patent. If you do not furnish the requested information, the U.S. Patent and Trademark Office may not be able to process and/or examine your submission, which may result in termination of proceedings or abandonment of the application or expiration of the patent.

The information provided by you in this form will be subject to the following routine uses:

1. The information on this form will be treated confidentially to the extent allowed under the Freedom of Information Act (5 U.S.C. 552) and the Privacy Act (5 U.S.C 552a). Records from this system of records may be disclosed to the Department of Justice to determine whether disclosure of these records is required by the Freedom of Information Act.
2. A record from this system of records may be disclosed, as a routine use, in the course of presenting evidence to a court, magistrate, or administrative tribunal, including disclosures to opposing counsel in the course of settlement negotiations.
3. A record in this system of records may be disclosed, as a routine use, to a Member of Congress submitting a request involving an individual, to whom the record pertains, when the individual has requested assistance from the Member with respect to the subject matter of the record.
4. A record in this system of records may be disclosed, as a routine use, to a contractor of the Agency having need for the information in order to perform a contract. Recipients of information shall be required to comply with the requirements of the Privacy Act of 1974, as amended, pursuant to 5 U.S.C. 552a(m).
5. A record related to an International Application filed under the Patent Cooperation Treaty in this system of records may be disclosed, as a routine use, to the International Bureau of the World Intellectual Property Organization, pursuant to the Patent Cooperation Treaty.
6. A record in this system of records may be disclosed, as a routine use, to another federal agency for purposes of National Security review (35 U.S.C. 181) and for review pursuant to the Atomic Energy Act (42 U.S.C. 218(c)).
7. A record from this system of records may be disclosed, as a routine use, to the Administrator, General Services, or his/her designee, during an inspection of records conducted by GSA as part of that agency's responsibility to recommend improvements in records management practices and programs, under authority of 44 U.S.C. 2904 and 2906. Such disclosure shall be made in accordance with the GSA regulations governing inspection of records for this purpose, and any other relevant (i.e., GSA or Commerce) directive. Such disclosure shall not be used to make determinations about individuals.
8. A record from this system of records may be disclosed, as a routine use, to the public after either publication of the application pursuant to 35 U.S.C. 122(b) or issuance of a patent pursuant to 35 U.S.C. 151. Further, a record may be disclosed, subject to the limitations of 37 CFR 1.14, as a routine use, to the public if the record was filed in an application which became abandoned or in which the proceedings were terminated and which application is referenced by either a published application, an application open to public inspection or an issued patent.
9. A record from this system of records may be disclosed, as a routine use, to a Federal, State, or local law enforcement agency, if the USPTO becomes aware of a violation or potential violation of law or regulation.

Notice of Allowability	Application No. 14/961,645	Applicant(s) BROWN, DAVID L.	
	Examiner JASON LEE	Art Unit 2438	AIA (First Inventor to File) Status No

-- The MAILING DATE of this communication appears on the cover sheet with the correspondence address--

All claims being allowable, PROSECUTION ON THE MERITS IS (OR REMAINS) CLOSED in this application. If not included herewith (or previously mailed), a Notice of Allowance (PTOL-85) or other appropriate communication will be mailed in due course. **THIS NOTICE OF ALLOWABILITY IS NOT A GRANT OF PATENT RIGHTS.** This application is subject to withdrawal from issue at the initiative of the Office or upon petition by the applicant. See 37 CFR 1.313 and MPEP 1308.

1. ☒ This communication is responsive to *12/30/16*.
   ☐ A declaration(s)/affidavit(s) under **37 CFR 1.130(b)** was/were filed on_____.
2. ☐ An election was made by the applicant in response to a restriction requirement set forth during the interview on _____; the restriction requirement and election have been incorporated into this action.
3. ☒ The allowed claim(s) is/are *1-20*. As a result of the allowed claim(s), you may be eligible to benefit from the **Patent Prosecution Highway** program at a participating intellectual property office for the corresponding application. For more information, please see http://www.uspto.gov/patents/init_events/pph/index.jsp or send an inquiry to PPHfeedback@uspto.gov.
4. ☐ Acknowledgment is made of a claim for foreign priority under 35 U.S.C. § 119(a)-(d) or (f).

   Certified copies:

   a) ☐ All b) ☐ Some *c) ☐ None of the:
   1. ☐ Certified copies of the priority documents have been received.
   2. ☐ Certified copies of the priority documents have been received in Application No. _____ .
   3. ☐ Copies of the certified copies of the priority documents have been received in this national stage application from the International Bureau (PCT Rule 17.2(a)).

   * Certified copies not received: _____.

Applicant has THREE MONTHS FROM THE "MAILING DATE" of this communication to file a reply complying with the requirements noted below. Failure to timely comply will result in ABANDONMENT of this application.
THIS THREE-MONTH PERIOD IS NOT EXTENDABLE.

5. ☐ CORRECTED DRAWINGS (as "replacement sheets") must be submitted.
   ☐ including changes required by the attached Examiner's Amendment / Comment or in the Office action of Paper No./Mail Date _____.

   Identifying indicia such as the application number (see 37 CFR 1.84(c)) should be written on the drawings in the front (not the back) of each sheet. Replacement sheet(s) should be labeled as such in the header according to 37 CFR 1.121(d).
6. ☐ DEPOSIT OF and/or INFORMATION about the deposit of BIOLOGICAL MATERIAL must be submitted. Note the attached Examiner's comment regarding REQUIREMENT FOR THE DEPOSIT OF BIOLOGICAL MATERIAL.

Attachment(s)

1. ☒ Notice of References Cited (PTO-892)
2. ☒ Information Disclosure Statements (PTO/SB/08), Paper No./Mail Date 12/12/16
3. ☐ Examiner's Comment Regarding Requirement for Deposit of Biological Material
4. ☐ Interview Summary (PTO-413), Paper No./Mail Date _____ .
5. ☐ Examiner's Amendment/Comment
6. ☒ Examiner's Statement of Reasons for Allowance
7. ☐ Other _____.

/JASON LEE/
Primary Examiner, Art Unit 2438

DETAILED ACTION

1. The text of those sections of Title 35 U.S. Code not included in this section can be found in the prior office action.

2. The prior office actions are incorporated herein by reference. In particular, the observations with respect to claim language, and response to previously presented arguments.

3. Applicant filed the response on December 30, 2016 for the office action dated August 08, 2016. No claim is cancelled. No claim is added. Claims 8 and 12-14 are amended. Claims 1-20 are pending.

Terminal Disclaimer

4. The terminal disclaimer filed on 12/30/2016 disclaiming the terminal portion of any patent granted on this application which would extend beyond the expiration date of U.S. patent 9,235,700, U.S. patent 9,049,188, US patent No. 8,171,528 B1 and US patent No. 8, 646,042 B1 have been reviewed and is approved on 12/30/2016. The terminal disclaimer has been recorded.

Information Disclosure Statement

5. The information disclosure statement (IDS) submitted on 12/12/2016 has been considered. The submission is in compliance with the provisions of 37 CFR 1.97. Form PTO-1449 is signed and attached hereto.

Response to Arguments

6. Applicant's filed Terminal disclaimer on 12/30/2016 disclaiming the terminal portion of any patent granted on this application which would extend beyond the expiration date of

U.S. patent 9,235,700, U.S. patent 9,049,188, US patent No. 8,171,528 B1 and US patent No. 8, 646,042 B1 and is approved on 12/30/2016. Therefore, double patenting rejections for the previous office action have been withdrawn.

Allowable Subject Matter

7. Independent claims 1 and 14 are allowed over prior art of record. Dependent claims 2-13 and 15-20 depend on the above-mentioned independent claims 1 and 14 are allowed by virtue of its dependency.

Examiner's statement of reasons for allowance

8. The following is an examiner's statement of reasons for allowance:

Independent claim 1 is allowed in view of the prior art and terminal disclaimer filed 12/30/2016.

Relevant prior art of Finn et al (US 2006/0208066 A1), in view of Hochstein et al (US 2006/0113381 A1) fails to teach alone, or in combination, at the time of the invention, the claimed features and limitations. None of the prior art of record teaches or made obvious the feature of "an integrated reader-decoder circuit (RDC) for communicating wirelessly with at least one external device within a proximity zone, the integrated RDC communicatively coupled to the integrated, secure memory for communication with the integrated, secure memory"; "wherein one or more of (a) the integrated RDC communicating wirelessly with the at least one external device within the proximity zone and (b) the local, secured information stored by the integrated, secure memory enables one or more of an application, a function, and a service" as recited in the manner of claim 1.

None of the prior art of record, either taken by itself or in any combination, would have anticipated or made obvious the invention of the present application at or before the time it was filed. Therefore, claim 1 is considered to be allowable.

Independent claim 14 recites similar limitations to those found in claim 1. Therefore, claim 14 is considered to be allowable for the same reasons as discussed with claim 1 above.

Examiner performed updated search and additional search does not yield other specific references that reasonably, either singularly or in combination with cited references, would result a proper rejection that would have anticipated or made obvious all the steps disclosed in the independent claims 1 and 11 with proper motivation at or before the time it was effectively filed.

Dependent claims 2-13 and 15-20 depend upon the above-mentioned allowed claims 1 and 14 are therefore allowed by virtue of its dependency.

None of the prior art of record, either taken by itself or in any combination, would have anticipated or made obvious the invention of the present application at or before the time it was filed.

Any comments considered necessary by applicant must be submitted no later than payment of the issue fee and, to avoid processing delays, should preferably accompany the issue fee. Such submissions should be clearly labeled “Comments on Statement of Reasons for Allowance."

Conclusion

The prior art made of record and not relied upon is considered pertinent to applicant's disclosure.

a. US 20070271194; Walker et al; "Products and Processes for Providing Offers for Products Dispensed from a Dispensing Device" discloses "hard-wired circuitry or custom hardware may be used with wireless personal digital assistants (PDAs), for authentication user."

Any inquiry concerning this communication or earlier communications from the examiner should be directed to JASON LEE whose telephone number is (571)270-7477. The examiner can normally be reached on Monday-Friday 9/5/4 (altering Friday off).

If attempts to reach the examiner by telephone are unsuccessful, the examiner's supervisor, Taghi T Arani can be reached on (571)272-3787. The fax phone number for the organization where this application or proceeding is assigned is 571-273-8300.

Information regarding the status of an application may be obtained from the Patent Application Information Retrieval (PAIR) system. Status information for published applications may be obtained from either Private PAIR or Public PAIR. Status information for unpublished applications is available through Private PAIR only. For more information about the PAIR system, see http://pair-direct.uspto.gov. Should you have questions on access to the Private PAIR system, contact the Electronic Business Center (EBC) at 866-217-9197 (toll-free). If you would like assistance from a USPTO Customer Service Representative or access to the automated information system, call 800-786-9199 (IN USA OR CANADA) or 571-272-1000.

/JASON LEE/

Primary Examiner, Art Unit 2438

Notice of References Cited	Application/Control No. 14/961,645	Applicant(s)/Patent Under Reexamination BROWN, DAVID L.	
	Examiner JASON LEE	Art Unit 2438	Page 1 of 1

U.S. PATENT DOCUMENTS

*		Document Number Country Code-Number-Kind Code	Date MM-YYYY	Name	CPC Classification	US Classification
*	A	US-2007/0271194 A1	11-2007	Walker; Jay S.	G06Q30/02	705/80
	B	US-				
	C	US-				
	D	US-				
	E	US-				
	F	US-				
	G	US-				
	H	US-				
	I	US-				
	J	US-				
	K	US-				
	L	US-				
	M	US-				

FOREIGN PATENT DOCUMENTS

*		Document Number Country Code-Number-Kind Code	Date MM-YYYY	Country	Name	CPC Classification
	N					
	O					
	P					
	Q					
	R					
	S					
	T					

NON-PATENT DOCUMENTS

*		Include as applicable: Author, Title Date, Publisher, Edition or Volume, Pertinent Pages)
	U	
	V	
	W	
	X	

*A copy of this reference is not being furnished with this Office action. (See MPEP § 707.05(a).)
Dates in MM-YYYY format are publication dates. Classifications may be US or foreign.

Doc code: IDS
Doc description: Information Disclosure Statement (IDS) Filed

PTO/SB/08a (03-15)
Approved for use through 07/31/2016. OMB 0651-0031
U.S. Patent and Trademark Office; U.S. DEPARTMENT OF COMMERCE
Under the Paperwork Reduction Act of 1995, no persons are required to respond to a collection of information unless it contains a valid OMB control number.

INFORMATION DISCLOSURE STATEMENT BY APPLICANT (Not for submission under 37 CFR 1.99)		
	Application Number	14961645
	Filing Date	2015-12-07
	First Named Inventor	David L. Brown
	Art Unit	2438
	Examiner Name	Jason T. Lee
	Attorney Docket Number	10001-05305 US

U.S.PATENTS Remove

Examiner Initial*	Cite No	Patent Number	Kind Code[1]	Issue Date	Name of Patentee or Applicant of cited Document	Pages,Columns,Lines where Relevant Passages or Relevant Figures Appear
/J.T.L/	1	5623552		1997-04-22	Lane	
/J.T.L/	2	6728397		2004-04-27	McNeal	
/J.T.L/	3	6879966		2005-04-12	Lapsley et al.	
/J.T.L/	4	7159765		2007-01-09	Frerking	
/J.T.L/	5	7231068		2007-06-12	Tibor	
/J.T.L/	6	7349557		2008-03-25	Tibor	
/J.T.L/	7	7565329		2009-07-21	Lapsley et al.	
/J.T.L/	8	8678273		2014-03-25	McNeal	

If you wish to add additional U.S. Patent citation information please click the Add button. Add

ALL REFERENCES CONSIDERED EXCEPT WHERE LINED THROUGH. /J.T.L/

INFORMATION DISCLOSURE STATEMENT BY APPLICANT

(Not for submission under 37 CFR 1.99)

Application Number	14961645
Filing Date	2015-12-07
First Named Inventor	David L. Brown
Art Unit	2438
Examiner Name	Jason T. Lee
Attorney Docket Number	10001-05305 US

U.S.PATENT APPLICATION PUBLICATIONS Remove

Examiner Initial*	Cite No	Publication Number	Kind Code[1]	Publication Date	Name of Patentee or Applicant of cited Document	Pages,Columns,Lines where Relevant Passages or Relevant Figures Appear
/J.T.L/	1	20050116020		2005-06-02	Smolucha et al.	
/J.T.L/	2	20070271194		2007-11-22	Walker et al.	

If you wish to add additional U.S. Published Application citation information please click the Add button. Add

FOREIGN PATENT DOCUMENTS Remove

Examiner Initial*	Cite No	Foreign Document Number[3]	Country Code[2] i	Kind Code[4]	Publication Date	Name of Patentee or Applicant of cited Document	Pages,Columns,Lines where Relevant Passages or Relevant Figures Appear	T[5]
	1							

If you wish to add additional Foreign Patent Document citation information please click the Add button Add

NON-PATENT LITERATURE DOCUMENTS Remove

Examiner Initials*	Cite No	Include name of the author (in CAPITAL LETTERS), title of the article (when appropriate), title of the item (book, magazine, journal, serial, symposium, catalog, etc), date, pages(s), volume-issue number(s), publisher, city and/or country where published.	T[5]
	1		

If you wish to add additional non-patent literature document citation information please click the Add button Add

EXAMINER SIGNATURE

Examiner Signature	/JASON T LEE/	Date Considered	01/24/2017

*EXAMINER: Initial if reference considered, whether or not citation is in conformance with MPEP 609. Draw line through a citation if not in conformance and not considered. Include copy of this form with next communication to applicant.

EFS Web 2.1.17

ALL REFERENCES CONSIDERED EXCEPT WHERE LINED THROUGH. /J.T.L/

Search Notes	Application/Control No.	Applicant(s)/Patent Under Reexamination
	14961645	BROWN, DAVID L.
	Examiner	**Art Unit**
	JASON LEE	2438

CPC- SEARCHED		
Symbol	**Date**	**Examiner**

CPC COMBINATION SETS - SEARCHED		
Symbol	**Date**	**Examiner**

US CLASSIFICATION SEARCHED			
Class	**Subclass**	**Date**	**Examiner**
726	3	8/2/16	JL

SEARCH NOTES		
Search Notes	**Date**	**Examiner**
EAST searched, google searched	8/2/16	JL
DP searched	8/2/16	JL

INTERFERENCE SEARCH			
US Class/ CPC Symbol	**US Subclass / CPC Group**	**Date**	**Examiner**
726	3	1/24/17	JL
	(integrated personal digital key) with (proximity zone) same (receiver-decoder circuit) and (application or function or service).clm.	1/24/17	JL

Index of Claims	Application/Control No.	Applicant(s)/Patent Under Reexamination
	14961645	BROWN, DAVID L.
	Examiner	**Art Unit**
	JASON LEE	2438

✓	Rejected	-	Cancelled	N	Non-Elected	A	Appeal
=	Allowed	÷	Restricted	I	Interference	O	Objected

☐ Claims renumbered in the same order as presented by applicant ☐ CPA ☒ T.D. ☐ R.1.47

CLAIM		DATE								
Final	Original	08/02/2016	01/24/2017							
1	1	✓	=							
2	2	✓	=							
3	3	✓	=							
4	4	✓	=							
5	5	✓	=							
6	6	✓	=							
7	7	✓	=							
8	8	✓	=							
9	9	✓	=							
10	10	✓	=							
11	11	✓	=							
12	12	✓	=							
13	13	✓	=							
14	14	✓	=							
15	15	✓	=							
16	16	✓	=							
17	17	✓	=							
18	18	✓	=							
19	19	✓	=							
20	20	✓	=							

EAST Search History

EAST Search History (Prior Art)

Ref #	Hits	Search Query	DBs	Default Operator	Plurals	Time Stamp
S1	2	"8171528".pn.	US-PGPUB; USPAT; USOCR; FPRS; EPO; JPO; DERWENT; IBM_TDB	ADJ	ON	2014/09/16 18:18
S2	2	"8646942".pn.	US-PGPUB; USPAT; USOCR; FPRS; EPO; JPO; DERWENT; IBM_TDB	ADJ	ON	2014/09/16 18:19
S3	2	"8646042".pn.	US-PGPUB; USPAT; USOCR; FPRS; EPO; JPO; DERWENT; IBM_TDB	ADJ	ON	2014/09/16 18:19
S4	2	"20060208066".pn.	US-PGPUB; USPAT; USOCR; FPRS; EPO; JPO; DERWENT; IBM_TDB	ADJ	ON	2014/09/16 19:50
S5	3	"20060113381".pn.	US-PGPUB; USPAT; USOCR; FPRS; EPO; JPO; DERWENT; IBM_TDB	ADJ	ON	2014/09/17 11:43
S6	2	"20060208066".pn. and signal	US-PGPUB; USPAT; USOCR; FPRS; EPO; JPO; DERWENT; IBM_TDB	ADJ	ON	2014/09/17 12:37
S7	2	"20070271194".pn.	US-PGPUB; USPAT; USOCR; FPRS; EPO; JPO; DERWENT; IBM_TDB	ADJ	ON	2015/01/09 13:00
S8	0	(integrated personal digital key) with (biometric information) with (receiver-decoder circuit)	US-PGPUB; USPAT; USOCR; FPRS; EPO; JPO; DERWENT; IBM_TDB	ADJ	ON	2015/01/09 13:15
S9	0	(integrated personal digital key) with (biometric information)	US-PGPUB; USPAT; USOCR; FPRS; EPO; JPO; DERWENT; IBM_TDB	ADJ	ON	2015/01/09 13:15
S10	0	(integrated key) with (biometric information)	US-PGPUB; USPAT; USOCR; FPRS; EPO; JPO; DERWENT; IBM_TDB	ADJ	ON	2015/01/09 13:15
S11	5	(integrated key) with (biometric)	US-PGPUB; USPAT; USOCR; FPRS; EPO; JPO; DERWENT; IBM_TDB	ADJ	ON	2015/01/09 13:16
S12	0	((integrated key) with (biometric)) same (decoder circuit)	US-PGPUB; USPAT; USOCR; FPRS; EPO; JPO; DERWENT; IBM_TDB	ADJ	ON	2015/01/09 13:17

S17	1	"9049188".pn.	US-PGPUB; USPAT; USOCR; FPRS; EPO; JPO; DERWENT; IBM_TDB	ADJ	ON	2015/05/23 15:07
S20	2	"9235700".pn.	US-PGPUB; USPAT; USOCR; FPRS; EPO; JPO; DERWENT; IBM_TDB	ADJ	ON	2016/08/02 14:41
S21	3	"9049188".pn.	US-PGPUB; USPAT; USOCR; FPRS; EPO; JPO; DERWENT; IBM_TDB	ADJ	ON	2016/08/02 15:10

EAST Search History (Interference)

Ref #	Hits	Search Query	DBs	Default Operator	Plurals	Time Stamp
L1	0	(integrated personal digital key) with (proximity zone) same (receiver-decoder circuit) and (application or function or service).clm.	US-PGPUB; USPAT	ADJ	ON	2017/01/24 15:51
S13	0	(integrated personal digital key) with (biometric information) with (receiver-decoder circuit).clm.	US-PGPUB; USPAT	ADJ	ON	2015/01/09 13:13
S14	0	(integrated personal digital key) with (biometric information) same (receiver-decoder circuit) and (application or function or service).clm.	US-PGPUB; USPAT	ADJ	ON	2015/01/09 13:14
S15	0	(integrated personal digital key) with (biometric information) with (receiver-decoder circuit)	US-PGPUB; USPAT	ADJ	ON	2015/01/09 13:15
S16	0	(integrated personal digital key) with (biometric information) with (receiver-decoder circuit).clm.	US-PGPUB; USPAT	ADJ	ON	2015/01/09 13:18
S18	0	(integrated personal digital key) with (financial information) with (receiver-decoder circuit).clm.	US-PGPUB; USPAT	ADJ	ON	2015/09/01 15:46
S19	0	(integrated personal digital key) with (financial information) same (receiver-decoder circuit) and (application or function or service).clm.	US-PGPUB; USPAT	ADJ	ON	2015/09/01 15:47

1/24/2017 3:52:04 PM
C:\Users\jlee16\Documents\EAST\Workspaces\14961645-080216.wsp

Issue Classification	Application/Control No.	Applicant(s)/Patent Under Reexamination
	14961645	BROWN, DAVID L.
	Examiner	**Art Unit**
	JASON LEE	2438

CPC

Symbol					Type	Version
G06Q		20	/	363	F	2013-01-01
H04L		63	/	0861	I	2013-01-01
H04W		12	/	04	I	2013-01-01
H04W		12	/	08	I	2013-01-01
G06F		21	/	32	I	2013-01-01
G06F		21	/	35	I	2013-01-01
H04L		63	/	0492	I	2013-01-01
H04L		63	/	10	I	2013-01-01
G06Q		20	/	40145	I	2013-01-01
H04W		88	/	02	I	2013-01-01
			/			
			/			
			/			
			/			
			/			

CPC Combination Sets

Symbol					Type	Set	Ranking	Version
			/					
			/					

NONE (Assistant Examiner)	(Date)	**Total Claims Allowed:** 20	
/JASON LEE/ Primary Examiner.Art Unit 2438 (Primary Examiner)	01/24/2017 (Date)	O.G. Print Claim(s) 1	O.G. Print Figure 1

Issue Classification	Application/Control No.	Applicant(s)/Patent Under Reexamination
	14961645	BROWN, DAVID L.
	Examiner	**Art Unit**
	JASON LEE	2438

US ORIGINAL CLASSIFICATION		INTERNATIONAL CLASSIFICATION	
CLASS	SUBCLASS	CLAIMED	NON-CLAIMED
726	3	H 0 4 L 29 / 06 (2006.01.01)	

CROSS REFERENCE(S)					
CLASS	SUBCLASS (ONE SUBCLASS PER BLOCK)				

NONE (Assistant Examiner) (Date)		Total Claims Allowed: 20	
/JASON LEE/ Primary Examiner.Art Unit 2438 (Primary Examiner)	01/24/2017 (Date)	O.G. Print Claim(s) 1	O.G. Print Figure 1

U.S. Patent and Trademark Office

Part of Paper No. 20170124

Issue Classification	Application/Control No.	Applicant(s)/Patent Under Reexamination
	14961645	BROWN, DAVID L.
	Examiner	**Art Unit**
	JASON LEE	2438

☐ Claims renumbered in the same order as presented by applicant ☐ CPA ☒ T.D. ☐ R.1.47

Final	Original	Final	Original	Final	Original	Final	Original	Final	Original	Final	Original	Final	Original	Final	Original
1	1	17	17												
2	2	18	18												
3	3	19	19												
4	4	20	20												
5	5														
6	6														
7	7														
8	8														
9	9														
10	10														
11	11														
12	12														
13	13														
14	14														
15	15														
16	16														

NONE (Assistant Examiner)	(Date)	**Total Claims Allowed:** 20	
/JASON LEE/ Primary Examiner.Art Unit 2438 (Primary Examiner)	01/24/2017 (Date)	O.G. Print Claim(s) 1	O.G. Print Figure 1

U.S. Patent and Trademark Office

Part of Paper No. 20170124

Document Description: Issue Fee Payment (PTO-85B)

Issue Fee Transmittal Form

Application Number	Filing Date	First Named Inventor	Atty. Docket No.	Confirmation No.
14961645	07-Dec-2015	David Brown	10001-05305 US	4670

TITLE OF INVENTION :

Hybrid Device Having a Personal Digital Key and Receiver-Decoder Circuit and Methods of Use

Entity Status	Application Type	Art Unit	Class - Subclass	EXAMINER
Small	Utility under 35 USC 111(a)	2438	003000	JASON LEE

Issue Fee Due	Publication Due	Total Fee(s) Due	Date Due	Prev. Paid Fee
$480	$0	$480	08-May-2017	$0

1.Change of Correspondence Address and/or Indication Of Fee Address (37 CFR 1.33 & 1.363)

Current Correspondence Address:	Current Indicated Fee Address :
89194 Patent Law Works/Proxense Greg Sueoka 201 South Main Street, Suite 250 Salt Lake City UT 84111 UNITED STATES 8012589820 docketing@patentlawworks.net	
☐ Change of correspondence address requested, system generated AIA/122-EFS form attached	☐ Fee Address indication requested, system generated SB/47-EFS form attached

2.Entity Status

Change in Entity Status

○ Applicant certifying micro entity status; system generated Micro Entity certification form attached. See 37 CFR 1.29.
Note: Absent a valid certification of micro entity status, issue fee payment in the micro entity amount will not be accepted at the risk of application abandonment. If this box is checked, you will be prompted to choose a micro entity status on the gross income basis (37 CFR 1.29(a)) or the institution of higher education basis (37 CFR 1.29(d)), and make the applicable certification online.

◉ Applicant asserting small entity status. See 37 CFR 1.27.
Note: If the application was previously under micro entity status, checking this box will be taken to be a notification of loss of entitlement to micro entity status.

○ Applicant changing to regular undiscounted fee status.
Note: Checking this box will be taken to be a notification of loss of entitlement to small or micro entity status, as applicable.

3.The Following Fee(s) Are Submitted:

☒ Issue Fee	☐ I authorize USPTO to apply my previously paid issue fee to the current fees due
☐ Publication Fee	☐ The Director is hereby authorized to apply my previously paid issue fee to the current fee due and to charge deficient fees to Deposit Account Number _____
☐ Advance Order - # of copies _____	☐ If i**n addition to** the payment of the issue fee amount submitted with this form, there are any discrepancies in any amount(s) due, the Director is authorized to charge any deficiency, or credit any overpayment, to Deposit Account Number _____ . The **issue fee must be submitted** with this form. **If payment of the issue fee does not accompany this form, checking this box and providing a deposit account number will NOT be effective to satisfy full payment of the fee(s) due.**

4.Firm and/or Attorney Names To Be Printed

NOTE: If no name is listed, no name will be printed
For printing on the patent front page, list to be displayed as entered

1. PATENT LAW WORKS LLP
2.
3.

5.Assignee Name(s) and Residence Data To Be Printed

PLEASE NOTE: Unless an assignee is identified below, no assignee data will appear on the patent. If an assignee is identified below, the document has been filed for recordation as set forth in 37 CFR 3.11. Completion of this form is NOT a substitute for filing an assignment.

Name	City	State	Country	Category

6.Signature

I certify, in accordance with 37 CFR 1.4(d)(4) that I am an attorney or agent registered to practice before the Patent and Trademark Office who has filed and has been granted power of attorney in this application. I also certify that this Fee(s) Transmittal form is being transmitted to the USPTO via EFS-WEB on the date indicated below.

Signature	/Peter L. Norseth/	**Date**	05-08-2017
Name	Peter L. Norseth	**Registration Number**	64821

Electronic Patent Application Fee Transmittal

Application Number:	14961645
Filing Date:	07-Dec-2015
Title of Invention:	Hybrid Device Having a Personal Digital Key and Receiver-Decoder Circuit and Methods of Use
First Named Inventor/Applicant Name:	David L. Brown
Filer:	Peter L. Norseth
Attorney Docket Number:	10001-05305 US

Filed as Small Entity

Filing Fees for Utility under 35 USC 111(a)

Description	Fee Code	Quantity	Amount	Sub-Total in USD($)
Basic Filing:				
UTILITY APPL ISSUE FEE	2501	1	480	480
PUBL. FEE- EARLY, VOLUNTARY, OR NORMAL	1504	1	0	0
Pages:				
Claims:				
Miscellaneous-Filing:				
Petition:				
Patent-Appeals-and-Interference:				

Description	Fee Code	Quantity	Amount	Sub-Total in USD($)
Post-Allowance-and-Post-Issuance:				
Extension-of-Time:				
Miscellaneous:				
		Total in USD ($)		**480**

Electronic Acknowledgement Receipt	
EFS ID:	29139500
Application Number:	14961645
International Application Number:	
Confirmation Number:	4670
Title of Invention:	Hybrid Device Having a Personal Digital Key and Receiver-Decoder Circuit and Methods of Use
First Named Inventor/Applicant Name:	David L. Brown
Customer Number:	89194
Filer:	Peter L. Norseth
Filer Authorized By:	
Attorney Docket Number:	10001-05305 US
Receipt Date:	08-MAY-2017
Filing Date:	07-DEC-2015
Time Stamp:	12:38:11
Application Type:	Utility under 35 USC 111(a)

Payment information:

Submitted with Payment	yes
Payment Type	CARD
Payment was successfully received in RAM	$480
RAM confirmation Number	050817INTEFSW12380900
Deposit Account	
Authorized User	
The Director of the USPTO is hereby authorized to charge indicated fees and credit any overpayment as follows:	

File Listing:

Document Number	Document Description	File Name	File Size(Bytes)/ Message Digest	Multi Part /.zip	Pages (if appl.)
1	Issue Fee Payment (PTO-85B)	Web85b.pdf	45354 e99d95f0488c15ca8f38784f1e71bc4bd00696fb	no	2
Warnings:					
Information:					
2	Fee Worksheet (SB06)	fee-info.pdf	32454 07afd325ee12b37e69d50a5d95bebd235b0d4cc9	no	2
Warnings:					
Information:					
		Total Files Size (in bytes):	77808		

This Acknowledgement Receipt evidences receipt on the noted date by the USPTO of the indicated documents, characterized by the applicant, and including page counts, where applicable. It serves as evidence of receipt similar to a Post Card, as described in MPEP 503.

New Applications Under 35 U.S.C. 111
If a new application is being filed and the application includes the necessary components for a filing date (see 37 CFR 1.53(b)-(d) and MPEP 506), a Filing Receipt (37 CFR 1.54) will be issued in due course and the date shown on this Acknowledgement Receipt will establish the filing date of the application.
National Stage of an International Application under 35 U.S.C. 371
If a timely submission to enter the national stage of an international application is compliant with the conditions of 35 U.S.C. 371 and other applicable requirements a Form PCT/DO/EO/903 indicating acceptance of the application as a national stage submission under 35 U.S.C. 371 will be issued in addition to the Filing Receipt, in due course.
New International Application Filed with the USPTO as a Receiving Office
If a new international application is being filed and the international application includes the necessary components for an international filing date (see PCT Article 11 and MPEP 1810), a Notification of the International Application Number and of the International Filing Date (Form PCT/RO/105) will be issued in due course, subject to prescriptions concerning national security, and the date shown on this Acknowledgement Receipt will establish the international filing date of the application.

PART B - FEE(S) TRANSMITTAL

Complete and send this form, together with applicable fee(s), to: Mail **Mail Stop ISSUE FEE**
Commissioner for Patents
P.O. Box 1450
Alexandria, Virginia 22313-1450
or Fax (571)-273-2885

IFW

INSTRUCTIONS: This form should be used for transmitting the ISSUE FEE and PUBLICATION FEE (if required). Blocks 1 through 5 should be completed where appropriate. All further correspondence including the Patent, advance orders and notification of maintenance fees will be mailed to the current correspondence address as indicated unless corrected below or directed otherwise in Block 1, by (a) specifying a new correspondence address; and/or (b) indicating a separate "FEE ADDRESS" for maintenance fee notifications.

CURRENT CORRESPONDENCE ADDRESS (Note: Use Block 1 for any change of address)

89194 7590 02/07/2017
Patent Law Works/Proxense
Greg Sueoka
201 South Main Street, Suite 250
Salt Lake City, UT 84111

OPAP AKINA-15 MAY 17 2017 PATENT & TRADEMARK OFFICE

Note: A certificate of mailing can only be used for domestic mailings of the Fee(s) Transmittal. This certificate cannot be used for any other accompanying papers. Each additional paper, such as an assignment or formal drawing, must have its own certificate of mailing or transmission.

Certificate of Mailing or Transmission

I hereby certify that this Fee(s) Transmittal is being deposited with the United States Postal Service with sufficient postage for first class mail in an envelope addressed to the Mail Stop ISSUE FEE address above, or being facsimile transmitted to the USPTO (571) 273-2885, on the date indicated below.

(Depositor's name)
(Signature)
(Date)

APPLICATION NO.	FILING DATE	FIRST NAMED INVENTOR	ATTORNEY DOCKET NO.	CONFIRMATION NO.
14/961,645	12/07/2015	David L. Brown	10001-05305 US	4670

TITLE OF INVENTION: Hybrid Device Having a Personal Digital Key and Receiver-Decoder Circuit and Methods of Use

APPLN. TYPE	ENTITY STATUS	ISSUE FEE DUE	PUBLICATION FEE DUE	PREV. PAID ISSUE FEE	TOTAL FEE(S) DUE	DATE DUE
nonprovisional	SMALL	$480	$0	$0	$480	05/06/2017

The PTO did not receive the following listed item(s) LC Form

EXAMINER	ART UNIT	CLASS-SUBCLASS
LEE, JASON T	2438	726-003000

1. Change of correspondence address or indication of "Fee Address" (37 CFR 1.363).
- ☐ Change of correspondence address (or Change of Correspondence Address form PTO/SB/122) attached.
- ☐ "Fee Address" indication (or "Fee Address" Indication form PTO/SB/47; Rev 03-02 or more recent) attached. **Use of a Customer Number is required.**

2. For printing on the patent front page, list
(1) The names of up to 3 registered patent attorneys or agents OR, alternatively,
(2) The name of a single firm (having as a member a registered attorney or agent) and the names of up to 2 registered patent attorneys or agents. If no name is listed, no name will be printed.

1 Patent Law Works LLP
2
3

3. ASSIGNEE NAME AND RESIDENCE DATA TO BE PRINTED ON THE PATENT (print or type)

PLEASE NOTE: Unless an assignee is identified below, no assignee data will appear on the patent. If an assignee is identified below, the document has been filed for recordation as set forth in 37 CFR 3.11. Completion of this form is NOT a substitute for filing an assignment.

(A) NAME OF ASSIGNEE: Proxense, LLC

(B) RESIDENCE: (CITY and STATE OR COUNTRY): Bend, OR

Please check the appropriate assignee category or categories (will not be printed on the patent): ☐ Individual ☒ Corporation or other private group entity ☐ Government

4a. The following fee(s) are submitted:
- ☒ Issue Fee previously paid on 5/8/2017
- ☐ Publication Fee (No small entity discount permitted)
- ☐ Advance Order - # of Copies

4b. Payment of Fee(s): **(Please first reapply any previously paid issue fee shown above)**
- ☐ A check is enclosed.
- ☒ Payment by credit card. ~~[illegible]~~
- ☐ The director is hereby authorized to charge the required fee(s), any deficiency, or credits any overpayment, to Deposit Account Number ..... (enclose an extra copy of this form).

5. **Change in Entity Status** (from status indicated above)
- ☐ Applicant certifying micro entity status. See 37 CFR 1.29 — NOTE: Absent a valid certification of Micro Entity Status (see forms PTO/SB/15A and 15B), issue fee payment in the micro entity amount will not be accepted at the risk of application abandonment.
- ☐ Applicant asserting small entity status. See 37 CFR 1.27 — NOTE: If the application was previously under micro entity status, checking this box will be taken to be a notification of loss of entitlement to micro entity status.
- ☐ Applicant changing to regular undiscounted fee status. — NOTE: Checking this box will be taken to be a notification of loss of entitlement to small or micro entity status, as applicable.

NOTE: This form must be signed in accordance with 37 CFR 1.31 and 1.33. See 37 CFR 1.4 for signature requirements and certifications.

Authorized Signature /Peter L. Norseth/ Date 2017-05-17

Typed or printed name Peter L. Norseth Registration No. 64,821

PTOL-85 Part B (10-13) Approved for use through 10/31/2013. OMB 0651-0033 U.S. Patent and Trademark Office; U.S. DEPARTMENT OF COMMERCE

PART B - FEE(S) TRANSMITTAL

Complete and send this form, together with applicable fee(s), to: Mail **Mail Stop ISSUE FEE**
Commissioner for Patents
P.O. Box 1450
Alexandria, Virginia 22313-1450
or Fax (571)-273-2885

INSTRUCTIONS: This form should be used for transmitting the ISSUE FEE and PUBLICATION FEE (if required). Blocks 1 through 5 should be completed where appropriate. All further correspondence including the Patent, advance orders and notification of maintenance fees will be mailed to the current correspondence address as indicated unless corrected below or directed otherwise in Block 1, by (a) specifying a new correspondence address; and/or (b) indicating a separate "FEE ADDRESS" for maintenance fee notifications.

CURRENT CORRESPONDENCE ADDRESS (Note: Use Block 1 for any change of address)

89194 7590 02/07/2017
Patent Law Works/Proxense
Greg Sueoka
201 South Main Street, Suite 250
Salt Lake City, UT 84111

Note: A certificate of mailing can only be used for domestic mailings of the Fee(s) Transmittal. This certificate cannot be used for any other accompanying papers. Each additional paper, such as an assignment or formal drawing, must have its own certificate of mailing or transmission.

Certificate of Mailing or Transmission
I hereby certify that this Fee(s) Transmittal is being deposited with the United States Postal Service with sufficient postage for first class mail in an envelope addressed to the Mail Stop ISSUE FEE address above, or being facsimile transmitted to the USPTO (571) 273-2885, on the date indicated below.

(Depositor's name)
(Signature)
(Date)

APPLICATION NO.	FILING DATE	FIRST NAMED INVENTOR	ATTORNEY DOCKET NO.	CONFIRMATION NO.
14/961,645	12/07/2015	David L. Brown	10001-05305 US	4670

TITLE OF INVENTION: Hybrid Device Having a Personal Digital Key and Receiver-Decoder Circuit and Methods of Use

APPLN. TYPE	ENTITY STATUS	ISSUE FEE DUE	PUBLICATION FEE DUE	PREV. PAID ISSUE FEE	TOTAL FEE(S) DUE	DATE DUE
nonprovisional	SMALL	$480	$0	$0	$480	05/08/2017

EXAMINER	ART UNIT	CLASS-SUBCLASS
LEE, JASON T	2438	726-003000

1. Change of correspondence address or indication of "Fee Address" (37 CFR 1.363).
- ☐ Change of correspondence address (or Change of Correspondence Address form PTO/SB/122) attached.
- ☐ "Fee Address" indication (or "Fee Address" Indication form PTO/SB/47; Rev 03-02 or more recent) attached. **Use of a Customer Number is required.**

2. For printing on the patent front page, list
(1) The names of up to 3 registered patent attorneys or agents OR, alternatively,
(2) The name of a single firm (having as a member a registered attorney or agent) and the names of up to 2 registered patent attorneys or agents. If no name is listed, no name will be printed.

1 Patent Law Works LLP
2
3

3. ASSIGNEE NAME AND RESIDENCE DATA TO BE PRINTED ON THE PATENT (print or type)

PLEASE NOTE: Unless an assignee is identified below, no assignee data will appear on the patent. If an assignee is identified below, the document has been filed for recordation as set forth in 37 CFR 3.11. Completion of this form is NOT a substitute for filing an assignment.

(A) NAME OF ASSIGNEE: Proxense, LLC
(B) RESIDENCE: (CITY and STATE OR COUNTRY): Bend, OR

Please check the appropriate assignee category or categories (will not be printed on the patent): ☐ Individual ☒ Corporation or other private group entity ☐ Government

4a. The following fee(s) are submitted:
- ☒ Issue Fee previously paid on 5/8/2017
- ☐ Publication Fee (No small entity discount permitted)
- ☐ Advance Order - # of Copies _____

4b. Payment of Fee(s): **(Please first reapply any previously paid issue fee shown above)**
- ☐ A check is enclosed.
- ☒ Payment by credit card. ~~XXXXXXXXXXXXXXXX~~
- ☐ The director is hereby authorized to charge the required fee(s), any deficiency, or credits any overpayment, to Deposit Account Number _____ (enclose an extra copy of this form).

5. **Change in Entity Status** (from status indicated above)
- ☐ Applicant certifying micro entity status. See 37 CFR 1.29 — NOTE: Absent a valid certification of Micro Entity Status (see forms PTO/SB/15A and 15B), issue fee payment in the micro entity amount will not be accepted at the risk of application abandonment.
- ☐ Applicant asserting small entity status. See 37 CFR 1.27 — NOTE: If the application was previously under micro entity status, checking this box will be taken to be a notification of loss of entitlement to micro entity status.
- ☐ Applicant changing to regular undiscounted fee status. — NOTE: Checking this box will be taken to be a notification of loss of entitlement to small or micro entity status, as applicable.

NOTE: This form must be signed in accordance with 37 CFR 1.31 and 1.33. See 37 CFR 1.4 for signature requirements and certifications.

Authorized Signature /Peter L. Norseth/ Date 2017-05-17
Typed or printed name Peter L. Norseth Registration No. 64,821

Electronic Acknowledgement Receipt

EFS ID:	29240085
Application Number:	14961645
International Application Number:	
Confirmation Number:	4670
Title of Invention:	Hybrid Device Having a Personal Digital Key and Receiver-Decoder Circuit and Methods of Use
First Named Inventor/Applicant Name:	David L. Brown
Customer Number:	89194
Filer:	Peter L. Norseth
Filer Authorized By:	
Attorney Docket Number:	10001-05305 US
Receipt Date:	17-MAY-2017
Filing Date:	07-DEC-2015
Time Stamp:	23:07:16
Application Type:	Utility under 35 USC 111(a)

Payment information:

Submitted with Payment	no

File Listing:

Document Number	Document Description	File Name	File Size(Bytes)/ Message Digest	Multi Part /.zip	Pages (if appl.)
1	Transmittal Letter	05305US2017-05-17-SubmissionofReplacementIssueFeeTransmittal.pdf	20613 42fc5ddb456fc9fb4134c3cc16e2a4a6c4b439085	no	2

Warnings:

Information:					
2	Issue Fee Payment (PTO-85B)	05305US2017-05-17-RevisedIssueFeeTransmittal.pdf	177208 7c73648040b116795371b1590fff516889cbdb3b	no	1
Warnings:					
Information:					
			Total Files Size (in bytes):	197821	

This Acknowledgement Receipt evidences receipt on the noted date by the USPTO of the indicated documents, characterized by the applicant, and including page counts, where applicable. It serves as evidence of receipt similar to a Post Card, as described in MPEP 503.

New Applications Under 35 U.S.C. 111
If a new application is being filed and the application includes the necessary components for a filing date (see 37 CFR 1.53(b)-(d) and MPEP 506), a Filing Receipt (37 CFR 1.54) will be issued in due course and the date shown on this Acknowledgement Receipt will establish the filing date of the application.
National Stage of an International Application under 35 U.S.C. 371
If a timely submission to enter the national stage of an international application is compliant with the conditions of 35 U.S.C. 371 and other applicable requirements a Form PCT/DO/EO/903 indicating acceptance of the application as a national stage submission under 35 U.S.C. 371 will be issued in addition to the Filing Receipt, in due course.
New International Application Filed with the USPTO as a Receiving Office
If a new international application is being filed and the international application includes the necessary components for an international filing date (see PCT Article 11 and MPEP 1810), a Notification of the International Application Number and of the International Filing Date (Form PCT/RO/105) will be issued in due course, subject to prescriptions concerning national security, and the date shown on this Acknowledgement Receipt will establish the international filing date of the application.

IN THE UNITED STATES
PATENT AND TRADEMARK OFFICE

FIRST INVENTOR:	David L. Brown
APPLICATION NO:	14/961,645
FILING DATE:	December 7, 2015
TITLE:	Hybrid Device Having a Personal Digital Key and Receiver-Decoder Circuit and Methods of Use
EXAMINER:	Jason T. Lee
GROUP ART UNIT:	2438
ATTY. DKT. NO:	10001-05305 US
CONFIRMATION NO:	4670

CERTIFICATE OF EFS-WEB TRANSMISSION

Pursuant to 240 OG 45 and the Legal Framework For EFS-Web, I hereby certify that this follow-on correspondence is being officially submitted through the USPTO EFS-Web system from the Mountain Time Zone of the United States on the local date shown below:

Dated: May 17, 2017 By: /Peter L. Norseth/

Peter L. Norseth, Reg. No. 64,821

COMMISSIONER FOR PATENTS
P.O. BOX 1450
ALEXANDRIA, VA 22313-1450

SUBMISSION OF REPLACEMENT ISSUE FEE TRANSMITTAL (PTOL-85B)

Responsive to the Notice of Allowance mailed on February 7, 2017, the Issue Fee having been paid on May 8, 2017, via electronical filling via EFS-Web, Applicants are submitting herewith a replacement Issue Fee Transmittal (Form PTOL-85 Part B) as the Assignee was inadvertently omitted from the Form PTOL/85-EFS filed on May 8, 2017. Please update the Assignee Name and Residence Data to include the Name of Assignee as "Proxense, LLC" and the Residence as "Bend, OR", as indicated on the attached replacement Issue Fee Transmittal form (PTOL-85 Part B), to ensure that the Assignee is listed on the cover of the printed patent.

Favorable consideration is respectfully requested. If the Office believes that direct contact with Applicants' attorney will assist with this matter, the Office is encouraged to contact the undersigned as indicated below.

Respectfully submitted,

Dated: May 17, 2017 By: /Peter L. Norseth/

Peter L. Norseth, Reg. No. 64,821
Attorney for Applicant
PATENT LAW WORKS LLP
201 South Main Street, Suite 250
Salt Lake City, UT 84111
Tel.: (801) 258-9823
Fax: (801) 355-0160
Email: patents@patentlawworks.net

UNITED STATES PATENT AND TRADEMARK OFFICE

UNITED STATES DEPARTMENT OF COMMERCE
United States Patent and Trademark Office
Address: COMMISSIONER FOR PATENTS
P.O. Box 1450
Alexandria, Virginia 22313-1450
www.uspto.gov

APPLICATION NO.	ISSUE DATE	PATENT NO.	ATTORNEY DOCKET NO.	CONFIRMATION NO.
14/961,645	06/13/2017	9679289	10001-05305 US	4670

89194 7590 05/24/2017
Patent Law Works/Proxense
Greg Sueoka
201 South Main Street, Suite 250
Salt Lake City, UT 84111

ISSUE NOTIFICATION

The projected patent number and issue date are specified above.

Determination of Patent Term Adjustment under 35 U.S.C. 154 (b)
(application filed on or after May 29, 2000)

The Patent Term Adjustment is 0 day(s). Any patent to issue from the above-identified application will include an indication of the adjustment on the front page.

If a Continued Prosecution Application (CPA) was filed in the above-identified application, the filing date that determines Patent Term Adjustment is the filing date of the most recent CPA.

Applicant will be able to obtain more detailed information by accessing the Patent Application Information Retrieval (PAIR) WEB site (http://pair.uspto.gov).

Any questions regarding the Patent Term Extension or Adjustment determination should be directed to the Office of Patent Legal Administration at (571)-272-7702. Questions relating to issue and publication fee payments should be directed to the Application Assistance Unit (AAU) of the Office of Data Management (ODM) at (571)-272-4200.

APPLICANT(s) (Please see PAIR WEB site http://pair.uspto.gov for additional applicants):

Proxense, LLC, Bend, OR;
David L. Brown, Jupiter, FL;

The United States represents the largest, most dynamic marketplace in the world and is an unparalleled location for business investment, innovation, and commercialization of new technologies. The USA offers tremendous resources and advantages for those who invest and manufacture goods here. Through SelectUSA, our nation works to encourage and facilitate business investment. To learn more about why the USA is the best country in the world to develop technology, manufacture products, and grow your business, visit SelectUSA.gov.

IR103 (Rev. 10/09)

UNITED STATES PATENT AND TRADEMARK OFFICE

UNITED STATES DEPARTMENT OF COMMERCE
United States Patent and Trademark Office
Address: COMMISSIONER FOR PATENTS
P.O. Box 1450
Alexandria, Virginia 22313-1450
www.uspto.gov

APPLICATION NUMBER	FILING OR 371(C) DATE	FIRST NAMED APPLICANT	ATTY.DOCKET NO./TITLE	REQUEST ID
14/961,645	12/07/2015	David L. Brown	10001-05305 US	158019

Acknowledgement of Loss of Entitlement to Entity Status Discount

The entity status change request below filed through Private PAIR on 02/03/2022 has been accepted.

CERTIFICATIONS:

Change of Entity Status:

☒ Applicant changing to regular undiscounted fee status.
NOTE: Checking this box will be taken to be notification of loss of entitlement to small or micro entity status, as applicable.

This portion must be completed by the signatory or signatories making the entity status change in accordance with 37 CFR 1.4(d)(4).

Signature:	/Greg T. Sueoka/
Name:	Greg T. Sueoka
Registration Number:	33800

IN THE UNITED STATES
PATENT AND TRADEMARK OFFICE

FIRST INVENTOR:	David L. Brown
APPLICATION NO:	14/961,645
FILING DATE:	December 7, 2015
TITLE:	Hybrid Device Having a Personal Digital Key and Receiver-Decoder Circuit and Methods of Use
EXAMINER:	Jason T. Lee
GROUP ART UNIT:	2438
ATTY. DKT. NO:	10001-05305 US
CONFIRMATION NO:	4670

CERTIFICATE OF EFS-WEB TRANSMISSION UNDER 37 CFR § 1.8
I hereby certify that this correspondence is being transmitted via the U.S. Patent and Trademark Office electronic filing system (EFS-Web) to the USPTO on the date below.
Date: February 28, 2022 By: /Greg T. Sueoka/
Greg T. Sueoka, Reg. No. 33,800

MAIL STOP 16
COMMISSIONER FOR PATENTS
P.O. BOX 1450
ALEXANDRIA, VA 22313-1450

NOTIFICATION OF LOSS OF SMALL ENTITY STATUS UNDER 37 CFR 1.27(g)(2) AND PAYMENT OF DEFICIENCY IN FEES

Sir/Madam:

This communication hereby notifies the United States Patent and Trademark Office that small entity status is not applicable for the above-identified patent application. The undersigned was made aware of the above-identified property having been licensed to a large entity since November 20, 2019. The undersigned is hereby taking action to rectify the situation and the pay

the fees associated with this application as a large entity. The amount of additional fees to be paid as a large entity are as follows:

Date Paid	Fee Code	Description	Amount Paid	Undiscounted Fee (Code)	Amount Owed
12-07-2020	2551	For maintaining an original or any reissue patent, due at 3.5 years	$1000	$2000 (1551)	$1000
				Total Amount Owed:	$1000

The Director is hereby authorized to charge the above-identified fees totaling $1000, and any additional fees which may be required, including any petition fees, or credit any overpayment to Deposit Account No. 603148.

Respectfully submitted,

PROXENSE, LLC

Dated: February 28, 2022 By: /Greg T. Sueoka/

Greg T. Sueoka, Reg. No. 33,800
Attorney for Applicant
PATENT LAW WORKS LLP
310 East 4500 South, Suite 400
Salt Lake City, UT 84107
Tel.: (801) 258-9821
Fax: (801) 355-0160
Email: gsueoka@patentlawworks.net

GTS/kkt/kdl

Electronic Acknowledgement Receipt

EFS ID:	45099156
Application Number:	14961645
International Application Number:	
Confirmation Number:	4670
Title of Invention:	Hybrid Device Having a Personal Digital Key and Receiver-Decoder Circuit and Methods of Use
First Named Inventor/Applicant Name:	David L. Brown
Customer Number:	89194
Filer:	Greg T. Sueoka
Filer Authorized By:	
Attorney Docket Number:	10001-05305 US
Receipt Date:	28-FEB-2022
Filing Date:	07-DEC-2015
Time Stamp:	11:57:09
Application Type:	Utility under 35 USC 111(a)

Payment information:

Submitted with Payment	no

File Listing:

Document Number	Document Description	File Name	File Size(Bytes)/ Message Digest	Multi Part /.zip	Pages (if appl.)
1	Petition for review by the Office of Petitions	05305US_20220228_NotificationofLossofSmallEntityStatus.pdf	25550 a7ebd35792905f433f3305d217afa14c1adf8075	no	2

Warnings:

Information:	
Total Files Size (in bytes):	25550

This Acknowledgement Receipt evidences receipt on the noted date by the USPTO of the indicated documents, characterized by the applicant, and including page counts, where applicable. It serves as evidence of receipt similar to a Post Card, as described in MPEP 503.

New Applications Under 35 U.S.C. 111
If a new application is being filed and the application includes the necessary components for a filing date (see 37 CFR 1.53(b)-(d) and MPEP 506), a Filing Receipt (37 CFR 1.54) will be issued in due course and the date shown on this Acknowledgement Receipt will establish the filing date of the application.
National Stage of an International Application under 35 U.S.C. 371
If a timely submission to enter the national stage of an international application is compliant with the conditions of 35 U.S.C. 371 and other applicable requirements a Form PCT/DO/EO/903 indicating acceptance of the application as a national stage submission under 35 U.S.C. 371 will be issued in addition to the Filing Receipt, in due course.
New International Application Filed with the USPTO as a Receiving Office
If a new international application is being filed and the international application includes the necessary components for an international filing date (see PCT Article 11 and MPEP 1810), a Notification of the International Application Number and of the International Filing Date (Form PCT/RO/105) will be issued in due course, subject to prescriptions concerning national security, and the date shown on this Acknowledgement Receipt will establish the international filing date of the application.

UNITED STATES PATENT AND TRADEMARK OFFICE

UNITED STATES DEPARTMENT OF COMMERCE
United States Patent and Trademark Office
Address: COMMISSIONER FOR PATENTS
P.O. Box 1450
Alexandria, Virginia 22313-1450
www.uspto.gov

APPLICATION NO.	FILING DATE	FIRST NAMED INVENTOR	ATTORNEY DOCKET NO.	CONFIRMATION NO.
14/961,645	12/07/2015	David L. Brown	10001-05305 US	4670

89194 7590 08/08/2022
Patent Law Works/Proxense
Greg Sueoka
310 East 4500 South, Suite 400
Salt Lake City, UT 84107

EXAMINER
LEE, JASON T

ART UNIT	PAPER NUMBER
2438	

NOTIFICATION DATE	DELIVERY MODE
08/08/2022	ELECTRONIC

Please find below and/or attached an Office communication concerning this application or proceeding.

The time period for reply, if any, is set in the attached communication.

Notice of the Office communication was sent electronically on above-indicated "Notification Date" to the following e-mail address(es):

docketing@patentlawworks.net
patents@patentlawworks.net

PTOL-90A (Rev. 04/07)

UNITED STATES PATENT AND TRADEMARK OFFICE

Commissioner for Patents
United States Patent and Trademark Office
P.O. Box 1450
Alexandria, VA 22313-1450
www.uspto.gov

In re Patent No.: 9,679,289	:	
Issue Date: June 13, 2017	:	
Application No.: 14/961,645	:	NOTICE
Filed: December 07, 2015	:	
Attorney Docket No.: 10001-05305 US	:	

This is a notice regarding the request for acceptance of a fee deficiency submission under 37 CFR 1.28(c) filed February 28, 2022.

The Office no longer investigates or rejects original or reissue applications under 37 CFR 1.56. **1098 Off. Gaz. Pat. Office 502 (January 3, 1989)**. Therefore, nothing in this Notice is intended to imply that an investigation was done.

The fee deficiency submission under 37 CFR 1.28(c) is hereby **ACCEPTED**.

This application is no longer entitled to small entity status. Accordingly, all future fees paid in this application must be paid at the undiscounted rate.

Inquiries related to this communication should be directed to Dale Hall, Paralegal Specialist at (571) 272-3586.

/Dale A. Hall/
Paralegal Specialist, OPET